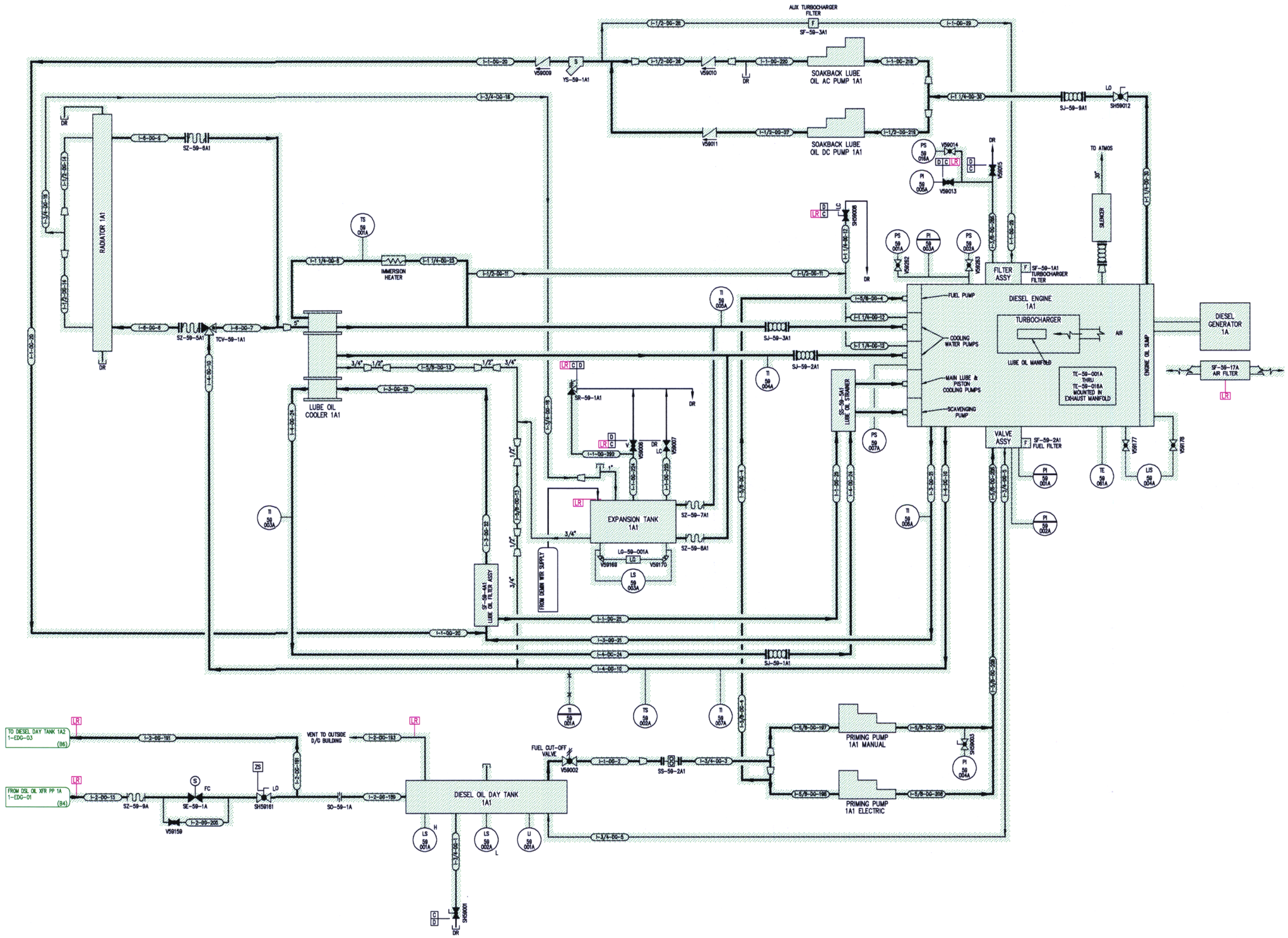


D-025

NOTES:

1. ALL SAFETY-RELATED PIPING AND ASSOCIATED COMPONENTS DEPICTED ON THIS DRAWING ARE WITHIN THE SCOPE OF LICENSE RENEWAL UNLESS NOTED OTHERWISE.
2. FOR GENERAL NOTES & LEGEND SEE DRAWING NO. 1-NOTES-01.

FLORIDA POWER & LIGHT
ST. LUCIE NUCLEAR UNIT 1

EMERGENCY
DIESEL GENERATOR

LICENSE RENEWAL BOUNDARY DRAWING

| DRAWING NUMBER | REVISION |
|---|---|
| 1-EDG-02 | 0 |

FPL

1-EDG-02