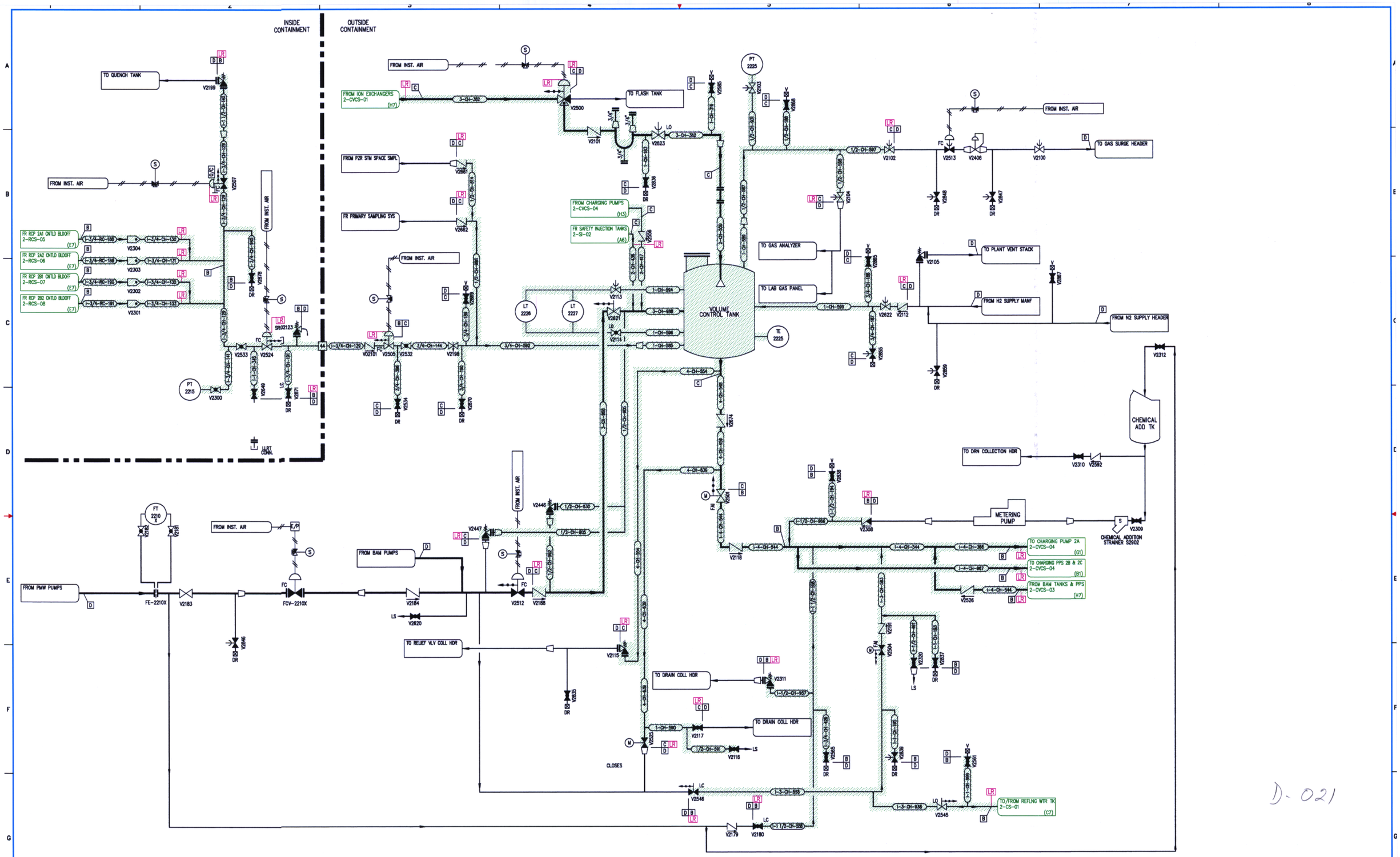


D-021

NOTES:

1. FOR GENERAL NOTES & LEGEND SEE DRAWING NO. 2-NOTES-01.

FLORIDA POWER & LIGHT
ST. LUCIE NUCLEAR UNIT 2

# CHEMICAL AND VOLUME CONTROL

LICENSE RENEWAL BOUNDARY DRAWING

| DRAWING NUMBER | REVISION |
|---|---|
| 2-CVCS-02 | 0 |

FPL

2CVCS02.DWG