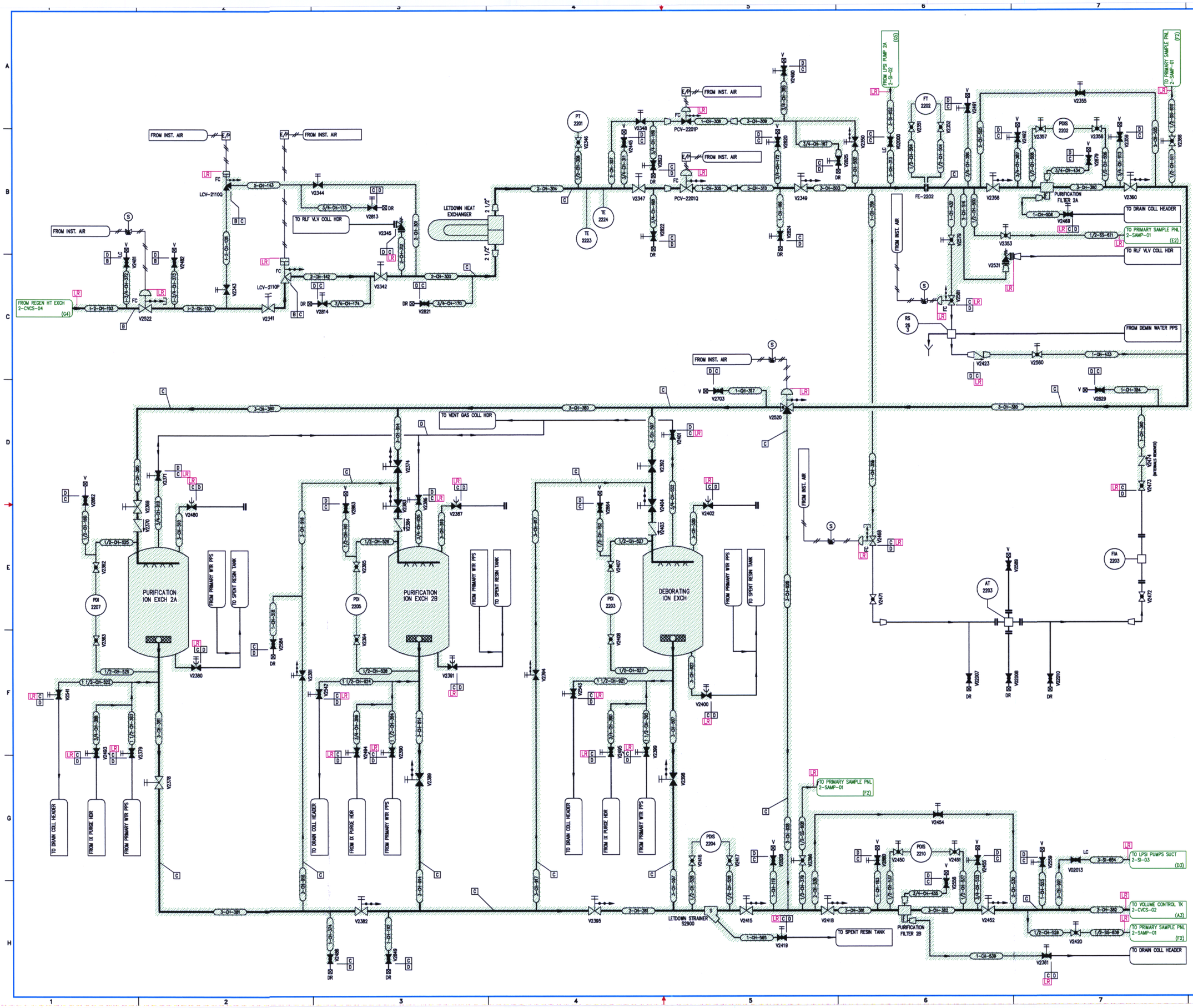

D-020

NOTES:

1. FOR GENERAL NOTES & LEGEND SEE DRAWING NO. 2-NOTES-01.

FLORIDA POWER & LIGHT
ST. LUCIE NUCLEAR UNIT 2

CHEMICAL AND VOLUME CONTROL

LICENSE RENEWAL BOUNDARY DRAWING

DRAWING NUMBER	REVISION
2-CVCS-01	0

FPL

2CVCS.DWG