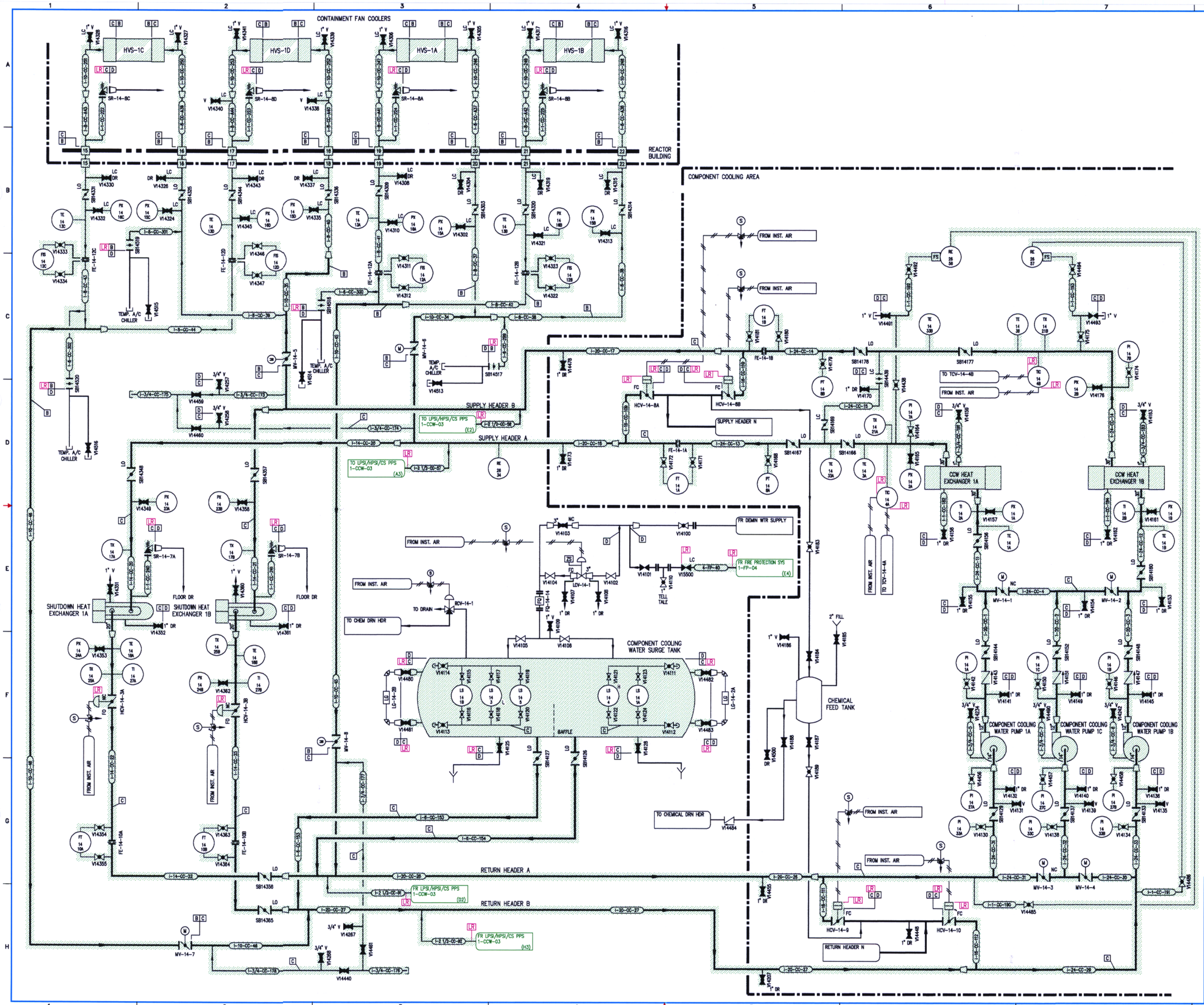

D-007

NOTES:

1. FOR GENERAL NOTES & LEGEND SEE DRAWING NO. 1-NOTES-01.

FLORIDA POWER & LIGHT
ST. LUCIE NUCLEAR UNIT 1

COMPONENT COOLING WATER

LICENSE RENEWAL BOUNDARY DRAWING

DRAWING NUMBER	REVISION
1-CCW-01	0

FPL

1CCW01.DWG