Southern Nuclear
Operating Company, Inc.
Post Office Drawer 470
Ashford, Alabama 36312

Date: November 5, 2001

SOUTHERN COMPANY
Energy to Serve Your World℠

FNP-127-EP-DC

Director, Office of NRC
Att: Document Control Desk
C/O Jim McKnight
US Nuclear Regulatory Commission
Washington, DC 20555

Dear Sir:

Attached is Revision 48 of FNP-0-EIP-9.0 – Emergency Classification and Actions
Also Attached is Revision 36 of FNP-0-EP-0.0 – The Emergency Plan for Farley Nuclear Plant.

Please replace your copies with the attached revised copies.

If you have any questions, please call me at 334-988-5256 Extension 3439.

Sincerely,

Donnie Hardy

Donnie Hardy
Document Control Supervisor

A045

SHARED

FARLEY NUCLEAR PLANT

EMERGENCY PLAN IMPLEMENTING PROCEDURE 9.0

FNP-0-EIP-9.0

SAFETY RELATED

EMERGENCY CLASSIFICATION AND ACTIONS

PROCEDURE USAGE REQUIREMENTS PER FNP-0-AP-6	SECTIONS
Continuous Use	
Reference Use	ALL
Information Use	

Approved:

Nuclear Plant General Manager

Date Issued 11-2-01

UNCONTROLLED COPY
CAUTION: This copy is not maintained
Current. Do not use in a Safety Related Activity.

TABLE OF CONTENTS

Procedure Contains	Number of Pages
Body	7
Attachment 1	5
Guideline 1	11
Guideline 2	11
Guideline 3	11
Guideline 4	10
Table 1	1
Table 2	1
Table 3	1
Table 4	1
Figure 1	1
Figure 2	1
Figure 3	1
Figure 4	0
Figure 5	0
Figure 6	2
Figure 7	1
Figure 8	1

EMERGENCY CLASSIFICATION AND ACTIONS

TABLE OF CONTENTS

Section	Title	Page
1.0	Purpose	1
2.0	References	1
3.0	General	1
4.0	Classify Emergency	3
5.0	Perform Actions and Initial Notification	6
6.0	Continue Reassessment	6
7.0	Downgrade or Closeout	7
Attachment 1	Emergency Notification Form Guidance	
Guideline 1	General Emergency	
Guideline 2	Site Area Emergency	
Guideline 3	Alert	
Guideline 4	Notification of Unusual Event	
Table 1	References	
Table 2	Emergency Facility Activation	
Table 3	Considerations for Emergency Classifications Based on Security Events	
Table 4	Information Likely to be Requested by the NRC if an Emergency is Declared	
Figure 1	10 Mile Emergency Planning Zone	
Figure 2	Event (Flowpath)	
Figure 3	Telecopy Group Dial Numbers	

EMERGENCY CLASSIFICATION AND ACTIONS

TABLE OF CONTENTS

Figure 4	Deleted
Figure 5	Deleted
Figure 6 (Side 1)	Emergency Notification
Figure 6 (Side 2)	Notification Means
Figure 7	Emergency Notification Continuation Sheet
Figure 8	Dose Equivalent Iodine Estimation

EMERGENCY CLASSIFICATION AND ACTIONS

1.0 Purpose

The purpose of this procedure is to provide a method for rapid projection of estimated offsite radiation exposures as a result of a release of radioactive material, to provide the basis for classifying emergencies based on plant conditions and automatic dose calculations, to provide guidance for determining protective action recommendations, to provide guidelines for actions, and for notification guidance.

2.0 References

See Table 1.

3.0 General:

3.1 This procedure provides criteria for the classification of an emergency based on plant status and radiological hazards (i.e., direct radiation and inhalation hazards which may result from the passage of a cloud of radioactive material released from the plant).

3.2 Assessment of radioactive liquid releases will be made using the offsite Dose Calculation Manual.

3.3 Release time is defined as follows:

3.3.1 EDCM Calculations: The period of time from the most recent projection to the estimated time of release termination.

3.3.2 ODCM Calculations: The period of the release in which Technical Specification limits are exceeded.

3.4 Definitions:

TOTAL EFFECTIVE DOSE EQUIVALENT (TEDE)
means the sum of the deep dose equivalent (for external exposures) and the committed effective dose equivalent (for internal exposures).

DEEP DOSE EQUIVALENT (DDE)
which applies to external whole body exposure, is the dose equivalent at a tissue depth of 1 cm.

COMMITTED DOSE EQUIVALENT (CDE)
means the dose equivalent to organs or tissues of reference that will be received from an intake of radioactive material by an individual during the 50-year period following the intake.

COMMITTED EFFECTIVE DOSE EQUIVALENT (CEDE)
is the sum of the products of the weighting factors applicable to each of the body organs or tissues that are irradiated and the committed dose equivalent to these organs of tissues.

3.5 Protective action recommendation guidance is provided to aid in establishing protective action recommendations. The Emergency Director will exercise his own judgment in recommending protective actions to offsite agencies.

3.6 If steam generator water level falls below the break point during a steam generator tube rupture, off-site dose rate may be significantly higher (up to 10 times) due to volatilization of iodine.

3.7 Initial Notification or upgrade should be made from the Control Room or TSC. It is not necessary to transfer the information to the EOF to make the upgrade notification. The EOF, if staffed, should be informed as soon as possible.

3.8 Communication guidance for making the initial verbal notification is on the Emergency Initial Notification Form, in the appropriate guideline.

3.9 Guidance for when the emergency response facilities should be manned and the level of manning required is included in Table 2. It is recommended that the TSC and the EOF be fully staffed initially at the ALERT level. If the full staff is not required, individuals can be released on a case-by-case basis.

3.10 At the NOUE level or below, it may be desirable to partially staff the TSC in order to relieve the Control Room staff of offsite communications and notifications. FNP-0-EIP-6.0 provides a listing of positions that should be considered for partial TSC activation.

3.11 EIP-6, Figure 3, provides a list of information that should be considered when updating plant staff over the public address system.

4.0 Classify emergency based on the most severe plant conditions OR projected off-site dose/dose rate conditions, WHICHEVER results in the higher emergency classification. Figure 2 provides a flowpath for dose assessment methods and plant conditions criteria.

4.1 Plant Conditions
While performing the remainder of step 4.1, have the Shift Radio Chemist (SRC) commence performing the calculations for dose assessment per step 4.2. Use the following guidelines to determine the highest indicated emergency classification based on plant conditions:

Guideline 1, Section I, General Emergency Classification Criteria

Guideline 2, Section I, Site Area Emergency Classification Criteria

Guideline 3, Section I, Alert Criteria

Guideline 4, Section I, NOUE Criteria

4.2 Dose Assessment

CAUTION: DOSE CALCULATIONS FROM EIP-9.1 OR EIP-9.3 ARE NOT TO BE USED TO DECLARE A NOUE OR ALERT SINCE EIP-9.1 AND EIP-9.3 ARE BASED ON EDCM METHODOLOGY, AND NOUE AND ALERT LIMITS ARE BASED ON ODCM METHODOLOGY.

NOTE: Due to the differences in the met data used for EDCM and ODCM calculations, the following sequence of step 4.2 substeps must be followed. The Top Down approach must be used for dose assessment.

NOTE: EDCM dose assessment can only be done from an ERDS terminal or a MIDAS terminal. The only location in the power block where these terminals are available is in the TSC.

NOTE: All of the step 4.2 substeps will normally be accomplished by the SRC with the exception of steps 4.2.8 and 4.2.11. Steps 4.2.8 and 4.2.11 must be performed by the Shift Supervisor, Operations Shift Superintendent, or Emergency Director.

4.2.1 For initial dose assessment from the TSC, proceed to step 4.2.4.

4.2.2 For dose assessment from the EOF or long term dose assessment from the TSC, go to EIP-9.3, PERSONNEL COMPUTER-AUTOMATED DOSE ASSESSMENT and perform dose assessment using the MIDAS program. Return to step 4.2.8 for evaluation of dose information and continue with step 4.2.9.

4.2.3 If the MIDAS program is inoperable, then for dose assessment from the EOF or from the TSC, go to EIP-9.1, AUTOMATED DOSE ASSESSMENT and perform dose assessment using the ARDA program to obtain dose information. Return to step 4.2.8 for evaluation of dose information and continue with step 4.2.9.

4.2.4 If the ARDA System is operable and has been automatically activated, then go to EIP-9.1, AUTOMATED DOSE ASSESSMENT and perform dose assessment using the ARDA program to obtain dose information. Return to step 4.2.8 for evaluation of dose information and continue with step 4.2.9.

4.2.5 If the ARDA System per EIP 9.1 is operable, has not automatically activated, and one of the following rad monitors has alarmed:

- R-29
- R-15C
- R-60 A, B, C, or D
- R-14
- R-21
- R-22

Then go to EIP-9.1, AUTOMATED DOSE ASSESSMENT, manually start ARDA and perform dose assessment using the ARDA program to obtain dose information. Return to step 4.2.8 for evaluation of dose information and continue with step 4.2.9.

4.2.6 <u>If</u> the ARDA system per EIP 9.1, AUTOMATED DOSE ASSESSMENT is NOT operable, <u>then</u> go to EIP-9.3, PERSONAL COMPUTER-AUTOMATED DOSE ASSESSMENT and perform dose assessment using the MIDAS program. Return to step 4.2.8 for evaluation of dose information and continue with step 4.2.9.

4.2.7 If the ARDA system per EIP 9.1 AUTOMATED DOSE ASSESSMENT is operable, has not automatically activated, and none of the alarms listed in step 4.2.5 have alarmed then go to EIP-9.5, EMERGENCY CLASSIFICATION BASED ON ODCM to perform dose assessment. Return to step 4.2.11 for evaluation of doserate information.

NOTE:	**Evaluating the dose assessment information in Step 4.2.8 must be performed by the Shift Supervisor, Operations Shift Superintendent, or Emergency Director in the Control Room or TSC, the DAD or Recovery Manager in the EOF.**

4.2.8 Using the dose information obtained from EIP-9.1 or EIP-9.3, determine the highest indicated emergency classification from the "High Effluent" criteria in Guideline 1, Section I, or Guideline 2, Section I.

NOTE:	**If a General Emergency or site area emergency is indicated in the following step, the Emergency Director should consider directing long term dose assessment be performed from the TSC per step 4.2.2.**

4.2.9 If a General Emergency or Site Area Emergency was indicated from step 4.2.8, then go to step 4.3.

4.2.10 If a General Emergency or Site Area Emergency was not indicated in step 4.2.8, then go to EIP-9.5, EMERGENCY CLASSIFICATION BASED ON ODCM. Return to step 4.2.11 for evaluation of doserate information.

NOTE:	**Evaluating the dose assessment information in Step 4.2.11 must be performed by the Shift Supervisor, Operations Shift Superintendent, or Emergency Director in the Control Room or TSC, the DAD or Recovery Manager in the EOF.**

4.2.11 Using the dose rate information obtained from EIP-9.5, determine the highest indicated emergency classification from the "High Effluent" criteria in Guideline 3, Section I, and Guideline 4, Section I.

4.3 Determine the correct emergency classification, declare the emergency at the time the classification was verified in the Guideline, determine PARs and make notifications.

4.3.1 Compare the emergency classifications determined from steps 4.1 and 4.2 to determine the highest required emergency classification and declare the emergency. Do not wait for dose assessment results from step 4.2 to classify the event if plant conditions require an initial classification or an upgrade classification. As soon as a criteria for classification has been met, the event should be classified by the Operations Shift Superintendent or ED and an upgrade can be done later if required.

4.3.2 Using section L of the guideline for the highest emergency classification determined in step 4.3.1, determine the required protective action recommendations.

4.3.3 Complete the initial notification form at the back of the guideline and perform required notifications.

5.0 Perform actions and initial notification to offsite authorities upon initial entry or upgrade into a classification using the applicable guideline:

Guideline 1, Section II - General Emergency

Guideline 2, Section II - Site Area Emergency

Guideline 3, Section II - Alert

Guideline 4, Section II - Notification of Unusual Event

6.0 Continue reassessment of emergency classification per step 4.0 or 7.0, as appropriate, and transmit follow-up message/periodic update message as follows:

6.1 Transmit Follow-up Messages:

6.1.1 Transmit a follow up message as soon as possible following an initial or upgrade notification. Refer to step 6.2 for time limits.

6.1.2 Use, if desired, EIP-8.3, Step 15, for guidance in completing and transmitting the "Emergency Message" for Follow Up/Periodic Update (Figure 6).

6.1.3 When performing dose assessment, transcribe dose information from the form being printed on a blank Figure 6 or use the form being printed. Fill in the remaining information. Transmit follow up message by telecopy.

NOTE: EFFORTS WILL BE MADE TO TRANSMIT FOLLOW-UP REPORTS EVERY HALF HOUR.

6.2 Transmit subsequent "Follow Up Message/Periodic Update Message" reports per one of the methods listed in steps 6.1.1 or 6.1.2.

6.2.1 At a minimum of once per hour. The hourly requirement may be waived while in a NOUE declaration, if this is agreed to by the state and local agencies.

6.2.2 Following a significant change in dose rate that does not require a change in emergency classification.

6.2.3 Following a significant change in plant conditions that does not require a change in emergency classification.

7.0 Downgrade or closeout an emergency classification after determining, through the use of the guidelines, that the current emergency classification is no longer required. FNP-0-EIP-28.0 will be used to downgrade or closeout an emergency class

ATTACHMENT 1

EMERGENCY NOTIFICATION FORM GUIDANCE

1.0 Emergency Notification Form Guidance is provided below. The guidance is provided for filling out the Emergency Notification Form (FIGURE 6). This attachment can be used as reference guidance when filling out the form or for training.

1.1 A **VERBAL NOTIFICATION** of a declared emergency or an upgrade to a higher level declared emergency shall be performed in accordance with Guidelines 1 through 4 using the appropriate Verbal Notification Form.

1.2 A **HARDCOPY MESSAGE** of a declared emergency or an upgrade to a higher level declared emergency shall be performed using Figure 6 This attachment is a REFERENCE to use as necessary for completing Figure 6. The hardcopy message is a backup to the verbal notification described above.

1.3 A **FOLLOW-UP MESSAGE** will be used to make periodic plant status updates using Figure 6. This attachment is a REFERENCE to use as necessary for. completing Figure 6.

NOTE: THE BOXES CAN BE INDICATED BY A CHECK, AN "X", OR BY FILLING OR BLACKENING IN.

Line 1
- Check A or B.
- Except for actual emergencies A should be checked in training and for drills/exercises
- Check C or D.
- C should be checked for Hardcopy Messages described in step 1.2 above.
- D should be checked for Follow-up Messages described in step 1.3 above. Note the single asterisk associated with box D. for Follow-up Messages
- The Hardcopy and Follow-up message numbers are sequential, starting with 001.

Line 2
- Specify Unit 1, 2, or both. If both is entered consider describing the least affected unit reactor status in line 7
- Reported by is the individual who filled out the form.

ATTACHMENT 1

Line 3

- Fill in the time/date of this message just prior to transmitting.
- Fill in an extension number that will be staffed so that the state and county agencies have a place to talk to someone that can help them. A Direct inward dial number may be entered. In the TSC (334) 814-4662 or (334) 814-4663, or in the EOF (334) 814-4654 or (334) 814-4655 are dedicated for call in by the states.
- Select TSC, EOF or fill in a separate fax number that will be staffed, so that the state and county agencies have a location where they can fax information if necessary

Line 4

- This line is not used at FNP. It remains on the form to maintain conformity with other state forms.

Line 5

- Check A, B, C or D (only one) as appropriate. Check no boxes if this is a termination.

Line 6

- Check A or B. Time is for the declaration checked in line 5 or the time of termination.. Termination should only be done after conversation with off-site authority per FNP-0-EIP-28.0. If this is a termination, go to line 16.

Line 7

- Provide a brief, concise summary of plant conditions that requires the classification and other pertinent information.
- Enter the classification criteria used in words; the criteria code may also be included.
- If more space is needed, check box E and use the continuation sheet.
- If any of the items in block A, B, C or D apply, check them as well.

Line 8

- Check A, B or C.
- A should be checked if mitigation efforts appear successful , progressing toward termination/recovery.
- B should be checked if escalation to a higher classification is unlikely based on current conditions.
- C should be checked if escalation to a higher emergency classification or PAR change is likely.
- Check D if RMTs have been dispatched off-site
- Check E if personnel not needed to support recovery efforts have been released from the site. This provides the state and county information as to who to expect to see in the 10 mile EPZ

Line 9

- Check A or B to provide information about the affected unit.
- If both units are affected provide the least affected unit information in line 7 and the most affected unit information here
- If A is checked complete the time that the reactor was shutdown
- If B is checked, provide the current reactor power from N41, 42, 43 or 44.

Line 10

- Check A, B, C or D (only one).
- Check A if the criteria for a (B) Potential Release, (C) Is Occurring or (D) Has Occurred has not been met
- If A is checked, go to line 14 to provide meteorological data. Off-site agencies still want line 14 information in order to know what zones might be affected. No information should be filled in for lines 11, 12 or 13.
- Check B for potential failures of the final barrier to the release of fission fragments. Examples of potential releases are the RCS and clad barriers that are known to be failed and containment pressure is above design value, or the clad and containment barriers are failed and a pressurizer safety valve is stuck with PRT pressure rising. For potential releases, do not put estimated or potential values for the release information in lines 11, 12, or 13, because there is no release in progress.
- If B is checked, go to line 14 to provide meteorological data. Off-site agencies still want line 14 information in order to know what zones might be affected. No information should be filled in for lines 11, 12 or 13.
- Check box C If an emergency release is occurring. An emergency release should be considered to exist if an abnormal increase in radiological release rate by a factor of 10 over and above normal operating levels has occurred. Normal operating levels are average release levels for steady-state operations (may be obtained from ERDS, RMDA, control room recording, or plant computer).
- If A Site Area Emergency or General Emergency has been declared and a release is in progress, complete the information in lines 11, 12 and 13 based on the values obtained from an EDCM calculation (MIDAS or ARDA)
- If a NOUE or an ALERT has been or can be declared based on the release in progress then provide the release information in line 7 as directed by step D of Guideline 3 or 4. Do not provide any information in lines 11, 12 or 13 except for checking 12D to indicate that the release is above Technical Specification limits
- Check Box D if a release that was large enough to require an emergency classification of NOUE or above to be declared had occurred but is now stopped.
- If EDCM dose assessment information has already been provided in lines 11, 12 and 13 in previous messages continue to provide this information.
- If a new estimate of projected off site dose is not available then do not provide data in lines 11 through 13, go directly to line 14.

Line 11

- For actual releases only, normally check A
- Mixed mode calculations are normally not done at FNP
- Fill in actual start/stop times for C, D, E and F as appropriate. It is not necessary to check the boxes when data is being entered into the blanks.

Line 12

- The ARDA and MIDAS programs provide release rate in µCuries/Sec. Check box A.
- For all emergency releases check C or D to indicate if release is above or below Technical Specification limits. Any release that can be used to declare a NOUE or above is above Technical Specification Limits and if no emergency can be declared it is below Technical Specification limits
- The data for completing blanks E, F, G and H on this line is available from the MIDAS or the ARDA printout.
- It not necessary to check the boxes when data is being entered into the blanks.

Line 13

- For all new dose assessment calculations that are to be reported, then check new and fill in Blanks C through K. Note that line 14 meteorological data must be the same data that was used in performing the new dose assessment calculation.
- If there has been no new dose assessment calculation performed since the last message, then check box B and leave all other line 13 blanks empty.
- Box B can also be checked to if the intent of the message is to report rapid changes in emergency status, plant conditions, meteorological conditions or changes in PARS without performing a new dose projection.
- In blank C fill in the length of time in hours that the release is expected to continue from the current time. Four hours should always be assumed if the actual time is unknown.
- The data for completing blanks D through K on this line is available from the MIDAS or the ARDA printout.
- It not necessary to check the boxes when data is being entered into the blanks.
- For ODCM calculations (for NOUE or Alert), do not enter dose information here. Place the dose information in the comments at line 7, along with the notes that are specified in the NOUE and Alert Guidelines if declaration is based on the ODCM.

Line 14

- Fill in the meteorological data required in A through D. Note that line 14 meteorological data must be the same data that was used in performing the dose assessment calculation information provided on line 12 and 13.
- When possible use 15 minute average data, available from the NR ERDS MIDAS page

Line 15

- Refer to Step L of the appropriate FNP-0-EIP-9.0 Guideline to determine appropriate Protective action Recommendations (PARs).
- If there are no protective action recommendations, check box A and proceed to step 16.
- Specific protective actions must be made for a general emergency.

Line 16

- "Approved by" should be the Emergency Director or Recovery Manager, with the current date and time.

GUIDELINE 1

GENERAL EMERGENCY

I. Criteria for Classification

The classification of General Emergency applies to those events which are in progress or have occurred which involve actual or imminent substantial core degradation or melting with potential loss of containment integrity. The potential for release of radioactive material for the General Emergency classification is more than 1000 Ci of I-131 equivalent or more than 10^6 Ci of Xe-133 equivalent.

The purpose of the declaration of a General Emergency is to:

(a) Initiate predetermined protective actions for the public.

(b) Provide continuous assessment of information from licensee and offsite measurement.

(c) Initiate additional measures as indicated by event releases or potential releases and,

(d) Provide current information for and consultation with offsite authorities and the public.

A General Emergency would be declared for any of the following:

1.0 HIGH EFFLUENT

Projected exposure at site boundary or for projected peak dose location within the plume for EDCM calculation:

G1.1 Greater than or equal to 1.0 REM (1000 MREM) TEDE exposure

OR

G1.2 Greater than or equal to 5.0 REM (5000 MREM) thyroid CDE exposure

GUIDELINE 1

GENERAL EMERGENCY

2.0 FISSION PRODUCT BARRIERS

G2.1 Loss of two of three fission product barriers with a potential loss of the third. The following describe indication of loss of these boundaries:

(a) Fuel cladding damage indicated by:

1. RCS activity > 300 μCi/gram dose equivalent I-131. Figure 8 may be used to help evaluate if Dose Equivalent I-131 (DEI) is > 300 μCi/gram.

OR

2. Loss of core geometry is indicated by ΔT between RCS wide range hot leg and cold leg temperature of > 64° F and core exit temperature (incore thermocouples) reading greater than 1200° F.

(b) Loss of primary coolant boundary as indicated by:

1. Containment pressure reaching 27 psig **AND**

2. High containment radiation (R-2, R-22 and R-12, reaching their alarm setpoint) **AND**,

3. High containment humidity.

(c) Loss or potential loss of containment integrity is indicated by:

1. Containment pressure greater than 54 psig, **OR**

2. A rapid decrease in containment pressure, **OR**

3. Failure of the containment isolation system resulting in a direct path from containment to the environment.

(d) Other plant conditions exist, from whatever source, that make release of large amounts of radioactivity in a short time period possible, such as any core melt situation.

GUIDELINE 1

GENERAL EMERGENCY

3.0 SECURITY/EVACUATION

G3.1 Loss of physical control of the facility. If the basis for declaring this emergency classification is based on security concerns then refer to table 3 prior to taking actions that will cause people to report to the site or change locations on site

GUIDELINE 1

GENERAL EMERGENCY

II. Emergency Director Actions

NOTE: THE OPERATIONS SHIFT SUPERINTENDENT SHALL PERFORM THE DUTIES OF THE EMERGENCY DIRECTOR UNTIL HIS ARRIVAL AND ASSUMPTION OF DUTIES.

NOTE: ACTIVATION OF THE TSC AND EOF STAFFS, PER STEPS E1 AND E2, SHOULD BE DONE IN PARALLEL WITH NOTIFICATION OF THE STATE AND LOCAL AGENCIES.

Initials

_____ A. If the Plant Emergency alarm has not already been activated, then announce over the public address system "All Plant Personnel Report to Designated Assembly Area," activate the PEA for 30 seconds and repeat the announcement.

_____ B. Announce the condition and give needed evacuation instructions over plant public address system.

NOTE: IF POSSIBLE AND TIME PERMITTING, DISCUSS WITH ALABAMA RADIATION CONTROL AND GEORGIA EMERGENCY MANAGEMENT AGENCY ABOUT THE PARs PRIOR TO ANNOUNCING THEM OVER THE ENN.

_____ C. Fill in the General Emergency Initial Notification Form (last two pages of this guideline), including developing protective action recommendations per step L. Take into account the zones and evacuation time estimates shown in Figure 1.

GUIDELINE 1

GENERAL EMERGENCY

NOTE: INITIAL NOTIFICATIONS WILL NORMALLY BE MADE BY THE SHIFT CLERK, BUT MAY BE MADE BY OPERATIONS STAFF, TSC STAFF OR OTHER QUALIFIED PERSON USING THE INITIAL NOTIFICATION FORM (LAST TWO PAGES OF THIS GUIDELINE).

NOTE: INITIAL AND UPGRADE CLASSIFICATIONS AND NOTIFICATIONS SHOULD BE PERFORMED BY THE CONTROL ROOM OR THE TSC STAFF, WITH THE EOF INFORMED AS SOON AS POSSIBLE.

D. Initial Notifications

_____1. Within 15 minutes of declaration, verbally notify the state and local agencies using the General Emergency Initial Notification Form (last two pages of this guideline).

_____2. Verify notifications complete and documented on the General Emergency Initial Notification Form (last two pages of this guideline).

E. Emergency Organization Notifications

NOTE: STEPS E1 AND E2, NOTIFYING THE TSC AND EOF STAFF, WILL NORMALLY BE ACCOMPLISHED BY HAVING THE SHIFT CLERK COORDINATE ACTIVATION OF THE COMMUNITY ALERT NETWORK (CAN) PER FNP-0-EIP-8.3, TABLE 2 AND STEP 11.

_____ 1. TSC Staff (full activation required)

_____ 2. EOF Staff (full activation required)

_____ 3. On-call Emergency Director

_____ 4. On-call Recovery Manager

_____ 5. Emergency Support Manager

_____ 6. Notify Security of Emergency, incoming personnel, access restrictions and to setup the EOF (pax 4611).

GUIDELINE 1

GENERAL EMERGENCY

F. Other Notifications

_____ 1. NRC (Perform immediately after state notification and within one hour of declaration per Figure 6, side 2).

_____ 2. Have Regulatory ERDS activated to transmit data to the NRC within one hour of the declaration of the emergency (EIP-8-3, step 10).

_____ 3. If personnel injury or fire is involved, refer to FNP-0-EIP-11.0 and 13.0 respectively for additional actions and EIP-8.0 steps 5.0 and 6.0 for additional notification requirements.

_____ 4. U.S. Army EOD group at Fort Benning, GA, if necessary.

_____ 5. Savannah River Operations Office, if necessary.

G. In Plant Protective Actions

_____ 1. Ensure personnel accountability per EIP-10.0.

_____ 2. Plan and initiate reentry's per EIP-14.0.

_____ 3. Ensure proper Control Room response.

_____ 4. Assign an individual to provide periodic plant status updates.

_____ 5. Assign an individual to maintain a log of important Emergency Director activities.

_____ 6. Assign an individual to keep a record of all off-site communications.

_____ 7. Determine what should be done with a unit that is not affected by the declared emergency. Consider the effect on the emergency unit, manpower utilization, plant and grid stability, and other relevant factors.

H. Off-Site Support

_____ 1. Ensure Radiation Monitoring teams have been dispatched per EIP-4.0.

_____ 2. Provide information to the Recovery Manager for use in press releases and recovery planning.

GUIDELINE 1

GENERAL EMERGENCY

I. Information to Off Site Authorities

____ 1. Provide periodic plant status updates, meteorological and dose estimates and release projections based on plant conditions and foreseeable contingencies.

J. Re-Assess plant conditions

____ 1. Continue to assess plant and radiological conditions to ensure the correct emergency classification is declared.

____ 2. If plant and radiological conditions no longer require the current emergency classification downgrade or close out the emergency class using FNP-0-EIP-28.0.

K. Long term staffing

____ 1. Within 8 hours, provide for full TSC and OSC reliefs.

____ 2. Within 16 hours, provide for 24 hour TSC and OSC coverage.

GUIDELINE 1

GENERAL EMERGENCY

NOTE:	**Only the technically based protective actions specified below should be recommended unless there are obvious relevant factors (e.g., severe natural phenomena) that probably were not anticipated when the PARs were developed and that would make the standard PAR recommendations impractical or obviously non-conservative. In such events, the emergency director should use his own judgment as appropriate.**

L. Protective action recommendation guidance

a. EVACUATE AND CONTROL ACCESS IN DOWNWIND ZONES

Recommend immediate evacuation for all of the general population and controlling access within a two mile radius of FNP (Zone A) and 5 miles downwind of FNP (Zones B-5, C-5,...K-5).

- When evacuating 5 mile downwind zones, disregard portions of the 10 mile zones, D-10 through G10 and I-10 through K-10, which fall within 5 miles of FNP.
- Recommendation of a partial evacuation of a zone is not allowed.
- Consider wind direction variability for inclusion of zones adjacent to the plume.
- Recommendation should include zones that fall within approximately 45 degrees (22.5 degrees on either side) of the down wind direction.
- Evacuation time estimates indicated on Figure 1 for the effected zones should be considered when making evacuation recommendations.

b. SHELTER AND CONTROL ACCESS IN DOWNWIND ZONES

Recommend immediate sheltering of the general population and controlling access in the 10 mile downwind zones (B-10, C-10,...K-10), unless more extensive protective actions are known to be required.

- Recommend locating and evacuating hot spots.
- Recommend implementing control of food and water supplies pending.
- Sampling and analysis and possible confiscation in certain areas.
- Recommend monitoring of environmental radiation levels.
- Recommend to consider evacuation of children and pregnant women.
- Recommendation of partial sheltering of a zone is not allowed.
- Consider wind direction variability.
- Consideration should be given to zones adjacent to the plume.
- Recommendation should include zones that fall within approximately 45 degree (22.5 degrees on either side) of the down wind direction.

(PARs continued on next page)

GUIDELINE 1

GENERAL EMERGENCY

c. If dose projections or measured values indicate that General Emergency TEDE or Thyroid CDE limits are exceeded beyond the 5 miles that would normally be evacuated, then consider making the following additional recommendations (Do not delay sending the initial pre determined PARs to do this step.):

- The ED should use best judgement when making these recommendations.
- Many assumptions exist in dose assessment calculations involving both source term and meteorological factors which make computer predictions over long distances highly conservative and subject to scrutiny.
- RMTs should normally be dispatched to verify radiation levels prior to making PARs beyond the above pre-determined PARs.
- If GE TEDE or CDE limits are exceeded between 5 and 10 miles, consider recommending evacuation of downwind zones out to 10 miles and sheltering downwind areas to 15 miles.
- If GE TEDE or CDE limits are exceeded beyond 10 miles, consider recommending evacuation of downwind areas out to a distance where the GE TEDE or CDE limits are no longer exceeded and sheltering downwind to 5 miles beyond the recommended evacuation area.
- When making recommendations for evacuation or sheltering areas outside the 10 mile EPZ simply identify the distance and direction to the states without specifying specific areas.

d. PAR CONTINUING ACTIONS

- Continue to assess conditions such as wind direction shifts, changes in release status, changes in source term, or changes in stability class and upgrade PARs as necessary.
- PARs should be upgraded within 15 minutes of discovery of the status change that required the upgrade.
- Changes in PARs should be transmitted verbally to the state and local agencies within 15 minutes of the PAR upgrade.
- Verbal notification can be done using any convenient communication method. No specific form is required for the verbal notification. Document the notification times on Figure 6.
- Follow the initial verbal notification as soon as possible with a follow-up message on Figure 6 that is sent to the states and counties as hardcopy.

GUIDELINE 1

GENERAL EMERGENCY

RED VERBAL NOTIFICATION FORM

1. [A] This is a Drill [B] Actual Emergency [X] Initial
2. Site: Farley Nuclear Plant
3. Confirmation Phone Numbers: (334)899-5156 or (334)794-0800 Ext.
5. Emergency Classification: [X] General Emergency
6. [X] Emergency Declaration At: Time/Date _____ (central) ____/____/____ MM DD YY
7. Emergency Classification criteria: ☐ G1.1 ☐ G1.2 ☐ G2.1 ☐ G3.1
   Failed Barriers: ☐RCS ☐Containment ☐Fuel Clad ☐none ☐Heat Removal Sys Inadequate
14. Meteorological Data [A] Wind Direction (from) _____ [B] Speed(mph) _____ [C] ΔT _____
15. Recommended Actions:

[X] Evacuate and control access in down wind zones

[X] A-2 ☐ B-5 ☐ C-5 ☐ D5 ☐ E-5 ☐ F-5 ☐ I-5 ☐ J-5 ☐ K-5

[D1] Shelter and control access in down wind zones ***OR*** [D2] Evacuate and control access in down wind zones

☐ B-10 ☐ C-10 ☐ D-10 ☐ E-10 ☐ F-10 ☐ G-10 ☐ H-10 ☐ I-10 ☐ J-10 ☐ K-10

AND In all affected areas: Monitor environmental radiation levels, locate and evacuate hot spots and implement control and possible confiscation of food and water supplies and consider evacuation of children and pregnant women.

[E] Other _____

16. Approved By: _____ (Name) Emergency Director (Title)

A.____Line 1 check box A or B.
B.____Line 3 fill in an extension number that will be staffed.
C.____Line 6 fill in the declaration time/date (time that you evaluated the condition in procedure).
D1.____Line 7 check the box(es) for the criteria requiring this emergency classification. (only one required)
D2.____Check all failed barriers or none, check heat removal inadequate if appropriate.
D3.____If more information is required, list it on a separate page, read it over the ENN when line 7 is read.
E.____Line 14 enter the current met data (35 foot elevation preferred) from PPC (ERDS) or the BOP
F.____Line 15 indicate the PARs required for this declaration, by selecting the down wind zones in lines C and D1 or D2. Use line E as appropriate. For example list PARs beyond 10 miles.
G.____Line 16 the Emergency Director must sign this form.
H.____Within 15 minutes of declaration time, using the ENN (instructions on following page), contact the state and local agencies listed below. Enter below the time of the attempted initial ENN contact (transmission time). Enter below the name of the person contacted once obtained. Check the acknowledged box when receipt of message is acknowledged. The table on the next page lists methods of contact.

Alabama Radiation Control (ARC) (Do not use abbreviation over ENN)/
Troopers/Houston Co. Time_____Name_____Acknowledged☐
GEMA/Early County Time_____Name_____Acknowledged☐
If ARC is at the FEOC in Houston County then Houston County is not required to be notified.
Houston County Time_____Name_____Acknowledged☐
If GEMA is at the FEOC in Early County then Early County is not required to be notified.
Early County Time_____Name_____Acknowledged☐
If AEMA is not on the ENN, they are not required to be notified.
AEMA Time_____Name_____Acknowledged☐

I._____Proceed to the following page for the REMAINING NOTIFICATIONS at step J.

GUIDELINE 1
GENERAL EMERGENCY
RED VERBAL NOTIFICATION FORM

ENN INSTRUCTIONS FOR INITIAL NOTIFICATION

1. Pickup handset, Dial CC9907 to open all speakers, DIAL ** on the ENN, wait 10 seconds, press to talk and announce **"This is name/title at Farley Nuclear Plant. Please obtain a GENERAL EMERGENCY RED initial notification form and monitor the ENN."**
2. Request a state level agency for Alabama and Georgia, a county level agency for Houston County (not required IF Alabama Radiation Control is at the FEOC) and Early County (not required if GEMA at the FEOC), and AEMA acknowledge manning of the ENN per step H on the previous page. Example **"Alabama Radiation Control at Montgomery EOC are you on the line?"**
3. Pickup handset, DIAL ** on the ENN, wait 10 seconds, press to talk and announce on the ENN **"Please prepare to receive a GENERAL EMERGENCY, RED initial notification message with acknowledgment"**, then slowly read the GE initial notification form over the ENN.
4. Have the agencies contacted above, acknowledge receipt of the message.
5. Pickup handset, Dial CC9900 to close all speakers opened in step 1.
6. If any required agency could not be contacted on the ENN, then use numbers listed below or in FNP-0-EIP-8.3 to contact them by any available means.

NOTIFICATION MEANS (underlined numbers are available 24 hours a day)

ALABAMA State Agencies In preferred order **Alabama Radiation Control at Montgomery EOC** ENN (11), OPX (6628), phone (334-242-4378) FAX (334-264-4396) **State Troopers in Montgomery** ENN (12), phone (334-242-4378, 4379) **Alabama Radiation Control at Alabama Forward EOC** ENN (13), OPX 6621), phone (334-793-1565) FAX (8-257-1535) **HOUSTON COUNTY** ENN(31), ENN(13), OPX (6621), FAX(8-257-1535) phone (334-794-9720, 793-9655, 334-677-4807, 4808)	**GEORGIA State Agencies In preferred order** **GEMA at Atlanta EOC** ENN (21), OPX (6629), Phone (404-635-7200) FAX (404-627-4850) **GEMA at Georgia Forward EOC** ENN (22) OPX (6626) phone (229-723-4826) FAX (8-257-2455) **EARLY COUNTY** ENN(42) ENN(41) OPX (6622)FAX(8-257-2455) phone(229-723-3577, 3578, 4826)
AEMA COURTESY NOTIFICATION ENN (51)	**FLORIDA State Agency** **Florida Department of Emergency Management** phone (800-320-0519) (850-413- 9911) FAX (850-488-7841)

REMAINING NOTIFICATIONS (continued from previous page)

J._____Fax a copy of the previous page GENERAL EMERGENCY RED VERBAL NOTIFICATION FORM to the State of Florida, EOF and EOC using speed dial #10 or an alternative method of contact that is listed in the table above.

K._____Verify the state of Florida has received the FAX using the numbers listed in the table above.

L._____Complete Figure 6, side 1, a hardcopy message (check line 1 box C) as soon as possible.

M._____Fax Figure 6, side 1, to state and local agencies as soon as possible, but within one hour of the declaration per the instructions on Figure 6, side 2.

N._____Provide the information on Figure 6, side 1, to the NRC as soon as possible, but within one hour of the declaration per the instructions on Figure 6, side 2.

GUIDELINE 2

SITE AREA EMERGENCY

I. Criteria for Classification

The classification of Site Area Emergency applies to those events which are in progress or have occurred involving actual or likely major failures of plant functions needed for protection of the public from radiation or contamination. The potential for release of radioactive material for the Site Area Emergency classification is up to 1000 Ci of I-131 equivalent, or 10^4 to 10^6 Ci of Xe-133 equivalent. The purpose of the declaration of a Site Area Emergency is to:

(a) Assure that response centers are manned,

(b) Assure that monitoring teams are dispatched,

(c) Assure that personnel involved in an evacuation effort of near site areas are at their duty stations if the situation worsens, and,

(d) Provide current information for and consultation with offsite authorities and the public.

(e) A Site Area Emergency would be declared for plant conditions that warrant activation of emergency centers and monitoring teams.

A Site Area Emergency would be declared for any of the following:

1.0 RCS FAULT

S1.1 A major loss of primary coolant as indicated by:

(a) Decreasing pressurizer pressure and possible level, **AND**

(b) Near normal steam pressure in all steam generators accompanied by,

(1) Containment pressure reaching 27 psig, **AND**

(2) High containment radiation (R-2, R-11, and R-12 reaching their alarm setpoint), **AND**

(3) High containment sump (recirculation) level **AND**

(4) High containment humidity.

GUIDELINE 2

SITE AREA EMERGENCY

S1.2 Rupture of a control rod mechanism housing as indicated by the following:

(a) Rod position indication, **AND**

(b) High RCS pressure surge, **AND**

(c) Momentary nuclear power surge, **AND**

(d) Subsequent behavior indicating a loss of primary coolant.

2.0 SG FAULT OR RUPTURE

S2.1 A loss of offsite power (an unplanned loss of power to the emergency 4160 volt busses F and G from off site sources that are not part of a pre-planned test sequence) (LER #2000-005-00 Unit 1) and a steam generator tube rupture as indicated by:

(a) ECCS actuation, **AND**

(b) High secondary coolant activity (R-15 or R-19 reach full scale)

S2.2 Greater than 50 gpm primary to secondary leak, fuel damage as evidenced by a reactor coolant activity greater than Technical Specification 3.4.16 requiring shutdown or Dose Equivalent Iodine greater than T.S. Figure 3.4.16-1 20% limit, and a steam line break outside containment as indicated by:

(a) Abnormally low steam pressure on one or all steam generators with one or more of the following:

(1) Steam line high flow,

(2) Steam line high differential pressure,

(3) Steam flow greater than feed flow

AND

(b) No abnormal temperature or humidity increase in containment1

GUIDELINE 2

SITE AREA EMERGENCY

3.0 DEGRADED CORE/FUEL FAULT

S3.1 RCS activity > 300 μCi/gram dose equivalent I-131 with potential excessive RCS leakage or potential loss of containment. Figure 8 may be used to help evaluate if Dose Equivalent I-131 (DEI) is > 300 μCi/gram.

S3.2 Degraded core conditions with possible loss of core geometry as indicated by:

(a) ΔT between RCS wide range hot leg and cold leg temperature > 64°F and core exit temperature (in core thermocouples) reading greater than 800°F and increasing, **OR**

(b) Core exit temperature (incore thermocouples) > 1200°F.

- Spent fuel handling accident for which sampling or radiation monitors indicate a projected lower limit of offsite individual exposure to be:

S3.3 100 mrem (.1 rem) TEDE **OR**

S3.4 500 mrem (.5 rem) thyroid CDE

As a result of one of the following:

(a) Dropped spent fuel assembly, **OR**

(b) An object is dropped onto a spent fuel assembly, **OR**

(c) A cask containing a spent fuel assembly is dropped exposing the assembly, **OR**

(d) A spent fuel assembly is deformed as a result of any manipulation, **OR**

(e) Spent fuel pool water level below top of assemblies.

GUIDELINE 2

SITE AREA EMERGENCY

4.0 HIGH EFFLUENT

- Projected exposure at site boundary or projected peak dose location within the plume for EDCM calculation:

S4.1 Greater than or equal to 100 mrem (.1 rem) TEDE exposure

OR

S4.2 Greater than or equal to 500 mrem (.5 rem) thyroid CDE exposure

5.0 EQUIPMENT/STRUCTURE FAILURE

S5.1 Loss of functions for achieving hot standby.

S5.2 Transients requiring operation of shutdown systems with failure to trip (continued power generation but no core damage immediately evident).

6.0 ELECTRICAL/INSTRUMENTATION FAULT

S6.1 Loss of offsite power (an unplanned loss of power to the emergency 4160 volt busses F and G from off site sources that are not part of a pre-planned test sequence) (LER #2000-005-00 Unit 1) with a failure of all emergency AC power for more than 15 minutes.

S6.2 Loss of both trains of auxiliary building DC power for more than 15 minutes.

S6.3 Loss of all main control board annunciator capability for more than 15 minutes while:

(a) Plant is not in cold shutdown, OR

(b) Significant plant transient is initiated while all alarms lost.

GUIDELINE 2

SITE AREA EMERGENCY

7.0 SITE HAZARDS

NOTE:	**A fire affecting ECCS is one that has directly affected the ability of both trains of ECCS (high head, low head or accumulators specifically) to perform their intended function. This does not include attendant equipment if alternate means of performing the attendant equipment functions are available.**

S7.1 A fire affecting ECCS.

Severe natural phenomena being experienced or projected with plant not in cold shutdown:

S7.2 Earthquake greater than SSE levels

S7.3 Flood, low river water, or hurricane surge greater than design levels.

S7.4 Winds in excess of 115 mph.

Other hazards being experienced with the plant not in cold shutdown as follows:

S7.5 Aircraft crash affecting vital structures by fire or impact, **OR**

S7.6 Severe damage to safe shutdown equipment from missiles or explosion, **OR**

S7.7 Entry of toxic or flammable gases into vital areas(s)

8.0 SECURITY/EVACUATION

S8.1 Imminent loss of physical control of the plant (i.e., takeover by terrorists, anti-nuclear factions, etc.). If the basis for declaring this emergency classification is based on security concerns, then refer to table 3 prior to taking actions that will cause people to report to the site or change locations on site.

S8.2 Evacuation of the control room and control of shutdown systems not established from local stations in 15 minutes.

GUIDELINE 2

SITE AREA EMERGENCY

II. Emergency Director Actions

NOTE: THE OPERATIONS SHIFT SUPERINTENDENT SHALL PERFORM THE DUTIES OF THE EMERGENCY DIRECTOR UNTIL HIS ARRIVAL AND ASSUMPTION OF DUTIES.

NOTE: ACTIVATION OF THE TSC AND EOF STAFFS, PER STEPS E1 AND E2, SHOULD BE DONE IN PARALLEL WITH NOTIFICATION OF THE STATE AND LOCAL AGENCIES.

Initials

_____ A. If the plant emergency alarm has not already been activated, then announce over the public address system, "All plant personnel report to designated assembly areas", activate the PEA for 30 seconds, then repeat announcement.

_____ B. Announce the condition and give needed evacuation instructions over plant public address system.

_____ C. Fill in the SITE AREA Emergency Initial Notification Form (last two pages of this guideline), including developing protective action recommendations per step L. Take into account the zones and evacuation time estimates shown in Figure 1.

NOTE: INITIAL NOTIFICATIONS WILL NORMALLY BE MADE BY THE SHIFT CLERK, BUT MAY BE MADE BY OPERATIONS STAFF, TSC STAFF OR OTHER QUALIFIED PERSON USING THE INITIAL NOTIFICATION FORM (LAST TWO PAGES OF THIS GUIDELINE).

NOTE: INITIAL AND UPGRADE CLASSIFICATIONS AND NOTIFICATIONS SHOULD BE DONE FROM THE CONTROL ROOM OR THE TSC, WITH THE EOF INFORMED AS SOON AS POSSIBLE.

D. Initial Notifications

_____1. Within 15 minutes of declaration verbally notify the state agencies using the Site Area Emergency Initial Notification Form (last two pages of this guideline).

_____2. Verify notifications complete and documented on the Site Area Emergency Initial Notification Form (last two pages of this guideline).

GUIDELINE 2

SITE AREA EMERGENCY

E. Emergency Organization Notifications

NOTE: STEPS E1 AND E2, NOTIFYING THE TSC AND EOF STAFF WILL NORMALLY BE ACCOMPLISHED BY HAVING THE SHIFT CLERK COORDINATE ACTIVATION OF THE COMMUNITY ALERT NETWORK (CAN) PER FNP-0-EIP-8.3, TABLE 2 AND STEP 11).

_____ 1. TSC Staff (full activation required initially and then downsize if appropriate per table 2)

_____ 2. EOF Staff (full activation required initially and then downsize if appropriate per table 2)

_____ 3. On-call Emergency Director

_____ 4. On-call Recovery Manager

_____ 5. Emergency Support Manager

_____ 6. Notify Security of Emergency, incoming personnel, access restrictions and to setup the EOF (pax 4611).

F. Other Notifications

_____ 1. NRC (Perform immediately after state notification and within one hour of declaration per Figure 6, side 2.)

_____ 2. Have Regulatory ERDS activated to transmit data to the NRC within one hour of the declaration of the emergency (EIP 8.3, step 10).

_____ 3. If personnel injury or fire is involved, refer to FNP-0-EIP-11.0 and 13.0 respectively for additional actions and EIP-8.0 steps 5.0 and 6.0 for additional notifications.

_____ 4. U.S. Army EOD group at Fort Benning, GA, if necessary.

_____ 5. Savannah River Operations Office, if necessary.

GUIDELINE 2

SITE AREA EMERGENCY

G. In Plant Protective Actions

_____ 1. Ensure personnel accountability per EIP-10.0.

_____ 2. Plan and initiate reentries per EIP-14.0.

_____ 3. Ensure proper Control Room response.

_____ 4. Assign an individual to provide periodic plant status updates.

_____ 5. Assign an individual to maintain a log of important Emergency Director activities.

_____ 6. Assign an individual to keep a record of all off site communications.

_____ 7. Determine what should be done with a unit that is not affected by the declared emergency. Consider the effect on the emergency unit, manpower utilization, plant and grid stability and other relevant factors.

H. Off Site Support

_____ 1. Ensure Radiation Monitoring teams have been dispatched per EIP-4.0.

_____ 2. Provide information to the Recovery Manager for use in press releases and recovery planning.

I. Information to Off Site Authorities

_____ 1. Provide periodic plant status updates, meteorological and dose estimates and release projections based on plant conditions and foreseeable contingencies.

J. Re-Assess plant conditions

_____ 1. Continue to assess plant and radiological conditions to ensure the correct emergency classification is declared.

_____ 2. If a higher emergency classification is required immediately go to the appropriate guideline.

_____ 3. If plant and radiological conditions no longer require the current emergency classification downgrade or close out the emergency class using FNP-0-EIP-28.0.

GUIDELINE 2

SITE AREA EMERGENCY

K. Long term staffing

____ 1. Within 8 hours, provide for full TSC and OSC reliefs.

____ 2. Within 16 hours, provide for 24 hour TSC and OSC coverage.

L. Protective action recommendation guidance

NOTE	**Only the technically based protective actions specified below should be recommended unless there are obvious relevant factors (e.g., severe natural phenomena) that probably were not anticipated when the PARs were developed, and that would make the standard PAR recommendations impractical or obviously non-conservative. In such events, the emergency director should use his own judgment as appropriate.**

a. Protective Action Recommendations are not required; however, they may (at the discretion of the Emergency Director) be made as a precautionary measure, depending on the severity of the plant condition or if the site boundary dose is approaching the General Emergency limit. Refer to the note above.

b. If it is determined that PARs are required, then use the guidance of Guideline 1, Section L when making the recommendations

c. Continue to assess plant and radiological conditions such as wind direction shifts, changes in release status, changes in source term, or changes in stability class and upgrade PARs as necessary. PARs should be upgraded within 15 minutes of discovery of the status change that required the upgrade. Changes in PARs should be transmitted verbally to the state and local agencies within 15 minutes of the PAR upgrade. Verbal notification can be done using any convenient communication method, no specific form is required. Follow the initial verbal notification as soon as possible with a follow-up message on Figure 6 that is sent to the states and counties as hardcopy.

GUIDELINE 2

SITE AREA EMERGENCY

ORANGE VERBAL NOTIFICATION FORM

1. [A] This is a Drill [B] Actual Emergency [X] Initial
2. Site: Farley Nuclear Plant
3. Confirmation Phone Numbers: (334)899-5156 or (334)794-0800 Ext.
5. Emergency Classification: [X] Site Area Emergency
6. [X] Emergency Declaration At: Time/Date _____ (central) _____/_____/_____ MM DD YY
7. Emergency Classification criteria: ☐ S1.1 ☐ S1.2 ☐ S2.1 ☐ S2.2 ☐ S3.1 ☐ S3.2 ☐ S3.3 ☐ S3.4 ☐ S4.1 ☐ S4.2 ☐ S5.1 ☐ S5.2 ☐ S6.1 ☐ S6.2 ☐ S6.3 ☐ S7.1 ☐ S7.2 ☐ S7.3 ☐ S8.1 ☐ S8.2

   Failed Barriers: ☐ RCS ☐ Containment ☐ Fuel Clad ☐ none ☐ Heat Removal Sys Inadequate

14. Meteorological Data [A] Wind Direction (from) _____ [B] Speed(mph) _____ [C] ΔT _____

15 Recommended Actions:

[A] There are no recommended protective actions.

[C] Evacuate and control access in down wind zones

☐ A-2 ☐ B-5 ☐ C-5 ☐ D5 ☐ E-5 ☐ F-5 ☐ I-5 ☐ J-5 ☐ K-5

[D1] Shelter and control access in down wind zones ***OR*** [D2] Evacuate and control access in down wind zones

☐ B-10 ☐ C-10 ☐ D-10 ☐ E-10 ☐ F-10 ☐ G-10 ☐ H-10 ☐ I-10 ☐ J-10 ☐ K-10

AND In all affected areas: Monitor environmental radiation levels, located and evacuate hot spots and implement control and possible confiscation of food and water supplies and consider evacuation of children and pregnant women.

[E] Other _____

16. Approved By: _____ (Name) Emergency Director (Title)

A._____Line 1 check box A or B.

B._____Line 3 fill in an extension number that will be staffed.

C._____Line 6 fill in the declaration time/date (time that you evaluated the condition in procedure).

D1.____Line 7 check the box(es) for the criteria requiring this emergency classification. (only one required)

D2.____Check all failed barriers or none, check heat removal inadequate if appropriate.

D3.____If more information is required, list it on a separate page, read it over the ENN when line 7 is read.

E._____Line 14-enter the current met data (35 foot elevation preferred) from PPC (ERDS) or the BOP.

F._____Line 15 indicate the PARs required for this declaration, (normally 15A, none for SAE). If PARs are required, indicate by selecting the down wind zones in lines C and D1 or D2. Use line E if necessary.

G._____Line 16, the Emergency Director must sign this form.

H. Within 15 minutes of declaration time, using the ENN (instructions on following page), contact the state agencies listed below. Enter below the time of the attempted initial ENN contact (transmission time). Enter below the name of the person contacted once obtained. Check the acknowledged box when receipt of message is acknowledged. The table on the next page lists methods of contact

Alabama Radiation Control/
Troopers/Houston Co. Time_____Name_____Acknowledged☐

GEMA/Early County Time_____Name_____Acknowledged☐

If AEMA is not on the ENN, they are not required to be notified.

AEMA Time_____Name_____Acknowledged☐

I._____Proceed to the following page for the REMAINING NOTIFICATIONS at step J.

GUIDELINE 2
SITE AREA EMERGENCY
ORANGE VERBAL NOTIFICATION FORM

ENN INSTRUCTIONS FOR INITIAL NOTIFICATION

1. Pickup handset, dial CC9907 to open all speakers, DIAL ** on the ENN, wait 10 seconds, press to talk and announce **"This is name/title at Farley Nuclear Plant. Please obtain an SITE AREA EMERGENCY, ORANGE initial notification form and monitor the ENN."**
2. Request a state level agency for Alabama and Georgia and the AEMA acknowledge manning of the ENN per step H on the previous page. Example **"Alabama Radiation Control at Montgomery EOC are you on the line?"**
3. Pickup handset, DIAL ** on the ENN, wait 10 seconds, press to talk and announce on the ENN **"Please prepare to receive a SITE AREA EMERGENCY, ORANGE initial notification message with acknowledgment"**, then slowly read the SAE initial notification form over the ENN.
4. Have the agencies contacted above, acknowledge receipt of the message.
5. Pickup handset, dial CC9900 to close all speakers opened in step 1.
6. If any required agency could not be contacted on the ENN, then use numbers listed below or in FNP-0-EIP-8.3 to contact them by any available means.

NOTIFICATION MEANS (underlined numbers are available 24 hours a day)

ALABAMA State Agencies in preferred order **Alabama Radiation Control at Montgomery EOC** ENN (11), OPX (6628), phone (334-242-4378) FAX (334-264-4396) **State Troopers in Montgomery** ENN (12), phone (334-242-4378, 4379) **Alabama Radiation Control at Alabama Forward EOC** ENN (13), OPX 6621), phone (334-793-1565) FAX (8-257-1535) **HOUSTON COUNTY** ENN(31), ENN(13), OPX (6621), FAX(8-257-1535) phone (334-794-9720, 793-9655, 334-677-4807, 4808)	**GEORGIA State Agencies in preferred order** **GEMA at Atlanta EOC** ENN (21), OPX (6629), Phone (404-635-7200) FAX (404-627-4850) **GEMA at Georgia Forward EOC** ENN (22) OPX (6626) phone (229-723-4826) FAX (8-257-2455) **EARLY COUNTY** ENN(42) ENN(41) OPX (6622)FAX(8-257-2455) phone(229-723-3577, 3578, 4826)
AEMA COURTESY NOTIFICATION ENN (51)	**FLORIDA State Agency** **Florida Department of Emergency Management** phone (800-320-0519) (850-413- 9911) FAX (850-488-7841)

REMAINING NOTIFICATIONS (continued from previous page)

J_____Fax a copy of the previous page SITE AREA EMERGENCY, ORANGE VERBAL NOTIFICATION FORM to the State of Florida, EOF and EOC using speed dial #10 or an alternative method of contact that is listed in the table above.

K_____Verify the State of Florida has received the FAX using the numbers listed in the table above.

L_____Complete Figure 6, side 1, as a hardcopy message (check line 1 box C) as soon as possible.

M_____Fax Figure 6, side 1, to state and local agencies as soon as possible, but within one hour of the declaration per the instructions on Figure 6, side 2.

N_____Provide the information on Figure 6, side 1 to the NRC as soon as possible but within one hour of the declaration per the instructions on Figure 6, side 2.

GUIDELINE 3

ALERT

I. Criteria for Classification

The classification of Alert applies to situations in which events are in process or have occurred which involve an actual or potential substantial degradation of the level of safety of the plant. The potential for release of radioactive material for the Alert classification is up to 10 curies of I-131 equivalent, or up to 10^4 curies of Xe-133 equivalent. The purpose of offsite alert is to assure that emergency personnel are readily available to respond if the situation becomes more serious or to perform confirmatory radiation monitoring, if required, and to provide offsite authorities current status information for possible further action.

(a) An Alert would be declared for plant conditions that warrant precautionary activation of the technical support center, operations support centers, and the emergency operations facility (at the discretion of the Recovery Manager).

An Alert would be declared for any of the following:

1.0 RCS FAULT

A1.1 A primary coolant leak greater than 50 gpm. Indications of such a leak will include high charging flow **AND**

(a) High containment radiation (R 2, R 22, and R 12) **AND**

(b) High containment humidity

OR

(c) Pressurizer relief or safety valve discharge line temperature high **AND**

(d) Pressurizer relief tank level, pressure or temperature increasing or above normal.

A1.2 Single rod cluster control assembly withdrawal at power as detected by:

(a) Rod position indicator, **AND**

(b) Increasing core power, **AND**

(c) Increasing Tavg.

GUIDELINE 3

ALERT

2.0 SG FAULT OR RUPTURE

A2.1 Steam generator tube rupture indicated by:

(a) ECCS actuation, **AND**

(b) High secondary coolant activity (R-15, R-19, R-23A, or R-23B reach full scale).

A2.2 Greater than 10 gpm primary to secondary leak as indicated by high secondary coolant activity (R-15, R-19, R-23A, or R-23B alarming) **WITH** a steam line break outside containment indicated by:

(a) Abnormally low steam pressure on one or all steam generators with one or more of the following:

(1) Steam line high flow, **OR**

(2) Steam line high differential pressure, **OR**

(3) Steam flow greater than feedwater flow

AND

(b) No abnormal temperature, or humidity increase in containment.

A2.3 A steam or feed line break inside containment as indicated by abnormally low pressure on one steam generator with the following:

(a) Steam line high differential pressure, **OR**

(b) Steam flow greater than feed flow, **OR**

(c) Steam line high flow, **AND**

(d) Containment high temperature

GUIDELINE 3

ALERT

3.0 DEGRADED CORE/FUEL FAULT

A3.1 Severe loss of fuel cladding as indicated by a reactor coolant activity equal to or greater than 300 µCi/gram equivalent I-131. Figure 8 may be used to help evaluate if Dose Equivalent I-131 (DEI) is > 300 µCi/gram.

A3.2 Spent fuel handling accident in which an increase in radiation level (i.e., alarm condition or off scale reading) is observed on R-2, R-11, R-12, R-5, **OR** R-25 as a result of one of the following:

(a) Dropped spent fuel assembly, **OR**

(b) An object is dropped onto a spent fuel assembly, **OR**

(c) A cask containing a spent fuel assembly is dropped, **OR**

(d) A spent fuel assembly is deformed as a result of any manipulation, **OR**

(e) Low spent fuel pool water level.

4.0 HIGH EFFLUENT

Radiological effluent at the site boundary (combined effect from both units) greater than 10 times the radiological technical specification instantaneous limits (based on ODCM) as follows, per EIP-9.5:

A4.1 Liquids: 10 times 10CFR20 Appendix B, Table 2, Column 2

A4.2 Liquids: Dissolved or entrained noble gases: 0.001 mCi/ml

A4.3 Noble gases (whole body) 5.7E-4 Rem/hr (5.7E-1 mrem/hr)

A4.4 Noble gases (skin): 3.4E-3 Rem/hr (3.4 mrem/hr)

A4.5 Airborne radioiodine and particulates other than noble gases: 1.7E-3 Rem/hr (1.7 mrem/hr)

GUIDELINE 3

ALERT

A4.6 High radiation levels or high airborne contamination indicative of a severe degradation in the control of radioactive materials as indicated by:

(a) Readings on R-14 (stack gas monitor), R-21 (stack particulate monitor) **OR** R-22 (stack gas monitor) reading off scale,

AND

(b) Sampling or R-27 high range containment monitor confirms direct readings.

5.0 EQUIPMENT/STRUCTURE FAILURE

A5.1 Loss of all auxiliary feedwater (Modes 1-3), **OR**

A5.2 Loss of both trains of RHR (All modes), **OR**

A5.3 Loss of both trains of CCW (Modes 1-4), **OR**

A5.4 Loss of both trains of Service Water (Modes 1-4)

A5.5 Failure of the reactor protection system to initiate and complete a trip which brings the reactor subcritical.

6.0 ELECTRICAL/INSTRUMENTATION FAULT

A6.1 Loss of offsite power (an unplanned loss of power to the emergency 4160 volt busses F and G from off site sources that are not part of a pre-planned test sequence) (LER #2000-005-00 Unit 1) with a failure of all emergency AC power for less than 15 minutes.

A6.2 Loss of both trains of auxiliary building DC power for less than 15 minutes.

A6.3 Loss of all main control board annunciator capability.

GUIDELINE 3

ALERT

7.0 SITE HAZARDS

Severe natural phenomena being experienced or projected as follows:

A7.1 Earthquake greater than OBE levels. (ARP-1.12 LOC MK5)

A7.2 Flood, low river water or hurricane surge near design levels that could impact plant operations.

A7.3 Any tornado striking facility

A7.4 Hurricane winds near design basis level (115 mph)

Hazards experienced onsite which affect plant operation such as:

A7.5 Aircraft crash

A7.6 Release of toxic gas

A7.7 Release of flammable gas

NOTE:	**A fire or explosion potentially affecting ECCS is one that has directly affected the ability of one train of ECCS (high head, low head or accumulators specifically) to perform its intended function. This does not include attendant equipment if alternate means of performing the attendant equipment functions are available.**

A7.8 Fire or explosion potentially affecting ECCS

8.0 SECURITY/EVACUATION

A8.1 A security emergency involving the occurrence or credible imminent threat of sabotage. If the basis for declaring this emergency classification is based on security concerns, then refer to Table 3 prior to taking actions that will cause people to report to the site or change locations on site.

A8.2 Evacuation of control room anticipated or required with control of shutdown systems established from local stations.

GUIDELINE 3

ALERT

II. Emergency Director Actions

NOTE: THE OPERATIONS SHIFT SUPERINTENDENT SHALL PERFORM THE DUTIES OF THE EMERGENCY DIRECTOR UNTIL HIS ARRIVAL AND ASSUMPTION OF DUTIES.

NOTE: ACTIVATION OF THE TSC AND EOF STAFFS, PER STEPS E1 AND E2, SHOULD BE DONE IN PARALLEL WITH NOTIFICATION OF THE STATE AND LOCAL AGENCIES.

_____ A. Announce the condition and give needed evacuation instructions over plant public address system.

_____ B. Evacuate affected areas of the plant as appropriate.

_____ C. Fill in the ALERT Initial Notification Form (last two pages of this guideline).

NOTE: INITIAL NOTIFICATIONS WILL NORMALLY BE MADE BY THE SHIFT CLERK, BUT MAY BE MADE BY OPERATIONS STAFF, TSC STAFF OR OTHER QUALIFIED PERSON USING THE INITIAL NOTIFICATION FORM (LAST TWO PAGES OF THIS GUIDELINE).

NOTE: INITIAL AND UPGRADE CLASSIFICATIONS AND NOTIFICATIONS SHOULD BE DONE FROM THE CONTROL ROOM OR THE TSC, WITH THE EOF INFORMED AS SOON AS POSSIBLE.

D. Initial Notifications

_____1. Within 15 minutes of declaration, verbally notify the state and local agencies using the Alert Initial Notification Form (last two pages of this guideline).

_____2. Verify notifications complete and documented on the Alert Initial Notification Form (last two pages of this guideline).

GUIDELINE 3

ALERT

1. **IF** an ALERT was declared due to radiological effluents greater than or equal to ALERT limits which are 10 times Technical Specification limits, **THEN** enter the following information on the Emergency Notification form (Figure 6, line 7) when making the initial hardcopy notification of the Alert:

   a. ODCM site boundary dose rates from EIP-9.5.

   and

   b. The following note:

   "Dose rate at site boundary has been calculated using the ODCM as required by the FNP Technical Specification. EDCM calculation is not appropriate."

E. Emergency Organization Notifications

NOTE:	**STEPS E.1 AND E.2, NOTIFYING THE TSC AND EOF STAFF WILL NORMALLY BE ACCOMPLISHED BY HAVING THE SHIFT CLERK COORDINATE ACTIVATION OF THE COMMUNITY ALERT NETWORK (CAN) PER FNP-0-EIP-8.3, TABLE 2 AND STEP 11).**

_____ 1. TSC Staff (full activation required initially and then downsize if appropriate per table 2)

_____ 2. EOF Staff (full staffing required initially and then activate the EOF or downsize staff as appropriate per table 2)

_____ 3. On-call Emergency Director

_____ 4. On-call Recovery Manager

_____ 5. Emergency Support Manager

_____ 6. Notify Security of Emergency, incoming personnel, access restrictions and to setup the EOF (PAX 4611)

GUIDELINE 3

ALERT

F. Other Notifications

_____ 1. NRC (Perform immediately after state notification and within one hour of declaration per Figure 6, side 2)

_____ 2. Have Regulatory ERDS activated to transmit data to the NRC within one hour of the declaration of the emergency (EIP-8.3, step 10)

_____ 3. If personnel injury or fire is involved, refer to FNP-0-EIP-11.0 and 13.0 respectively for additional actions and EIP-8.0 steps 5.0 and 6.0 for additional notifications

_____ 4. U.S. Army EOD group at Fort Benning, GA, if necessary

_____ 5. Savannah River Operations Office, if necessary

G. In Plant Protective Actions

_____ 1. Ensure personnel accountability per EIP-10.0, if any areas of the plant were evacuated due to hazardous conditions

_____ 2. Plan and initiate re-entries per EIP-14.0, if any areas of the plant were evacuated due to hazardous conditions

_____ 3. Ensure proper Control Room response

_____ 4. Assign an individual to provide periodic plant status updates

_____ 5. Assign an individual to maintain a log of important Emergency Director activities

_____ 6. Assign an individual to keep a record of all off site communications

_____ 7. Determine what should be done with a unit that is not affected by the declared emergency. Consider the effect on the emergency unit, manpower utilization, plant and grid stability, and other relevant factors.

H. Off Site Support

_____ 1. Ensure Radiation Monitoring teams have been dispatched per EIP 4.0.

_____ 2. Provide information to the Recovery Manager for use in press releases and recovery planning

GUIDELINE 3

ALERT

I. Information to Off Site Authorities

_____ 1. Provide periodic plant status updates, meteorological and dose estimates and release projections based on plant conditions and foreseeable contingencies.

J. Re-Assess plant conditions

_____ 1. Continue to assess plant and radiological conditions to ensure the correct emergency classification is declared.

_____ 2. If a higher emergency classification is required immediately go to the appropriate guideline

_____ 3. If plant and radiological conditions no longer require the current emergency classification downgrade or close out the emergency class using FNP-0-EIP-28.0.

K. Long term staffing

_____ 1. Within 8 hours, provide for full TSC and OSC reliefs

_____ 2. Within 16 hours, provide for 24 hour TSC and OSC coverage

L. Protective action recommendation guidance

NOTE	**Only the technically based protective actions specified below should be recommended, unless there are obvious relevant factors (e.g., Severe natural phenomena) that probably were not anticipated when the PARs were developed, and that would make the standard PAR recommendations impractical or obviously non-conservative. In such events, the emergency director should use his own judgment as appropriate.**

_____ 1. Protective Action Recommendations are not required. Block A of line 15 on the notification form should be checked.

GUIDELINE 3
ALERT
YELLOW VERBAL NOTIFICATION FORM

1. [A] This is a Drill [B] Actual Emergency [X] Initial
2. Site: Farley Nuclear Plant
3. Confirmation Phone Numbers: (334)899-5156 or (334)794-0800 Ext.
5. Emergency Classification: [X] Alert
6. [X] Emergency Declaration At: Time/Date _____ (central) ____/____/____ MM DD YY
7. Emergency Classification criteria: ☐ A1.1 ☐ A1.2 ☐ A2.1 ☐ A2.2 ☐ A2.3 ☐ A3.1 ☐ A3.2 ☐ A4.1 ☐ A4.2 ☐ A4.3 ☐ A4.4 ☐ A4.5 ☐ A4.6 ☐ A5.1 ☐ A5.2 ☐ A5.3 ☐ A5.4 ☐ A5.5 ☐ A6.1 ☐ A6.2 ☐ A6.3 ☐ A7.1 ☐ A7.2 ☐ A7.3 ☐ A7.4 ☐ A7.5 ☐ A7.6 ☐ A7.7 ☐ A7.8 ☐ A8.1 ☐ A 8.2

   Failed Barriers: ☐RCS ☐Containment ☐Fuel Clad ☐none ☐Heat Removal Sys Inadequate
14. Meteorological Data [A] Wind Direction (from) _____ [B] Speed(mph) _____ [C] ΔT _____
15. Recommended Actions:

   [X] There are no recommended protective actions.

16. Approved By: _____ (Name) Emergency Director (Title)

A.____Line 1 check box A or B.
B.____Line 3 fill in an extension number that will be staffed.
C.____Line 6 fill in the declaration time/date (time that you evaluated the condition in procedure).
D1.____Line 7 check the box(es) for the criteria requiring this emergency classification. (only one required)
D2.____Check all failed barriers or none, check heat removal inadequate if appropriate.
D3.____If more information is required, list it on a separate page, read it over the ENN when line 7 is read.
E.____Line 14-enter the current met data (35 foot elevation preferred) from PPC (ERDS) or the BOP.
F.____Line 16, the Emergency Director must sign this form.
G. Within 15 minutes of declaration time, using the ENN (instructions on following page), contact the state agencies listed below. Enter below the time of the attempted initial ENN contact (transmission time). Enter below the name of the person contacted once obtained. Check the acknowledged box when receipt of message is acknowledged. The table on the next page lists methods of contact.

Alabama Radiation Control/
Troopers/Houston Co. Time_____Name_____Acknowledged☐
GEMA/Early County Time_____Name_____Acknowledged☐
If AEMA is not on the ENN, they are not required to be notified.
AEMA Time_____Name_____Acknowledged☐
H.____Proceed to the following page for the REMAINING NOTIFICATIONS at step I.

GUIDELINE 3
ALERT
YELLOW VERBAL NOTIFICATION FORM

ENN INSTRUCTIONS FOR INITIAL NOTIFICATION

1. Pickup handset, dial CC9907 to open all speakers, DIAL ** on the ENN, wait 10 seconds, press to talk and announce **"This is name/title at Farley Nuclear Plant. Please obtain an ALERT, YELLOW initial notification form and monitor the ENN."**
2. Request a state level agency for Alabama and Georgia and the AEMA acknowledge manning of the ENN per step G on the previous page. Example **"Alabama Radiation Control at Montgomery EOC are you on the line?"**
3. Pickup handset, DIAL ** on the ENN, wait 10 seconds, press to talk and announce on the ENN **"Please prepare to receive an ALERT, YELLOW initial notification message with acknowledgment"**, then slowly read the ALERT initial notification form over the ENN.
4. Have the agencies contacted above, acknowledge receipt of the message.
5. Pickup handset, Dial CC9900 to close all speakers opened in step 1.
6. If any required agency could not be contacted on the ENN, then use numbers listed below or in FNP-0-EIP-8.3 to contact them by any available means.

NOTIFICATION MEANS (underlined numbers are available 24 hours a day)

ALABAMA State Agencies in preferred order **Alabama Radiation Control at Montgomery EOC** ENN (11), OPX (6628), phone (334-242-4378) FAX (334-264-4396) **State Troopers in Montgomery** ENN (12), phone (334-242-4378, 4379) **Alabama Radiation Control at Alabama Forward EOC** ENN (13), OPX 6621), phone (334-793-1565) FAX (8-257-1535) **HOUSTON COUNTY** ENN(31), ENN(13), OPX (6621), FAX(8-257-1535) phone (334-794-9720, 793-9655, 334-677-4807, 4808)	**GEORGIA State Agencies in preferred order** **GEMA at Atlanta EOC** ENN (21), OPX (6629), Phone (404-635-7200) FAX (404-627-4850) **GEMA at Georgia Forward EOC** ENN (22) OPX (6626) phone (229-723-4826) FAX (8-257-2455) **EARLY COUNTY** ENN(42) ENN(41) OPX (6622)FAX(8-257-2455) phone(229-723-3577, 3578, 4826)
AEMA COURTESY NOTIFICATION ENN (51)	**FLORIDA State Agency** **Florida Department of Emergency Management** phone (800-320-0519) (850-413- 9911) FAX (850-488-7841)

REMAINING NOTIFICATIONS (continued from previous page)

I_____Fax a copy of the previous page ALERT YELLOW VERBAL NOTIFICATION FORM to the State of Florida, EOF, and EOC using speed dial #10 or an alternative method of contact that is listed in the table above.

J_____Verify the State of Florida has received the FAX using the numbers listed in the table above.

K_____Complete Figure 6, side 1, as a harcopy message (check line 1 box C) as soon as possible.

L_____Fax Figure 6 side 1, to state and local agencies as soon as possible, but within one hour of the declaration per the instructions on Figure 6, side 2.

M_____Provide the information on Figure 6, side 1, to the NRC as soon as possible, but within one hour of the declaration per the instructions on Figure 6, side 2.

GUIDELINE 4

NOUE

I. Criteria for Classification

The classification of Notification of Unusual Event applies to situations in which events are in process or have occurred which could indicate a potential degradation of the level of safety of the plant. No releases of radioactive material requiring offsite response or monitoring are expected unless further degradation of safety systems occur.

(a) A NOTIFICATION OF UNUSUAL EVENT would be required for any plant condition that warrants increased awareness on the part of state and/or local offsite authorities or involve other than normal plant shutdown.

A Notification of Unusual Event would be declared for any of the following:

1.0 RCS FAULT

N1.1 Failure of a pressurizer safety valve to close.

N1.2 Failure of the pressurizer power operated relief valve and its remote motor operated isolation valve to close.

N1.3 Initiation of safety injection either automatically or manually as a result of plant parameters approaching or reaching their setpoint.

N1.4 Complete loss of forced RCS flow as indicated by RCS flow indicators on all three RCS loops.

2.0 SG FAULT OR RUPTURE

N2.1 Failure of any steam generator safety valve to close

N2.2 Failure of any steam generator power operated relief valve to close

N2.3 Loss of secondary coolant outside containment concurrent with ECCS activation

GUIDELINE 4

NOUE

3.0 DEGRADED CORE/FUEL FAULT

N3.1 Indicated subcooling (margin to saturation) decreased below 10°F.

N3.2 Inadvertent loading of a fuel assembly into an improper position which causes Fq to be greater than the Technical Specification limit.

N3.3 RCS activity exceeds Tech. Spec. 3.4.16 limit that requires shutdown or Dose Equivalent Iodine greater than T.S. Figure 3.4.16-1 20% limit.

4.0 HIGH EFFLUENT

Radiological effluents at the site boundary (combined effluent from both units) in excess of the radiological technical specifications instantaneous limits (based on ODCM) as follows:

N4.1 Liquids 10CFR20 Appendix B, Table 2 Column 2

N4.2 Liquids: Dissolved or entrained noble gases 1.0 E-4 μCi/ml

N4.3 Noble gases (whole body) 5.7E-5 Rem/hr (5.7E-2 mrem/hr)

N4.4 Noble gases (skin) 3.4E-4 Rem/hr (3.4E-1 mrem/hr)

N4.5 Airborne radioiodine and particulates other than noble gases: 1.7E-4 Rem/hr (1.7E-1 mrem/hr)

5.0 EQUIPMENT/STRUCTURE FAILURE

N5.1 Loss of containment integrity requiring shutdown to HOT SHUTDOWN.

6.0 ELECTRICAL/INSTRUMENTATION FAULT

N6.1 Loss of both trains of offsite power (an unplanned loss of power to the emergency 4160 volt busses F and G from off site sources that are not part of a pre-planned test sequence) (LER #2000-005-00 Unit 1) OR loss of all onsite emergency power (diesel generators and auxiliaries).

N6.2 Loss of control room indication or annunciation to an extent requiring shutdown.

GUIDELINE 4

NOUE

7.0 SITE HAZARDS

Natural phenomena being experienced or projected to affect the plant site as follows:

N7.1 Any earthquake.

N7.2 Unusual river water level caused by flood, low water or hurricane surge.

N7.3 Any tornado onsite.

N7.4 Any threatening hurricane.

Hazards experienced onsite or within one mile of the site boundary which could affect plant operations, such as:

N7.5 Aircraft crash.

N7.6 Explosion.

NOTE:	**Any fire or explosion affecting the following two types of systems, such that the train or system cannot perform its intended function or be used to maintain safe shutdown, would be used to declare a NOUE per N7.7 or N7.8:** **1. A safety related system other than ECCS (i.e. safety related system excluding high head, low head or accumulators).** **2. A non-safety related nuclear process system (e.g. BTRS, GFFD, etc).**

N7.7 Fire affecting a safety related or a non-safety related nuclear process system.

N7.8 Fire or explosion affecting safe shutdown capability.

N7.9 Release of toxic gas.

N7.10 Release of flammable gas.

GUIDELINE 4

NOUE

8.0 SECURITY/EVACUATION

N8.1 Attempted unauthorized entry into a vital area, attempted sabotage of vital equipment or a plant specific credible threat notification. If the basis for declaring this emergency classification is based on security concerns, then refer to table 3 prior to taking actions that will cause people to report to the site or change locations on site.

GUIDELINE 4

NOUE

II. Emergency Director Actions

NOTE: THE OPERATIONS SHIFT SUPERINTENDENT SHALL PERFORM THE DUTIES OF THE EMERGENCY DIRECTOR UNTIL HIS ARRIVAL AND ASSUMPTION OF DUTIES.

Initials

_____ A. Announce the condition and give needed evacuation instructions over plant public address system.

_____ B. Evacuate affected areas of the plant as appropriate.

_____ C. Fill in the NOUE Initial Notification Form (last two pages of this guideline).

NOTE: INITIAL NOTIFICATIONS WILL NORMALLY BE MADE BY THE SHIFT CLERK, BUT MAY BE MADE BY OPERATIONS STAFF, TSC STAFF OR OTHER QUALIFIED PERSON USING THE INITIAL NOTIFICATION FORM (LAST TWO PAGES OF THIS GUIDELINE).

NOTE: INITIAL AND UPGRADE CLASSIFICATIONS AND NOTIFICATIONS SHOULD BE DONE FROM THE CONTROL ROOM OR THE TSC, WITH THE EOF INFORMED AS SOON AS POSSIBLE.

D. Initial Notifications

_____1. Within 15 minutes of declaration, verbally notify the state and local agencies using the NOUE Initial Notification Form (last two pages of this guideline).

_____2. Verify notifications complete and documented on the NOUE Initial Notification Form (last two pages of this guideline).

GUIDELINE 4

NOUE

1. **IF** an NOUE was declared due to radiological effluents greater than or equal to NOUE limits which are Technical Specification limits, **THEN** enter the following information on the Emergency Notification form (Figure 6, line 7) when making the initial hardcopy notification of the NOUE:

   a. ODCM site boundary dose rates from EIP-9.5.

   and

   b. The following note:

   "Dose rate at site boundary has been calculated using the ODCM as required by the FNP Technical Specification. EDCM calculation is not appropriate."

E. Emergency Organization Notifications

NOTE:	**TABLE 2 PROVIDES GUIDANCE AS TO THE REQUIRED LEVEL OF ACTIVATION OF THE TSC AND EOF. LEVEL OF ACTIVATION, IF ANY, IS AT THE DISCRETION OF THE ED/RM. SEE EIP-6/27 FOR GUIDANCE.**

____ 1. TSC Staff, if activated by the ED

____ 2. EOF Staff, if activated by the RM

____ 3. On-call Emergency Director

____ 4. On-call Recovery Manager

____ 5. Emergency Support Manager

____ 6. Notify Security of Emergency, incoming personnel and access restrictions (PAX 4611).

GUIDELINE 4

NOUE

F. Other Notifications

____ 1. NRC (Perform immediately after state notification and within one hour of declaration per Figure 6, side 2).

____ 2. If personnel injury or fire is involved, refer to FNP-0-EIP-11.0 and 13.0 respectively for additional notifications.

____ 3. U.S. Army EOD group at Fort Benning, GA, if necessary

____ 4. Savannah River Operations Office, if necessary

G. In Plant Protective Actions

____ 1. Ensure personnel accountability per EIP-10.0, if any areas of the plant were evacuated due to hazardous conditions.

____ 2. Plan and initiate re entries per EIP-14.0, if any areas of the plant were evacuated due to hazardous conditions.

____ 3. Ensure proper Control Room response.

____ 4. Assign an individual to provide periodic plant status updates.

____ 5. Assign an individual to maintain a log of important Emergency Director activities.

____ 6. Assign an individual to keep a record of all off site communications.

____ 7. Determine what should be done with a unit that is not affected by the declared emergency. Consider the effect on the emergency unit, manpower utilization, plant and grid stability, and other relevant factors.

H. Off- Site Support

____ 1. Ensure Radiation Monitoring teams have been dispatched per EIP-4.0.

____ 2. Provide information to the Recovery Manager for use in press releases and recovery planning.

GUIDELINE 4

NOUE

I. Information to Off-Site Authorities

_____ 1. Provide periodic plant status updates, meteorological and dose estimates and release projections based on plant conditions and foreseeable contingencies.

J. Re-Assess plant conditions

_____ 1. Continue to assess plant and radiological conditions to ensure the correct emergency classification is declared.

_____ 2. If a higher emergency classification is required immediately go to the appropriate guideline.

_____ 3. If plant and radiological conditions no longer require the current emergency classification downgrade or close out the emergency class using FNP-0-EIP-28.0.

K. Long term staffing

_____ 1. Within 8 hours, provide for full TSC and OSC reliefs.

_____ 2. Within 16 hours, provide for 24 hour TSC and OSC coverage.

L. Protective action recommendation guidance

NOTE	**Only the technically based protective actions specified below should be recommended, unless there are obvious relevant factors (e.g., severe natural phenomena) that probably were not anticipated when the PARs were developed and that would make the standard PAR recommendations impractical or obviously non-conservative. In such events, the emergency director should use his own judgment as appropriate.**

_____ 1. Protective Action Recommendations are not required. Block A of Line 15 on the notification form should be checked.

GUIDELINE 4
NOTIFICATION OF UNUSUAL EVENT
BLUE VERBAL NOTIFICATION FORM

1. [A] This is a Drill [B] Actual Emergency [X] Initial
2. Site: Farley Nuclear Plant
3. Confirmation Phone Numbers: (334)899-5156 or (334)794-0800 Ext.
5. Emergency Classification:
   [X] Notification Of Unusual Event
6. [X] Emergency Declaration At: Time/Date _____ (central) ____/____/____ MM DD YY
7. Emergency Classification criteria: ☐ N1.1 ☐ N1.2 ☐ N1.3 ☐ N1.4 ☐ N2.1 ☐ N2.2
   ☐ N2.3 ☐ N3.1 ☐ N3.2 ☐ N3.3 ☐ N4.1 ☐ N4.2 ☐ N4.3 ☐ N4.4 ☐ N4.5
   ☐ N5.1 ☐ N6.1 ☐ N6.2 ☐ N7.1 ☐ N7.2 ☐ N7.3 ☐ N7.4 ☐ N7.5 ☐ N7.6
   ☐ N7.7 ☐ N7.8 ☐ N7.9 ☐ N7.10 ☐ N8.1
   Failed Barriers: ☐RCS ☐Containment ☐Fuel Clad ☐none ☐Heat Removal Sys Inadequate
14. Meteorological Data [A] Wind Direction (from) _____ [B] Speed(mph) _____ [C] ΔT _____
15. Recommended Actions:
   [X] There are no recommended protective actions.

16. Approved By: _____ (Name) Emergency Director (Title)

A.____Line 1 check box A or B.
B.____Line 3 fill in an extension number that will be staffed.
C.____Line 6 fill in the declaration time/date (time that you evaluated the condition in procedure).
D1.____Line 7 check the box(es) for the criteria requiring this emergency classification. (only one required)
D2.____Check all failed barriers or none, check heat removal inadequate if appropriate.
D3.____If more information is required, list it on a separate page, read it over the ENN when line 7 is read.
E.____Line 14-enter the current met data (35 foot elevation preferred) from PPC (ERDS) or the BOP.
F.____Line 16, the Emergency Director must sign this form.
G.____Within 15 minutes of declaration time, using the ENN (instructions on following page), contact the state agencies listed below. Enter below the time of the attempted initial ENN contact (transmission time). Enter below the name of the person contacted once obtained. Check the acknowledged box when receipt of message is acknowledged. The table on the next page lists methods of contact

Alabama Radiation Control/
Troopers/Houston Co. Time_____Name_____Acknowledged☐
GEMA/Early County Time_____Name_____Acknowledged☐
If AEMA is not on the ENN, they are not required to be notified.
AEMA Time_____Name_____Acknowledged☐
H.____Proceed to the following page for the REMAINING NOTIFICATIONS at step I.

GUIDELINE 4
NOTIFICATION OF UNUSUAL EVENT
BLUE VERBAL NOTIFICATION FORM

ENN INSTRUCTIONS FOR INITIAL NOTIFICATION

1. Pickup handset, dial CC9907 to open all speakers, DIAL ** on the ENN, wait 10 seconds, press to talk and announce **"This is name/title at Farley Nuclear Plant. Please obtain a Notification of Unusual Event, BLUE initial notification form and monitor the ENN."**
2. Request a state level agency for Alabama and Georgia and the AEMA acknowledge manning of the ENN per step G on the previous page. Example **"Alabama Radiation Control at Montgomery EOC are you on the line?"**
3. Pickup handset, DIAL ** on the ENN, wait 10 seconds, press to talk and announce on the ENN **"Please prepare to receive a Notification Of Unusual Event, BLUE initial notification message with acknowledgment"**, then slowly read the NOUE initial notification form over the ENN.
4. Have the agencies contacted above, acknowledge receipt of the message.
5. Pickup handset, Dial CC9900 to close all speakers opened in step 1.
6. If any required agency could not be contacted on the ENN, then use numbers listed below or in FNP-0-EIP-8.3 to contact them by any available means.

NOTIFICATION MEANS (underlined numbers are available 24 hours a day)	
ALABAMA State Agencies in preferred order **Alabama Radiation Control at Montgomery EOC** ENN (11), OPX (6628), phone (334-242-4378) FAX (334-264-4396) **State Troopers in Montgomery** ENN (12), phone (334-242-4378, 4379) **Alabama Radiation Control at Alabama Forward EOC** ENN (13), OPX 6621), phone (334-793-1565) FAX (8-257-1535) **HOUSTON COUNTY** ENN(31), ENN(13), OPX (6621), FAX(8-257-1535) phone (334-794-9720, 793-9655, 334-677-4807, 4808)	**GEORGIA State Agencies in preferred order** **GEMA at Atlanta EOC** ENN (21), OPX (6629), Phone (404-635-7200) FAX (404-627-4850) **GEMA at Georgia Forward EOC** ENN (22) OPX (6626) phone (229-723-4826) FAX (8-257-2455) **EARLY COUNTY** ENN(42) ENN(41) OPX (6622)FAX(8-257-2455) phone(229-723-3577, 3578, 4826)
AEMA COURTESY NOTIFICATION ENN (51)	**FLORIDA State Agency** **Florida Department of Emergency Management** phone (800-320-0519) (850-413- 9911) FAX (850-488-7841)

REMAINING NOTIFICATIONS (continued from previous page)

I_____Fax a copy of the previous page NOUE BLUE VERBAL NOTIFICATION FORM to the State of Florida, EOF, and EOC using speed dial #10 or an alternative method of contact that is listed in the table above.

J_____Verify the State of Florida has received the FAX using the numbers listed in the table above.

K_____Complete Figure 6, side 1, a harcopy message (check line 1 box C) as soon as possible.

L_____Fax Figure 6, side 1, to state and local agencies as soon as possible, but within one hour of the declaration per the instructions on Figure 6, side 2.

M_____Provide the information on Figure 6, side 1, to the NRC as soon as possible, but within one hour of the declaration per the instructions on Figure 6, side 2.

SHARED

TABLE 1

REFERENCES

- Joseph M. Farley Nuclear Plant Emergency Plan
- FNP-0-RCP-25, Health Physics Activities During a Radiological Accident
- FNP-0-EIP-29, Long Term Dose Assessment
- FNP-0-EIP-20, Chemistry and Environmental Support to the Emergency Plan
- FNP-0-M-007, Emergency Dose Calculation Method
- FNP-0-M-011, Offsite Dose Calculation Manual
- EPA "Manual of Protective Action Guides and Protective Actions for Nuclear Incidents"
- NUREG-0654, "Criteria for Preparation and Evaluation of Radiological Emergency Response Plans and Preparedness in Support of Nuclear Power Plants"
- FNP-0-CCP-641, "Operation of the Plant Vent Stack Monitoring System"
- NT-86-0014, Gaseous Releases, Emergency Classifications
- NT-87-0543, Protective Action Recommendation Policy
- ALA 88-694, Westinghouse "Potential Radiological Impact of Steam Generator Tube Uncover"
- FNP-0-CCP-1300, Chemistry and Environmental Activities During a Radiological Accident
- SCS letter File: ENG 15 94-0466 Log: FP 94-0364, Containment Dose R-27 to DEI Conversion

TABLE 2

EMERGENCY FACILITY ACTIVATION

	Unusual Event	Alert	Site Area Emergency	General
Technical Support Center	*	Activate #	Activate #	Activate
Operations Support Center	*	Activate #	Activate #	Activate
Emergency Operations Facility	**	***	Activate #	Activate
Emergency Operations Center	**	***	Activate #	Activate
Public Information Corporate Offices	**	***	Activate #	Activate
News Media Center ##	N/A	****	***	Activate

NOTE: (It is recommended that the full TSC and EOF staffs be called in at the ALERT level. After evaluating plant conditions, staff may be released below a GENERAL EMERGENCY (at the discretion of the RM/ED).

* NO ACTION, STANDBY OR ACTIVATE AT THE DISCRETION OF THE EMERGENCY DIRECTOR

** NO ACTION, STANDBY OR ACTIVATE AT THE DISCRETION OF THE RECOVERY MANAGER

*** STANDBY OR ACTIVATE AT THE DISCRETION OF THE RECOVERY MANAGER

**** ACTIVATION DEPENDENT ON LEVEL OF MEDIA INTEREST OR EOF ACTIVATION

FOLLOWING FULL ACTIVATION, FACILITY STAFFING WILL BE TO THE EXTENT DEEMED NECESSARY BY THE EMERGENCY DIRECTOR AND RECOVERY MANAGER

AUTOMATICALLY ACTIVATED UPON EOF ACTIVATION

TABLE 3

CONSIDERATIONS FOR EMERGENCY CLASSIFICATION BASED ON SECURITY EVENTS

IF THERE IS A POTENTIAL HAZARD TO THE SAFETY OF PERSONNEL DUE TO THE SECURITY EVENT THAT IS IN PROGRESS, THE PROVISIONS OF THE EIPs MAY HAVE TO BE MODIFIED TO ENSURE THAT PLANT PERSONNEL ARE PROTECTED. CONSIDERATION SHOULD BE GIVEN TO THE SAFETY OF PERSONNEL WHO ARE ON SITE AND THOSE WHO WILL BE REPORTING TO THE SITE. THE FOLLOWING LIST DESCRIBES SOME OF THE ACTIONS THAT MIGHT BE DIFFERENT:

1. Do not delay declaring the emergency, some specific actions in the guidelines may have to be altered.

2. Contact security for recommendations to determine hazardous areas prior to taking any actions that would move people to different areas of the plant.

3. Ensure that control room or other supervisory personnel do not dispatch personnel to areas of the plant until it has been determined that those areas are safe.

4. If activating the plant emergency alarm (PEA) would put personnel at risk while proceeding to assembly areas, do not activate the alarm. In lieu of the PEA, consider making an appropriate announcement over the plant page with specific instructions such as to remain inside buildings, evacuate specific areas or other appropriate announcements based on security recommendations.

5. If having the TSC and EOF staffs report to the plant site would put them at risk, consider a manual callout of a minimum staff with specific instructions identifying where to report in lieu of using the CAN to activate.

6. Consider use of alternate facilities for the TSC and EOF staffs.

7. If the CAN is used to activate the TSC and EOF staffs, have the security force member at the plant access direct them to specific locations as they arrive on site.

8. After security reports that the security hazards have been eliminated, return to full implementation of the EIPs as appropriate.

TABLE 4

INFORMATION LIKELY TO BE REQUESTED BY THE NRC IF AN EMERGENCY IS DECLARED
(NRC INFORMATION NOTICE 98-08)

1. Is there any change to the classification of the event? If so, what is the reason?

2. What is the ongoing/imminent damage to the facility, including affected equipment and safety features?

3. Have toxic or radiological releases occurred or been projected, including changes in the release rate? If so, what is the projected onsite and offsite releases and what is the basis of assessment?

4. What are the health effect/consequences to onsite/offsite people? How many onsite/offsite people are/will be affected and to what extent?

5. Is the event under control? When was control established, or what is the planned action to bring the event under control? What is the mitigative action underway or planned?

6. What onsite protective measures have been taken or planned?

7. What offsite protective actions have been recommended to state/local officials?

8. What is the status of State/local/other Federal agencies' responses, if known?

9. If applicable, what is the status of public information activities, such as alarm, broadcast, or press releases (regulatee/state/local/other federal agencies)? Has a Joint Information Center (News Media Center) been activated?

10 MILE EMERGENCY PLANNING ZONE

The boxes in each quadrant and at the top of the drawing, represent the time in minutes that it would take to evacuate the zones in that quadrant during a **WD** (week day), **WN** (week night), **WE** (week end) and AW (adverse weather conditions). The time includes a 15 minute allowance for notification.

Zones	WD	WN	WE	AW
2 Mile Zone A	95	80	90	95
10 Mile All Sectors	140	115	115	150

270-360 Quadrant, 100% Evacuation Times

Zones	WD	WN	WE	AW
5 Mile	105	90	95	110
10 mile	115	100	105	120

000-090 Quadrant, 100% Evacuation Times

Zones	WD	WN	WE	AW
5 Mile	105	95	100	110
10 mile	110	105	110	120

Circles represent 2, 5 and 10 mile radii

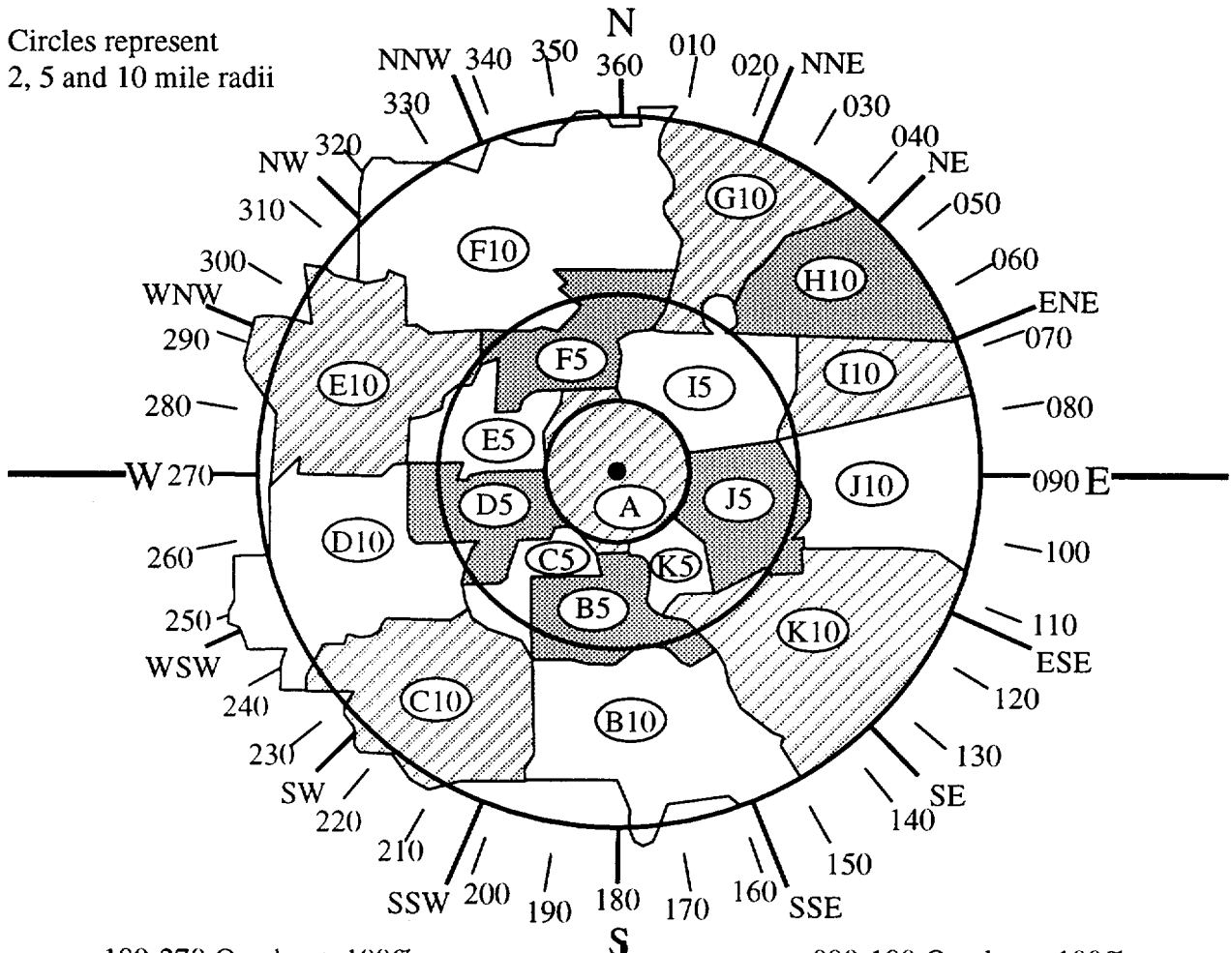

180-270 Quadrant, 100% Evacuation Times

Zones	WD	WN	WE	AW
5 Mile	100	95	95	105
10 mile	140	110	115	150

090-180 Quadrant, 100% Evacuation Times

Zones	WD	WN	WE	AW
5 Mile	105	95	100	110
10 mile	110	100	105	115

FIGURE 1

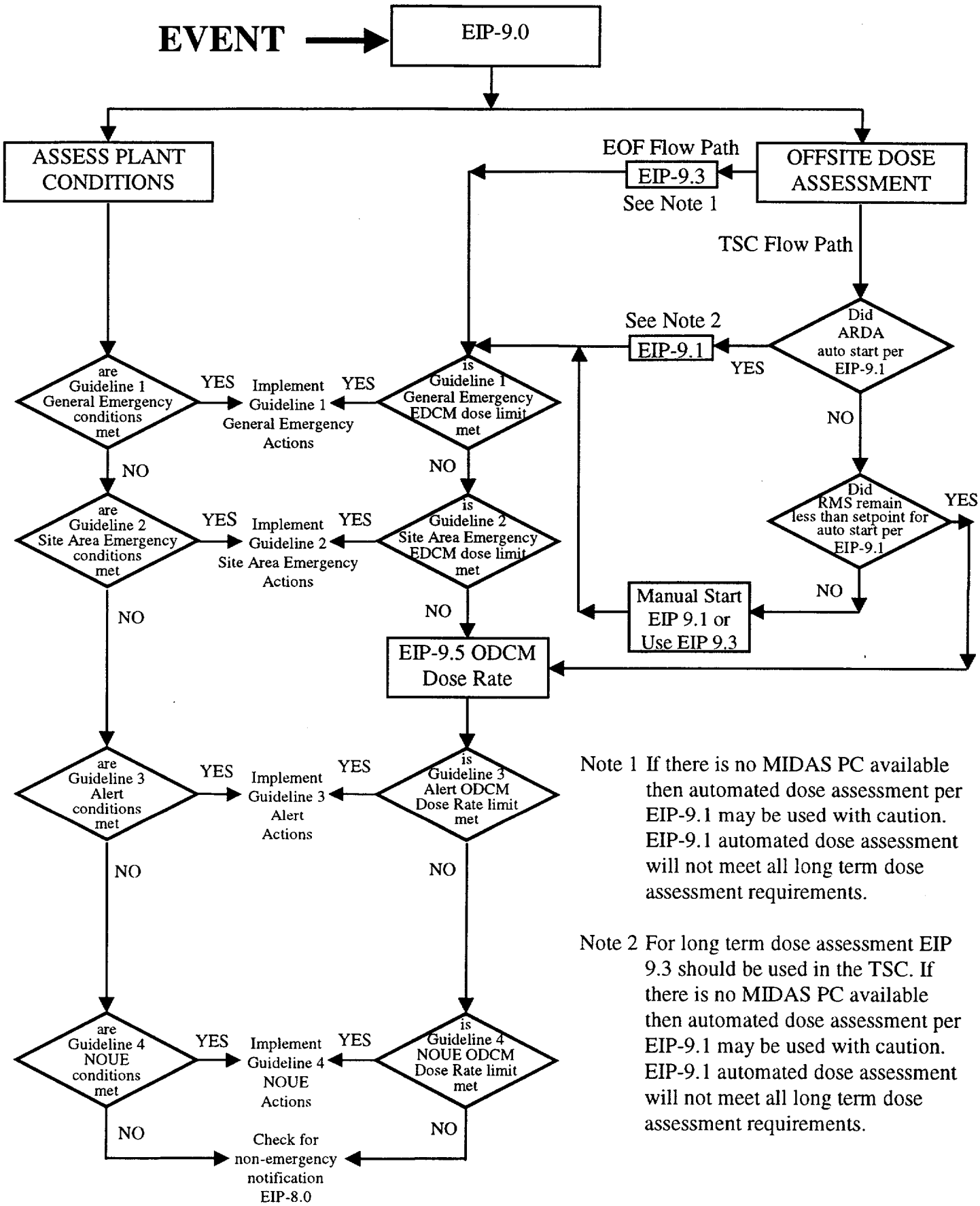

Note 1 If there is no MIDAS PC available then automated dose assessment per EIP-9.1 may be used with caution. EIP-9.1 automated dose assessment will not meet all long term dose assessment requirements.

Note 2 For long term dose assessment EIP 9.3 should be used in the TSC. If there is no MIDAS PC available then automated dose assessment per EIP-9.1 may be used with caution. EIP-9.1 automated dose assessment will not meet all long term dose assessment requirements.

FIGURE 2

TELECOPY GROUP DIAL NUMBERS

Telecopy (fax) the initial or followup emergency notification form (Fig. 6) to all of the locations using the group dial numbers listed on the below flow chart. When the activity report is received retransmit the form to any location that did not receive the form using the individual speed dial numbers listed below. Verify that the form has been received at all locations through the ENN, OPX or commercial phone number. The telecopy to the Florida FDEM needs only to be verified for the initial notification or classification upgrade.

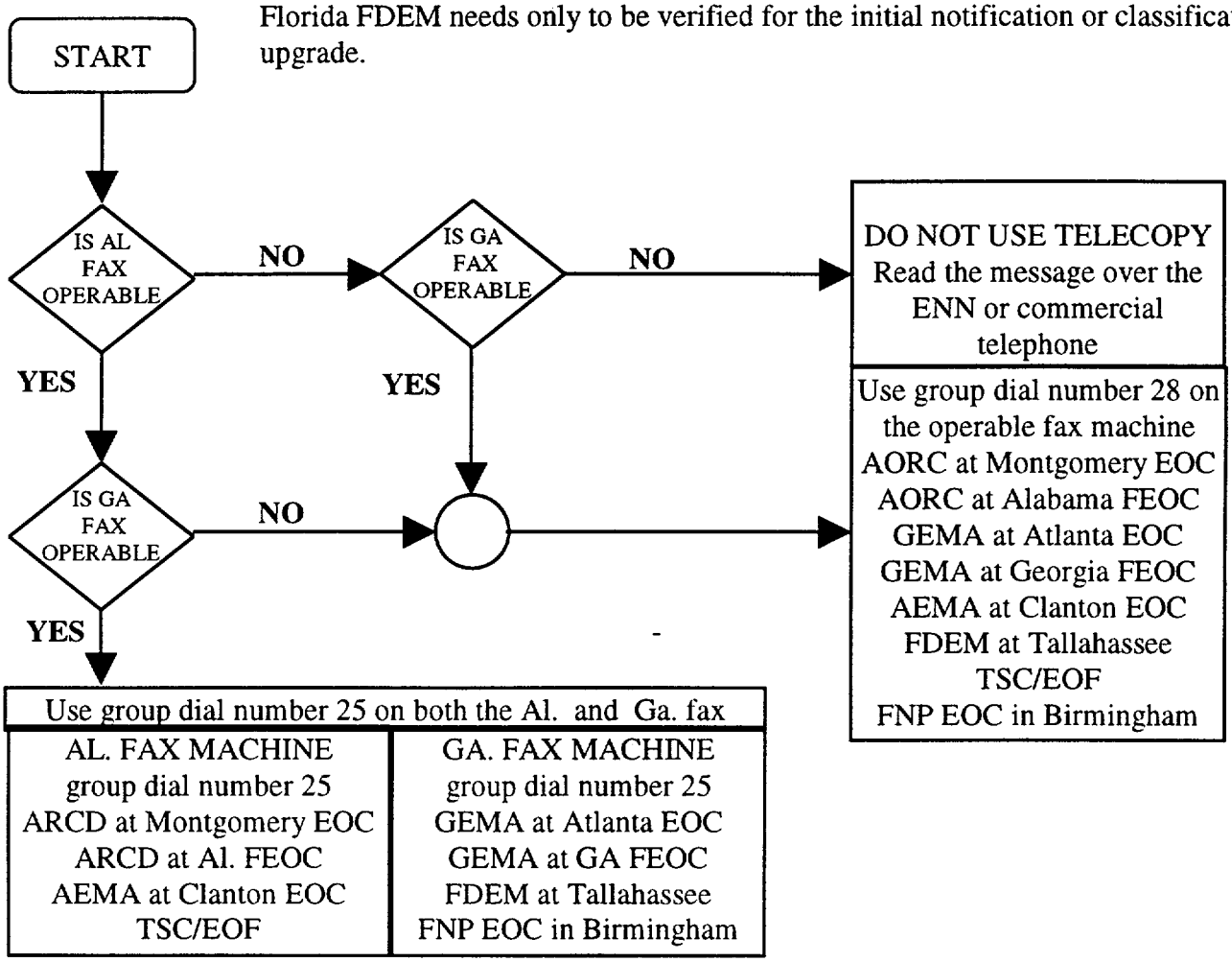

Refer to FNP-0-EIP-8.1 or FIG. 6 for OPX/commercial numbers.

LOCATION	FAX IND SPEED DIAL	ENN PHONE NUMBER
Alabama Office of Radiation Control At Montgomery EOC	1	11
Alabama Office of Radiation Control At Alabama Forward EOC	3	13
Alabama Emergency Management Agency at Clanton EOC	7	51
FNP TSC	5	62
FNP EOF (from opposite location)	5	63
Georgia Emergency Management Agency at Atlanta EOC	2	21
Georgia Emergency Management Agency at Georgia Forward EOC	4	22
Florida Department of Emergency Management at Tallahassee	8	none
FNP EOC in Birmingham	6	65

FIGURE 3

FIGURE 4
THIS FIGURE HAS BEEN DELETED

FIGURE 5
THIS FIGURE HAS BEEN DELETED

EMERGENCY NOTIFICATION

1. [A] This is a Drill [B] Actual Emergency [C] Initial [D] Follow-up* Message Number _____
2. Site: Farley Nuclear Plant Unit: _____ Reported By: _____
3. Transmittal Time/Date: _____ (central) _____ / _____ / _____ (mm dd yy) Confirmation Phone Numbers: (334)899-5156 or (334)794-0800 Ext. _____
   Telecopy Phone Number: [ ] (205) 257-1155 (TSC) [ ] (205) 257-1035 (EOF) [ ] _____ (Other)
4. Authentication (if required): N/A (Number) N/A (Codeword)
5. Emergency Classification:
   [A] Notification Of Unusual Event [B] Alert [C] Site Area Emergency [D] General Emergency
6. [A] Emergency Declaration At: [B] Termination At: Time/Date _____ (central) _____ / _____ / _____ (mm dd yy) (If B go to item 16)
7. Emergency Description/Remarks: _____

   Problems Include: [A] RCS Leaking [B] Containment Leaking [C] Fuel Damage Indicated [D] Heat Removal Systems Inadequate [E] Additional comments on following page
8. Plant Condition: [A] Improving [B] Stable [C] Degrading [D] RMTs Dispatched [E] Site Evacuation
9. Reactor Status: [A] Shutdown Time/Date: _____ (central) _____ / _____ / _____ (mm dd yy) [B] _____ % Power
10. Emergency Releases:
    [A] None (go to item 14) [B] Potential (go to item 14) [C] Is Occurring [D] Has Occurred
11. Type of Release [A] Ground Level [B] Mixed Mode
    [C] Airborne: Started: _____ (Time (central)) _____ / _____ / _____ (Date) [D] Stopped: _____ (Time (central)) _____ / _____ / _____ (Date)
    [E] Liquid: Started: _____ (Time (central)) _____ / _____ / _____ (Date) [F] Stopped: _____ (Time (central)) _____ / _____ / _____ (Date)
12. Release Magnitude [A] µCurie per Sec. [B] Curies Tech. Specification Limits [C] Below [D] Above
    [E] Noble Gases _____ [F] Iodines _____
    [G] Particulates _____ [H] Other _____
13. Estimate Of Projected Off Site Dose [A] New [B] Unchanged [C] Estimated Duration: _____ Hrs.

		TEDE (mrem)		Thyroid CDE (mrem)
Site Boundary	[D]	_____	[E]	_____
2 miles	[F]	_____	[G]	_____
5 miles	[H]	_____	[I]	_____
10 miles	[J]	_____	[K]	_____

14. Meteorological Data [A] Wind Direction (from) _____ ° [B] Speed(mph) _____
    [C] Stability Class _____ [D] Precipitation (type) _____
15. Actions:
    [A] There are no recommended protective actions.
    [B] We would like to discuss recommended protective actions.
    [C] Evacuate and control access in down wind zone(s) _____
    [D] Shelter and control access in down wind zone(s) _____
    AND In all affected areas: Monitor environmental radiation levels, locate and evacuate hot spots and implement control and possible confiscation of food and water supplies and consider evacuation of children and pregnant women.
    [E] Other _____
16. Approved By: _____ (Name) _____ (Title) Time/Date _____ (central) _____ / _____ / _____ (mm dd yy)

* If items 9 - 13 have not changed, only items 1 - 8 and 14 - 16 are required to be completed

FIGURE 6 SIDE 1
Version 48

COMMUNICATIONS MEANS

DO NOT TELECOPY THIS SIDE

17.0 For initial and upgrade declarations only,
Notify NRC Headquarters. Read side one of this form. Immediately after State Notification, within one hour of Declaration.
☐ ENS (301-816-5100; 301-951-0550; 301-415-0550)
☐Commercial (1-301-816-5100; 1-301-951-0550; 1-301-415-0550 Date/Time

_____	_____	_____
Person contacted	date	time

18.0 For initial, upgrade and follow-up notifications, fax figure 6 side 1 to state, local and company agencies using the speed dial button determined in figure 3 as soon as possible. For initial and upgrade notifications fax within one hour of declaration.

19.0 Verify that the following agencies received the fax using the ENN or other numbers listed below

Person Contacted	Date/Time	
_____	_____	Alabama Radiation Control at Montgomery EOC
_____	_____	Alabama Radiation Control at Alabama FEOC (Houston County)
_____	_____	GEMA at Atlanta EOC
_____	_____	GEMA at Georgia FEOC (Early County)
_____	_____	AEMA at Clanton EOC
_____	_____	FDEM at Tallahassee
_____	_____	TSC/EOF
_____	_____	CEOC in Birmingham

NOTIFICATION MEANS (underlined numbers are available 24 hours a day)	
ALABAMA State Agencies in preferred order **Alabama Radiation Control at Montgomery EOC** ENN (11), OPX (6628), phone (334-242-4378) FAX (334-264-4396) **State Troopers in Montgomery** ENN (12), phone (334-242-4378, 4379) **Alabama Radiation Control at Alabama Forward EOC** ENN (13), OPX 6621), phone (334-793-1565) FAX (8-257-1535) **HOUSTON COUNTY** ENN(31), ENN(13), OPX (6621), FAX(8-257-1535) phone (334-794-9720, 793-9655, 334-677-4807, 4808)	**GEORGIA State Agencies in preferred order** **GEMA at Atlanta EOC** ENN (21), OPX (6629), Phone (404-635-7200) FAX (404-627-4850) **GEMA at Georgia Forward EOC** ENN (22) OPX (6626) phone (229-723-4826) FAX (8-257-2455) **EARLY COUNTY** ENN(42) ENN(41) OPX (6622)FAX(8-257-2455) phone(229-723-3577, 3578, 4826)
AEMA COURTESY NOTIFICATION ENN (51)	**FLORIDA State Agency** **Florida Department of Emergency Management** phone (800-320-0519) (850-413- 9911) FAX (850-488-7841)

Figure 6 side 2
Version 48

EMERGENCY NOTIFICATION
CONTINUATION SHEET ***

7. (Continued) Additional Comments: Message Number_____

*** This form is only required if 7E is checked on Figure 6.

Dose Equivalent Iodine Estimation

The below graph and table can be used to estimate if dose equivalent iodine (DEI) is above 300 microcuries per gram. When using this figure the following rules must be used:

1. The only radiation monitors that can be used to enter the graph or table are R-27A or B.
2. The leak rate is assumed to be constant for the time period specified.
3. The bottom of the scale for the R-27 monitors is 1 REM/hr.
4. Any R-27 reading greater than 1 REM/hr for a leak rate of 50 gpm or less is an indication of DEI being greater than or equal to 300 microcuries per gram.
5. Enter the graph with the R-27 reading and the length of time that the leak has been in progress. If the intersection of R-27 and time is above and to the left of the curve for the specific leak rate the DEI is likely to be greater than 300 microcuries per gram.
6. Enter the table with the number of minutes since the start of the leak and the leak rate. If the actual R-27 dose rate is above the value listed in the table the DEI is likely to be greater than 300 microcuries per gram.

	TIME (MIN)	5 MIN	10 MIN	30 MIN	60 MIN	120 MIN	180 MIN	240 MIN
LEAK	1000	1.66	3.1	7.41	11.9	18.1	22.3	25
RATE	500		1.55	3.7	5.93	9.06	11.1	12.5
[GPM]	100				1.19	1.81	2.23	2.5

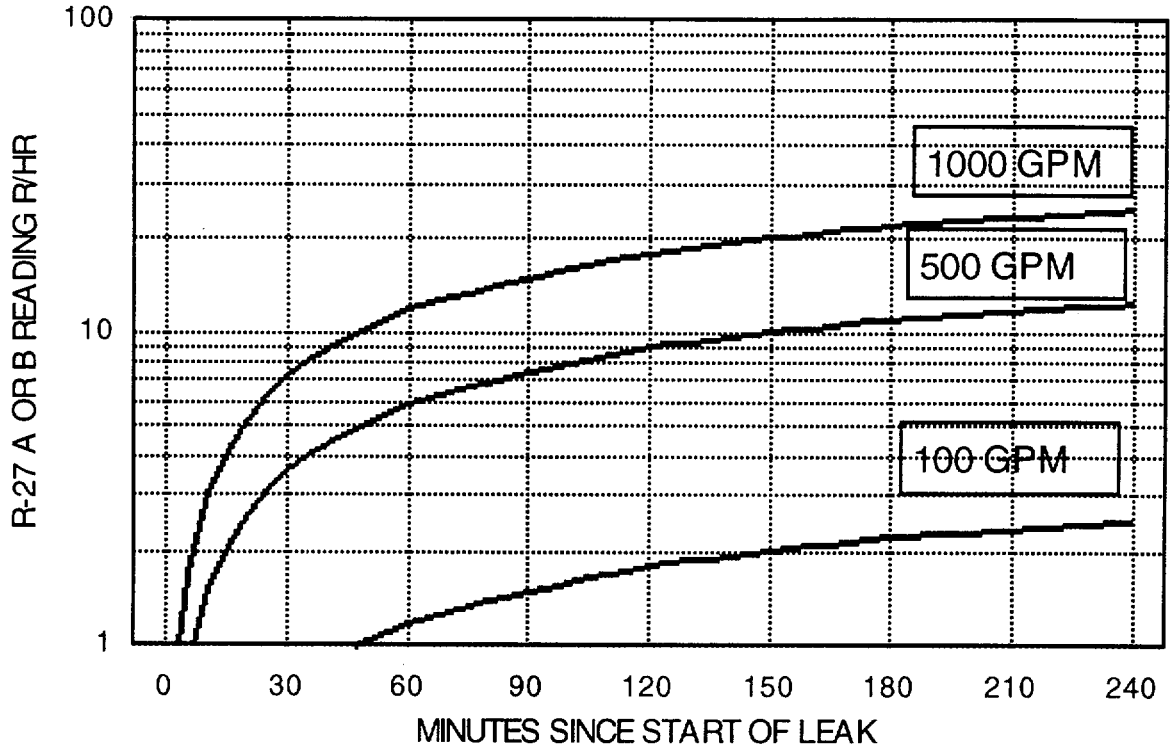

FIGURE 8
Version 48