UNITED STATES
NUCLEAR REGULATORY COMMISSION
WASHINGTON, D. C. 20555

① See Correction ltr of 12/13/84
② See Bases Chg to SER supporting Admt 111

November 21, 1984

Docket Nos. 50-250
and 50-251

DISTRIBUTION
Docket File
L PDR
ORB#1 Rdg
DEisenhut
ACRS 10
JPartlow
TBarnhart 8
SECY
EJordan
DBrinkman
RDiggs
NRC PDR
Gray File 4
CParrish
OELD
~~RFerguson~~
PMcKee
DMcDonald
LHarmon
WJones
CMiles
RBallard

Mr. J. W. Williams, Jr., Vice President
Nuclear Energy Department
Florida Power and Light Company
Post Office Box 14000
Juno Beach, Florida 33408

Dear Mr. Williams:

The Commission has issued the enclosed Amendment No. 111 to Facility Operating License No. DPR-31 and Amendment No. 105 to Facility Operating License No. DPR-41 for the Turkey Point Plant Units Nos. 3 and 4, respectively. The amendments consist of changes to the Technical Specifications in response to your application transmitted by letter dated March 14, 1983, as supplemented.

These amendments allow spent fuel pool storage capacity expansion from 621 to 1404 spaces for each spent fuel pool. The expansion is to be achieved by reracking each spent fuel pool with two discrete regions within each pool. Region I is for storage of new fuel with an enrichment equal to or less than 4.5% U-235. Region II is for storage of irradiate fuel meeting the burnup requirements defined in the Technical Specifications.

The request for these amendments was individually noticed on June 7, 1984 (49 FR 23715) followed by a monthly notice on July 7, 1984 (49 FR 29925). Comments, request for a hearing and petition for leave to intervene were initiated on July 9, 1984, by the Center for Nuclear Responsibility and Ms. Joette Lorion. The comments and concerns relevant to these amendments are addressed in the enclosed Safety Evaluation. The Safety Evaluation also includes a final determination of No Significant Hazards Consideration.

Under NRC regulations, the Commission may issue and make an amendment immediately effective, notwithstanding a request for a hearing, in advance of holding the hearing where, as here, it has determined that the amendment involves no significant hazards consideration. Such issuance is also consistent with Section 132 of the Nuclear Waste Policy Act of 1982 which requires the Commission to encourage and expedite the effective use of available storage at civilian reactor sites.

Copies of the Safety Evaluation and Notice of Issuance and Final Determination of No Significant Hazards Consideration are enclosed.

The Environmental Assessment related to this action was transmitted to you on November 14, 1984. The Notice of Issuance of Environmental Assessment

8412070179 841121
PDR ADOCK 05000250
P PDR

and Finding of No Significant Impact was published in the Federal Register on November 16, 1984 (49 FR 45514).

Sincerely,

/s/DMcDonald

Daniel G. McDonald, Jr., Project Manager
Operating Reactors Branch #1
Division of Licensing

Enclosures:
1. Amendment No. 111 to DPR-31
2. Amendment No. 105 to DPR-41
3. Safety Evaluation
4. Notice

cc: w/enclosures
See next page

ORB#1:DL	ORB#1:DL	C-ORB#1:DL	OELD	AD:OR:DL
CParrish	DMcDonald;ps	SVarga	MYoung	GLainas
11/14/84	11/14/84	11/17/84	11/19/84	11/20/84

w/ revisions noted

J. W. Williams, Jr.
Florida Power and Light Company

Turkey Point Plants
Units 3 and 4

cc: Harold F. Reis, Equire
Newman and Holtziner P.C.
1615 L Street, N.W.
Washington, DC 10036

Bureau of Intergovernmental Relations
660 Apalachee Parkway
Tallahassee, Florida 33130

Norman A. Coll, Esquire
Steel, Hector and Davis
4000 Southeast Financial
Center
Miami, Florida 33131-2398

Mr. Ken N. Harris, Vice President
Turkey Point Nuclear Plant
Florida Power and Light Company
P.O. Box 013100
Miami, Florida 33101

Mr. M. R. Stierheim
County Manager of Metropolitan
Dade County
Miami, Florida 33130

Resident Inspector
Turkey Point Nuclear Generating Station
U.S. Nuclear Regulatory Commission
Post Office Box 57-1185
Miami, Florida 33257-1185

Regional Radiation Representative
EPA Region IV
345 Courtland Street, N.W.
Atlanta, GA 30308

Mr. Jack Shreve
Office of the Public Counsel
Room 4, Holland Building
Tallahassee, Florida 32304

Administrator
Department of Environmental
Regulation
Power Plant Siting Section
State of Florida
2600 Blair Stone Road
Tallahassee, Florida 32301

James P. O'Reilly
Regional Administrator, Region II
U.S Nuclear Regulatory Commission
Suite 2900
101 Marietta Street
Atlanta, GA 30303

Martin H. Hodder, Esquire
1131 N.E. 86th Street
Miami, Florida 33138

Joette Lorion
7269 SW 54 Avenue
Miami, Florida 33143

Mr. Chris J. Baker, Plant Manager
Turkey Point Nuclear Plant
Florida Power and Light Company
P.O. Box 013100
Miami, Florida 33101

Attorney General
Department of Legal Affairs
The Capitol
Tallahassee, Florida 32304

Mr. Ulray Clark, Administrator
Radiological Health Services
Department of Health and
Rehabilitative Services
1323 Winewood Blvd.
Tallahassee, Florida 32301

UNITED STATES
NUCLEAR REGULATORY COMMISSION
WASHINGTON, D. C. 20555

FLORIDA POWER AND LIGHT COMPANY

DOCKET NO. 50-250

TURKEY POINT PLANT UNIT NO. 3

AMENDMENT TO FACILITY OPERATING LICENSE

Amendment No. 111
License No. DPR-31

1. The Nuclear Regulatory Commission (the Commission) has found that:

   A. The application for amendment by Florida Power and Light Company (the licensee) dated March 14, 1984 as supplemented complies with the standards and requirements of the Atomic Energy Act of 1954, as amended (the Act) and the Commission's rules and regulations set forth in 10 CFR Chapter I;

   B. The facility will operate in conformity with the application, the provisions of the Act, and the rules and regulations of the Commission;

   C. There is reasonable assurance (i) that the activities authorized by this amendment can be conducted without endangering the health and safety of the public, and (ii) that such activities will be conducted in compliance with the Commission's regulations;

   D. The issuance of this amendment will not be inimical to the common defense and security or to the health and safety of the public; and

   E. The issuance of this amendment is in accordance with 10 CFR Part 51 of the Commission's regulations and all applicable requirements have been satisfied.

2. Accordingly, the license is amended by changes to the Technical Specifications as indicated in the attachment to this license amendment, and paragraph 3.B of Facility Operating License No. DPR-31 is hereby amended to read as follows:

8412070183 841121
PDR ADOCK 05000250
P PDR

(B) Technical Specifications

The Technical Specifications contained in Appendix A and B, as revised through Amendment No. 111, are hereby incorporated in the license. The licensee shall operate the facility in accordance with the Technical Specifications.

3. This license amendment is effective as of the date of issuance and shall be implemented within 60 days of issuance.

FOR THE NUCLEAR REGULATORY COMMISSION

Steven A. Varga, Chief
Operating Reactors Branch #1
Division of Licensing

Attachment:
Changes to the Technical
Specifications

Date of Issuance: November 21, 1984

UNITED STATES
NUCLEAR REGULATORY COMMISSION
WASHINGTON, D. C. 20555

FLORIDA POWER AND LIGHT COMPANY

DOCKET NO. 50-251

TURKEY POINT PLANT UNIT NO. 4

AMENDMENT TO FACILITY OPERATING LICENSE

Amendment No. 105
License No. DPR-41

1. The Nuclear Regulatory Commission (the Commission) has found that:

   A. The application for amendment by Florida Power and Light Company (the licensee) dated March 14, 1984 as supplemented complies with the standards and requirements of the Atomic Energy Act of 1954, as amended (the Act) and the Commission's rules and regulations set forth in 10 CFR Chapter I;

   B. The facility will operate in conformity with the application, the provisions of the Act, and the rules and regulations of the Commission;

   C. There is reasonable assurance (i) that the activities authorized by this amendment can be conducted without endangering the health and safety of the public, and (ii) that such activities will be conducted in compliance with the Commission's regulations;

   D. The issuance of this amendment will not be inimical to the common defense and security or to the health and safety of the public; and

   E. The issuance of this amendment is in accordance with 10 CFR Part 51 of the Commission's regulations and all applicable requirements have been satisfied.

2. Accordingly, the license is amended by changes to the Technical Specifications as indicated in the attachment to this license amendment, and paragraph 3.B of Facility Operating License No. DPR-41 is hereby amended to read as follows:

(B) Technical Specifications

The Technical Specifications contained in Appendix A and B, as revised through Amendment No. 105 , are hereby incorporated in the license. The licensee shall operate the facility in accordance with the Technical Specifications.

3. This license amendment is effective immediately and shall be implemented within 60 days of issuance.

FOR THE NUCLEAR REGULATORY COMMISSION

Steven A. Varga, Chief
Operating Reactors Branch #1
Division of Licensing

Attachment:
Changes to the Technical
Specifications

Date of Issuance: November 21, 1984

ATTACHMENT TO LICENSE AMENDMENT

AMENDMENT NO. 111 FACILITY OPERATING LICENSE NO. DPR-31

AMENDMENT NO. 105 FACILITY OPERATING LICENSE NO. DPR-41

DOCKET NO. 50-250 AND 50-251

Revise Appendix A as follows:

Remove Pages	Insert Pages
ii	ii
iv	iv
v	v
3.12-1	3.12-1
B3.12-1	B3.12-1
3.17-1	3.17-1
Table 3.17-1	Table 3.17-1
B3.17-1	B3.17-1
Table 4.1-2 (Sheet 2 of 3)	Table 4.1-2 (Sheet 2 of 3)
5.4-1	5.4-1

TABLE OF CONTENTS (Continued)

Section	Title	Page
3.4	Engineering Safety Features	3.4-1
	Safety Injection and RHR Systems	3.4-1
	Emergency Containment Cooling Systems	3.4-3
	Emergency Containment Filtering System	3.4-4
	Component Cooling System	3.4-4a
	Intake Cooling Water System	3.4-5
	Post Accident Containment Vent System	3.4-6
	Control Room Ventilation	3.4-6
3.5	Instrumentation	3.5-1
3.6	Chemical and Volume Control System	3.6-1
3.7	Electrical Systems	3.7-1
3.8	Steam Power Conversion Systems	3.8-1
3.9	Radioactive Materials Release	3.9-1
	Liquid Wastes	3.9-1
	Gaseous Wastes	3.9-3
	Containerized Wastes	3.9-5
3.10	Refueling	3.10-1
3.11	Miscellaneous Radioactive Materials Sources	3.11-1
3.12	Cask Handling	3.12-1
3.13	Snubbers	3.13-1
3.14	Fire Protection Systems	3.14-1
3.15	Overpressure Mitigating System	3.15-1
3.16	Reactor Coolant System Pressure Isolation Valves	3.16-1
3.17	Spent Fuel Storage	3.17-1
4.0	SURVEILLANCE REQUIREMENTS	4.1-1
4.1	Operational Safety Review	4.1-1
4.2	Reactor Coolant System In Service Inspection	4.2-1
4.3	Reactor Coolant System Integrity	4.3-1
4.4	Containment Tests	4.4-1
	Integrated Leakage Rate Test - Post Operational	4.4-1
	Local Penetration Tests	4.4-2
	Report of Test Results	4.4-2
	Isolation Valves	4.4-3
	Residual Heat Removal System	4.4-3
	Tendon Surveillance	4.4-4
	End Anchorage Concrete Surveillance	4.4-6
	Liner Surveillance	4.4-7
4.5	Safety Injection	4.5-1
4.6	Emergency Containment Cooling Systems	4.6-1
4.7	Emergency Containment Filtering and Post Accident Containment Vent Systems	4.7-1
4.8	Emergency Power System Periodic Tests	4.8-1
4.9	Main Steam Isolation Valves	4.9-1

Amendment Nos. 111 and 105

TABLE OF CONTENTS (Continued)

Section	Title	Page
B3.5	Bases for Limiting Conditions for Operation, Instrumentation	B3.5-1
B3.6	Bases for Limiting Conditions for Operation, Chemical and Volume Control System	B3.6-1
B3.7	Bases for Limiting Conditions for Operation, Electrical Systems	B3.7-1
B3.8	Bases for Limiting Conditions for Operation, Steam and Power Conversion Systems	B3.8-1
B3.9	Bases for Limiting Conditions for Operation, Radioactive Materials Release	B3.9-1
B3.10	Bases for Limiting Conditions for Operation, Refueling	B3.10-1
B3.11	Bases for Limiting Conditions for Operation, Miscellaneous Radioactive Material Sources	B3.11-1
B3.12	Bases for Limiting Conditions for Operation, Cask Handling	B3.12-1
B3.13	Bases for Limiting Conditions for Operation, Snubbers	B3.13-1
B3.14	Bases for Fire Protection System	B3.14-1
B3.15	Bases for Limiting Conditions of Operation, Overpressure Mitigating System	B3.15-1
B3.17	Bases for Limiting Conditions for Operation, Spent Fuel Storage	B3.17-1
B4.1	Bases for Operational Safety Review	B4.1-1
B4.2	Bases for Reactor Coolant System In-Service Inspection	B4.2-1
B4.3	Bases for Reactor Coolant System Integrity	B4.3-1
B4.4	Bases for Containment Tests	B4.4-1
B4.5	Bases for Safety Injection Tests	B4.5-1
B4.6	Bases for Emergency Containment Cooling System Tests	B4.6-1
B4.7	Bases for Emergency Containment Filtering and Post Accident Containment Venting Systems Tests	B4.7-1
B4.8	Bases for Emergency Power System Periodic Tests	B4.8-1
B4.9	Bases for Main Steam Isolation Valve Tests	B4.9-1
B4.10	Bases for Auxiliary Feedwater System Tests	B4.10-1
B4.11	Bases for Reactivity Anomalies	B4.11-1
B4.12	Bases for Environmental Radiation Survey	B4.12-1
B4.13	Bases for Fire Protection Systems	B4.13-1
B4.14	Bases for Snubbers	B4.14-1
B4.15	Bases for Surveillance Requirements, Overpressure Mitigating System	B4.15-1

Amendment Nos. 111 and 105

LIST OF TABLES

Table	Title
3.5-1	Instrument Operating Conditions for Reactor Trip
3.5-2	Engineering Safety Features Actuation
3.5-3	Instrument Operating Conditions for Isolation Functions
3.5-4	Engineered Safety Feature Set Points
3.13-1	Safety Related Snubbers
3.14-1	Fire Detection System
3.17-1	Spent Fuel Burnup Requirements for Storage in Region II of the Spent Fuel Pit
4.1-1	Minimum Frequencies for Checks, Calibrations and Test of Instrument Channels
4.1-2	Minimum Frequencies for Equipment and Sampling Tests
4.2-1	Reactor Coolant System In-Service Inspection Schedule
4.12-1	Operational Environmental Radiological Surveillance Program
4.12-2	Operational Environmental Radiological Surveillance Program Types of Analysis
6.2-1	Operating Personnel

3.12 CASK HANDLING

Applicability: Applies to limitations during cask handling.

Objective: To minimize the possibility of an accident during cask handling operations that would affect the health and safety of the public.

Specifications: During cask handling operations:

(1) The spent fuel cask shall not be moved into the spent fuel pit until all the spent fuel in the pit has decayed for a minimum of 1525 hours.**

(2) Only a single element cask may be moved into the spent fuel pit.

(3) A fuel assembly shall not be removed from the spent fuel pit in a shipping cask until it has decayed for a minimum of 120 days.*

(4) HEAVY LOADS shall be prohibited from travel over irradiated fuel assemblies in the spent fuel pool (refer to T.S. 3.10.10).

---

* The Region 10 fuel which was in the Unit 3 reactor during the period of April 19, 1981, through April 24, 1981, may be removed from the Unit 3 spent fuel pit in a shipping cask after a minimum decay period of ninety-five (95) days.

** The spent fuel cask can be moved into the Unit 4 Spent Fuel Pit after a minimum decay of 1000 hours until the new two-region high density spent fuel racks are installed.

B3.12 BASES FOR LIMITING CONDITIONS FOR OPERATION, CASK HANDLING

Requiring spent fuel decay time to be a minimum of 1525 hours prior to moving a spent fuel cask into the spent fuel pit will keep potential offsite doses well within 10 CFR Part 100 limits should a dropped cask strike the stored fuel assemblies.

The restriction to allow only a single element cask to be moved into the spent fuel pit will ensure the maintenance of water inventory in the unlikely event of an uncontrolled cask descent. Use of a single element cask which nominally weighs about twenty-five tons will also increase crane safety margins by about a factor of four.

Requiring the spent fuel decay time be at least 120 days prior to moving a fuel assembly outside the fuel storage pit in a shipping cask will ensure that potential offsite doses are a fraction of 10 CFR 100 limits should a dropped cask and ruptured fuel assembly release activity directly to the atmosphere.

The restriction on movement of HEAVY LOADS over irradiated fuel assemblies in the spent fuel pool ensures that in the event this load is dropped (1) the activity release will be limited to that contained in a single fuel assembly, and (2) any possible distortion of fuel in the storage racks will not result in a critical array. This assumption is consistent with the activity release assumed in the FSAR. For the purpose of this specification, HEAVY LOADS are defined as loads greater than 2000 pounds.[1] (Refer to T.S. 1.36 and T.S. B3.10)

References:

(1) FSAR Table 3.2.3-1

3.17 SPENT FUEL STORAGE

Applicability: Applies to limitations on the storage of spent fuel assemblies.

Objective: To minimize the possibility of exceeding the reactivity design limits for storage of spent fuel.

Specifications:

(1) Fuel assemblies containing more than 4.1 weight percent of U-235 shall not be placed in the single region spent fuel storage racks. After installation of the two-region high density spent fuel racks, the maximum enrichmentloading for fuel assemblies in the spent fuel racks is 4.5 weight percent of U-235.

(2) The minimum boron concentration while fuel is stored in the Spent Fuel Pit shall be 1950 ppm.

(3)* Storage in Region II of the Spent Fuel Pit shall be further restricted by burnup and enrichment limits specified in Table 3.17-1.

(4)* During the re-racking operation only, fuel that does not meet the burnup requirements for normal storage in Region II may be stored in Region II in a checkerboard arrangement (i.e., no fuel stored in adjacent spaces).

---

* This Technical Specification is applicable only after installation of the new two-region high density spent fuel racks.

TABLE 3.17-1

SPENT FUEL BURNUP REQUIREMENTS FOR STORAGE IN REGION II OF THE SPENT FUEL PIT

Initial w/o	Discharge Burnup GWD/MT
1.5	0
1.75	5.0
2.0	9.0
2.2	12.0
2.4	14.8
2.6	17.6
2.8	20.1
3.0	22.6
3.2	25.0
3.4	27.4
3.6	29.6
3.8	31.8
4.0	34.0
4.2	36.1
4.5	39.0

Linear interpolation between two consecutive points will yield conservative results.

B3.17 BASES FOR LIMITING CONDITIONS FOR OPERATION, SPENT FUEL STORAGE

1. The spent fuel storage racks provide safe subcritical storage of fuel assemblies by providing sufficient center-to-center spacing or a combination of spacing and poison to assure k_{eff} is equal to or less than 0.95 for normal operations and postulated accidents.

2.* The spent fuel racks are divided into two regions. Region I racks have a 10.6 inch center-to-center spacing and the Region II racks have a 9.0 inch center-to-center spacing. Because of the larger center-to-center spacing and poison (B^{10}) concentration of Region I cells, the only restriction for placement of fuel is that the initial fuel assembly enrichment is equal to or less than 4.5 weight percent of U-235. The limiting value of U-235 enrichment is based upon the assumptions in the spent fuel safety analyses and assures that the limiting criteria for criticality is not exceeded. Prior to placement in Region II cell locations, strict controls are employed to evaluate burnup of the spent fuel assembly. Upon determination that the fuel assembly meets the burnup requirements of Table 3.17-1, placement in a Region II cell is authorized. These positive controls assure the fuel enrichment limits assumed in the safety analyses will not be exceeded.

* This Technical Specification is applicable upon installation of the new two-region high density spent fuel racks.

TABLE 4.1-2 (Sheet 2 of 3)

MINIMUM FREQUENCIES FOR EQUIPMENT AND SAMPLING TESTS

	Check	Frequency	Max. Time Between Tests (Days)
5. Control Rods (cont'd)	Partial movement of full length rods	Biweekly while critical	20
6. Pressurizer Safety Valves	Set Point	Each refueling shutdown	NA
7. Main Steam Safety Valves	Set Point	Each refueling shutdown	NA
8. Containment Isolation Trip	Functioning	Each refueling shutdown	NA
9. Refueling System Interlocks	Functioning	Prior to each refueling	NA
10. Accumulator	Boron Concentration	At least once per 31 days and within 6 hours after each solution volume increase of $\geq$ 1% of tank volume.†	
11. Reactor Coolant System Leakage	Evaluate	Daily	NA
12. Diesel Fuel Supply	Fuel inventory	Weekly	10
13. Spent Fuel Pit	Boron Concentration	Monthly	45
14. Fire Protection Pump and Power Supply	Operable	Monthly	45
15. Turbine Stop and Control Valves, Reheater Stop and Intercept Valves	Closure	Monthly*	45
16. LP Turbine Rotor Inspector (w/o rotor disassembly)	V, MT, PT	Every 5 years	6 years
17. Spent Fuel Cask Crane Interlocks	Functioning	Within 7 days	7 days when crane is being used to maneuver spent fuel cask.

5.4 FUEL STORAGE

1. The New and Spent Fuel Pit structures are designed to withstand the anticipated earthquake loadings as Class 1 structures. Each Spent Fuel Pit has a stainless steel liner to ensure against leakage.

2. The spent fuel storage racks provide safe subcritical storage of fuel assemblies by providing sufficient center-to-center spacing or a combination of spacing and poison to assure K_{eff}, is equal to or less than 0.95 for normal operations and postulated accidents. Fuel assemblies containing more than 4.1 weight percent of U-235 shall not be placed in the single region spent fuel storage racks. After installation of the two-region high density spent fuel racks, the maximum enrichment loading for fuel assemblies in the spent fuel racks is 4.5 weight percent of U-235.

   The racks for new fuel storage are designed to store fuel in a safe subcritical array. The fuel is stored vertically in an array with sufficient center-to-center spacing to assure K_{eff} equal to or less than 0.98 for optimum moderation conditions and equal to or less than 0.95 for fully flooded conditions. Fuel containing more than 4.5 weight percent of U-235 shall not be placed in the New Fuel Storage Area.

3. Credit for burnup is taken in determining placement locations for spent fuel in the two-region spent fuel racks.* Strict administrative controls are employed to evaluate the burnup of each spent fuel assembly stored in areas where credit for burnup is taken. The burnup of spent fuel is ascertained by careful analysis of burnup history, prior to placement into the storage locations. Procedures shall require an independent check of the analysis of suitability for storage. A complete record of such analysis is kept for the time period that the spent fuel assembly remains in storage onsite.

---

* During rack installation, it will be necessary to temporarily store Region I fuel in the Region II spent fuel racks. Strict administrative controls will be utilized to maintain a checkerboard storage configuration, i.e., alternate cell occupation, in the Region II racks.

UNITED STATES
NUCLEAR REGULATORY COMMISSION
WASHINGTON, D. C. 20555

SAFETY EVALUATION BY THE OFFICE OF NUCLEAR REACTOR REGULATION

RELATED TO AMENDMENT NO. 111 TO FACILITY OPERATING LICENSE NO. DPR-31

AND AMENDMENT NO. 105 TO FACILITY OPERATING LICENSE NO. DPR-41

FLORIDA POWER AND LIGHT COMPANY

TURKEY POINT UNIT NOS. 3 AND 4

DOCKET NOS. 50-250 AND 50-251

1.0 Introduction

By letter dated March 14, 1984 and supplemented on July 2 and 23, August 14 and 22, September 10 and 28, October 5, 9, 18 and 26, and November 16, 1984. Florida Power and Light Company (FP&L) submitted an application to increase the storage capacity of the spent fuel pools (SFPs) for Turkey Point, Units 3 and 4, by replacing the existing racks with new storage racks. Amendment 20 to Facility Operating License DPR-31, dated September 24, 1976, temporarily allowed the storage capacity of the Unit 3 SFP to be increased from 217 to 235 fuel assemblies. Amendment Nos. 23 and 22 for Units 3 and 4, respectively, dated March 17, 1977, increased the SFP storage capacity at each facility to 621 fuel assemblies.

1.1 Discussion

These proposed amendments will allow the licensee to expand the SFPs from the current capacity of 621 fuel assemblies to 1404 fuel assemblies. This expansion will be accomplished by reracking the existing SFPs with neutron absorbing (poison) spent fuel racks composed of individual cells made of stainless steel. The new spent fuel storage racks will be arranged in two discrete regions within each pool. Region 1 will consist of 286 locations which will normally be used for storage of spent fuel with an enrichment equal to or less than 4.5% U-235 at it's most reactive point in life. Region 2 will consist of 1118 locations and will provide storage for spent fuel assemblies meeting required burnup considerations.

The existing fuel storage racks (621 locations) have a nominal centerline-to-centerline spacing of 13.7 inches. The new Region 1 racks will have a 10.6 inch centerline-to-centerline spacing and Region 2 will be 9.0 inches centerline-to-centerline spacing. The major components of the fuel rack assemblies are the fuel assembly cell, boraflex (neutron absorbing) material and the wrapper. The wrapper covers the Boraflex material and provides venting of the Boraflex to the pool environment.

The existing racks have 636 total storage cells; however due to piping and other interferences the Unit 3 racks have 621 usable cells and the Unit 4 racks have 614 usable cells. In the 1986-1987 time frame, the units will lose their full-core reserve storage capacity (157 assemblies) and in

8412070195 841121
PDR ADOCK 05000250
P PDR

1990-1991 time frame they will no longer have the capacity to store fuel discharged from the operating units. Since these dates are earlier than the date a federal depository should be available for spent fuel (1998),** additional capacity for the storage of spent fuel is needed.

Increasing the SFPs capacity to 1404 cells, as proposed, will allow plant operation with full core reserve in the SFPs to about the year 2005 for Unit 4 and 2006 for Unit 3. These time frames are based on the present FP&L fuel management. The proposed expansion of the SFP storage racks to 1404 cells should be adequate until the federal government begins accepting spent fuel from civilian power reactors.

2.0 Evaluation

The "Spent Fuel Storage Facility Modification Safety Analysis Report" provided by the licensee on March 14, 1984, in support of this application for amendments was the basis for the NRC staff evaluation. Supplemental information provided by the licensee is also reflected in the following Safety Evaluation which summarizes the NRC staff effort.

2.1 Criticality Considerations

Each pool will contain racks that provide 1404 designated locations for the storage of reactor fuel. The storage racks will be divided between two regions - one containing 286 locations and one containing 1118. The smaller region, having sufficient capacity for approximately 1 1/2 full cores, will be used for the storage of fresh fuel and fuel not suitable for Region 2. The larger region will normally be restricted to fuel having a specified minimum burnup. The licensee proposed that, during installation of the new racks, storage of high reactivity spent fuel (up to fresh 4.5 percent enrichment) be permitted in a checkerboard array with every other location empty. Administrative controls will be used to prevent storage in the empty locations.

The Region 1 racks will consist of stainless steel cans of 8.75 inch square interior dimension and 0.75 inch wall thickness. On the outer surface of each side of the cans Boraflex sheets having a minimum area density of 0.02 grams per square centimeter of B-10 are held in place by a thin-walled stainless steel wrapper plate. The rack structure maintains these cans on a 10.6 inch center-to-center spacing.

The Region 2 rack design consists of stainless steel cans welded together to form a honeycomb type structure. The cans have an interior square dimension of 8.80 inches and are made of stainless steel.

**Nuclear Waste Policy Act of 1982, Section 302(a)(5)

All four sides of interior cans have Boraflex sheets containing 0.012 grams of B-10 per square centimeter of surface area that are held in place by a stainless steel wrapper which is spot welded to the can. The resulting structure maintains the stored fuel assemblies at a center-to-center spacing of 9.0 inches.

2.1.1 Calculation Methods

The calculation of the effective multiplication factor, K_{eff}, for Region 1 makes use of the AMPX system of codes for neutron cross-section preparation and the Monte-Carlo Code KENO-IV for reactivity. This code set has been verified against a set of 27 critical experiments that simulate various features of the rack design. A calculational method bias of zero and uncertainty of 0.013 based on a 95 percent probability at the 95 percent confidence level (95/95) was inferred from these comparisons.

The calculation of the criterion for acceptable burnup for storage in Region 2 makes use of the concept of reactivity equivalence. Since the KENO-IV code cannot handle burned fuel assemblies it is necessary to obtain the fresh fuel assembly enrichment which yields the same pool K_{eff} as the burned assembly. Because of the presence of the poison in the Region 2 racks, a multigroup transport theory code is more appropriate than diffusion theory for this calculation. The PHOENIX code was used.

The calculation proceeds as follows:

1. An end-point of 39.0 GWD/MT burnup for a bundle having an initial enrichment of 4.5 weight percent U-235 is chosen.

2. PHOENIX is used to calculate the K_∞ of such an assembly in the rack geometry (including can and Boraflex absorber).

3. The burnup required to produce the same K_∞ is calculated for a number of smaller enrichments.

4. The enrichment required to produce the same K_∞ without burnup is obtained (in the present case the value is 1.5 weight percent U-235).

5. KENO-IV is used to calculate the rack multiplication factor for the 1.5 weight percent enrichment assembly.

The advantage of this procedure is that only relative multiplication factors are computed by PHOENIX. The final value of the rack multiplication factor is obtained from the more powerful KENO-IV code.

2.1.2 Treatment of Uncertainties

For the Region 1 analysis the total uncertainty is the statistical combination of the method uncertainty, the uncertainty in the particular KENO calculation, and mechanical uncertainties due to tolerances, spacing, etc. The mechanical uncertainties were treated either by making worst case

assumptions (e.g., using the minimum rather than nominal value of the boron loading) or by performing sensitivity studies and obtaining a value of the uncertainty in rack multiplication factor due to uncertainty in dimensions, etc.

In the Region 2 analysis the same uncertainties are considered along with others that are unique to the rack design and usage. These include uncertainty due to particle self-shielding in the boron (actually bias), uncertainty in the plutonium reactivity and uncertainty in the reactivity as a function of burnup. Including both the plutonium and burnup reactivity uncertainties is conservative since the latter includes the former as one of its components.

The PHOENIX code was qualified for burnup calculations by comparing calculated isotopic ratios to measurements made in Yankee-Rowe Core 5, and by comparison of equivalent reactivity burnup between PHOENIX and the LEOPARD/TURTLE codes.

A set of 81 critical experiments was analyzed to qualify the code for zero burnup conditions. Conservative uncertainties of 5 percent of the reactivity change due to burnup have been assigned to these parameters.

2.1.3 Results of Analysis

Normal Storage

For Region 1, the rack multiplication factor is calculated to be 0.9403, including uncertainties at least at the 95/95 level, when fuel having an enrichment of 4.5 weight percent U-235 is stored therein. Fuel of either the Westinghouse 15X15 standard or OFA design may be stored as well as Combustion Engineering 14X14 or 16X16 and Exxon 14X14 designs. Pure water at 1.0 grams per cubic centimeter is assumed.

For Region 2, the rack multiplication factor is 0.9304 for the most reactive irradiated fuel permitted to be stored in the racks, i.e., fuel with the minimum burnup permitted for each initial enrichment, including at least 95/95 uncertainties. For fresh fuel (4.5 percent enrichment) stored in a checkerboard array in the racks, the effective multiplication factor is 0.8342. Calculation of the remaining uncertainties was not deemed necessary in this case since assuming conservative values for these terms would still result in a final K_{eff} for the checkerboard configuration well below the required 0.95. All calculations are obtained for pure water at a density of 1.0 grams per cubic centimeter. Burned fuel of the same designs as allowed in Region 1 may be stored in Region 2. Analyses were performed for all allowable fuel types and the proposed curve of burnup versus initial enrichment bounds the results of the calculation.

Abnormal Storage Conditions

Most abnormal storage conditions will not result in an increase in K_{eff} of the racks. For example, loss of a cooling system will result in an increase in pool temperature but this causes a decrease in the K_{eff} value.

It is possible to postulate events (e.g., a seismic event) which could lead to an increase in pool reactivity. However for such events credit may be taken for the approximately 1950 ppm of boron in the pool water. The reduction in the K_{eff} value caused by the boron (approximately 0.25) more than offsets the reactivity addition caused by credible accidents.

2.1.4 Summary of Evaluation

The following discussion summarizes our evaluation of the proposed re-racking of the Turkey Point SFPs.

We have reviewed the assumptions made in the performance of the criticality analyses. These include use of the highest permitted reactivity bundle, pure water moderator at a density of 1.0 gram per cubic centimeter, and an infinite array of assemblies. These are consistent with NRC guidelines and are acceptable.

We have reviewed the uncertainties which have been included. For Region 1, these include variation in poison pocket thickness, stainless steel thickness, cell interior dimensions, center-to-center spacing, boron particle self shielding, and cell bowing. Other parameters, such as boron loading, are taken at their most conservative limits. For Region 2, additional uncertainties due to burnup calculations and calculations of plutonium worth are included. For both regions,calculational uncertainties and biases are included. These uncertainties meet our requirements and are acceptable.

We have reviewed the verification of the calculation methods. The KENO-IV code is widely used in the industry for the purpose of calculating fuel rack criticality. The set of benchmark critical experiments used to verify the calculations method encompasses the enrichment, separation distance and separating material used in the racks.

The set of experiments used to verify the PHOENIX code for the reactivity equivalence calculations is adequate and encompassed the pellet size and enrichment of the fuel proposed for storage in the Turkey Point racks. The uncertainties in the burnup and plutonium worth are verified against Yankee Core 5 isotopics and comparisons with the Westinghouse design LEOPARD/TURTLE code package. We find that adequate verification of the codes used in the criticality analyses has been performed.

The technique of using reactivity equivalencing to define the storage criterion (burnup as a function of initial enrichment) is, in some form, in widespread use in the industry and is acceptable.

For Region 1 racks we have compared the results of the Turkey Point calculation to a generic study and found them to be compatible. Finally the results of the calculation for Region 1 and 2 meet our acceptance criterion of less than or equal to 0.95 including all uncertainties at the 95/95 level.

We have reviewed the proposed Technical Specifications 3.17, B3.17, and 5.4 and find that they are consistent with the assumptions in the safety analysis and are acceptable.

2.15. Conclusions

Based on our review, which is described above, we find the criticality aspects of the design of the spent fuel racks to be acceptable. We conclude that fresh Westinghouse 15X15 fuel of either the standard or OFA design as well as Combustion Engineering 14X14 or 16X16 and Exxon 14X14 designs may be safely stored in Region 1 so long as enrichment does not exceed 4.5 w/o U-235. We further conclude that any of these fuel types may be stored in Region 2 provided it meets the burnup and enrichment limits specified in Table 3.17-1 of the Turkey Point Units 3 and 4 Technical Specifications.

During the installation of the new racks, fuel which does not meet this criterion may be stored in Region 2 provided it is stored in a checkerboard arrangement with every other location vacant.

2.2 Materials

The safety function of the SFP and storage rack system is to maintain the spent fuel assemblies in a subcritical array during all credible storage conditions. We have reviewed the compatibility and chemical stability of the materials, except the fuel assemblies, wetted by the pool water.

The only new material or components to be added during the proposed modification are the nuclear absorber strips. The new spent fuel racks to be installed in both regions are constructed entirely of Type 304 stainless steel, except for the nuclear poison material. The existing spent fuel liner is constructed of stainless steel. The high density spent fuel storage racks will utilize Boraflex[1] sheets as a neutron absorber. Boraflex has previously been approved as a neutron absorber and is currently being used in several SFP storage facilities. Boraflex consists of boron carbide powder in a rubber-like silicone polymeric matrix. The spent fuel storage rack configuration is composed of individual storage cells interconnected to form an integral structure. The major components of the assembly are the fuel assembly cells, the Boraflex material, and the stainless steel wrapper around the Boraflex.

The Boraflex absorber will not be sealed within the storage cell and vent paths for any gas generated during exposure will be available to the pool. The pool contains oxygen-saturated demineralized water containing boric acid. The water chemistry control of the spent fuel pool has been reviewed elsewhere and found to meet NRC recommendations.

2.2.1 Corrosion and Material Compatibility

The pool liner, rack lattice structure and fuel storage tubes are stainless steel which is compatible with the storage pool environment. In this environment of oxygen-saturated borated water, the corrosive deterioration of the Type 304 stainless steel should not exceed a depth of 6.00×10^{-5} inches in 100 years, which is negligible relative to the initial thickness[2]. Dissimilar metal contact corrosion (galvanic attack) between the stainless steel of the pool liner, rack lattice structure, fuel storage tubes, and the

Inconel and the Zircaloy in the spent fuel assemblies will not be significant because all of these materials are protected by highly passivating oxide films and are therefore at similar potentials. The Boraflex is composed of non-metallic materials and therefore will not develop a galvanic potential in contact with the metal components. Boraflex has undergone extensive testing to study the effects of gamma irradiation in various environments, and to verify its structural integrity and suitability as a neutron absorbing material. The evaluation tests have shown that the Boraflex is unaffected by the pool water environment and will not be degraded by corrosion. Tests were performed at the University of Michigan[3], exposing Boraflex to 1.103×10^{11} rads of gamma radiation with substantial concurrent neutron flux in borated water. These tests indicate that Boraflex maintains its neutron attenuation capabilities after being subjected to an environment of borated water and gamma irradiation. Irradiation will cause some loss of flexibility, but will not lead to break up of the Boraflex. Long term borated water soak tests at high temperatures were also conducted[4]. The tests show that Boraflex withstands a borated water immersion of 240°F for 260 days without visible distortion or softening. The Boraflex showed no evidence of swelling or loss of ability to maintain a uniform distribution of boron carbide. The space which contains the Boraflex is vented to the pool at each storage tube assembly. This venting will allow gas generated by the chemical degradation of the silicone polymer binder during heating and irradiation to escape, and will prevent bulging or swelling of the inner stainless steel wrapper.

The tests have shown that neither irradiation, environment nor Boraflex composition has a discernible effect on the neutron transmission of the Boraflex material. The tests also show that Boraflex does not possess leachable halogens that might be released into the pool environment in the presence of elemental boron from the Boraflex. Boron carbide of the grade normally in the Boraflex will typically contain 0.1 wt.% of soluble boron. The test results have confirmed the encapsulation function of the silicone polymer matrix in preventing the leaching of soluble species from the boron carbide.

To provide added assurance that no unexpected corrosion or degradation of materials will compromise the integrity of the racks, the licensee has committed to conduct a long term poison coupon surveillance program, which will be representative of the material used in both the Region 1 and Region 2 locations. There will be four sets of coupons, each containing not less than 24 jacketed poison coupons, each set will be designed to be hung on the outside periphery of Region 1 and Region 2 modules. The initial surveillance of the specimens will be performed after approximately five years of exposure to the pool environments. Subsequent surveillances will be based on the initial results to assure acceptable material performance throughout the life of the plant.

Construction materials will conform to the requirements of the ASME Boiler and Pressure Vessel Code Section II-NP.

2.2.2 Conclusion

From our evaluation as discussed above, we conclude that the corrosion that will occur in the SFP environment should be of little significance during the life of the plant. Components in the SFPs are constructed of alloys which have a low differential galvanic potential between them and have a high resistance to general corrosion, localized corrosion, and galvanic corrosion. Tests under irradiation and at elevated temperatures in borated water indicate that the boraflex material will not undergo significant degradation during the expected service life.

We further conclude that the environmental compatibility and stability of the materials used in the expanded SFPs is adequate based on the test data cited above and actual service experience in operation reactors.

We have reviewed the licensee's surveillance program and conclude that the monitoring of materials in the SFPs will provide reasonable assurance that the Boraflex material will continue to perform its function for the life of the pools. The materials surveillance program will reveal any instance of deterioration of the Boraflex that might lead to the loss of neutron absorbing power well before significant deterioration will occur. We do not anticipate, however, that such deterioration will occur.

We, therefore, conclude that the compatibility of the materials and coolant used in the SFPs is adequate based on tests, data, and actual service experience in operating reactors, and the selection of of appropriate materials and adoption of a surveillance program by the licensee meets the requirements of 10 CFR Part 50, Appendix A, Criterion 61, having a capability to permit appropriate periodic inspection and testing of components and criterion 62, preventing criticality by maintaining structural integrity of the components and boron poison and is, therefore, acceptable.

2.2.3 References - Materials

1. J. S. Anderson, "Boraflex Neutron Shielding Material -- Product Performance Date," Brand Industries, Inc., Report 748-30-1, (August 1979).

2. J. R. Weeks, "Corrosion of Materials in Spent Fuel Storage Pools." BNL-NUREG-23021, July 1977.

3. J. S. Anderson, "Irradiation Study of Boraflex Neutron Shielding Materials," Brand Industries, Inc., Report 748-10-1, (August 1981).

4. J. S. Anderson, "A Final Report on the Effects of High Temperature Borated Water Exposure on BISCO Boraflex Neutron Absorbing Materials," Brand Industries, Inc., Report 748-21-1, (August 1978).

2.3 Structural Design

Our evaluation of the structural aspects of the proposed modifications are based on a review performed by the staff's consultant, Franklin Research Center (FRC). The FRC Technical Evaluation Report, TER-C5506-529, is appended

to this Safety Evaluation and provides additional details relating to the structural evaluation.

2.3.1 Description of the Spent Fuel Pools and Racks

There are two SFPs at Turkey Point, one for each unit. They are constructed of reinforced concrete whose walls and floors are lined with a 1/4 inch-thick water tight stainless steel liner. The fuel assembly storage area is approximately 41'-4" wide by 25'-4" long. Wall thicknesses are 5'-6" on three sides and 4'-0" on the fourth side. The floors of the pools are supported directly on foundation soil.

The Region 1 storage racks are composed of individual storage cells made of stainless steel. The cells within a module are interconnected by grid assemblies to form an integral structure. Each rack module is provided with leveling pads which contact the SFP floor and are remotely adjustable from above throughout the cells at installation. The modules are freestanding and are not anchored to floor nor braced to the pool walls. The fuel rack assembly consists of three major sections which are the leveling pad assembly, the lower and upper grid assemblies, and the cell assembly.

The Region 2 storage racks consist of stainless steel cells assembled in a checkerboard pattern, producing a honeycomb type structure. The cells are welded to a base support assembly and to one another to form an integral structure without the use of grids which are used in the Region 1 racks. This design is also provided with leveling pads which contact the SFP floor and are remotely adjustable from above through the cells at installation. The modules are free standing and are not anchored to the floor nor braced to the pool walls. The fuel rack module consists of two major sections which are the base support assembly and the cell assembly.

2.3.2 Applicable Codes, Standards and Specifications

Load combinations and acceptance criteria were compared with those found in the "Staff Position for Review and Acceptance of Spent Fuel Storage and Handling Applications" dated April 14, 1978 and amended January 18, 1979. The existing concrete pool structure was evaluated for the new loads in accordance with the requirements of the Turkey Point FSAR Section 3.8.4.

2.3.3 Loads and Load Combinations

Loads and load combinations for the racks and the pool structure were reviewed and found to be in agreement with the applicable portions of the staff position and the Turkey Point FSAR as identified in Section 2.3.2 of this SE. Additional details are provided in the Appended TER.

2.3.4 Seismic and Impact Loads

Seismic loads for the rack design are based on the original design floor acceleration response spectra calculated for the plant at the licensing stage. This was based on a 0.05g operating basis earthquake (OBE) and a 0.15g safe shutdown earthquake (SSE). The seismic loads were applied to the model in three orthogonal directions. Loads due to a fuel bundle drop

accident were considered in a separate analysis. The postulated loads from these events were found to be acceptable. Additional, description and details are provided in the appended TER.

2.3.5 Design Analysis of Procedures

a. Design and Analysis of the Racks

The dynamic response and internal stresses and loads are obtained from a seismic analysis which is performed in two phases. The first phase is a time history analysis on a simplified nonlinear finite element model. The second phase is a response spectrum analysis of a detailed linear three dimensional rack assembly finite element model. Two percent damping is used in the seismic analysis for both the OBE and SSE. Further details on the methodology is discussed in the appended TER.

Calculated stresses for the rack components were found to be within allowable limits. The racks were found to have adequate margins against sliding and tipping.

An analysis was conducted to assess the potential effects of a dropped fuel assembly on the racks and results were considered satisfactory.

An analysis was conducted to assess the potential effects of a stuck fuel assembly causing an uplift load on the racks and a corresponding downward load on the lifting device as well as a tension load in the fuel assembly. Resulting stresses were found to be within acceptance limits.

b. Analysis of the Pool Structures

The SFPs are reinforced concrete plate structures supported on compacted limerock fill. The SFP walls are lined with 1/4-in. stainless steel liners. These existing structures were analyzed for the modified fuel rack loads using a finite element computer program. Original plant response spectra and damping values were used in consideration of the seismic loadings. Design criteria, including loading combinations and allowable stresses, are in compliance with Turkey Point FSAR Appendix 5A and the existing SFPs are determined to safely support the loads generated by the new fuel racks.

2.3.6 Conclusions

Based on the above and appended TER, the staff concludes that the proposed rack installation will satisfy the requirements of 10 CFR 50, Appendix A (GDC 2, 4, 61 and 62), as applicable to structures.

2.4 Installation of Racks and Load Handling

There is spent fuel in both Turkey Point Unit 3 and 4 SFPs. A temporary crane will be used to move the racks into and out of the SFPs. The movement of the temporary crane will be over the exclusion areas as defined in the licensee's Phase I submittal for NUREG-0612, "Control of Heavy Loads at Nuclear Power Plants." However, the licensee has performed a load drop analysis which indicates that the consequences of a postulated load drop or

temporary construction crane drop would be bounded by the cask drop accident. Furthermore the licensee has re-evaluated the cask drop accident using the assumption that all of the spent fuel in the pool was damaged and the newest fuel in the pool had been cooled for at least 1525 hours. Technical Specification 3.12 has been revised to require a decay time of 1525 hours for all fuel in the spent fuel pool prior to cask handling operations. This evaluation is conservative in that not all of the fuel would be damaged in a real cask drop accident.

The NRC staff's independent evaluation of the cask drop accident in support of the existing SFP racks dated March 17, 1977, resulted in conservatively estimated two-hour radiation doses at the exclusion area boundary (EAB) of 24 Rem to the tyroid and less than 1 Rem to the whole body. Our independent evaluation of the cask drop for the proposed SFP reracks resulted in conservatively estimated two-hour radiation doses at the EAB of 26 Rem to the thyroid and less than 1 Rem to the whole body. The slight increase to the thyroid is insignificant when comparted to the 10 CFR 100 guidelines for the two-hour dose of 300 Rem to the thyroid and the 1 Rem to the whole body, in both cases, is significantly less than the two-hour dose of 25 Rem whole body provided in the 10 CFR 100 guidelines.

Based on the above, the staff concludes that load handling accidents associated with these SFP modifications will not have any adverse consequences as identified in NUREG-0612, are well within the 10 CFR 100 guidelines, and are acceptable.

2.5 Radiological Consequences of Accident Involving Postulated Mechanical Damage to the Spent Fuel

This portion of the staff's review was conducted in accordance with the guidance provided in NUREG-0800 "Standard Review Plan", Section 15.7.4, NUREG-0612, and NUREG-0554 with respect to the accident assumptions.

For evaluation of accidents involving the spent fuel pool, three types of accidents were considered; a cask drop or tip, a construction accident during rack replacement and a fuel assembly drop while handling fuel. As noted in Section 2.4 of this SE, the effects of a postulated load drop are bounded by the cask drop accident.

2.5.1 Cask Drop/Tip Accidents

Proposed technical specification 3.12 will require a minimum of 1525 hours of decay for all spent fuel stored in either pool prior to cask handling operations. A conservative estimate of damage to stored spent fuel assemblies would be from impact of a cask which is sufficient to damage 91 assemblies (in the appropriate strike sector) and result in the release of their concomitant volatile gap activities. In performing our independent accident radiological consequences analysis, we assumed that the fuel has been discharged from the reactor after operation at a steady-state power level of 2300 MW_{th} for an extended period of time. The calculated (0-2 hr.) offsite accident radiological consequences are estimated to be 26 Rem thyroid and less than 0.1 Rem whole body at the Exclusion Area Boundary. These consequences are well within the radiological guideline values

specified in 10 CFR 100. See Section 2.4 of this SE for additional details. Radiological consequences at the Low Population Zone Boundary (LPZ) are commensurately less than those at the Exclusion Area Boundary (EAB).

2.5.2 Construction Accidents

For purposes of ensuring that a conservative estimate of damage to stored fuel assemblies from impact of an unspecified object in a non-mechanistically defined construction accident is made, sufficient damage to 157 assemblies (a full core offload) to result in the release of their concomitant volatile gap activities was postulated conservatively. The licensee has indicated in their submittals that the reracking operation will take place no sooner than 2150 hours after shutdown for the last batch of spent fuel placed in the SFP. This is to compensate for an 8 ft. water level reduction in the spent fuel pool during rack handling operations. The additional cooldown time compensates for a reduction in pool iodine decontamination factor from 100 to 10 during this period, based upon staff analyses used to determine the Regulatory Guide 1.25 value of 100 for a 23 foot water depth. In performing our independent accident radiological consequence analysis, we assumed that the fuel has been discharged from the reactor after operation at a steady-state power level of 2300 MW_{th} for an extended period of time. The calculated (0-2 hr.) offsite accident radiological consequences are estimated to be 45 Rem thyroid and 0.5 Rem whole body at the EAB. These consequences are well within the guidelines of 10 CFR 100. Radiological consequences at the LPZ are commensurately less than those at the EAB.

2.5.3 Fuel Handling Accident

The postulated fuel handling accident is not directly related to the rereacking application. The fuel handling accident involves the release of the equivalent gap activity of one assembly recently discharged from the reactor for the current fuel exposure of 50,000 Mwd/t.

In performing our independent radiological consequence analysis for the fuel handling accident, we assumed that the fuel has been discharged from the reactor after operation at a steady-state power level of 2300 MW_{th} for an extended period of time. The calculated (0-2 hr.) offsite accident radiological consequences are estimated to be 30 Rem thyroid and 0.1 Rem whole body at the EAB, well within the guidelines of 10 CFR 100 for the two-hour dose of 300 Rem to the thyroid and 25 Rem to the whole body at the EAB. Radiological consequences at the LPZ are commensurately less than those at the EAB.

2.5.4 Conclusions

The staff concludes that a cask drop/tip or construction accident resulting in damage to either ninety-one 50,000 MWd/t spent fuel assemblies or 157 similar assemblies with at least 1525 hours and 2150 hours of cooldown time, respectively, will result in atmospheric radionuclide releases with consequences which are well within the dose guidelines of 10 CFR 100.

Additionally, the staff concludes that a fuel handling accident resulting in damage to a recently discharge 50,000 MWd/t spent fuel assembly will result in atmospheric radionuclide releases which are well within the dose guidelines of 10 CFR 100.

2.6 Occupational Radiation Exposure

The occupational exposure for the licensee's plan for the removal and disposal for the high density racks, and installation of the higher density racks is approximately 59 person-rems. This estimate is based on the licensee's detailed breakdown of occupational exposure for each phase of the modification. The licensee considered the number of individuals performing a specific job, their occupancy time while performing this job, and the average dose rate in the area where the job is being performed. The spent fuel assemblies themselves contribute a negligible amount to dose rates in the pool area because of the depth of water shielding the fuel.

One potential source of radiation is radioactive activation or corrosion products called crud. Crud may be released to the pool water because of fuel movements during the proposed SFP modifications. This could increase radiation levels in the vicinity of the pools. During refuelings, when the spent fuel is first moved into the fuel pool, the addition of crud to the pool water from the fuel assembly and from the introduction of primary coolant to the pool water is greatest. However, the licensee does not expect to have significant releases of crud to the pool water during modification of the pool. Another source of radioactivity in the SFP water is fission products. The fission products are released through minute defects in the fuel cladding and are significantly reduced when removed from the reactor vessel and are no longer being irradiated. The purification system for the pool, which has kept radiation levels in the vicinity of the pool to low levels, includes filters and demineralizers to remove crud and radionuclides. The purification systems will be operating during the modification of the pools. FPL's operating experiences has shown that the storage of additional fuel due to reracking will not contribute to the amount of crud released to the pool. If crud deposits should become a significant contributor to pool doses, measures will be taken to reduce such doses to ALARA.

The licensee has presented two alternative plans for removal and disposal of the old racks. These are (1) to decontaminate and dispose of as radioactive waste for burial or (2) decontaminate and dispose of as nonradioactive waste in accordance with existing Turkey Point health physics procedures. The old racks will be rinsed by hydrolasing to remove any loose contamination. This operation will be performed underwater to minimize airborne radioactivity levels. In any event, the disposal methodology will follow ALARA guidelines for each of the alternatives.

Divers will not be used during the reracking operation and no underwater work will be necessary except some simple manipulations which can be performed from above the surface of the pool using special tools. If divers are needed, detailed procedures will be developed and submitted to the staff for review.

The licensee has taken measures to ensure that personnel exposures during the SFP modifications are ALARA. These measures are described in the licensee's radiation protection program which assures compliance with established procedures to maintain doses ALARA. FPL's radiation protection program was reviewed prior to the last rerack and was determined adequate and acceptable by the staff.

Based on the manner in which the licensee will perform their modifications, their radiation protection program, including area and airborne radioactivity monitoring, and relevant experience from other operating reactors that have performed similar SPF modifications, the staff concludes that the licensee's SFP modifications can be performed in a manner that will ensure as low as is reasonably achievable (ALARA) exposures to workers.

We have estimated the increment in onsite occupational dose during normal operations after the pool modifications resulting from the proposed increase in storage fuel assemblies. This estimate is based on information supplied by the licensee for occupancy times and for dose rates in the spent fuel area from radionuclide concentrations in the SFP water. The spent fuel assemblies themselves contribute a negligible amount to dose rates in the pool area because of the depth of water shielding the fuel. Based on present and projected operation, we estimate that the proposed modification should add less than one percent to the total annual occupational exposure of 870 person rem/year/unit (for the years 1970-1982).

2.6 Conclusion

The basis of our acceptance of Turkey Point's occupational dose control programs is that doses to personnel will be maintained within the limits of 10 CFR 20 "Standards for Protection Against Radiation", and as low as is reasonably achievable. Based on present and projected operations in the SFP area, we estimate that the proposed modifications should add less than one percent to the total annual occupational radiation exposure at both units. The small increase in radiation exposure should not affect the licensee's ability to maintain individual occupational doses to as low as is reasonably achievable levels and within the limits of 10 CFR 20. Thus, we conclude that storing additional fuel in the two pools will not result in any significant increase in doses received by workers.

2.7 Spent Fuel Pool Cooling and Makeup Systems

Each SFP cooling loop consists of a pump, heat exchanger, filter, demineralizer, piping, and associated valves and instrumentation. The pump draws water from the SFP pit, circulates it through the heat exchanger, and returns it to the pit. Component Cooling Water cools the heat exchanger. Redundancy of this equipment is not required because of the large heat capacity of the pit and its corresponding slow heat-up rate. Nonetheless, a 100-percent-capacity spare pump which is permanently piped into the SFP cooling system has been installed. This pump is capable of operating in place of the originally installed pump, but not in parallel with the originally installed pump. Also, alternate connections are provided for connecting a temporary pump to the spent fuel pit loop.

The existing cooling systems for the SFPs are not safety grade and there are no connections to the shutdown cooling system or other safety related cooling systems. Therefore in accordance with the Standard Review Plan Section 9.1.3, we assumed that all pool cooling would be lost following a safe shutdown earthquake. Assuming the loss of cooling, boiling would occur after 7.6 hours for the normal heat load condition and after 1.6 hours for the maximum heat load condition for the new racks. This would result in a boil off rate of 37.0 and 72.0 gpm, respectively. The licensee has committed to upgrade the SFP cooling systems such that they will remain functional after a safe shutdown earthquake. The SFPs will be analyzed and modified, as necessary, to assure that the cooling function is not lost as the result of the seismic event. The design, procurement, and construction associated with this upgrade will be completed by the end of the second refueling outage after issuance of approval for the re-racking of the SFPs.

The structural considerations of the thermal loads imposed by a pool water temperature of 212°F on the steel liners and the concrete have been reviewed by the Structural Engineering Branch. The resulting tensil stress is 38 ksi versus the allowable value of 36 ksi. However, realizing the self-relieving nature of the thermal stresses and further acknowledging that the section in general remains elastic, pool function and structural integrity are maintained. See Section 3.4.3 of the appended TER for further details. The radiological effects have been reviewed by the Accident Evaluation Branch. An independent accident evaluation of the radiological consequences of SFP boiling was performed. The offsite radiological consequences were found to be a small fraction of the 10 CFR 100 guidelines, provided that sufficient make up water capacity is available.

The proposed rerack will result in no significant change in the time to boiling under the presently authorized storage. Until the upgrade is complete the amount of fuel that will be stored will be less than the capacity of the existing racks. Multiple alternate means of makeup water are available until seismically upgraded. Temporary connections can be provided from the fire water system or from the primary water storage tank. Additionally, there are two firehouses nearby such that, should a safe shutdown earthquake occur before the upgraded cooling system is operational, fire engines could be available in less than an hour and provide makeup water to the pools. Thus, adequate time is available to provide the necessary makeup water.

2.7.1 Support Systems

The SFP cooling system heat exchangers are cooled by the component cooling water systems. The component cooling water system heat exchangers are cooled by the service water systems. The licensee proposed no modifications to these two systems as part of this spent fuel pool expansion project. These systems were a reviewed as to their adequacy to remove the additional heat load and were found to be capable of removing the additional heat.

2.7.2 Decay Heat Loads

The licensee's calculated spent fuel discharge heat load to the pools, which was determined in accordance with the Branch Technical Position ASB 9-2,

"Residual Decay Energy for Light Water Reactors for Long Term Cooling", and the Standard Review Plan Section 9.1.3, "Spent Fuel Pool Cooling and Cleanup System", indicates that the expected maximum normal heat load following the last refueling will be 17.9 MBTU/Hr. This heat load will result in a maximum bulk pool temperature of less than 143°F. This normal pool temperature (143°F) is higher than the acceptance criteria of 140°F as defined in the Standard Review Plan, however, it is acceptable because the heat load calculations considered each reload to consist of one half of a core instead of the actual reloads being thirds of a core. Had the calculations been performed using the third core reloads, the pool temperature would have been less than the 140°F. The expected maximum abnormal heat load following a full core discharge is 35.0 MBTU/Hr. This abnormal heat load results in a maximum bulk pool temperature of less than 183°F which is below boiling (212°F) and within the acceptance criteria identified above.

2.7.3 Conclusions

Based on the above, we have concluded that the proposed overall SFP modifications are acceptable with respect to the storage rack capacities, the SFP cooling system capabilities, support system capabilities, the heat loads and pool water temperatures.

2.8 Radioactive Waste Treatments

The Turkey Point plant contains radioactive waste treatment systems designed to collect and process the gaseous, liquid, and solid wastes that might contain radioactive material. The radioactive waste treatment systems were evaluated in the Safety Evaluation dated March 1972, in support of the issuance of the Operating Licenses. There will be no change in the conclusions given regarding the evaluation of these systems because of the proposed spent fuel pool rerack.

2.8.1 Conclusion

Our evaluation of the radiological considerations supports the conclusion that the proposed installation of new spent fuel storage racks at Turkey Point, Unit Nos. 3 and 4, is acceptable based on the fact that previous conclusions relating to the radioactive waste treatment systems, as found in the Turkey Point Unit Nos. 3 and 4 Safety Evaluation, are unchanged by the installation of new spent fuel storage racks.

3.0 Significant Hazards Consideration Comments

The request for these amendments was individually noticed on June 7, 1984 (49 FR 23715) followed by a monthly notice on July 7, 1984 (49 FR 29925). Comments, request for a hearing and petition for leave to intervene were filed on July 9, 1984, by the Center for Nuclear Responsibility and Ms. Joette Lorion. We have addressed the relevant comments in the text of this Safety Evaluation. The petitioners contend:

"A.1 The Commission has traditionally held, in a series of case law that expansion of the spent fuel facility constitutes a significant safety hazards consideration."

Under the Commission's regulations in 10 CFR 50.92, an initial determination that the proposed amendments involve no significant hazards consideration was made based on a determination that on the operation of the facilities in accordance with the proposed amendments would not (1) involve a significant increase in the probability or consequences of an accident previously evaluated; or (2) create the possibility of a new or different kind of accident from any accident previously evaluated; or (3) involve a significant reduction in a margin of safety. Section 4.0 of this Safety Evaluation contains the Final No Significant Hazards Consideration Determination based on our evaluation and the fact that the reracking technology in this instance, has been well developed and utilized (over 100 similar applications have been approved) and the K_{eff} of the SFPs will be maintained less than or equal to 0.95.

"A.2 Acceptance criteria for criticality will not be met and thus, FPL will not be able to ensure that the fuel storage facility will always be subcritical by a safe margin in both normal operating and accident conditions."

This contention is addressed in Section 2.1 (Criticality Considerations) of this SE. The criterion for the neutron multiplication factor (K_{eff}) for storage of spent fuel is less than or equal to 0.95 including all uncertainties at the 95/95 probability confidence level. As noted in Section 2.1, this criterion is met for all normal and abnormal conditions for storage of the spent fuel in the proposed configuration at the Turkey Point facilities.

"A.3 The recitation and notice in 48 (sic) Federal Register Notice 23715, Vol. 49, No. 111, June 7, 1984, that the established acceptance criteria for criticality in the spent fuel pool shall be kept at or below K_{eff} 0.95 is untrue as evidence by 48 (sic) Federal Register Notice 25360, Volume 49, No. 120, June 20, 1984."

This contention is incorrect. As noted above in response to contention A.2, the K_{eff} for the SFPs is maintained equal to or less than 0.95 including all uncertainties at the 95/95 probability confidence level. The June 20, 1984 Federal Register Notice (49 FR 25360) was related to a separate action addressing the existing new fuel (unirradiated) storage racks which are not affected by these proposed amendments.

"A.4 In light of the fact that the utility, FPL, wants to operate the facility with a K_{eff} of 0.98 (FR 25360), as above referenced, places the proposed undertaking in the Significant Safety Hazards Category, and there can be no issuance of a license amendment to expand the spent fuel facility without a public hearing required by the Atomic Energy Act of 1954."

In support of contentions A.1 - A.4, the petitioners note the position taken by the Commission in Policy Issue SECY-83-337, STUDY ON SIGNIFICANT SAFETY HAZARDS, August 15, 1983:

"A K_{eff} of greater than 0.95 may be justifiable for a particular application but it would go beyond the present accepted staff criteria and would potentially be a significant hazards consideration." page 5-6.

This contention is factually incorrent. As indicated in responses to contentions A.1 through A.4, the SFPs for Turkey Pont Units 3 and 4 utilize current and accepted technology and the K_{eff} will be maintained less than or equal to 0.95.

4.0 Final No Significant Hazards Consideration

The standards used to arrive at a proposed determination that a request for amendments involves no significant hazards consideration are included in the Commission's regulations, 10 CFR 50.92, which state that the operation of the facilities in accordance with the proposed amendments would not (1) involve a significant increase in the probability or consequencs of an accident previously evaluated; or (2) create the possibility of a new or different kind of accident from any accident previously evaluated; or (3) involve a significant reduction in a margin of safety.

The proposed SFP expansion amendments are very similar to the initial SFP expansions, identified in Section 1 of this SE, in which many of the same issues were raised and resolved when the initial expansions were approved. Each specific aspect of this request was reviewed in detail and was very much a repeat of the initial expansion review. The knowledge and experience gained by the NRC staff in reviewing over 100 similar requests was also utilized. The current expansion request does not use any new or unproven technology in either the construction process or in the analytical techniques necessary to support the expansion request. The same postulated accidents were looked at again and the same precautions have been proposed by the licensee during the installations. In addition, the neutron multiplication factor (K_{eff}) of the pools will be maintained equal to or less than 0.95 including uncertainties.

Accordingly, the staff has determined that the request for amendments to expand (reracking to allow closer spacing) does not significantly increase the probability or consequences of accidents previously evaluated; does not create new accidents not previously evaluated; and does not result in any significant reduction in the margins of safety with respect to criticality, cooling or structural considerations.

The following evaluation in relation to the three standards demonstrates that the proposed amendments in support of the SFP expansions do not involve a significant hazards consideration.

First Standard - Involve a significant increase in the probability or consequences of an accident previously evaluated.

The following potential accident scenarios have been identified:

1. A spent fuel assembly drop in the spent fuel pool.

2. Loss of spent fuel pool cooling system flow.

3. A seismic event.

4. A spent fuel cask drop.

5. A construction accident.

The probability of any of the first four accidents is not affected by the racks themselves; thus reracking cannot increase the probability of these accidents. As for the construction accident, FPL does not intend to carry any rack directly over the stored spent fuel assemblies. All work in the spent fuel pool area will be controlled and performed in strict accordance with specific written procedures. Details on the precautions and requirements related to the installation and load handling during the SFP expansion activities and the licensees compliance to the requirements of NUREG-0612 "Control of Heavy Loads at Nuclear Power Plants" are provided in our SE dated August 29, 1984.

Accordingly, the proposed expansion does not significantly increase the probability of an accident previously evaluated.

The consequences of (1) a spent fuel assembly drop in the SFP and (4) a spent fuel cask drop and (5) a construction accident are discussed in detail in Sections 2.4 and 2.5 of this SE.

As noted in Section 2.4 of this SE, a load drop analysis was performed and indicates that the effects or consequences of a postulated load or temporary construction crane drop are bounded by the cask drop analysis. The consequences of the cask drop accident analysis results in a slight increase from the previous analysis for the existing racks in the estimated two-hour radiation doses at the EAB of 2 Rem to the thyroid with no change to the estimated doses to the whole body. The estimates resulting from our current analysis of 26 Rem to the thyroid and 1 Rem to the whole body are significantly less than the two-hour dose of 300 Rem to the thyroid and 25 Rem to the whole body at the EAB provided in 10 CFR 100 guidelines.

The postulated fuel handling accident is not directly related to SFP expansion request as stated in Section 2.5.2 of this SE. The results of our analysis assuming fuel exposure of 50,000 Mwd/t and steady-state power level of 2300 MW_{th} results in 30 Rem thyroid and 0.1 Rem whole body at the EAB, well within the 10 CFR Part 100 guidelines identified above. There will be no significant increase in the consequences in that the fuel handling accident is not directly related to the SFPs storage capacity but is dependent on the release of the equivalent gap activity of a single assembly recently removed from the reactor.

Section 2.3.4, and 2.3.5 and the Appended TER of this SE indicate that the postulated loads from a seismic event will not result in failures to the racks or pool structures, thus their integrity will be maintained. Neither the staff nor the license could identify any new means of losing cooling water. Therefore, since the integrity of the racks and SFP will be maintained there will be no significant change in the consequence of a

seismic event as the result of this amendment than previously evaluated seismic events.

As stated in Section 2.7 of this SE, the proposed rerack will result in no significant change in time to boiling under the presently authorized storage. The existing SFP cooling systems are not seismic Category 1, however, the licensee has committed to upgrade the systems to assure functional capability. Adequate time is available to provide the necessary makeup water from either on-site sources or fire engines from a nearby fire house. Thus, the time available and alternate means of providing makeup water to the SFP result in no significant increase in the consequences of loss of flow from that previously evaluated.

Therefore, based on the above, the probability or consequences of previously analyzed accidents will not be significantly increased as the result of the proposed SFP expansions.

Second Standard - Create the possibility of a new or different kind of accident from any accident previously evaluated.

The proposed SFP expansions have been evaluated in accordance with the guidance of the NRC position paper entitled, "OT Position for Review and Acceptance of Spent Fuel Storage and Handling Applications", appropriate NRC Regulatory Guides, appropriate NRC Standard Review Plans, and appropriate Industry Codes and Standards as identified in this SE. In addition, several previous NRC SEs for SFP expansions similar to this proposal have been reviewed. Neither the licensee nor the NRC staff could identify a credible mechanism for breaching the structural integrity of the SFPs which could result in loss of cooling water such that cooling flow could not be maintained or any other accidents not previously evaluated that might result from these amendments.

As a result of this SE and these reviews, the proposed SFP expansions do not, in any way, create the possibility of a new or different kind of accident from any accident previously evaluated for the Turkey Point SFPs.

Third Standard - Involve a significant reduction in a margin of safety.

The NRC staff safety evaluation review process has established that the issue of margin of safety, when applied to a SFP modification, will need to address the following areas:

1. Nuclear criticality considerations.

2. Thermal-Hydraulic considerations.

3. Material, Structural and Mechanical Considerations.

The established acceptance criteria used to assess the adequacy of SFP facilities assure maintenance of the necessary margins of safety. The staff's SE addresses the three areas identified above. The current request is very similar to the first request for expansion in that it raises the

same issues that were raised and resolved in the first request. Whereas each aspect of this request was of course reviewed in detail, the review process and scope was very much a repeat of the first expansion. In both reviews, the established criteria have been met. With the criteria met, the necessary and intended safety margins are maintained and there is no significant reduction in margin.

The criterion used in addressing nuclear criticality considerations for the storage of spent fuel is that the neutron multiplication factor (K_{eff}) is less than or equal to 0.95 including all uncertainties at the 95/95 probability confidence level .

As noted in Section 2.1 of this SE, the criterion is met for all normal and abnormal conditions for the storage of spent fuel in the proposed configuration. The proposed amendments, therefore, do not significantly reduce a margin of safety for criticality.

The criteria used in addressing thermal-hydraulic considerations for the storage of spent fuel are the methodologies and assumptions identified in Branch Technical Position ASB 9.2 and the SRP Section 9.1.3 to assure the temperatures for the SFP do not exceed 140°F under normal conditions during reloads and not exceed 212°F (boiling) during abnormal conditions following a full core discharge.

As noted 2.7 of this SE, the criteria are met for the normal third of a core reload and for the abnormal full core discharge conditions for bulk pool temperatures. The proposed amendments, therefore, do not significantly reduce the margin of safety for spent fuel cooling.

The criteria used in addressing material, structural and mechanical considerations are that the compatibility and chemical stability of the materials wetted by the SFP water be demonstrated and no significant corrosion occur. The structural and mechanical design of the SFP and storage racks maintain the fuel assemblies in a safe configuration through all environmental and abnormal loadings using the codes, standards and specifications identified in Section 2.3.2 of the SE.

As noted in Section 2.2 of this SE, the corrosion that will occur in the SFP environment will be of a little significance for the life of the plant and the environmental compatibility and stability of the materials used is adequate based on test data and actual service experience in operating reactors. As noted in Section 2.3 of this SE and the Appended TER, the structural and mechanical design of the SFPs and storage racks can withstand the environmental and abnormal loading and the SFP structure can sustain the higher density floor loadings with adequate margin. The proposed amendments, therefore, do not significantly reduce the margin of safety with regard to materials, structural, and mechanical integrity.

As the result of this SE and these reviews, the proposed SFP expansions do not result in a significant reduction in a margin of safety with respect to criticality, cooling or structural considerations.

Based on the foregoing, and the fact that the reracking technology in this instance has been well developed and demonstrated (100 similar applications have been approved), the Commission has concluded that the standards of 10 CFR 50.92 are satisfied. Therefore the Commission has made a final determination that the proposed amendment does not involve a significant hazards consideration.

5.0 Environmental Considerations

A separate Environmental Assessment has been prepared pursuant to 10 CFR Part 51. The Notice of Issuance of Environmental Assessment and Finding of No Significant Impact was published in the Federal Register on November 16, 1984. (49 FR 45514).

6.0 Conclusion

We have concluded based on the considerations discussed above, that: (1) these amendments will not (a) significantly increase the probability or consequences of accidents previously evaluated, (b) create the possibility of a new or different accident from any previously evaluated or (c) significantly reduce a margin of safety and, therefore, the amendments do not involve significant hazards considerations; (2) there is reasonable assurance that the health and safety of the public will not be endangered by operation in the proposed manner, and (2) such activities will be conducted in compliance with the Commission's regulations and the issuance of these amendments will not be inimical to the common defense and security or to the health and safety of the public.

Dated: November 21, 1984

Principal Contributors:

D. McDonald, Project Manager
M. Wohl, Accident Evaluation Branch
J. Lee, Meteorology and Effluent Treatment Branch
J. Mins, Radiological Assessment Branch
E. Branagan, Radiological Assessment Branch
S. Kim, Structural and Geotechnical Engineering Branch
B. Turovlin, Chemical Engineering Branch
J. Ridgley, Auxiliary System Branch
L. Kopp, Core Performance Branch
R. Samworth, Environmental and Hydrologic Engineering Branch

ATTACHMENT 1

TECHNICAL EVALUATION REPORT

EVALUATION OF SPENT FUEL RACKS STRUCTURAL ANALYSIS

FLORIDA POWER AND LIGHT COMPANY

TURKEY POINT UNITS 3 AND 4

NRC DOCKET NO. 50-250, 50-251

NRC TAC NO. 54480, 54481

NRC CONTRACT NO. NRC-03-81-130

FRC PROJECT C5506

FRC ASSIGNMENT 26

FRC TASK 529

Prepared by

Franklin Research Center
20th and Race Streets
Philadelphia, PA 19103

FRC Group Leader: R. C. Herrick

Prepared for

Nuclear Regulatory Commission
Washington, D.C. 20555

Lead NRC Engineer: S. B. Kim

October 25, 1984

This report was prepared as an account of work sponsored by an agency of the United States Government. Neither the United States Government nor any agency thereof, or any of their employees, makes any warranty, expressed or implied, or assumes any legal liability or responsibility for any third party's use, or the results of such use, of any information, apparatus, product or process disclosed in this report, or represents that its use by such third party would not infringe privately owned rights.

Prepared by:	Reviewed by:	Approved by:
R C Herrick	S. Pandey	S. Pandey
Principal Author	Project Manager	Department Director (Acting)
Date: 10-25-84	Date: 10/25/84	Date: 10/25/84

FRANKLIN RESEARCH CENTER
DIVISION OF ARVIN/CALSPAN

20th and Race Streets, Phila., Pa. 19103 (215) 448-1000

8410260111 XA

CONTENTS

SSection	Title	Page
1	INTRODUCTION	1
	1.1 Purpose of the Review	1
	1.2 Generic Background.	1
2	ACCEPTANCE CRITERIA.	3
	2.1 Applicable Criteria	3
	2.2 Principal Acceptance Criteria	4
3	TECHNICAL REVIEW	6
	3.1 Mathematical Modeling and Seismic Analysis of Spent Fuel Rack Modules	6
	3.2 Evaluation of the Simplified Two-Dimensional Nonlinear Model	10
	3.2.1 Description of the Model	10
	3.2.2 Assumptions Used in the Analysis	12
	3.2.3 Hydrodynamic Coupling Between Fluid and Rack Structure	12
	3.2.4 Seismic Loading	13
	3.2.5 Integration Time Step	14
	3.2.6 Rack Displacements	14
	3.3 Evaluation of the Detailed Three-Dimensional Linear Model	16
	3.3.1 Description of the Model	16
	3.3.2 Assumptions Used in the Analysis	16
	3.3.3 Load Correction Factor	18

8

CONTENTS (Cont.)

Section	Title	Page
	3.3.4 Module Assembly Lift-Off Analysis	18
	3.3.5 Stress Results	18
	3.4 Review of Spent Fuel Pool Structural Analysis	19
	3.4.1 Spent Fuel Pool Structural Analysis	19
	3.4.2 Analysis Procedure	19
	3.4.3 Summary of Results	25
	3.5 Fuel Assembly Drop Accident Analysis	26
4	CONCLUSIONS	27
5	REFERENCES	28

FOREWORD

This Technical Evaluation Report was prepared by Franklin Research Center under a contract with the U.S. Nuclear Regulatory Commission (Office of Nuclear Reactor Regulation, Division of Operating Reactors) for technical assistance in support of NRC operating reactor licensing actions. The technical evaluation was conducted in accordance with criteria established by the NRC.

The following staff of the Franklin Research Center contributed to the technical preparation of this report: R. Clyde Herrick, Vincent K. Luk, and Balar S. Dhillon (consultant).

1. INTRODUCTION

1.1 PURPOSE OF THE REVIEW

This technical evaluation report (TER) covers an independent review of the Florida Power & Light Company's licensing report [1] on high-density spent fuel racks for Turkey Point Units 3 and 4 with respect to the evaluation of the spent fuel racks' structural analyses, the fuel racks' design, and the pool's structural analysis. The objective of this review was to determine the structural adequacy of the Licensee's high-density spent fuel racks and spent fuel pool.

1.2 GENERIC BACKGROUND

Many licensees have entered into a program of introducing modified fuel racks to their spent fuel pools that will accept higher density loadings of spent fuel in order to provide additional storage capacity. However, before the higher density racks may be used, the licensees are required to submit rigorous analysis or experimental data verifying that the structural design of the fuel rack is adequate and that the spent fuel pool structure can accommodate the increased loads.

The analysis is complicated by the fact that the fuel racks are fully immersed in the spent fuel pool. During a seismic event, the water in the pool, as well as the rack structure, will be set in motion resulting in fluid-structure interaction. The hydrodynamic coupling between the fuel assemblies and the rack cells, as well as between adjacent racks, plays a significant role in affecting the dynamic behavior of the racks. In addition, the racks are free-standing. Since the racks are not anchored to the pool floor or the pool walls, the motion of the racks during a seismic event is governed by the static/dynamic friction between the rack's mounting feet and the pool floor, and by the hydrodynamic coupling to adjacent racks and the pool walls.

Accordingly, this report covers the review and evaluation of analyses submitted for Turkey Point Units 3 and 4 by the Licensee, wherein the structural analysis of the spent fuel racks under seismic loadings is of primary concern due to the nonlinearity of gap elements and static/dynamic

friction, as well as fluid-structure interaction. In addition to the evaluation of the dynamic structural analysis for seismic loadings, the design of the spent fuel racks and the analysis of the spent fuel pool structure under the increased fuel load are reviewed.

2. ACCEPTANCE CRITERIA

2.1 APPLICABLE CRITERIA

The criteria and guidelines used to determine the adequacy of the high-density spent fuel racks and pool structures are provided in the following documents:

- OT Position for Review and Acceptance of Spent Fuel Storage and Handling Applications, U.S. Nuclear Regulatory Commission, January 18, 1979 [2]

- Standard Review Plan, NUREG-0800, U.S. Nuclear Regulatory Commission

  Section 3.7, Seismic Design
  Section 3.8.4, Other Category I Structures
  Appendix D to Section 3.8.4, Technical Position on Spent Fuel Pool Racks
  Section 9.1, Fuel Storage and Handling

- ASME Boiler and Pressure Vessel Code, American Society of Mechanical Engineers

  Section III, Subsection NF, Component Supports
  Subsection NB, Typical Design Rules

- Regulatory Guides, U.S. Nuclear Regulatory Commission

  1.29 - Seismic Design Classification

  1.60 - Design Response Spectra for Seismic Design of Nuclear Power Plants

  1.61 - Damping Values for Seismic Design of Nuclear Power Plants

  1.92 - Combining Modal Responses and Spatial Components in Seismic Response Analysis

  1.124 - Design Limits and Loading Combinations for Class 1 Linear-Type Component Types

- Other Industry Codes and Standards

  American National Standards Institute, N210-76

  American Society of Civil Engineers, Suggested Specification for Structures of Aluminum Alloys 6061-T6 and 6067-T6.

2.2 PRINCIPAL ACCEPTANCE CRITERIA

The principal acceptance criteria for the evaluation of the spent fuel racks' structural analysis for Turkey Point Units 3 and 4 are set forth by the NRC's OT Position for Review and Acceptance of Spent Fuel Storage and Handling Applications (OT Position Paper) [2]. Section IV of the document describes the mechanical, material, and structural considerations for the fuel racks and their analysis.

The main safety function of the spent fuel pool and the fuel racks, as stated in that document, is "to maintain the spent fuel assemblies in a safe configuration through all environmental and abnormal loadings, such as earthquake, and impact due to spent fuel cask drop, drop of a spent fuel assembly, or drop of any other heavy object during routine spent fuel handling."

Specific applicable codes and standards are defined as follows:

> "Construction materials should conform to Section III, Subsection NF of the ASME* Code. All materials should be selected to be compatible with the fuel pool environment to minimize corrosion and galvanic effects.
>
> Design, fabrication, and installation of spent fuel racks of stainless steel materials may be performed based upon the AISC** specification or Subsection NF requirements of Section III of the ASME B&PV Code for Class 3 component supports. Once a code is chosen its provisions must be followed in entirety. When the AISC specification procedures are adopted, the yield stress values for stainless steel base metal may be obtained from the Section III of the ASME B&PV Code, and the design stresses defined in the AISC specifications as percentages of the yield stress may be used. Permissible stresses for stainless steel welds used in accordance with the AISC Code may be obtained from Table NF-3292.1-1 of ASME Section III Code."

Criteria for seismic and impact loads are provided by Section IV-3 of the OT Position Paper, which requires the following:

- Seismic excitation along three orthogonal directions should be imposed simultaneously.

---

* American Society of Mechanical Engineers Boiler and Pressure Vessel Codes, Latest Edition.

** American Institute of Steel Construction, Latest Edition.

- The peak response from each direction should be combined by the square root of the sum of the squares. If response spectra are available for vertical and horizontal directions only, the same horizontal response spectra may be applied along the other horizontal direction.

- Increased damping of fuel racks due to submergence in the spent fuel pool is not acceptable without applicable test data and/or detailed analytical results.

- Local impact of a fuel assembly within a spent fuel rack cell should be considered.

Temperature gradients and mechanical load combinations are to be considered in accordance with Section IV-4 of the OT Position Paper.

The structural acceptance criteria are provided by Section IV-6 of the OT Position Paper. For sliding, tilting, and rack impact during seismic events, Section IV-6 of the OT Position Paper provides the following:

> "For impact loading the ductility ratios utilized to absorb kinetic energy in the tensile, flexural, compressive, and shearing modes should be quantified. When considering the effects of seismic loads, factors of safety against gross sliding and overturning of racks and rack modules under all probable service conditions shall be in accordance with the Section 3.8.5.II-5 of the Standard Review Plan. This position on factors of safety against sliding and tilting need not be met provided any one of the following conditions is met:
>
> (a) it can be shown by detailed nonlinear dynamic analyses that the amplitudes of sliding motion are minimal, and impact between adjacent rack modules or between a rack module and the pool walls is prevented provided that the factors of safety against tilting are within the values permitted by Section 3.8.5.II.5 of the Standard Review Plan
>
> (b) it can be shown that any sliding and tilting motion will be contained within suitable geometric constraints such as thermal clearances, and that any impact due to the clearances is incorporated."

3. TECHNICAL REVIEW

3.1 MATHEMATICAL MODELING AND SEISMIC ANALYSIS OF SPENT FUEL RACK MODULES

The submerged spent fuel rack modules exhibit highly nonlinear structural behavior under seismic excitation. The sources of nonlinearity can generally be categorized by the following:

a. The impact between fuel cell and fuel assembly: The fuel assembly standing inside a fuel cell will impact its four inside walls repeatedly under earthquake loadings. These impacts are nonlinear in nature and when compounded with the hydrodynamic coupling effect will significantly affect the dynamic responses of the modules in seismic events.

b. Friction between module base and pool liner: The modules are free-standing on the pool liner, i.e., they are neither anchored to the pool liner nor attached to the pool wall. Consequently, the modules are held in place by virtue of the frictional forces between the module base and pool liner. These frictional forces act together with the hydrodynamic coupling forces to both excite and restrain the module during seismic events.

All modules at Turkey Point Units 3 and 4 have nearly square cross sections across the axes of fuel cells [1]. Modules of this design geometry generally behave in three-dimensional fashion under earthquake loadings. Hence, the modules will exhibit three-dimensional nonlinear structural behavior in seismic events, and all seismic analyses of modules should therefore focus on characterizing this behavior.

There are two types of modules at Turkey Point Units 3 and 4 [1]. The modules in Region I have a center-to-center storage cell spacing of 10.6 in. They are reserved for temporary core off-loading, temporary storage of new fuel, and storage of spent fuel above specified levels of reactivity. The modules in Region II, with 9.0-in center-to-center spacing, are used to store irradiated fuel below specific reactivity levels. The designs of modules in Regions I and II are shown in Figures 1 and 2, respectively.

The Licensee conducted the seismic analysis of modules in two parts. The first part was a time history analysis of a simplified two-dimensional nonlinear finite element model of an individual fuel cell shown in Figure 3.

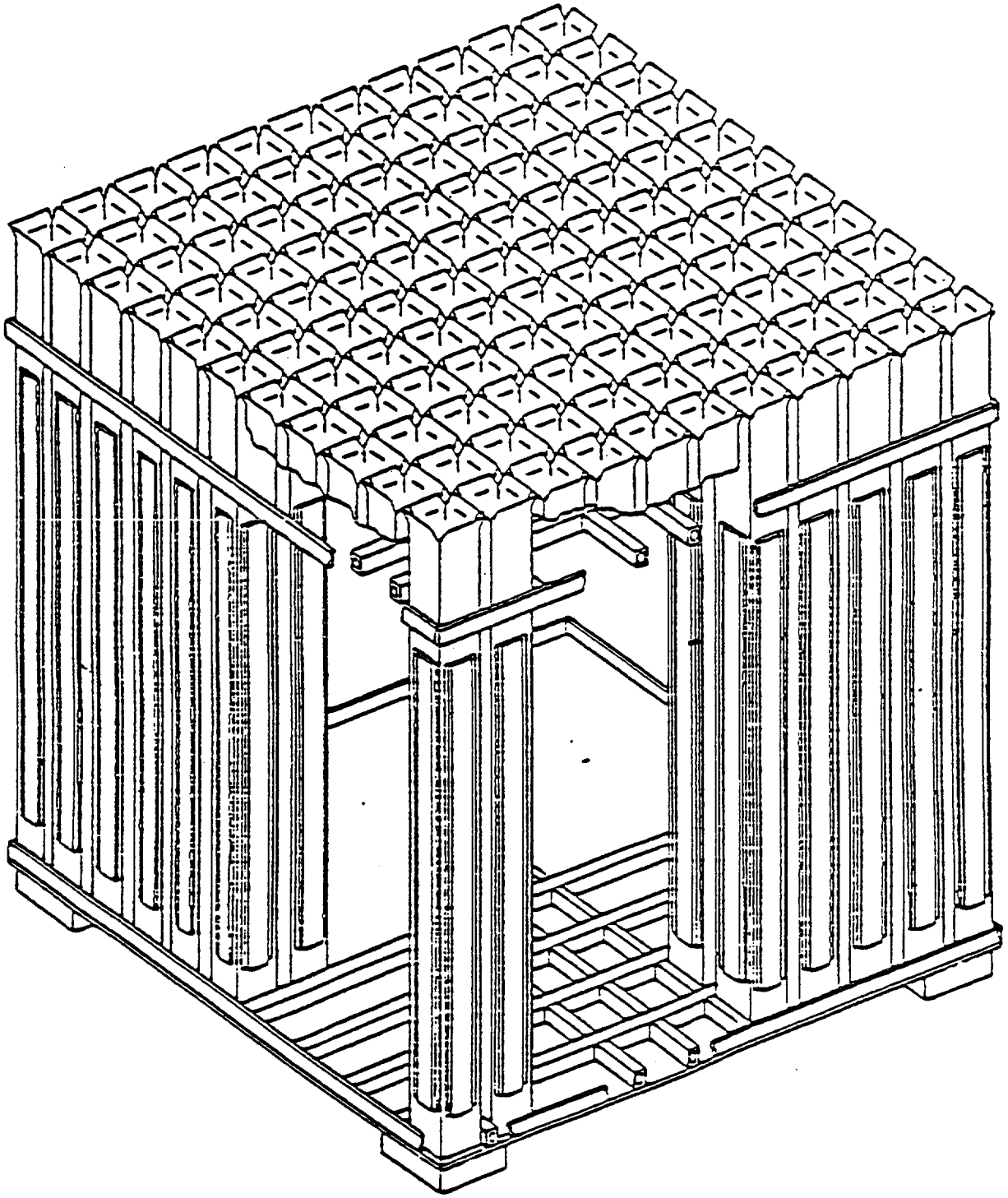

Figure 1. Fuel Storage Rack Assembly in Region I

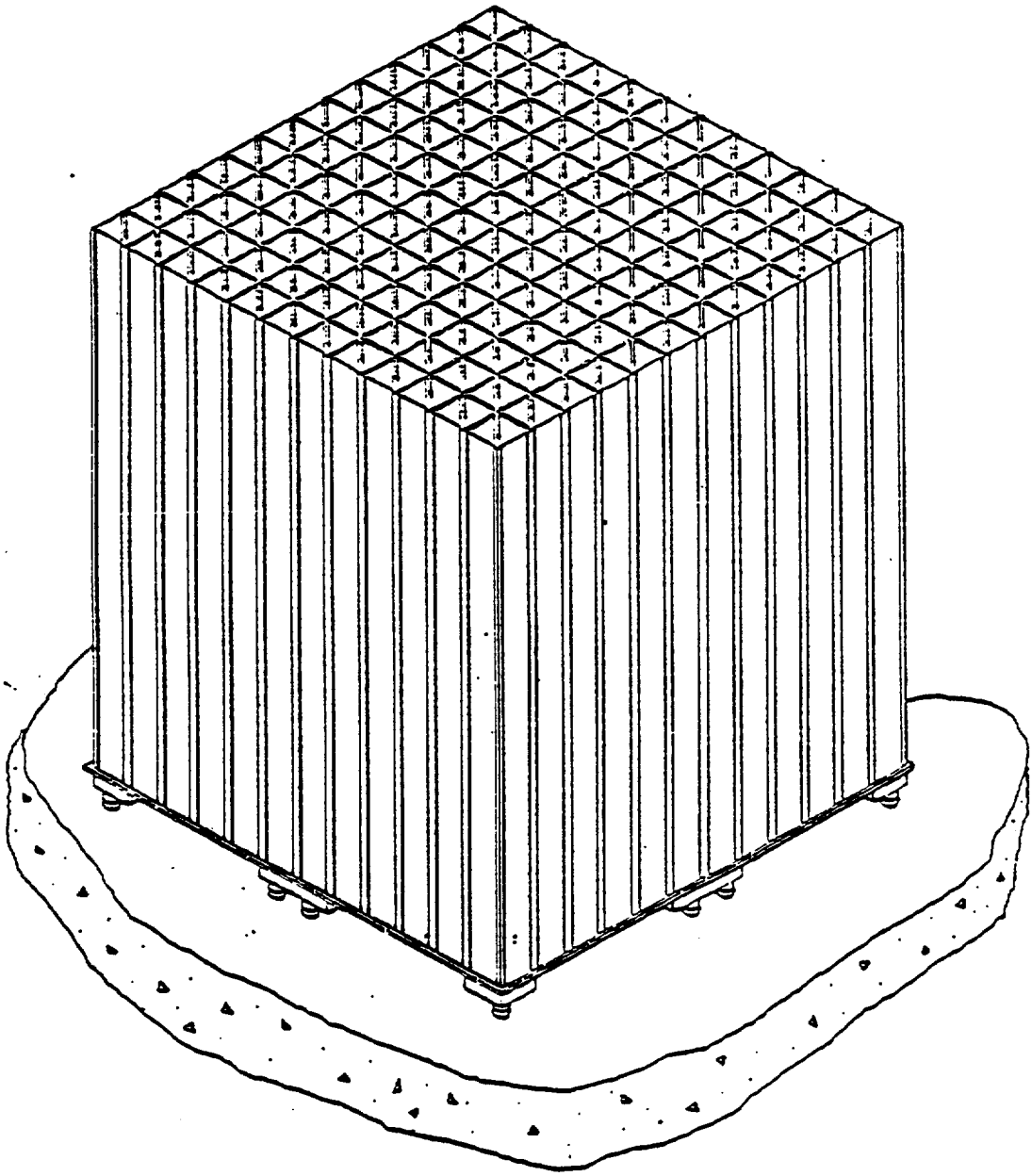

Figure 2. Fuel Storage Rack Assembly in Region II

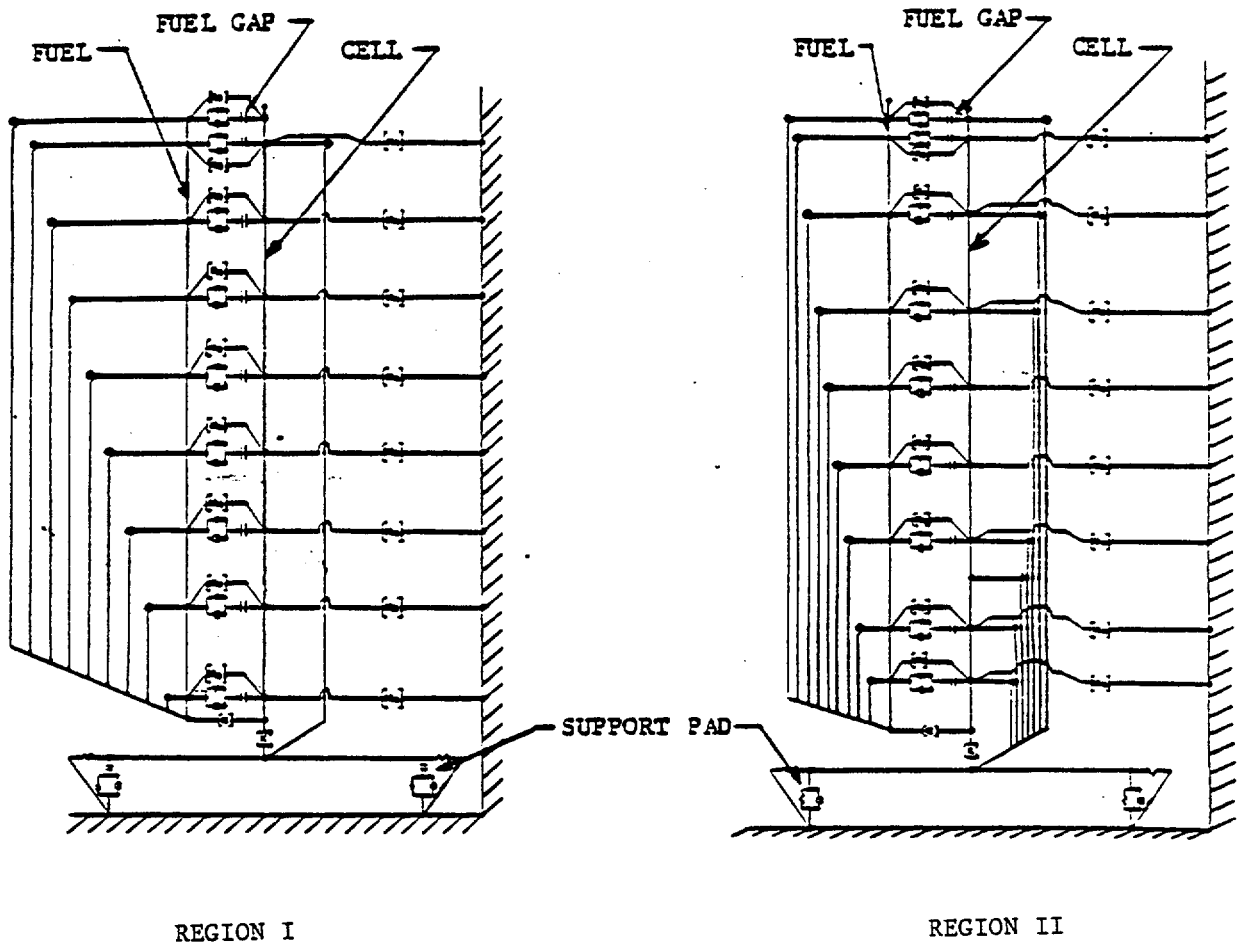

Figure 3. Two-Dimensional Nonlinear Model

The second part was a response spectrum analysis of a detailed three-dimensional linear finite element model of a rack assembly shown in Figure 4. Both modules consisted of two models to reflect the two different designs of modules in Regions I and II. Structural damping of 2% was used in the seismic analysis for both the operating basis earthquake (OBE) and the safe shutdown earthquake (SSE).

In a previous review of similar spent fuel racks, the following issue concerning the modeling technique used in the analysis was discussed [3]:

> The simplified two-dimensional model does not fully simulate the more complicated three-dimensional structure behavior exhibited by the modules. The two-dimensional model essentially uncouples the two mutually perpendicular horizontal motions which are nonlinearly interrelated under seismic loadings. Thus, an approach using two models (nonlinear, two-dimensional and linear, three-dimensional model) may have difficulty in resolving peak stresses.

The description and evaluation of the two models are addressed in detail in Sections 3.2 and 3.3. The displacement and stress results are discussed in appropriate subsections.

3.2 EVALUATION OF THE SIMPLIFIED TWO-DIMENSIONAL NONLINEAR MODEL

3.2.1 Description of the Model

The simplified two-dimensional model was developed to simulate the major structural characteristics of an individual fuel cell within a submerged rack assembly. Two versions of this model are shown in Figure 3 to reflect two different module designs in Regions I and II. The model was developed in accordance with the WECAN (Westinghouse Electric Computer Analysis) code.

A time history analysis of the model was performed by the Licensee with the simultaneous application of a vertical and a horizontal component of seismic loads. Nonlinear gap elements were used in the model to represent the possible impact between the fuel cell and the fuel assembly, as well as the friction between the module base and the pool liner. The hydrodynamic coupling effect between fuel cell and fuel assembly, as well as between fuel cell and rigid wall, is simulated by appropriate coupling springs. A damping

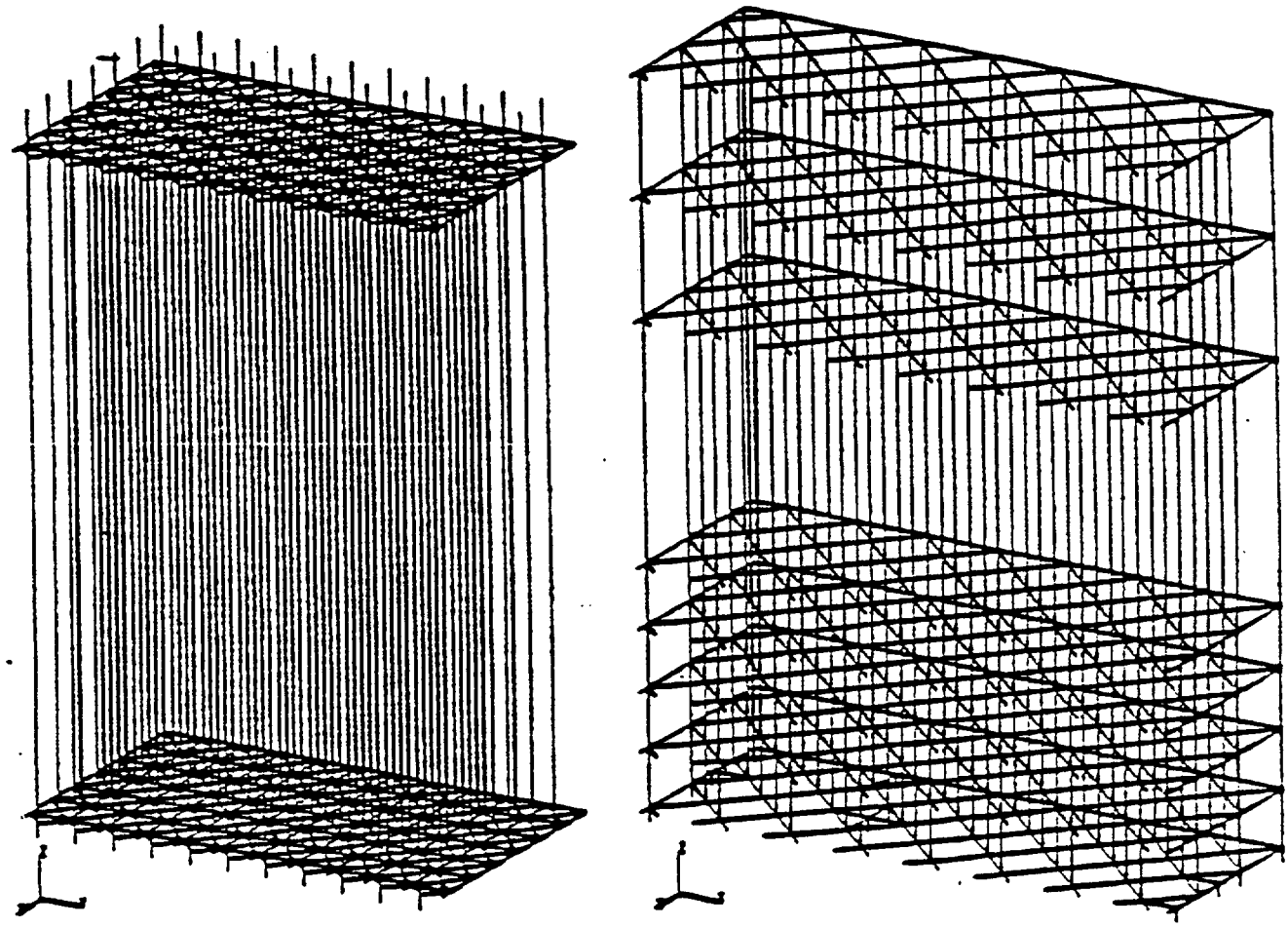

REGION I

REGION II

Figure 4. Three-Dimensional Linear Model

value of 25% was used to represent the impact damping of the fuel assembly [4]. This impact damping value was determined from a test consisting of the fuel assembly in air impacting on a grid surface [5].

3.2.2 Assumptions Used in the Analysis

The following assumptions were used in the seismic analysis of the model:

a. A structural damping value of 2% was used for both OBE and SSE events.

b. The fluid damping was conservatively neglected.

c. Only a constant value of friction coefficient was considered in each seismic analysis. The coefficient of friction remained unchanged whether the module was stationary or in motion. Analysis was performed for static friction coefficients of u = 0.2 and 0.8. These two cases would envelop the values of intermediate friction coefficients.

d. The initial status of the gap between fuel cells and fuel assembly is immaterial because all fuel cells would move in phase soon after an earthquake occurred. Adjacent modules would also move in phase in seismic events.

e. The sloshing movement of the water is in the upper elevations of the spent fuel pool above the top of the modules. Therefore, no sloshing loads are imposed on the module structure.

The assumption in Item d may be valid when adjacent modules are fully loaded, but the out-of-phase response will most likely occur when some modules are either partially loaded or empty.

3.2.3 Hydrodynamic Coupling Between Fluid and Cell Structure

The hydrodynamic coupling effect between adjacent modules and between the fuel cell and fuel assembly plays a significant role in affecting the dynamic responses of the module in seismic events. As stated in Section 3.2.2, the modules were assumed to move in phase. This assumption led to consideration of the motion of an individual cell surrounded on all four sides by rigid boundaries which are separated from the cell by equivalent gaps as an equivalent representation of the entire rack assembly. The hydrodynamic coupling

mass between the rack module and the pool wall, as shown in Figure 3, was calculated by evaluating the effects of the gap between the modules and the pool wall using the method outlined in the paper by Fritz [6].

The technique of potential flow and kinetic energy was used in assessing the hydrodynamic coupling mass between the fuel cell and the fuel assembly. This mass, which depends on the size of fuel assembly and the inside dimensions of the fuel cell, was calculated by equating the kinetic energy of the hydrodynamic coupling mass to that of the fluid flowing around the fuel assembly within the fuel cell. The concept of this method was discussed in a paper by De Santo [7].

Fritz's [6] method for hydrodynamic coupling is widely used and provides an estimate of the mass of fluid participating in the vibration of immersed mass-elastic systems. Fritz's method has been validated by excellent agreement with experimental results [6] when employed within the conditions upon which it was based, that of vibratory displacements which are very small compared to the dimensions of the fluid cavity. Application of Fritz's method for the evaluation of hydrodynamic coupling effects between rack modules and a pool wall has been considered by this review to serve only as an approximation of the actual hydrodynamic coupling forces. This is because the geometry of a fuel rack module in its clearance space, is considerably different than that upon which Fritz's method was developed and experimentally verified.

Thus, the limitations of Fritz's [6] modeling technique for hydrodynamic coupling of rack modules adjacent to other rack modules or a pool wall reinforce the position of this review that the Licensee's fuel rack dynamic model be considered conservative only for dynamic displacements that are small relative to the available displacement clearance.

3.2.4 Seismic Loading

The model was subject to a simultaneous application of a vertical and a horizontal component of seismic loads. The horizontal seismic loads are identical in the north-south and the east-west directions, but there are two different sets of hydrodynamic coupling masses in these two horizontal

directions. Conservative results were obtained by the Licensee by conducting one time history analysis in the horizontal direction having the more severe hydrodynamic coupling mass.

3.2.5 Integration Time Step

The Licensee performed a time step study in an effort to find the correct integration time step to yield a converged solution [5]. It was found that the convergence of solution occurred at a time step of 0.001 sec for modules in Region I and 0.005 sec for modules in Region II [4]. These time steps are much greater than the 2.0×10^{-4} sec reported by Gilmore of Westinghouse in a similar analysis [8]. The Licensee explained that the wide range of time steps that yield convergence may be responsible for these differing values.

3.2.6 Rack Displacements

The Licensee claimed that the displacement of the module would be the same as that of the individual cell found in this model because of the in-phase motion assumption used in this analysis. The Licensee found that the maximum combined seismic and thermal module displacements are 0.256 inch in Region I and 0.214 inch in Region II [5]. Both results are smaller than the nominal spacing of 1.11 inch between adjacent modules, and consequently, no collision will occur between adjacent modules. While this result may not be conservative because the two-dimensional model used in this analysis uncouples the two horizontal responses under seismic loadings, it does indicate that the displacements are relatively small.

The detailed rack displacements are tabulated in Table 1 which is taken from the Licensee's response [5] to questions during the review. The moments and shear forces generated from this model were used to calculate the load correction factors. The load results from the detailed model were then multiplied by these factors to yield the stress results in the structural analysis of the module, as discussed in Section 3.3 of this report. A detailed review of this method was given in Reference 3.

Table 1. Computed Rack Displacements

SSE Seismic + Maximum Normal Thermal			REGION I	REGION II
			SSE Seismic + Normal Thermal	
Max. Sliding Distance, μ = .2 (N-Linear Results)	Δs	in	.0001	0.007
Max. Structural Defl., μ = .8 (N-Linear Results)	δ	in	.124	0.086
Total Displacement One Rack $\Delta = \Delta s + \delta$	Δ	in	.1241	0.093
SSRS Combined Displacement 2 Racks with only 1 sliding $\Delta max = \sqrt{\Delta^2 + \delta^2}$	Δmax	in	.175	0.127
Max. Normal Thermal Displacement	δ_T	in	.088	0.087
Max. Combined Thermal & Seismic Displacements $\bar{\Delta} = \delta_T + \Delta max$	$\bar{\Delta}$	in	.256	0.214
Rack to Rack Gap	GAP	in	1.11	1.11

SSE Seismic Sliding + Max Accident Thermal			REGION I	REGION II
			SSE Seismic Sliding + Thermal Accident	
Max. Sliding Distance, μ = .2	Δs	in	.0001	0.007
Max. Accident Thermal Displacement	δ_T	in	.175	0.190
Combined Thermal & Seismic Sliding $\bar{\Delta} = \Delta_s + \delta_T$	$\bar{\Delta}$	in	.1751	0.197
Rack to Rack Gap	GAP	in	1.11	1.11

NOTE: THE RACK TO WALL GAPS ARE LARGER THAN THE RACK TO RACK GAPS.

Because load correction factors based on base moment and base shear force were employed by the Licensee to introduce the dynamic response from the nonlinear two-dimensional dynamic displacement analysis model to the linear three-dimensional stress analysis, the Licensee provided a comparison of the vertical mounting pad forces in the linear and nonlinear models. Figure 5, which is taken from the Licensee response [5], shows that the summation of vertical forces in the two analysis models is reasonably close and is considered to be satisfactory.

3.3 EVALUATION OF THE DETAILED THREE-DIMENSIONAL LINEAR MODEL

3.3.1 Description of the Model

A model was developed to simulate the major structural characteristics of the entire module submerged in the fuel pool. Two versions of the model are shown in Figure 4 to represent two different module designs in Regions I and II. The WECAN code was used to develop these two models. Three-dimensional beam elements were used to construct the models.

According to Reference 5, the seismic analysis was done on the 10x11 module in Region I and the 10x14 module in Region II. The model of the module in Region I has two fine meshes of elements, one on the top and the other on the bottom of the model to represent the top and the bottom grip assembly of the module, respectively. There are eight horizontal meshes of elements in the model of the module in Region II to simulate the eight skip weld locations along the length of cells.

A response spectrum analysis of the three-dimensional models was performed. The three components of the seismic loads were applied to the models, one component at a time.

3.3.2 Assumptions Used in the Analysis

All the assumptions except the initial status of the gap between fuel cell and fuel assembly used in the analysis of the two-dimensional model are applicable here. A few additional assumptions used in this analysis are described below:

NON LINEAR MODEL PAD LOADS

REGION I 10x11

NS + DW

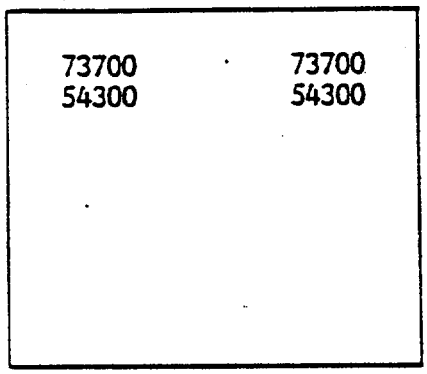

	Linear	Non Linear
Total NS + DW	147400	149600
Total DW	108600	112800
Ratio (NS+DW)/ DW	1.36	1.33

EW + DW

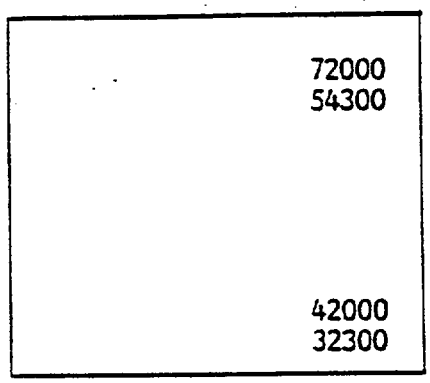

	Linear	Non Linear
Total EW + DW	114000	117000
Total DW	86600	88000
Ratio (EW+DW)/ DW	1.32	1.33

REGION II 10x14

NS + DW

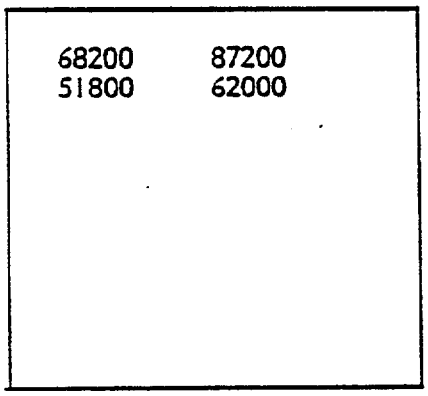

	Linear	Non Linear
Total NS + DW	155400	145300
Total DW	113800	101900
Ratio (NS+DW)/DW	1.37	1.43

EW + DW

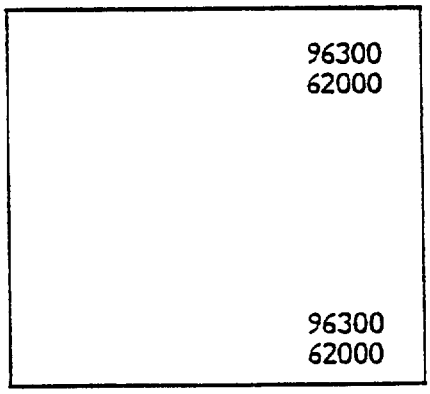

	Linear	Non Linear
Total ED + DW	192600	181600
Total DW	124000	114500
Ratio (EW+DW)/DW	1.55	1.59

Figure 5. Comparison of Mounting Pad Loads for the Nonlinear and Linear Rack Analysis Modules

a. A composite distributive mass density was used in the analysis to embody the masses of the fuel cell, the fuel assembly, the poison material, and the hydrodynamic coupling mass.

b. No impact between the fuel cell and the fuel assembly was considered.

c. The module base was stationary with respect to the pool liner at all times.

3.3.3 Load Correction Factor

Since the detailed model did not account for the nonlinear effect of a fuel assembly impacting a fuel cell and the support pad movements, the internal loads and stresses for the module assembly obtained from this model were modified by load correction factors. The calculation was focused on the bending moments and shear forces obtained at the base plate of this detailed model. The bending moment load correction factor was defined as the ratio of the bending moment obtained at the base of the simplified model to the average bending moment derived at the base of the detailed model. Similar definition was used for the shear force load correction factor. The maximum loads from this detailed model were multiplied by these load correction factors and were used in the structural analysis to obtain the streses within the module assembly. Further discussion is provided in Section 3.4.

3.3.4 Module Assembly Lift-Off Analysis

The modules having the largest difference between the two horizontal dimensions were chosen to study the possibility of lift-off. The 8x11 module in Region I and the 9x13 module in Region II were subject to investigation for this purpose. Both modules were found not to lift off the pool liner in seismic events [5].

3.3.5 Stress Results

The maximum responses of the detailed model from the seismic components in three directions were combined by the SRSS model in the structural analysis. Stresses from these responses and from dead weight are shown in Tables 2 and 3 for Region I racks and Region II racks, respectively. Tables

Table 2. Stresses, Region I Racks

REGION I RACKS

SUMMARY OF DESIGN STRESSES AND MINIMUM MARGINS OF SAFETY

Normal & Upset Conditions

			Design Stress (psi)	Allowable Stress (psi)	Margin of Safety
1.0	Support Pad Assembly				
	1.1	Support Pad			
		Shear	2009	23150*	10.52
		Axial and Bending	5701	23150*	3.06
		Bearing	4230	23150*	4.47
	1.2	Support Pad Screw			
		Shear	3675	9260	1.52
	1.3	Support Plate			
		Shear	2152	9260	3.30
		Weld Shear	15672	21000*	.48
2.0	Cell Assembly				
	2.1	Cell to Bottom Grid Weld			
		Weld Shear	15840	23150*	.46
	2.2	Cell to Top Grid Weld			
		Weld Shear	15840	23150*	.46
	2.3	Cell			
		Axial and Bending	.514	1.0**	.94
	2.4	Cell to Wrapper Weld			
		Weld Shear	4517	9260	1.05
3.0	Grid Assembly				
	3.1	Top Grid Box Member			
		Shear	2055	9260	3.51
		Axial and Bending	1659	13890	7.37
	3.2	Top Grid Members			
		Weld Shear	13544	21000	.55
	3.3	Top Grid Outer Member			
		Axial and Bending	1707	13890	7.14
		Shear	146	9260	62.51
	3.4	Bottom Grid Structure			
		Shear	3349	9260	1.77
		Axial and Bending	12057	13890	.15
	3.5	Bottom Grid Members Welds			
		Weld Shear	15702	21000	.34
	3.6	Bottom Grid Base Plate Weld			
		Weld Shear	15941	21000	.32
1.0	Grid Assembly - Cont'd				
	3.7	Bottom Grid Outer Member			
		Axial and Bending	12050	13890	.15
		Shear	768	9260	11.06
	3.8	Base Plate Stiffener to Base Plate Weld			
		Weld Shear	13500	21000	.56

* Thermal Plus OBE Stress is Limiting

** Allowable Per Appendix XVII - 2215 Eq. (24)

Table 3. Stresses, Region II Racks

REGION 2 RACKS

SUMMARY OF DESIGN STRESSES AND MINIMUM MARGINS OF SAFETY

Normal & Upset Conditions

		Design Stress (psi)	Allowable Stress (psi)	Margin of Safety
1.0	Support Pad Assembly			
1.1	Support Pad			
	Shear	3504	23150*	5.61
	Axial and Bending	10288	23150*	1.25
	Bearing	7631	23150*	2.03
1.2	Support Pad Screw			
	Shear	6974	9260	.33
1.3	Support Plate			
	Shear	4403	9260	1.10
	Weld Shear	16556	21000*	.34
2.0	Cell Assembly			
2.1	Cell			
	Axial and Bending	.899	1.0†	.11
2.2	Cell to Base Plate Weld			
	Weld Shear	15482	21000	.36
2.3	Cell to Cell Weld			
	Weld Shear	18389	23150*	.26
2.4	Cell Seam Weld			
	Weld Shear	1751†	2194††	.25
2.5	Cell to Wrapper Weld			
	Weld Shear	10299	18520**	.80

* Thermal Plus OBE Stress is Limiting
** SSE Stress is Limiting
† Allowable per Appendix XVII-2215 Eq (24)
†† Design Load and Allowable Load in Lbs is Shown

2 and 3 were provided by the Licensee [5] and the support plate weld shear stress and allowable stresses were subsequently changed as discussed below. Tables 2 and 3 provide the final data which were found to be acceptable during the review.

For Tables 2 and 3, the allowable shear stress in the weld of Item 1.3, Support Plate, was changed to 21,000 psi to be in accordance with the allowable weld stress of Table NF-3292.1-1 of the ASME Code.* For Table 3, the weld shear stress for Item 1.3 was changed to 16,556 psi, recognizing that the support plate compressive load is carried in metal-to-metal contact and is not dependent upon the weld.

3.4 REVIEW OF SPENT FUEL POOL STRUCTURAL ANALYSIS

3.4.1 Spent Fuel Pool Structural Analysis

The spent fuel pool is a reinforced concrete plate structure supported on compacted limerock fill. The spent fuel pool walls are lined with 1/4-in stainless steel liner. The Licensee presented an analysis to demonstrate the structural integrity of the spent fuel pool for the postulated loading conditions for the new high density racks.

3.4.2 Analysis Procedure

The Licensee used the finite element method for the analysis of the spent fuel pool. The structure was modeled with three-dimensional solid elements and the ANSYS computer code. By approximating symmetry along the long (north-south) diretion of the pool, only half of the pool was modeled. The boundary conditions on the plan of symmetry were adjusted to represent symmetric and non-symmetric loading conditions. The liner plate was not considered to provide structural resistance in the pool analysis. The soil medium was represented by vertical compression spring elements. The thermal effects were obtained by imposing a uniform thermal gradient across solid elements.

* American Society of Mechanical Engineers, Boiler and Pressure Vessel Code, Section III, Division 1, Subsection NF, 1980 Edition.

The following critical loading combinations were considered.

1. Y = 1.25 (D+P+L) with and without T
2. Y = 1.25 (D+P+L) with and without W
3. Y = 1.25 (D+P+L+E) with and without T
4. Y = 1.0 (D+P+L+E') with and without T

where Y = required yield strength of the structure
D = weight of the structure plus permanent loads
P = hydrostatic pressure of pool water
L = weight of loaded fuel racks in pool
E = design earthquake load, 0.05g horizontally, 2/3 (0.05g) vertically
E'= maximum earthquake load, 0.15g horizontally, 2/3 (0.15g) vertically
T = thermal load (inside face of walls 180°F, exposed face 30°F, and bottom face of slab 50°F)
W = wind load.

As a result of this analysis, the Licensee stated the following:

1. Seismic analysis for the new racks showed that these racks do not uplift during the seismic event and, therefore, no additional amplification factors for impact were considered.

2. The analysis showed that the seismic loading created a more severe effect than the combined effect of tornado, wind, and depressurization.

3. The resulting stresses in the elements caused by mechanical loads were evaluated by computing the capacities of individual sections and comparing the capacities to the actual normal forces and moments.

4. For the combinations of mechanical and thermal loads, the sections were analyzed following the approach shown in "Commentary to ACI 349-R-80."

5. A separate analysis was conducted to determine the effects of thermal, hydrostatic, and hydrodynamic loads on the functionality of the liner. The analysis showed that there was no loss of function.

The results of the structural analysis were summarized in the Licensee's Table A [5], reproduced here as Tables 4-a and 4-b.

Table 4-a. Spent Fuel Pool Load Combinations and Stresses

	MECHANICAL LOADS							MECHANICAL & THERMAL		
	1.25 (D + P + L)				1.25 (D + P + L) + E			1.25 (D + P + L) + E + T		
		(1)				(1)		(2)	(3)	
Location	N (K/ft)	M K-ft/ft	M_m K-ft/ft	Mm/M	N (K/ft)	M K-ft/ft	M_m K-ft/ft	Mm/M	Rebar Stress	ØFY / Rebar Stress
Base Mat	18.1	7.8	23	2.95	13.2	16.7	27	1.6	fs = 12.8 ksi (5)	2.81
East Wall (Canal)	9.6	-22 (fv = 82 psi)	-52	2.36 1.80(4)	25.0	-29.3 (fv = 142 psi)	-43	1.47 1.04 (4)	fv = 142 psi (6)	1.04 (4)
East Wall (Pool)	33.2	122	568	4.66	64.6	163	490	3.0	fs = 35.1 ksi f's = -9.6 ksi	1.03
North Wall	19.8	-96.6	-123	1.27	13.1	-140	-151	1.08	fs = 27.1 ksi f's = -2.65 ksi	1.33
South Wall	18.9	-38.5	-192	4.99	23.0	-76.1	-182	2.39	fs = 35.3 ksi(7) f's = 1.4 ksi	1.02
Middle Wall	28.5	22.1	209	9.46	2.6	32.5	218	6.7	fs = 9.6 ksi f's = 9.0 ksi	3.75

N = Applied normal force on section
M = Applied moment on section
M_m = Maximum elastic moment
(negative sign indicates compressive stress)

fs = Stress in tension steel
f's = Stress in compression steel
fv = Concrete shear stress

Table 4-b. Notes for Table 4-a

(1) Maximum elastic moment for a section with normal force N imposed on it.

(2) Based on a cracked analysis per the methodology discussed in Reference 2, reinforcing steel stress is obtained directly.

(3) Due to the self relieving nature of thermal loads on reinforced concrete, the ratio of maximum moment capacity to actual moment cannot be uniquely determined. As an alternative, the ratio of ϕF_y to computed reinforcing steel stress is provided. Since structural integrity is maintained beyond the allowable stress for thermal loading, the actual safety factor is greater than the ratio reported.

(4) Where shear stresses control, the ratio provided is that of allowable shear stress (conservatively taken as 148 psi) divided by f_v.

(5) This stress represents the maximum stress found in the top layer of reinforcing steel in the thinner center section of the base mat. The top steel in this area is important for transfer of the tensile loads imposed by the lateral water pressure from the pool. The bottom steel in the center portion of the base mat of the pool is used primarily for crack control. Since the base mat rests directly on competent fill material, stresses in this bottom (secondary) steel resulting from thermal loads have no adverse effect on the ability of the pool to transfer load. Therefore, the stress in the bottom steel is not included in Table A.

(6) As shown in Figure 6, this section occurs in the 3 foot wide by 18 inch thick section of the east wall between the two canal walls. Because of the short span of this section, and the large ratio of section thickness to span length, the section does not resist loads in the fashion of a shallow beam; shear stresses control the section capacity. Since shear stirrups are provided, the allowable shear stress in the concrete exceeds 148 psi. The reinforcing steel on the outside face of this section is used only for crack control and is not needed to resist mechanical loads. Therefore, the flexural stresses in this reinforcing steel are not included in Table A.

(7) This represents an average stress (total force on the total section) over the top 10 feet of the outside face horizontal reinforcing steel. The result indicates that the section in general remains below the minimum specified yield stress. However, a maximum stress of 38 ksi has been calculated for the reinforcing steel in the top element of the wall. Realizing the self-relieving nature of the thermal stresses and further acknowledging that the section in general remains elastic, pool function and structural integrity are maintained. Additionally, in accordance with the Turkey Point Updated FSAR, Appendix 5A, Section II, limited yielding is allowable provided the deflection is checked to ensure that the affected Class I systems and equipment are not stressed beyond their allowables. No Class I systems or equipment are attached to this section of wall. REV 10-17-84

3.4.3 Summary of Results

The results of the analysis listed in Table 4-a show that the stress levels under critical loading combinations remain within the specified allowable values, but with one exception. The review showed that:

1. The average bearing stress under the pool slab is below the allowable pressure of 10 ksf for the compacted limerock fill.

2. The maximum tensile stress in steel is shown to be 35.3 ksi compared to the allowable value, F_y = 36.0 ksi.

3. The shear stress in concrete controls the design in the 18-in-thick section of the east wall between the two canals. The ratio of the allowable shear stress to the maximum shear stress is shown to be 1.04.

The exception to stresses within the allowable values concerns the tensile stress in the steel of the south wall, which, in accordance with note 7 of Tables 4-a and 4-b, was computed to be a maximum of 38 ksi. For use in Table 4-a and for comparison to the allowable value, the Licensee averaged the maximum stresses in the steel over the upper 10 ft of wall to yield an average of 35.3 ksi which was compared to the allowable value of 36 ksi. Where this procedure may be questioned, the Licensee also cited Appendix 5A, Section II of Turkey Point's updated FSAR which states that limited yielding is allowable under certain accident conditions. This was reviewed and considered to be acceptable.

In addition, the Licensee's response [10] to USNRC Question No. 8 regarding the effects of 212°F water in the spent fuel pool concludes that stresses for the thermal load remain within the original design allowables. For simultaneous occurrences of seismic and thermal conditions, the Licensee reported [10] that localized steel stresses were slightly higher than the allowable stress of 36 ksi, and justified their magnitudes by the FSAR statement cited in the paragraph above that would permit local thermal stress yielding under certain accident conditions.

After considering this review, evaluation showed that the 212°F pool water temperature resulted from a cooling system pipe break during a seismic

event. Thus, considering the hours it would take to raise the pool water temperature to 212°F and increase the thermal gradient in the pool structure, the short duration seismic event would have been long past so that the structural considerations would remain to be those of thermal and deadweight only. The Licensee's response to USNRC Question No. 8 [10] indicates that analysis showed this to be 38 ksi versus the allowable value of 36 ksi and was justified by statements in the FSAR as discussed above.

This review concludes that the spent fuel structure is acceptable for the higher density loading.

3.5 FUEL ASSEMBLY DROP ACCIDENT ANALYSIS

With respect to accidental dropping of a fuel assembly, the Licensee provided the following:

> "In the unlikely event of dropping a fuel assembly, accidental deformation of the rack will not cause the criticality acceptance criterion to be violated.
>
> For the analysis of a dropped fuel assembly, three accident conditions are postulated. The first accident condition conservatively assumes that the weight of a fuel assembly, control rod assembly and handling mechanism of 3,000 pounds impacts the top end fitting of a stored fuel assembly from a drop height of 3 feet. Calculations will show that the impact energy is absorbed by the dropped fuel assembly, the stored fuel assembly, the cells and rack base plate assembly. If in the unlikely event that two adjacent cells are crushed together for their fuel length, critically, calculations show that $k_{eff} \leq 0.95$. Under these faulted conditions, credit is taken for dissolved boron in the water, and the critically acceptance criterion is not violated.
>
> The second accident condition is an inclined drop on top of the rack. Results will be the same as for the first condition.
>
> The third accident assumes that the dropped assembly (3,000 lbs) falls straight through an empty cell and impacts the rack base plate drom a drop height of 201 inches. The results of this analysis will show that the impact energy is absorbed by the fuel assembly and the rack base plate. Criticality calculations shown that $k_{eff} \leq 0.95$ and the critically acceptance criterion is not violated."

This statement was found to be acceptable during the review.

5. REFERENCES

1. Florida Power & Light Company
   Licensing Report on Turkey Point Units 3 and 4
   Spent Fuel Storage Facility Modifications, Safety Analysis Report
   NRC Docket Nos. 50-250 and 50-251

2. OT Position for Review and Acceptance of Spent Fuel Storage and Handling Applications, U.S. Nuclear Regulatory Commission
   January 18, 1979

3. Franklin Research Center
   Technical Evaluation Report, "Evaluation of Spent Fuel Racks Structural Analysis for Duke Power Company, McGuire Nuclear Station Units 1 and 2"
   August 10, 1984

4. Florida Power & Light Company
   Response to FRC's Request for Information
   October 5, 1984

5. Florida Power & Light Company
   Response to FRC's Questions
   October 1, 1984

6. R. J. Fritz
   "The Effect of Liquids on the Dynamic Motions of Immersed Solids"
   Journal of Engineering for Industry
   pp. 167-173, February 1972

7. D. F. De Santo
   "Added Mass and Hydrodynamic Damping of Perforated Plates Vibrating in Water"
   ASME, Journal of Pressure Vessel Technology
   Vol. 103, p. 175, May 1981

8. C. B. Gilmore
   "Seismic Analysis of Freestanding Fuel Racks"
   Presented at 1982 Orlando Pressure and Piping Conference

9. ASME Boiler and Pressure Vessel Code, Section III, Division 1, Subsection NF, 1980 Edition, Table NF-3292.1-1

10. Florida Power & Light Company
    Response to USNRC Question No. 8 regarding the effects of a sustained pool water temperature of 212°F on the pool and cooling system

4. CONCLUSIONS

Based upon the review and evaluation, the following conclusions were reached:

- The limitations of the modeling technique employed for hydrodynamic coupling of fuel assemblies within a fuel rack cell and of fuel rack modules to other rack modules and the pool walls indicate that the modeling technique contributes known accuracy only for the condition in which the displacements are small compared to the available clearance space. As the Licensee's reported displacements are small, an acceptable use of the hydrodynamic coupling was employed.

- Computed displacements are small relative to clearance between rack modules or between rack modules and the spent fuel pool walls. Thus, the use of two-dimensional dynamic rack module analysis was satisfactory for displacement.

- While the methodology employing two-dimensional nonlinear models and linear three-dimensional models correlated by load correcting factors to introduce the nonlinear impacting load characteristics to the three-dimensional linear model was not considered to be fully acceptable without further validation as a stress analysis method, a detailed step-by-step review of the stress analysis coupled with additional load tabulations requested and supplied indicates that, with the conservatisms noted to be present, the stress analysis is acceptable.

- The spent fuel pool structure has design margin to sustain the higher density floor loadings.

7590-01

UNITED STATES NUCLEAR REGULATORY COMMISSION

FLORIDA POWER AND LIGHT COMPANY

DOCKET NOS. 50-250 AND 50-251

NOTICE OF ISSUANCE OF AMENDMENTS TO FACILITY OPERATING LICENSES AND FINAL DETERMINATION OF NO SIGNIFICANT HAZARDS CONSIDERATION

The U.S. Nuclear Regulatory Commission (the Commission) has issued Amendment No. 111 to Facility Operating License Nos. DPR-31, and Amendment No. 105 to Facility Operating License No. DPR-41, issued to Florida Power and Light Company (the licensee), which revised Technical Specifications for Operation of the Turkey Point Plant Unit Nos. 3 and 4 (the facilities) located in Dade County, Florida. The amendments are effective as of the date of issuance and shall be implemented within 60 days of issuance.

The amendments permit the expansion of the spent fuel storage capacity for Turkey Point Plant Units 3 and 4. This expansion would be accomplished by reracking the existing spent fuel storage pools with neutron absorbing (poison) spent fuel racks composed of individual cells made of stainless steel. Reracking the spent fuel pools would increase the Turkey Point Plant Units 3 and 4 storage capacities from 621 to 1404 spaces for each of the units. The new fuel storage racks will be arranged in two discrete regions within each pool. Region 1 will consist of 286 locations which will normally be used for core off-loading. Region 2 will consist of 1118 locations and will provide normal storage for spent fuel assemblies meeting required burnup considerations. The existing fuel storage racks have a nominal center-to-centerline spacing of 13.7 inches. The new Region 1 fuel storage racks will have a 10.6 inch centerline-to-centerline spacing and Region 2 will be 9.0 inch centerline-to-centerline spacing. The major components of the fuel rack

8412070225 841121
PDR ADOCK 05000250
P PDR

assemblies are the fuel assembly cell, Boraflex (neutron absorbing) material and the wrapper. The wrapper covers the Boraflex material and provides venting of the Boraflex to the pool environment.

The effective multiplication factor (K_{eff}) of the fuel assembly array is designed to maintain the required subcriticality of K_{eff} equal to or less than 0.95 for both Regions 1 and 2. The transmittal letter requesting the amendments dated March 14, 1984, includes the requested Technical Specification changes, the licensee's determination on significant hazards considerations and the supporting Spent Fuel Storage Facility Analysis Report.

The application for these amendments complies with the standards and requirements of the Atomic Energy Act of 1954, as amended (the Act), and the Commission's rules and regulations. The Commission has made appropriate findings as required by the Act and the Commission's rules and regulations in 10 CFR Chapter I, which are set forth in these license amendments.

Notice of Consideration of Issuance of Amendments and Proposed No Significant Hazards Consideration Determination and Opportunity for Hearing in connection with this action was initially published in the FEDERAL REGISTER (49 FR 23715) and in the monthly publication (49 FR 29925) on July 7, 1974. A request for a hearing was filed on July 9, 1984, by the Center for Nuclear Responsibility, Inc. and Ms. Joette Lorion.

Under its regulations, the Commission may issue and make an amendment immediately effective, notwithstanding the pendency before it of a request for a hearing from persons, in advance of the holding and completion of any required hearing, where it has determined that no significant hazards consideration is involved.

The Commission has applied the standards of 10 CFR 50.92 and has made a final determination that these amendments involve no significant hazards consideration.

The basis for this determination is contained in the Safety Evaluation related to this action. Accordingly, as described above, these amendments have been issued and made immediately effective and any hearing will be held after issuance.

A separate Environmental Assessment has been prepared pursuant to 10 CFR Part 51. The Notice of Issuance of Environmental Assessment and Finding of No Significant Impact was published in the FEDERAL REGISTER (49 FR 45514) on November 16, 1984.

For further details with respect to the action see (1) the application for the amendments dated March 14, 1984, as and supplemented on July 2 and 23, August 14 and 22, September 10 and 28, October 5, 9, 18 and 26, and November 16, 1984, (2) Amendment Nos. 111 and 105to Facility Operating License Nos. DPR-31 and DPR-41 (3) the Commission's related Safety Evaluation and (4) Environmental Assessment and Notice of Issuance of Environmental Assessment and Finding of No Significant Impact. All of these items are available for public inspection at the Commission's Public Document Room, 1717 H Street, N.W., Washington, D.C., and at the Environmental and Urban Affairs Library, Florida International University, Miami, Florida 33199. A copy of items (2), (3) and (4) may be obtained upon request addressed to the U.S. Nuclear

Regulatory Commission, Washington, D.C. 20555, Attention: Director, Division of Licensing

Dated at Bethesda, Maryland, this 21st day of November 1984.

FOR THE NUCLEAR REGULATORY COMMISSION

David L. Wigginton, Acting Branch Chief
Operating Reactors Branch No. 1
Division of Licensing