DRAFT APPLICATION
Volume 2

AMENDED AGREEMENT FOR URANIUM RECOVERY REGULATION

STATE OF UTAH

DIVISION OF RADIATION CONTROL
UTAH DEPARTMENT OF ENVIRONMENTAL QUALITY

NOVEMBER 2001

ATTACHED APPENDICES

VOLUME 2

APPENDIX D: INSPECTION PROCEDURES

- Routine Procedures
- Allegations/Investigations
- Closeout Inspections and Surveys
- Follow-up Inspections
- Assessment of Licensee's Performance
- Policy on Inspection Reviews/Routing Sheet
- DRC Enforcement Procedures
- NRC Inspection Manual, NMSS/URB, Chapter 2801 and Inspection Procedure 87654
  - Uranium Mill and 11e.(2) Byproduct Material Disposal Site and Facility Inspection Procedures
  - Uranium Mill Site Decommissioning Inspection

APPENDIX E: LICENSING PROCEDURES

- Technical Procedures for License Review
- Expired License Policy Procedure
- NRC Regulatory Guides 3.11, 3.11.1, 3.51, 3.56, 4.14, 8.22, 8.25, 8.30, and 8.31

APPENDIX F: INSTRUMENTATION AND CALIBRATION PROCEDURES

- Equipment Inventory
- Instrument Calibration Procedures
- Procedures for Sample Analysis

Appendix D

TABLE OF CONTENTS

Utah State Division of Radiation Control
Administrative Policy Document

Inspection Guidance

ROUTINE PROCEDURES
(Sections 1.00 through 4.99)

SECTION	TITLE OR CONTENTS OF SECTION	PAGE
1.00	Overview of Routine Procedures	1
2.00	General License Procedures and Requirements	2
2.01	Definition of inspection	2
2.02	Unannounced Inspections	2
2.03	Preparation for an Inspection	2
2.04	Performing the inspection	2
2.05	Inspection Methods	3
2.06	Closeout of Inspection with DRC Management	3
2.07	NOV'S General Guidance.	3
3.00	Specific Requirements	4
3.01	Written Inspection Plans	4
3.02	Management Meetings - Entrance and Exit Interview	4
3.03	Entrance Interview	4
3.04	Exit Interview	5
3.05	Interview Guidance	5
3.06	Permissible Frequency of Inspection	6
3.07	Extension of Interval	7
3.08	Reduction of Inspection Frequency	8
3.09	Telephonic Contacts and Inquiries	9
3.10	Inspection Activities didn't Result in a Completed Inspection	10
3.11	Inspection - Waste Disposal Activities [See UCA 19-3-202(1)(b)]	11
4.00	Scheduling Inspections	11
4.01	Basis of Scheduling	11
4.02	Radiography Inspections	11
4.03	Combining Inspections	12
4.04	Performance Indicators	12
4.05	Inspection Before License Renewal	12
4.06	Change in Priority Based on Change in Type of Program	12

TABLE OF CONTENTS

SECTION	TITLE OR CONTENTS OF SECTION	PAGE
4.07	Inspection of General Licensees	13
4.08	Inspections of Activities Under Reciprocity	13
4.09	Construction and Preoperational Inspections of Irradiators	13
4.10	Special Inspections	13
	ALLEGATIONS/INVESTIGATIONS (Sections 5.00 to 9.99)	
5.00	General Overview - Allegations/Investigations	14
6.00	Inspection Requirements	14
7.00	Specific Guidance - Allegations/Investigations	15
7.01	Confidentiality	15
7.02	Document Security	15
7.03	Origin of Concerns and "Off-the-Record" Statements	15
7.04	Instrumentation for Incident Investigation	16
7.05	Conducting an Incident Investigation	16
7.06	Advisory Role of Inspector	16
7.07	Determination of Nature and Severity of Hazard	16
7.08	Preparing and Submitting an Incident Investigation Report	17
7.09	Staff Requirements for Responding to Incidents	17
7.10	Complaints or Allegations Response	18
7.11	Answering Allegers Concerns	18
7.12	Verbalizing Your Concerns	18
7.13	Reportable Misadministrations	18
7.14	Specific Information of Allegers Concerns	19
7.15	Specific Role of Section Manager/Alleger/Staff	20
7.16	Provision of Allegation Summary	20
7.17	Preparing for a Complaint Investigation	20
7.18	Conducting a Complaint Investigation	20
7.19	Preparing and Submitting a Complaint Investigation Report	21
7.20	Conducting Interviews	21
7.21	Participating Parties at An Interview	21
7.22	Third parties may be present	21
7.23	Surveys	22

TABLE OF CONTENTS

SECTION	TITLE OR CONTENTS OF SECTION	PAGE
7.24	Sampling Procedures	22
7.25	Sealed Source Leak Tests	23
7.26	Soil, Air, Water & Vegetation Samples	23
8.00	Incidents Requiring Prompt Investigation	23
8.01	Possible Overexposure	23
8.02	Potential Release or Discharge of Radioactive Materials	24
8.03	Lost or Stolen Sources of Radiation	25
8.04	Other	25
8.05	Cases Where Prompt or Delayed Inspections May be Necessary	26
9.00	Abnormal Events	26
9.01	Reports of Abnormal Events to Other Agencies	26
9.02	Notification of Abnormal Events to Section Managers	27

CLOSEOUT INSPECTIONS AND CLOSEOUT SURVEYS
(Sections 10.00 through 11.99)

10.00	General Overview of Closeout Inspections & Surveys	28
11.00	Inspection Requirements - Closeout Inspections	28
11.01	Closeout Review	28
11.02	Licensee Obligations Prior to Closeout Inspection	29
11.03	Confirmation of the Disposition of Materials	29
11.04	The Conduct of Confirmatory Surveys	30
11.05	Review of Reports and Records	31
11.06	Assessment of the Burial of Waste	31
11.07	Closeout Inspection Report	31

FOLLOW-UP INSPECTIONS
(Section 12.00 through 13.99)

12.00	General Overview - Follow-up Inspections	32
13.00	Follow-up Inspection - Requirements	32
13.01	Follow-up Inspection	32
13.02	Identified Noncompliance Items	33

TABLE OF CONTENTS

ASSESSMENT OF LICENSE PERFORMANCE
(Section 14.00 through 15.99)

SECTION	TITLE OR CONTENTS OF SECTION	PAGE
14.00	General Overview	33
15.00	Inspection Requirements	34
15.01	Inspection Preparation	34
15.02	Licensees Resolution of Problems	34
15.03	Corrective Action Programs	35
15.04	Operating Experience Feedback	35
15.05	Self-Assessment Activities	36

ATTACHMENTS

Attachment 1	Radioactive Material License Inspection (Table)
Attachment 2	Telephone - Evaluation of Possession and Use of Radioactive Material (for category IV & V licenses only)
Attachment 3	Follow-up Letter For Telephone Contact #1
Attachment 4	Follow-up Letter for Telephone Contact #2
Attachment 5	DRC Incident Report
Attachment 6	DRC Form-14
Attachment 7	Event Reporting in the Agreement States (Handbook) NRC Handbook SA-300 Feb 20, 1998
Attachment 8	DRC - Medical Misadministration Report
Attachment 9	PEF'S Performance Evaluation Factors/Appendix III Inspection Of Agreement State Licensees, 09/08/97.

Utah State Division of Radiation Control
Administrative Policy Document

Inspection Guidance

ROUTINE PROCEDURES
(Sections 1.00 through 4.99)

1.00 OVERVIEW OF ROUTINE PROCEDURES

This document is proposed as a method to clarify general policy for the Radioactive Materials Inspection Programs as follows:

To define specific requirements for a performance-based materials inspection program that gives licensees credit for good performance by extending the interval of the next inspection and requires poor performers to be inspected more frequently.

To place the major emphasis of the materials inspection program on timely and thorough follow-up of events.

To establish inspection priorities for all licensees and types of inspections.

To aid in the achievement of a consistent process of inspection for materials licensees.

The Radioactive Materials Inspection Program designates priorities for various types of inspections. Reactive inspections are considered as having the highest priority, followed by core inspections. Reactive inspections include allegations, misadministration, overexposure, loss or release of significant quantities of radioactive materials and incident or special investigation inspections. Core inspections include initial and routine inspections. Termination inspections for licensees that used sealed sources or short lived isotopes would be of the lowest priority and are performed as resources permit.

Each new license issued is reviewed by a Division of Radiation Control (DRC) license reviewer. The reviewer determines the license category and inspection priority and schedules the initial inspection. License category, inspection frequency, DRC/NRC program codes and DRC/NRC Priority codes can be identified by use of, Table A, Radioactive Material License Inspection Program, dated, September 1998 (Attachment 1). If a license involves more than one type of use, the type associated with the highest priority (most frequent) inspection shall establish the inspection priority.

2.00 GENERAL LICENSE PROCEDURES and REQUIREMENTS

2.01 Definition of inspection

An inspection is the act of assessing licensee performance to determine whether the licensee is using radioactive material safely and whether an individual or organization is in compliance with established standards, such as rules, license conditions, and the licensee commitments submitted in support of a license and incorporated by "tie down" conditions. Inspections involve a visit to a licensee's facility and/or temporary job site by a representative of the Executive Secretary, observations of licensed activities, interaction with licensee personnel, and transmission of the inspection findings. Pre-licensing visits or telephonic communications are not considered inspections.

2.02 Unannounced Inspections

All inspections contain certain routine steps or requirements. One major concern is that all routine materials inspections should be performed on an unannounced basis. Additional routine procedures to be taken by the inspector are described below.

2.03 Preparation for an Inspection

First the inspector prepares for the inspection by reviewing appropriate background material (e.g., license, past inspection reports, incident reports, related allegations, and other pertinent information). The inspector identifies the location of the licensee and works out travel arrangements. The inspector should develop an itinerary and discuss special aspects of the inspection with his or her supervisor. Finally, the inspector selects appropriate and calibrated radiation detection instrumentation to take and acquires the necessary inspection forms.

2.04 Performing the inspection

The second part of the process is where the inspector conducts the onsite inspection. This begins with an entrance meeting with appropriate licensee personnel. Inspectors should ensure that licensee management is made aware of the inspection. Observations of licensee operations, interviews with staff, document review to complement and support inspector observations, and radiation surveys to obtain independent and confirmatory measurements should then be conducted. Emphasis should be placed on observing licensee performance as it relates to staff training, equipment operation and adequacy, overall management of the licensed program, and integration of safety. Review of licensee records and other documents should be directed toward verifying that

current operations are in compliance and further review of "historical" records should only occur if the current records are out of compliance and the inspector believes it necessary to determine the presence of a prevalent or persistent problem. Finally, the inspection concludes with an exit meeting with licensee management.

2.05 Inspection Methods

To the maximum extent practicable, inspectors should ascertain whether a licensee is in compliance with specific provisions of the license and the rules by direct observation of work activities, demonstrations of how the licensee performs a DRC-required test or other activity, interviews of licensee employees, and, in appropriate cases, by independent measurements of radiation and air concentrations. Less reliance should be placed on determining compliance based solely on information in licensee records.

2.06 Closeout of Inspection with DRC Management

After returning from an inspection trip, the inspector shall discuss the results of the inspection trip with his or her supervisor. This discussion should be sufficient to alert management to significant enforcement, safety, or regulatory issues. This meeting need not be documented, but it should be held in all cases. To complete the inspection, the inspector documents the inspection results in accordance with guidance.

2.07 NOV'S General Guidance.

The Notice of Violation (RAMinsp.wcm at I\rad\director\let_macs\winmacs) explains that the notice is sent pursuant to the provisions of R313-14 and that the licensee should provide, within 30 days, a written statement or explanation which includes:

a. Corrective steps which have been taken and the results achieved;

b. Corrective steps which will be taken to avoid further violations; and

c. The date when full compliance will be achieved

Other specific responses or actions may be required in enforcement letters. The inspector assigned to follow-up on the licensee's actions should therefore conduct a careful review of the enforcement letter. In addition, inspection reports may contain concerns with licensee performance, valuable as background information to the inspector.

3.00 SPECIFIC REQUIREMENTS

3.01 Written Inspection Plans

Inspections of major licensees shall include all of the afore mentioned general requirements and should include the use of an written inspection plan. Inspection plans should be developed for all routine inspections of major licensees and all team inspections. Major licensees include those programs that routinely use large quantities of radioactive material, such that special facilities and procedures are necessary for handling and control (i.e., broad-scope academic, broad-scope medical licensees, and large manufacturers). Inspection plans may also be developed for any other inspections, as decided by the Executive Secretary. The inspection field notes should be documented (a Supplemental Comment will suffice) to indicate whether or not an inspection plan was prepared. After the inspection, the inspection plan may be discarded.

a. The inspection plan sets specific requirements and priorities to aid in the achievement of a consistent process for inspection of materials licensees.

3.02 Management Meetings - Entrance and Exit Interview

The objective of these meetings and interviews is to assure that licensee management is aware of the overall scope and schedule for the inspection to be performed and that they are apprized of the preliminary findings of the inspection including any apparent noncompliance with regulatory requirements or other safety related concerns prior to the inspector leaving the site.

3.03 Entrance Interview

a. If more than one inspector is involved, they will review the scope of the proposed inspection prior to the entrance interview with the licensee and confirm at this time that only one inspector (the lead inspector) will be spokesperson during entrance and exit interviews.

b. An entrance interview shall be conducted with the most senior licensee representative available who is directly responsible for the areas to be inspected.

c. During the entrance interview, the inspector should address the following as related to the functional areas to be examined during the inspection, as appropriate.

(1) Status of resolution of outstanding inspection items.

(2) Status of corrective action relating to licensee commitments in correspondence.

(3) Scope of inspection including estimated duration.

(4) Records, procedures or documents to be reviewed.

(5) Personnel to be interviewed.

(6) Special tests or activities to be witnessed which require coordination between the inspector and the licensee.

3.04 Exit Interview

a. If the lead inspector has allowed the assistant inspector to conduct inspection activities independently, the findings of the assistant inspector(s) must be communicated to the lead inspector prior to the exit interview.

b. At the conclusion of each inspection, an exit interview shall be conducted with the most senior licensee representative at the location of the inspection.

c. During the exit interview, the licensee representative should be made aware of the preliminary inspection findings including any apparent items of noncompliance with requirements of Utah Radiation Control Rules, safety related concerns, or unresolved items identified during the inspection. Significant safety concerns must receive immediate attention from the licensee.

3.05 Interview Guidance

a. Do not discuss trivia, don't ramble, present your point concisely and support your position with facts.

b. When the senior most licensee representative is not available, the interview will be conducted with the next lower level of licensee management.

c. At the entrance interview, if desired, the licensee representative may be given an indication of the tentative schedule for discussing or reviewing

selected inspection items with various licensee staff personnel.

d. Certain inspection items involving visual observations and/or records review may be performed better when they are unannounced. If the inspector believes that prior notification is undesirable, then the inspector may elect to not discuss the items during the Entrance Interview.

e. Identification of personnel to be interviewed may enhance inspector efficiency and give the licensee the opportunity to have the most knowledgeable individual present to respond in the areas being inspected. If no prior notification to the licensee of an area to be inspected is planned, then this item is not to be discussed during the opening interview.

f. The licensee should have been informed of preliminary negative findings in a timely manner before the exit interview - no surprises.

g. If items of noncompliance or safety concerns are identified that affect continued operation of a facility, in violation of significant regulatory requirements, or the facility is operating in an unsafe manner, prompt corrective action must be initiated by the licensee. The inspector should not leave the site until the concern is fully understood by the licensee and corrective action has been initiated. If disagreement exists between the inspector and the licensee as to the magnitude of the concern relative to continued operation, the inspector's section manager should be notified immediately.

3.06 Permissible Frequency of Inspection

To achieve the goals of cost saving and efficient use of staff time, inspections (other than initial inspections) may be performed at a frequency other than that defined by the license category system. However, the frequency of inspection for a licensee should not fall outside the following points:

Type of Inspection	Permissible Frequency
Initial inspections of new licensees	Should be within 6 months for categories I through V.
Inspection of licensees in Categories I, II, III	Interval between inspections may vary by $\pm$ 25%
Inspection of licensees in Categories IV, and V	Interval between inspections may vary by $\pm$ 50% of inspection interval length.

If escalated enforcement action has taken place, an inspection may be conducted within one year following closeout of the escalated enforcement action.

a. The inspection frequency assigned to a licensee is based on the potential hazard of the licensee's programs. For example, a license with an inspection frequency of one year is one in which there is the greatest potential for hazards in health and safety; this priority requires the most frequent inspections because of the nature of the operations. On the other hand, an inspection frequency of 5 years involves little potential hazard to health and safety and requires less frequent inspection.

b. The inspection priority assigned to a license or registration is numerically the same as the inspection frequency in years. For example, a license assigned an inspection frequency of 5 years is an inspection priority V license.

c. When a new license is issued, it shall be assigned an initial inspection priority and scheduled for an initial inspection. If a license involves more than one type of use, the type associated with the most frequent inspection shall establish the inspection priority.

d. The interval between inspections may be extended (increased) beyond that specified by the priority system on the basis of good licensee performance. The main consideration in extending inspection intervals should be evidence of a well-managed and effective radiation safety program that shows a history of compliance. Specifically, the inspection frequency may be extended, for licensees meeting the following conditions:

1. the violations identified during the licensee's current and preceding inspections are Severity Level IV; and

2. the licensee has not had a significant program change since the preceding inspection. Significant program changes should relate to changes in the scope or type of operations, changes in the authorized materials or possession limits, changes in key personnel, or changes in locations of use. (NOTE: Extension should not be considered for licensees who have undergone significant program changes, to ensure that the licensee can maintain adequate performance over the next inspection period.)

3.07 <u>Extension of Interval</u>

Licensees that meet the above criteria may have their inspection interval extended as follows:

Priority I	increased up to 2 years
Priority II	increased up to 3 years
Priority III	increased up to 5 years
Priority IV	increased up to 6 years

For instance, a radiographer (priority I) who meets the above criteria may have his/her next inspection due date lengthened to 2 years from the last inspection. A portable gauge licensee (priority III) that meets the above criteria may have its next inspection due date lengthened to 5 years from the last inspection (rather than 3). The extension shall be valid only until the next inspection, but may be renewed on the basis of repeated favorable findings.

a.. The designated inspection priority for these licensees should not be changed in the Division database. However, the inspector is responsible for initiating the change in the "next inspection date" field on the inspection field form. To identify the extended inspection date in the Division database, the data entry person shall use the "next inspection date" from the inspection field form and enter this date in the database.

b. To document the extension in the interval between inspections, a brief note (e.g., on the inspection form cover sheet) should be written by the inspector, approved and signed by the inspector's immediate supervisor, and placed in the licensing file.

c. The decision to extend the inspection should be made immediately after each routine inspection.

3.08 Reduction of Inspection Frequency

The interval between inspections may be reduced (shortened) and inspections conducted more frequently than specified in the priority system on the basis of poor licensee performance. The main consideration in reducing the inspection interval should be evidence of moderate to severe problems in the licensee's radiation safety program. Poor compliance history is one indicator of such problems. Lack of management involvement or control over the radiation safety program is another indicator. Specifically, licensees that meet the following conditions should be considered for reduction in inspection interval:

a.. a Severity Level I, II, or III violation on the most recent inspection, or

b. issuance of an Order or escalated enforcement on the most recent inspection, or

c. if a "management paragraph" appears, in the cover letter transmitting the notice of violation on the most recent inspection (i.e., a paragraph that requires the licensee to address adequate management control over the licensed program), or

d. repetitive violations.

The above list is not exhaustive; the inspection frequency can and should be reduced for any other reason deemed pertinent by the Section Manager. An example would be an enforcement conference where the outcome did not include escalated enforcement action, but did indicate the need for the licensee to improve some aspect(s) of its compliance program.

Licensees that meet the above criteria may have their inspection interval reduced by any length. For instance, a priority IV licensee with a poor performance record could be rescheduled for its next inspection in 2 years, rather than 3. A priority I licensee with a Severity Level III violation could be rescheduled for its next inspection in 6 months. The reduction shall be valid only until the next inspection, but the Section Manager shall consider the results of the next inspection when determining whether the reduced frequency should be continued, changed, or returned to normal.

The designated inspection priority for these licensees should not be changed in the Division database. However, the "next inspection date" field in the database should be changed to contain the reduced date for the next inspection.

To document the reduction in the interval between inspections, a brief note (e.g., on the inspection form cover sheet) should be written by the inspector, approved and signed by the inspector's immediate supervisor, and placed in the licensee's file.

3.09 Telephonic Contacts and Inquiries

Some inquiries may be done by telephone using a questionnaire to determine the status of the activities of low priority licenses. This is limited to inspection category V and General licenses.

Some inquiries may be done by telephone to: (1) determine some facts about the licensed program such as reminding the licensee that its license is near expiration,

(2) determine if there is sufficient activity to conduct an inspection (radioactive material may be in storage), or (3) determine if the licensee currently possesses radioactive material.

These are only examples. There may be other reasons to make telephonic inquiries of licenses regarding license expiration, decommissioning, and so forth. Telephone inquiries generally do not involve direct inspection effort, whereas telephone contacts do. When considerable travel is required, inspectors may telephone licensees to verify that a routine inspection can be performed before undertaking such travel.

Notification that a license has expired or is being processed for termination will require prompt action to ensure that licensed material has been properly disposed of and areas wherein material was used can be safely released to unrestricted use. Final action, including inspection and confirmatory survey, if necessary, should be conducted as soon as possible. Telephone inquires will usually be necessary to initiate this process.

Procedures for using the telephonic contacts are included as Attachments.

a. Evaluation of Possession and Use of Radioactive Material, for use with inspection category IV And V Licensees only. (Attachment 2)

Follow- up Letter for Telephone Contact #1 (Attachment 3)

Follow-up Letter for Telephone Contact #2 (Attachment 4)

3.10 Inspection Activities Which do not Result in a Completed Inspection

The following sections outline conditions where it is considered that an inspection has not taken place.

a. Before scheduling an initial inspection, determine if the licensee possesses any radioactive material. An initial inspection should not be attempted if it is determined that the licensee does not possess licensed material. An inspection should not be considered to have been performed if, after arriving on an announced initial inspection, it is found that no radioactive material is possessed. Before attempting an initial inspection, the licensee should be contacted by telephone.

b. An inspection should not be considered to have been performed (1) if, after arriving on an unannounced inspection, it is found that no radioactive material is possessed or used because of disposal or storage of the material and no inspection activities are performed or (2) if the licensee or

licensee's representatives are not available to assist with the inspection and the inspector is unable to perform inspection activities. On the other hand, if it is possible to inspect records or other items according to license conditions or DRC rules, such activities should be inspected and be recorded as an inspection whether the radiation safety officer (RSO) is present or not, including those licenses that have been terminated.

c. For any situation where an inspection was not performed as defined above, the inspector should not prepare a notification to the licensee and should not record the attempted inspection as "an inspection." However, a note should be placed in the licensee/registrant file to record the reason an inspection could not be performed and giving a date when the next inspection should be performed.

d. Telephone contacts are not inspections. Therefore, the results of these activities should not be recorded in a Notice of Violation.

3.11 Inspection of Waste Disposal Activities [See UCA 19-3-202(1)(b)]

In connection with all inspections of licensees who generate radioactive waste, the following information will be obtained:

1. Characteristics of waste stream (especially any mixed waste, i.e. physical form, volume, activity/nuclides, etc.).

2. Frequency of transfer to burial site.

3. Involvement of waste disposal brokers.

4. Type of waste packages or containers.

5. Identity of carrier who transports waste to burial site.

6. Volume reduction or "treatment" methods utilized at the facility.

4.00 SCHEDULING INSPECTIONS

4.01 Basis for Scheduling

An inspection may be completed earlier or later than scheduled for the purpose of the efficiency realized in inspector travel time. The efficiencies of travel time should be balanced against the basic purpose of the inspection priorities, that is, effective use of an inspector's time versus the potential hazards in a licensee's operation. A low-priority licensee should not be over inspected just because an inspector is in the area of the facility. Inspection of a high-priority licensee

should not be unduly delayed merely for scheduling purposes.

4.02 Radiography Inspections

For licensees authorized to work at temporary jobsites, inspectors should plan to include an unannounced inspection of licensed activities at these locations, when possible, in addition to inspecting licensed activities at the licensee's principal place of business. During the inspection of the licensee's principal place of business, the inspector should, through discussions with the licensee and review of licensed material utilization records, ascertain if the licensee is working at these temporary jobsite locations. To assist the inspector in locating these locations, the customer of the licensee may be contacted and the temporary jobsite inspection scheduled when the licensed activities are in progress. The licensee's customer should be requested not to notify the licensee of the inspection. If an unannounced inspection of these locations is not possible, then the inspector should attempt to arrange an announced inspection at temporary jobsites.

4.03 Combining Inspections

If a licensee holds more than one kind of license/registration (that is, of different license categories or a combination of licenses and registrations), a single inspection may be scheduled whenever practicable to aid in more effective use of inspector's time spent in travel status. In the determination to combine inspections on a continuing basis, consideration should be given to "over inspecting" a lower priority license versus the need and desirability of inspecting a licensee's total activities for a more complete picture of its safety and compliance performance. The priority designations of the lower priority license registrations shall not be changed in these cases; the more frequent inspections of lower priority license/registrations shall be handled only in the scheduling process.

4.04 Performance Indicators

Performance Indicators shall be used by inspectors (See Attachment 9) to determine if the licensee is conducting its operation in a way, that may, if not corrected or changed, lead to violations. There is no regulatory basis for most performance indicators, but there is a basis in sound radiation protection.

4.05 Inspection Before License Renewal

Before renewing a license in categories I, II, or III, the compliance inspection history of the licensee should be checked to determine whether additional requirements should be made a part of the license, particularly for those licensees that have a history of marginal performance. In some cases, it may require an on-site inspection to determine if the license should be renewed, based on prior performance and up-to-date information on the licensee.

4.06 Change in Priority Based on Change in Type of Program

A change to a lower or higher inspection frequency should be made when it is determined that the licensed activity being carried out warrants a lower or higher inspection frequency. Any changes from the usual priorities shall be authorized by the Section Manager and a note placed in the licensees/registrants file.

A reduction from a category IV frequency to a category V frequency may be done if:

a. it is not likely that radiation workers will be exposed to airborne contaminants which exceed 10% of the airborne radioactive limits listed in R313-15-203

b. it is not likely that a radiation worker will exceed 25% of the radiation dose limits listed in R313-15-201 or will not need to use personnel monitoring devices

c. it is not likely that work with radioactive material will result in a spill causing spread of contamination

d. complex surveys are not required

e. waste disposal is not required

4.07 Inspection of General Licensees

Inspections of general licensees are to be performed once per five years. Inspections should also be made to resolve allegations, complaints, or other indications of an unsafe practice or a case of noncompliance, or when such an inspection is directly pertinent to an inspection involving a specific license. Any inspections conducted under these provisions should be done while other activities are being conducted in the same area of the State.

4.08 Inspections of Activities Under Reciprocity

Inspectors shall make every reasonable effort to conduct inspections of licensees working in the state under reciprocity at the same frequency as required by NRC. (See NRC Manual Chapter 1220, Appendix III, 9/8/97).

4.09 Construction and Preoperational Inspections of Irradiators

Construction and preoperational inspections of new walk-in or pool-type irradiator facilities shall be a regular part of the inspection program. The inspections will require the assistance of engineering inspectors and will require

that the materials staff identify the parts of the facility that are especially important to safe operations of the irradiators.

4.10 Special Inspections

Special inspections are reactive in nature and cannot be scheduled on a routine basis. Occasions for which a special inspection should be performed include, but are not necessarily limited to the following:

1. Licensee report of an incident where onsite inspection is needed to determine the facts of the case, the cause of the incident, and adequacy of the licensee actions to correct the cause of the incident, mitigate its consequences, and prevent recurrence. (See Allegations/Investigations, Sections 5.00 through 9.99)

2. Follow-up within 1 year of escalated enforcement to determine whether the licensee has taken the actions to which it committed itself in its response to an enforcement order. (See Follow-up Inspections, Sections 12.00 through 13.99)

3. Obtain information as to the validity and significance of an alleged unsafe operations. (See Allegations/Investigations, Sections 5.00 through 9.99)

ALLEGATIONS/INVESTIGATIONS
(Sections 5.00 to 9.99)

5.00 GENERAL OVERVIEW - ALLEGATIONS /INVESTIGATIONS

This document outlines the procedures used to evaluate and respond to complaints, allegations, and incident notifications and provides guidance on how to perform surveys necessary to evaluate the extent of a radioactive materials incident.

The following guidelines are used to determine whether an investigation is necessary when incidents or complaints are reported to the Division. Included in this section, in addition to the guidelines, are procedures to be followed when conducting an investigation and the materials needed for such an investigation.

6.00 INSPECTION REQUIREMENTS

Prior to conducting the inspection, the allegation will be reviewed by the Section Manager. The Section Manager will, with the concurrence of the Division Director, determine if the issues raised in the allegation warrant a physical investigation or other option, such as referring the matter to the licensee for resolution. The decision to devote

a special inspection to the allegation or to review the issues during a routine inspection will generally be made at this time.

Allegations that appear to involve complex issues or significant safety, security, or confidentiality issues should be assigned to a senior inspector, if possible. Other allegations may be assigned to senior or non-senior inspectors, as appropriate.

Inspections to review and resolve allegations are to be conducted in a manner similar to that used for any inspection designed to review a limited aspect of the licensee's program. The inspector must not inform the licensee that the inspection is being conducted to review an allegation unless instructed to do so by the Section Manager or the Division Director. The inspection should not focus too narrowly on the issues raised in the allegation, but should include the general area of the licensee's program within which the alleged activities occurred or failed to occur.

Matters of confidentiality are preferably settled prior to the inspection, and the inspector should clearly understand the alleger's confidentiality status and the alleger's feelings regarding the possibility of revealing his/her identity. The inspector should also be aware of procedures used to safeguard allegation documents, to communicate with the alleger and the licensee. Note however, that because of safety concerns or urgency dictated by other considerations, the Section Manager or Director may decide to send an inspector before confidentiality issues are resolved.

7.00 SPECIFIC GUIDANCE - Allegations/Investigations

7.01 Confidentiality

Allegers are granted confidentiality only in non-routine cases where it is deemed necessary for purposes of resolving the allegation. Nevertheless, the identity of the alleger should be protected as much as possible, even when confidentiality is not granted. Any information connected with the allegation should be provided to other persons, within or outside the Division of Radiation Control (DRC), only on a need-to-know basis. Files should be secured when not in use, and any documents that are released for general use should be redacted. Exceptions to the above are those cases in which it is clearly documented that the alleger has no objection to making his/her identity known, and releasing the alleger's identity would significantly facilitate review and resolution of the allegation.

7.02 Document Security

To help maintain anonymity, the inspector should avoid taking any documents that contain information that may reveal the nature of the inspection or the identity of the alleger, unless it is considered important to the conduct of the inspection. In addition, care should be taken to assure that documents about the allegation are protected from inadvertent disclosure. Documents related to an

allegation in which confidentiality was formally granted must be kept in a secure file cabinet or safe, and access to such documents granted only on a need-to-know basis, as determined by the Division Director or Section Manager.

7.03 Origin of Concerns and "Off-the-Record" Statements

Should the licensee ask whether the inspection is being conducted in response to an allegation, the inspector should inform the licensee that the inspection includes a review of concerns which the DRC has with regard to the licensee's facility or operations. The inspector should decline to comment further on the origin of the concerns. The inspector should also remember that "off-the-record" Statements with licensee personnel are not acceptable. Any information provided, including that which is considered by the informant to be "off-the-record", may be used by DRC in resolving the allegation or for any other purpose.

7.04 Instrumentation for Incident Investigation

Preparation for an incident investigation is similar to preparation for an inspection. The file must be carefully reviewed to determine the types and quantities of radioactive materials potentially involved and then all equipment deemed necessary for the investigation should be assembled. This equipment should be sufficient to ensure that the investigation is conducted safely and thoroughly.

7.05 Conducting an Incident Investigation

Each incident must be considered on an individual basis. After notifying the facility management upon arrival (if possible, and depending on the immediate steps needed to protect the public health and safety), the inspector should make a preliminary assessment of the situation at the incident site. The first consideration is to protect the employees and the public from any radiation hazard. Should a radiation hazard exist, assure that the area is secure and escalation of the hazard is not probable. If it is obvious that no radiation hazard has existed or does exist, documentation of this is still necessary.

7.06 Advisory Role of Inspector

After the immediate health and safety problems have been addressed, the inspector's role should be advisory only. The licensee, registrant, or local emergency response personnel is responsible for performing any corrective action. It is important to consider the consequences of all possible recovery operations in order to select the best solution with regard to the circumstances surrounding the hazard. When a course of action for recovery has been determined, monitor the

procedures to ensure they are conducted within the ALARA concept.

7.07 Determination of Nature and Severity of Hazard

At this time, interview personnel involved to determine the nature and severity of the hazard and to determine possible corrective actions. These interviews should be performed as soon as possible to assure complete, independent, observations are obtained from all parties. Photocopies of pertinent records should also be acquired whenever possible. If the inspector suspects that criminal practices have occurred, the Section Manager must be contacted and arrangements made for law enforcement personnel to be notified.

Completion of an investigation involves the gathering of all pertinent information not previously obtained. This may include review of records, interviews, surveys, samples, and calculations of exposures to individuals.

7.08 Preparing and Submitting an Incident Investigation Report

At the conclusion of an investigation, a thorough report shall be completed. Investigation reports are normally of the narrative form submitted as a memorandum to the license or registration file and the incident/investigation file. The usual format consists of a description of the complaint and identification of the persons interviewed and/or participating in the investigation. The body of the narrative can then be given chronologically as the inspector proceeded through the investigation. Interviews with individual may be set out by indenting and /or underlining so that the information and its source are readily identifiable.

The narrative of the report should end with the concluding remarks of the inspector which summarize the facts. Personal opinions should not be stated in the report. Apparent violations found should be listed (in the same format as inspection reports) at the end of the report. If you are unsure whether one or more of the apparent violations are valid, you can include a section indicating possible violations.

Attachments of records, photographs, surveys, and other items shall be identified as Attachment A, B, C, etc, and added to the end of the report. Be sure that the attachments are appropriately referenced in the body of the report. Photographs should be attached to a sheet of paper. Each photograph must be labeled (date, person taking photograph, description of item of interest in photography, etc.). Often, the investigation occurs in stages and it may be necessary to prepare a number of smaller reports in order to submit the reports in a timely fashion.

7.09 Staff Requirements for Responding to Incidents

Division staff responding to incidents are to:

a. Notify the Section Manager when radiation incidents occur. Indicate at the time of management notification, if the incident meets Abnormal Occurrence Criteria. (See Sections 7.15 and 9.02)

b. Provide written documentation of radiation incidents and submit these to the Section Manager for review.

c. Track radiation material incidents until they are closed.

d. Complete DRC "Event Report" (Attachment 5) or DRC Medical Misadministration Report, (Attachment 8) (whichever is appropriate) when radioactive materials are the cause of an incident.

e. Place the completed report in the appropriate file folder located in the front of the Division's radioactive material licensee "A" file drawer. See that copies of the report are placed in all appropriate files such as radioactive material licensee, registrant, or reciprocity files.

7.10 Complaints or Allegations Response

Any allegation made by any individual or group, received in person by a Division inspector, either verbally or (preferably) in writing, and regarding a possible radiation hazard, is considered a complaint. The Division should respond to each complaint within a 72-hour period. The response may be sooner depending on the potential radiation hazard. Complaint notifications shall be immediately referred to the Section Manager, as previously indicated.

Individual staff members receiving a complaint should exercise extreme care in the following areas's in which inappropriate response may intimidate the alleger and/or unnecessarily amplify the complaint.

7.11 Answering Allegers Concerns

Trying to answer the allegers concerns; the alleger may view the prompt answers as an attempt to minimize his concerns and hold back or yield his concerns in a different context.

7.12 Verbalizing Your Concerns

Verbalizing your own concerns about the potential consequences of the allegation, if proven true; the alleger may encompass this speculation into a new allegation of his own.

7.13 Reportable Misadministration

The following guidelines are applicable when medical licensee staff ask if an incident is a reportable misadministration, or if an inspector discovers a set of circumstances that might be a reportable misadministration, and there are significant questions on the interpretation of reportability among the staff. (Includes events with greater than 30 microcuries I-131 and I-125)

a. In all cases, keep a detailed log to document all telephone inquiries and/or discussions of the incident.

b. Obtain preliminary details describing the incident and potential misadministration and notify the Section Manager.

c. If the incident involves therapy, schedule a reactive inspection with the licensee within two weeks of the misadministration incident.

d. Most potential diagnostic misadministrations will not require an inspection. To obtain an accurate description of the event, a phone discussion with the principals involved in the incident will normally be sufficient.

e. During the inspection or phone discussions, interview the principals involved to develop an accurate time sequence and description of the event. Do not rely entirely on summary information provided by other licensee personnel such as radiation safety officer, administrative department head, or hospital director, if they are not directly involved with the incident.

f. Interviews should include questions on personnel involved with the incident, their training and experience, circumstances surrounding the incident, contributing factors, events leading to discovery, time sequence of actions and consequent decision, immediate and proposed follow-up and corrective actions.

g. Review and obtain copies of pertinent documents such as physician prescription or directive, description of the treatment plan, and changes made to the plan or prescription. Depending on the case, other documents may also provide valuable information, such as equipment calibration and

service records and training records. Attach all pertinent documents to the incident report form.

h. After review by the section manager, place the "Medical Misadministration Follow-up Report" (with all pertinent documentation attached) in the appropriate file folder located in the front of the Division's radioactive material licensee "A" file drawer.

7.14 Specific Information of Allegers Concerns

It is imperative that the inspector obtain specific information about the allegers concerns. Statements that reflect only the inspectors feelings, such as "they are all messed up" or "I don't like the way they run things", should not be expressed by an inspector. Such statements reflect a bias which has no place or purpose in an investigation. When such statements are made by the alleger they should be recorded as a record of such bias. If the alleger makes no specific allegations there is no basis for an investigation.

7.15 Specific Role of Section Manager/Alleger/Staff

If at all possible, the Section Manager should be the focal point of discussions between the Division staff and the alleger.

The Section Manager will evaluate the allegations and determine whether follow-up investigations will be conducted. As the follow-up investigation progresses, other allegations or concerns expressed by the alleger may be dropped from further review as ongoing efforts provide new perspective about the credibility of the alleger.

7.16 Provision of Allegation Summary

A written summary of the allegations should be provided to the alleger shortly after the interview along with a request that the alleger confirm whether the summary captures the scope of his concerns.

When the investigation results and Division or Department enforcement actions have become public, the alleger may be provided copies of the documents that describe the Department's review of the allegation, if so requested. In cases of protracted follow-up, periodic contact with the alleger should be maintained.

7.17 Preparing for a Complaint Investigation

Preparation for a complaint investigation may be very much the same as

preparation for an inspection. If so, preparation procedures for incident investigations may be followed. However, some complaints do not involve a licensee or registrant and thus no file is available for review. If a complaint does not involve a licensee or registrant, possible actions to be taken and equipment needed for the investigation may be suggested by the Section Manager.

7.18 Conducting a Complaint Investigation

Each complaint must be considered on an individual basis. The inspector should make a preliminary assessment of the complaint to determine the equipment needed for the investigation. The investigation will involve the gathering of all pertinent information. This might include interviews, surveys, samples, reviews of past records, and calculations of exposures to individuals.

7.19 Preparing and Submitting a Complaint Investigation Report

At the conclusion of an investigation, a thorough report should be compiled in the same manner and format as for an incident investigation. A copy of the complaint report should be filed and a copy sent to the complainant, if the complainant has so requested.

7.20 Conducting Interviews

The following guidance provide direction that will help maximize the amount of pertinent information obtained during the interview, if followed.

a. Explain the purpose of the interview.

b. Try to put the person being interviewed at ease.

c. The interview should not be conducted as a confrontation between the inspector and the person being interviews.

Know in advance what questions to ask.

e. Prior to the interview, review the subject or subjects to be discussed in order to have as much information as possible.

f. Show the person being interviewed you are knowledgeable concerning the subject to be discussed.

g. Avoid asking questions that lead the person being interviewed to an answer you want to hear, or a simple yes or no answer.

7.21 Participating Parties at An Interview

a. A second Investigator should accompany the lead inspector during an interview. If the person being interviewed is to be at a place other than his/her place of employment, a second investigator should accompany the lead investigator.

7.22 Third parties may be present

If the individual being interviewed wishes to have a third party present at the interview, it is allowable. However, that person is not to interfere with the interview or to be allowed to ask or answer questions. If the interview is to be performed at the licensee's or registrant's place of business, a representative of management may be present if his presence would not compromise the interview and the person being interviewed does not object. Again, this person should not interfere with the interview. The interview may be conducted at a location other than the licensee's facility.

7.23 Surveys

Surveys are performed to determine the presence of a radiation field and the amount of exposure a person would receive at a specific distance from a source of radiation. The Division has available count rate meters with various probes as well as ionization chamber instruments for inspectors. Many other more specialized instruments are available upon request. For all probes used with the count rate meter, readings are obtained in units of counts per minute. Readings obtained with the ionization chamber instrument are to be in units of milliroentgens per hour.

Prior to release of premises or equipment for unrestricted use, a comprehensive radiation survey shall be performed to establish that radiation and contamination levels are within the limits outlined in DRC Criteria. These surveys are normally performed by the licensee, but may be performed by Division personnel. If this survey is performed by Division representatives, a report shall include a floor plan or other sketch with sufficient detail to identify all the sampling points.

The instruments used for radiation surveys must be sufficiently sensitive to detect 0.24 mrem per hour if there may have been unsealed sources at the facility. Instruments used to measure for fixed contamination must have been calibrated in

such a way that results may be obtained in units of dpm per 100 cm^2 or be sufficiently sensitive to demonstrate the absence of levels listed in Table I, form DRC-14, (Attachment 6). To survey for removable contamination, filter paper wipes are analyzed by Division staff and may be analyzed at the State Health Laboratory before a final determination is made.

7.24 Sampling Procedures

While sampling for contamination, it is important to insure that exposure is kept as low as reasonably achievable and that the sample is not cross-contaminated. It is also important to insure that proper documentation of the sample is maintained at all times. This documentation shall include the date and time, location, type of sample, area sampled, weather conditions, person performing the sampling, and any other information deemed appropriate by the inspector. The need for chain-of-custody records should be considered.

7.25 Sealed Source Leak Tests

For sealed source leak tests, the location and method of obtaining the sample depends on the source's strength and location. After determining the normal background reading for an area free of radioactive material, use a cotton-tipped applicator or filter paper and wipe the surface of the source or the surface of the device upon which one would expect contamination to accumulate. Be sure to wipe any welds, seams or breaks in the surface of the source. Do not touch the source with the hand. Use a pair of tongs or other device to handle the filter paper. Retire to the area where normal background was determined and, using a count rate meter with a NaI scintillation probe, or other appropriate detector, determine whether any detectable contamination is present on the wipe. Package the samples appropriately for analysis.

7.26 Soil, Air, Water & Vegetation Samples

Soil, air, water and vegetation samples must be representative of the general area being sampled. A sample typical of the area and free of contamination must be obtained to serve as a basis for determining concentrations of naturally occurring elements in the soil. This could normally be an area uphill from a spill of liquid and an area upwind from an airborne release of radioactive material. Samples for analysis should be obtained from areas with the highest readings detected with survey instruments. When examining the area for contamination from a spill, observe the normal pathways of water flow and any damp areas in the soil. For

samples of soil contaminated by liquid releases, consideration must be given to the contour of the land surrounding the source of the release in order to choose correct locations for sampling. If the contamination is due to airborne releases, determine wind direction and velocity at time of release as an aid in locating areas to be sampled.

8.00 INCIDENTS REQUIRING PROMPT INVESTIGATION

8.01 Possible Overexposure

The licensee or registrant is required to report excessive exposures to the Division in accordance with the notification requirements set forth in R313-15-1202 "Notification of Incidents" and R313-32-33 "Notifications, Reports and Records of Misadministrations".

Although Utah Radiation Control Rules do not require licensees to notify the Division for all of the following types of incidents, a prompt physical investigation of the possibility of overexposure shall be conducted by Division representatives when any of the following conditions are known to exist:

a. An individual is believed to have received, in a period of 24 hours

(1) A total effective dose equivalent exceeding 5 rems (0.05 Sv); or

(2) An eye dose equivalent exceeding 15 rems (0.15 Sv); or

(3) A shallow-dose equivalent to the skin or extremities, exceeding 50 rems (0.5 Sv); or

b. An industrial radiographer, an assistant radiographer, helper or supervisor received an exposure from a source disconnect, subsequent source recovery, or other episode which results in a pocket dosimeter (0-200 millirem) being discharged beyond its range. Assistant radiographers, helpers, and supervisors should not be involved in source recovery operations in any way that would result in such exposure.

c. A situation which could cause whole body exposures to members of the general public in excess of 100 millirem.

d. The failure of facilities or equipment which could lead to radiation exposure in excess of those listed in 8.01 a.1.

e. A bioassay sample in excess of limits specified in license condition. This is defined as an overexposure and is to be reported to the Division in accordance with the license provision.

f. A prompt physical investigation is not required when the requirements set forth in R313-32-33 "Notifications, Reports and Records of Misadministrations" have been complied with. If a member of the licensee's staff or other interested party requests assistance in determining if a medical misadministration has occurred or an inspector discovers evidence of an unreported misadministration, a prompt physical investigation is then necessary.

8.02 Potential Release or Discharge of Radioactive Materials

A release or discharge of radioactive material is defined as a level of radiation or concentration of radioactive material (not involving overexposure of any individual) in an unrestricted area in excess of applicable limits as set forth in the rules. The licensee or registrant shall report such a release or discharge of radioactive materials to the Division in accordance with notification requirements as set forth in R313-15-1203 "Reports of Exposures, Radiation Levels, and Concentrations of Radioactive Material Exceeding the Constraints or Limits".

A prompt physical investigation of a release or discharge of radioactive material shall be conducted by Division representatives when any of the following conditions exist:

a. Release of radioactive material to an unrestricted area due to an accident, fire, tornado, earthquake, or other means causes or threatens to cause:

1. Release of a quantity of Radioactive Material greater than five times the lowest annual limit on intake specified in Appendix B of 10 CFR Part 20, 1997 ed;

2. Access to the contamination area, by workers of the public, to restricted for more than twenty-four (24); or

3. Medical treatment at a medical facility of an individual with spreadable radioactive contamination on the individual's clothing or body.

b. A transportation accident involving radioactive material occurs where:

1. The radioactive material container or its contents may have been

damaged resulting in leakage of the material or shifting of the shielding material; or

2. The vehicle driver, passenger, or others are seriously injured or killed.

c. The failure of facilities or equipment which could lead to release of radioactive materials to unrestricted areas in excess of those specified in a.1..

8.03. Lost or Stolen Sources of Radiation

When a licensee or registrant does not have possession or control of a licensed or registered source of radiation due to loss or theft, prompt physical investigation of the loss or theft shall be conducted if so directed by the Section Manager. The licensee or registrant must report such theft or loss of any licensed or registered source of radiation in accordance with reporting requirements as set forth in R313-15-1201.

8.04 Other

A physical investigation may be conducted of an incident in which none of the previous criteria are exceeded but where the level of public concern dictates that a prompt investigation be conducted.

8.05 Cases Where Prompt or Delayed Inspections May be Necessary

The following examples summarize many incidents for which an investigation (prompt or delayed) may be necessary.

a. Excessive contamination or radiation levels on radioactive material packages or loss of package effectiveness, [R313-15-906(4)];

b. Theft or loss of radioactive material, [R313-15-1201];

c. Any event for which a report is required by R313-15-1202, "Notification of Incidents"; including any overexposures, excessive radiation levels, or releases of material to unrestricted areas, [R313-15-1203];

d. Any safety related failures of measuring, gauging, or controlling devices reported under R313-21-22(4)(c)(xii);

e. Any pharmaceutical misadministration, whether diagnostic or therapeutic, (R313-32-33);

f. Any transportation accident in which a radioactive material package has

been damaged, 49 CFR Part 171.15 and 171.16];

Any major deficiency in design, construction, operation, or management control, with sufficient safety implications to require remedial action through modification or suspension of a license;

h. Recurring incidents, or incidents with implications for similar facilities, which are of major concern regarding safety; and

i. Events relating to current high visibility issues such as radioactive waste disposal.

9.00 ABNORMAL EVENTS

9.01 Reports of Abnormal Events to Other Agencies

After a completed incident or complaint investigation report has been submitted, along with analyses of any samples which had been taken, the Section Manager will review the documents to determine whether copies should be sent to other state or federal agencies for their information. During this evaluation the inspector should comply with the directions found in SA-300, Reporting Material Events, May 23, 2001.

Any report prepared as a result of notifications required by R313-15-1203 that meet the Abnormal Occurrence Criteria must be sent to the NRC. Copies of reports of incidents involving licensees of the NRC or another Agreement or Licensing State shall be sent to the appropriate agency. DRC Form Event Report, (Attachment 5) is to be utilized by Division staff to summarize radioactive material incident data. A summary or listing of radioactive materials incidents which have been reported to the NRC will be available through the Nuclear Materials Event Database.

Incidents involving high visibility and/or the possibility of unusual publicity need to be reported to NRC by telephone immediately. Examples include incidents involving: radioactive waste; major design, construction or operation deficiencies necessitating immediate remedial action; serious deficiencies in management or procedural controls; recurring incidents or incidents with implications for similar facilities, which imply a major safety concern.

9.02 Notification of Abnormal Events to Section Managers

Incidents involving the following may need to be reported to the Nuclear Regulatory Commission and should therefore be brought to the Section Managers immediate attention:

a. Excessive contamination or radiation levels on radioactive material packages or loss of package effectiveness, R313-15-906;

b.. Theft or loss of radioactive material, R313-15-1201;

c. Any event for which a report is required by R313-15-1203, "Notification of Incidents"; including any overexposures, excessive radiation levels, or releases of material to unrestricted areas, R313-15-1203

d. Any safety related failures of measuring, gauging, or controlling devices reported under R-313-21-22(4)(c)(xii);

e.. Any pharmaceutical misadministration, whether diagnostic or therapeutic, R313-32-33;

f. Any transportation accident in which a radioactive material package has been damaged, 49 CFR Part 171.15 and 171.16;

g. Any major deficiency in design, construction, operation, or management control, with sufficient safety implications to require remedial action through modification or suspension of a license;

Recurring incidents, or incidents with implications for similar facilities, which are of major concern regarding safety; and

Events relating to current high visibility issues such as radioactive waste disposal

.

CLOSEOUT INSPECTIONS AND CLOSEOUT SURVEYS

(Sections 10.00 through 11.99)

10.00 GENERAL OVERVIEW OF CLOSEOUT INSPECTIONS & SURVEYS

These instructions are used in conjunction with form DRC-14, (Attachment 6), which should be filled out by the licensee and returned to the Division at least 30 days prior to the planned date of abandonment and prior to the initiation of a close out inspection or close out survey. These instructions do not apply to facilities unable to meet the requirements of form DRC-14. The ownership of licensed facilities must be transferred to another licensee specifically licensed to posses the licensed radioactive material or the radioactive material must remain on a license possessed by the licensee. Licensed radioactive material must remain licensed unless action by the Utah Radiation Control Board authorizes otherwise. This is not intended to preclude the possibility of such things as razing buildings etc. and transferring the material in question to a duly authorized recipient.

Problems involving the contamination of soil are quite varied in nature and are not covered in this guidance, they must be dealt with on an individual basis. Facilities having the potential for soil contamination will usually have posted a bond to cover the cost of clean-up. The criteria for such clean up should have been, but is not always, included as a license condition.

11.00 INSPECTION REQUIREMENTS - CLOSEOUT INSPECTIONS

11.01 Closeout Review

a. The Division will review each proposed retirement of expired, superseded, or terminated license to determine the necessity of performing a closeout survey. The review will be on a case-by-case basis to determine the scope of the licensee's program and the potential for site contamination. The need or lack of need for a survey or inspection will be determined as follows:

b. Those facilities that meet any of the following criteria do not require a confirmatory survey:

   1. An adequate closeout survey has been conducted by the licensee.

   2. Use has been limited to small quantities of radionuclides with half-lives of 60 days or less.

   3. Use has been limited to sealed sources only (if leak tests have been < 0.005 uCi).

   4. Use has been limited to materials that pose a very low risk to public health and safety.

c. Those facilities that meet any of the following criteria do require a confirmatory survey:

   1. Unsealed radionuclides with half-lives in excess of 60 days have been used and significant residual contamination is possible.

   2. A significant safety issue has occurred (for example an enforcement conference and civil penalties during the course of the license).

   3. Politically sensitive issues are involved, such as cases pending before a hearing board, or other technical issues that have been brought to the attention of the DRC by concerned citizens or elected public officials.

4. An adequate closeout survey has not been conducted by the licensee. (Prior to the initiation of a close out survey or close out inspection by the Division, the licensee should have submitted form DRC-14 for review. The Division will determine the need for a closeout survey upon review of this document.)

11.02 Licensee Obligations Prior to Closeout Inspection

Prior to initiating a closeout inspection, the inspector shall review the documentation submitted by the licensee with form DRC-14 to determine that the licensee has made a reasonable effort to eliminate residual contamination and is ready for a closeout inspection or survey. The inspector should at this time determine if a close out inspection is still necessary. Form DRC-14 contains adequate instruction to the licensee and if these instructions are followed, the inspector should have no difficulty in making these determinations. Form DRC-14 and the instructions are attached to this document for the readers review. (Attachment 6)

11.03. Confirmation of the Disposition of Materials

In addition to the review of form DRC-14, the inspector should confirm by inspection of records (inventory, transfer, disposal, etc.) that licensed material has been transferred to an authorized recipient.

Verify by inspection of the licensee's facility that licensed material and radioactive/contaminated equipment, materials, scrap, etc. are not being used or stored. This should be done following receipt and evaluation of any reports of the facility's status that have been provided to the Division.

11.04 The Conduct of Confirmatory Surveys.

Determine by performing a survey that there is no residual radioactivity greater that the criteria in form DRC-14. This survey should include measurements for both fixed and removable contamination (as appropriate). If the potential for contamination exists outside the facility, environmental samples should be taken. (See NUREG CR-2082 Section 3.3 for Specific Survey Procedures and Section 4 regarding instrumentation needed and sampling procedures) This survey should include the following:

a. Buildings, rooms, furniture, systems and equipment; ventilation ducts, filters, sinks, drains, traps and sumps; overhead fixtures, walls and floors, etc., should all be considered as areas to be surveyed. The number of the

confirming measurements made by the inspector will vary with the magnitude of the potential for contamination and the thoroughness of the licensee's survey.

b. The number and type of samples collected for analysis will depend on the determination that a potential exists for facility and environmental contamination and on other findings; i.e., the material involved, extent of area affected, nature of media involved, etc., and in the inspector's professional judgement.

c. "As appropriate" is determined on the basis of the potential for environmental contamination and in the inspectors professional judgment.

d. Radiation levels should be below those listed in form DRC-14, which should be used by the licensee during decontamination and or decommissioning. If levels exceed those listed, the licensee should demonstrate that reasonable efforts to decontaminate the facility do not result in an appreciable reduction in the radiation levels. If the radiation levels are greater than the accepted levels and the licensee had made a reasonable effort to decontaminate the facility, the Executive Secretary should be consulted in determining an acceptable radiation level for release of the facility.

11.05 Review of Reports and Records.

Verify by reviewing records and files that:

a.. Reports of personnel exposures for terminated employees or employees no longer working with radioactive materials required by R313-18-13 have been submitted to the employee.

b. Plans or arrangements have or have not been made for preserving records required by R313-15-1102 through 1110. Although certain licensees are not required to report personnel exposures, and the limitations of a license removes the legal obligation to maintain the records required by R313-15-1102 through 1110, the licensee should be informed that retention of these records is highly recommended.

11.06. Assessment of the Burial of Waste.

Determine if waste has been buried on the site. If burial has occurred, do the following:

a. Obtain information on the type and quantity of the materials buried. Also identify the following: radionuclides, type of packaging, specific location of burial, depth and spacing used for burial. Obtain information on the planned use of the area after the license is terminated.

b. Conduct a surface survey to determine the radiation levels at the burial site.

c. Submit the information acquired under a. and b. (above) to the Section Manager for assistance in determining the final action.

d. Radiation levels and geographical coordinates or other specific means of identification should be recorded on a map, diagram, photo, or other similar document. Information is required to determine whether long-term control of the area will be required.

11.07 Closeout Inspection Report

Prepare a final inspection report which summarizes the actions taken under this inspection procedure and the findings and evaluations for review by DRC staff and approval by the Executive Secretary. This report becomes the official certification of the disposal of licensed material and forms the basis for retiring and eventually disposing of both the licensing and inspection files.

FOLLOW-UP INSPECTIONS
(Section 12.00 through 13.99)

12.00 GENERAL OVERVIEW - FOLLOW UP INSPECTIONS

Follow-up inspections may be performed as a part of a routine inspection. If escalated enforcement action has taken place for a particular licensee, a follow-up inspection should be scheduled within six (6) months of the last inspection. The inspection should occur after

completion of the escalated enforcement action. The objective of this inspection is to assess the licensee's follow-up actions in response to the previous violations.

This document outlines the means by which an inspector should ascertain that the licensee's response for items of noncompliance identified in a Notice of Violation (NOV) is in conformance with regulatory requirements, that the corrective measures were completed including the identification of root causes and addressing of general implications, and that the program procedures and practices have been appropriately strengthened to prevent recurrence. The determination of root causes of deficient management controls and their potential generic implications is the most important item in this inspection procedure.

13.00 FOLLOW-UP INSPECTION - REQUIREMENTS

13.01 Follow-up Inspection

Verify by a record review, observation, and discussions with licensee personnel the following information relating to follow-up on items of noncompliance:

a. That the licensee responded in a timely manner.

b. That the measures taken to correct the item and avoid further items of noncompliance were effected as described and within the time period specified in the reply. When repetitive items of noncompliance recur, the licensee should be requested to conduct an in depth analysis of the management control system to assure that all deficient management controls were corrected rather than just correcting the controls that were associated with the specific item. This entails the determination of root causes and potential generic implications.

c. That other licensee commitments discussed in the reply were also completed.

13.02 Identified Noncompliance Items

The following inspection requirements need not be completed for each noncompliance item, but may help to verify proper functioning of the licensee's administrative controls:

a. That licensee management forwarded copies of reply to appropriate personnel within the licensee's organization.

b. That responsibility has been assigned for effecting the described corrective action including effecting the identified changes in procedures and practices.

c. That the item(s) of noncompliance and identified corrective measures were

reviewed as required by approved administrative procedures.

d. That the licensee posted copies of enforcement correspondence as required by R313-18-11 (required only for noncompliance items related to radiological working conditions).

e. That the licensee conducted audits of the inspection area in which violations were identified, noted deficiencies, and effective follow-up actions were initiated.

As part of a follow up inspection it might be necessary to evaluate the licensee and procedures that they have in place to correct problems and identify potential areas of non-compliance. (Sections 14.00 through 15.99 addresses this inspection activity).

ASSESSMENT OF LICENSEE PERFORMANCE
(Section 14.00 through 15.99)

14.00 GENERAL OVERVIEW

This document outlines the procedures to evaluate the effectiveness of licensee controls in identifying, resolving, and preventing issues that degrade the quality of operations or safety. Procedures are used to evaluate performance information from the previous 12-24 months.

15.00 INSPECTION REQUIREMENTS

15.01 Inspection Preparation

a. Review the strengths and weaknesses of licensee controls.

b. Review the results of licensee self-assessments, placing special emphasis on the conclusions and corrective actions.

c. Review performance reviews, enforcement history, performance indicators, and licensee operating activities, to determine any current areas of strengths or weaknesses.

NOTE: Use of Performance Evaluation Factors (PEF'S) Form dated 4/98 may be used by the inspector to assist in performing the inspection. Attachment 9.

15.02 Licensees Resolution of Problems

a. Select a sample of issues or problems from the list below for detailed analysis to assess the licensee's ability to identify and correct problems.

   1. Operational events, testing, or maintenance activities (such as temporary repairs or troubleshooting activities).

   2. Deficiencies or modifications requiring safety evaluations or operability determinations.

   3. Procedural adherence deficiencies and procedure change backlog.

   4. QA audits and self-assessments.

   5. Repetitive equipment deficiencies.

   6. Other events or issues that may indicate weaknesses.

b. Analyze in detail the problems selected above to determine the licensee's effectiveness in performing the following:

   Initial identification and characterization of the problem.

   2. Elevation of problems to proper level of management for resolution (internal communications and procedures).

   3. Root-cause analysis.

   4. Disposition of any operability/reportability issues.

   5. Implementation of corrective actions including evaluation of repetitive conditions.

   6. Expansion of the scope of corrective actions to include applicable related systems, equipment, procedures, and personnel actions.

c. Identify any strengths and determine the root causes of any weaknesses or slow response identified during the detailed analysis above. Possible root causes might include understaffing, lack of training, lack of funding, lack of accountability, unclear responsibility, procedure inadequacy, undue schedule pressure, or inaccuracy in design-basis documents.

15.03 Corrective Action Programs

a. Review the deficiencies tracked in the licensee's corrective action programs, including the evaluation of deferred items, or interim resolutions.

b. Review the results of licensee audits that evaluated the effectiveness of the associated corrective action programs.

c. Interview selected individuals involved with the licensee's problem identification process to determine the extent of the individual's understanding of the process and willingness to report problems.

d. Evaluate the licensee's corrective action programs to verify that the licensee is appropriately identifying significant issues and implementing timely corrective actions which achieve lasting results. Determine the adequacy of root-cause analyses.

15.04 Operating Experience Feedback

a. Evaluate the adequacy of the licensee's programs that implement operational experience feedback. Focus on the licensee's effectiveness to assess, to inform appropriate personnel of the results, and to initiate corrective actions for information obtained both within and outside the licensee's organization. Consider operational experience information reports as sources of information:

b. Identify any strengths or contributing conditions which reflect a lack of responsiveness in licensee programs that implement operational experience feedback.

15.05 Self-Assessment Activities

Evaluate the effectiveness of the licensee's self-assessment capability by reviewing self-assessment reports, audits, and evaluations.

Evaluate the significance of self-assessment findings to determine the effectiveness of the self-assessment effort. If relatively few significant findings are identified, review the scope of the self-assessment and the qualification of the licensee's staff involved in the self assessment. Determine if the self-assessment findings are consistent with previous inspection findings, plant performance, and third-party audits.

b. Determine if the licensee is aggressive in following up on self-assessment findings and determine whether the licensee's corrective actions are adequate, timely, and properly prioritized. Determine if individuals at all

levels in the self-assessment and corrective action process are held sufficiently accountable to ensure that corrective actions are technically adequate and timely. Determine if the licensee has a meaningful trending program with sufficient information available for identifying recurring problems.

c. Interview selected individuals involved with the oversight function, to gain their insight on the effectiveness of their effort and the responsiveness of management and staff to issues raised.

ATTACHMENT

1

RADIOACTIVE MATERIAL LICENSE INSPECTION PROGRAM

NRC PROGRAM CODE	LIC. CAT. NO.	LICENSE CATEGORY TITLE	CUR. INSPEC. FREQ.(I)	CUR. PRIOR. & INSPEC. FREQ (R)	CHANGE IN PRIOR.	NRC PRIOR.	UTAH LIC. NO.
22120 (SNM Pu -Sealed Neutron Source <200g) 22140 (SNM Pu - Sealed Sources in Devices)	1-a	SNM - Sealed Sources in Devices	6 month	III		5 5	1
22110 (SNM Pu - Unsealed < Critical Mass) 22111 (SNM U-235 and/or U-233 - Unsealed < Critical Mass)	1-b	SNM <15 grams for Research and Development	6 month	II		2 2	
22150 (SNM Pu - Sealed Sources < Critical Mass) 22151 SNM U-235 and/or U-233 - Sealed Sources < Critical Mass)	1-c	SNM - All Others	6 month	III		5 5	
No NRC Equivalent	1-d	SNM - Calibration & Reference Sources	6 month	III		N/A	

NRC PROGRAM CODE	LIC. CAT. NO.	LICENSE CATEGORY TITLE	CUR. INSPEC. FREQ.(I)	CUR. PRIOR. & INSPEC. FREQ (R)	CHANGE IN PRIOR.	NRC PRIOR.	UTAH LIC. NO.
11300 (Source Material - Other > 150 kg, includes munition production, subcritical assembly, and other)	2-a	Source Material	6 month	II		3	
11210 (Source Material - Shielding)	2-b	Shielding	6 month	V		7	
11200 (Source Material - Other < 150 kg) 11700 (Rare-Earth - extraction and processing)	2-c	Source Material - Other (< 150 kg)	6 month	III		5 3	1

NRC PROGRAM CODE	LIC. CAT. NO.	LICENSE CATEGORY TITLE	CUR. INSPEC. FREQ.(I)	CUR. PRIOR. & INSPEC. FREQ (R)	CHANGE IN PRIOR.	NRC PRIOR.	UTAH LIC. NO.
03211 (Manufacturing & Distribution - Type A Broad)	3-ai.1	Manufacturing for Commercial Distribution (Type A Broad)	6 month	I		1	
03212 (Manufacturing & Distribution - Type B Broad)	3-ai.2	Manufacturing for Commercial Distribution (Type B Broad)	6 month	II		3	
03213 (Manufacturing & Distribution - Type C Broad)	3-ai.3	Manufacturing for Commercial Distribution (Type C Broad)	6 month	III		5	
03214 (Manufacturing & Distribution - Other)	3-aii	Manufacturing for Commercial Distribution (Other)	6 month	I		3	1
02500 (Nuclear Pharmacies)	3-b.1	Nuclear Pharmacies	6 month	I		1	2

NRC PROGRAM CODE	LIC. CAT. NO.	LICENSE CATEGORY TITLE	CUR. INSPEC. FREQ.(I)	CUR. PRIOR. & INSPEC. FREQ (R)	CHANGE IN PRIOR.	NRC PRIOR.	UTAH LIC. NO.
02511 (Medical Product Distribution - 32.72, prepared radio-pharmaceuticals)	3-b.2	Processing, Manufacturing, and Distribution (Prepared Radiopharmaceuticals)	6 month	II		3	
02513 (Medical Product Distribution - 32.74, Sources and Devices, therapy sources, calibration and reference sources)	3-b.3	Processing, Manufacturing, and Distribution (Sources and Devices)	6 month	II		3	
No NRC Equivalent	3-c	Distribution or Redistribution of Radiopharmaceuticals (See R313-70)		II			1
03310 (Industrial Radiography - Fixed)	3-d.1	Industrial Radiography (Fixed)	6 month	I		1	4
03320 (Industrial Radiography - Temporary Jobsites)	3-d.2	Industrial Radiography (Temporary Jobsites)	6 month	I		1	3

NRC PROGRAM CODE	LIC. CAT. NO.	LICENSE CATEGORY TITLE	CUR. INSPEC. FREQ.(I)	CUR. PRIOR. & INSPEC. FREQ (R)	CHANGE IN PRIOR.	NRC PRIOR.	UTAH LIC. NO.
No NRC Equivalent	3-d.3	Industrial Radiography (Both Fixed and Temporary Jobsites)	6 month	I			4
03510 (Irradiators - Self-Shielded, <10,000 Ci, includes blood irradiators) 03520 (Irradiators - Self-Shielded, >10,000 Ci)	3-e	Irradiators (Self-Shielded)	6 month	III		5 3	2
03511 (Irradiators Other < 10,000 Ci - panoramic, includes converted teletherapy units)	3-fi	Irradiators (< 10,000 Ci Exposed)	6 month	I		3	
03521 (Irradiators - Other >10,000 Ci)	3-fii	Irradiators (> 10,000 Ci Exposed)	Prelicense & 6 month	I		1	1

NRC PROGRAM CODE	LIC. CAT. NO.	LICENSE CATEGORY TITLE	CUR. INSPEC. FREQ.(I)	CUR. PRIOR. & INSPEC. FREQ (R)	CHANGE IN PRIOR.	NRC PRIOR.	UTAH LIC. NO.
03254 (Exempt Distribution - 32.22, self-luminous products) 03255 (Exempt Distribution - 32.26, smoke detectors)	3-g	Distribution to Exempt (items or quantities that require device evaluation)	6 month	III		5 5	

NRC PROGRAM CODE	LIC. CAT. NO.	LICENSE CATEGORY TITLE	CUR. INSPEC. FREQ.(I)	CUR. PRIOR. & INSPEC. FREQ (R)	CHANGE IN PRIOR.	NRC PRIOR.	UTAH LIC. NO.
03250 (Exempt Distribution - 32.11, exempt concentrations; includes broad)	3-h	Distribution to Exempt (items or quantities that require no device evaluation)	6 month	III		5	
03251 (Exempt Distribution - 32.14; H-3, Pm-147, and other isotopes in 10 CFR 30.15)						5	
03252 (Exempt Distribution, Resins - 32.17; Sc-46 resins)						5	
03253 (Exempt Distribution - 32.18 Small Quantities, byproduct material in processed chemicals, elements, compounds, mixtures, tissue samples, etc.)						5	

NRC PROGRAM CODE	LIC. CAT. NO.	LICENSE CATEGORY TITLE	CUR. INSPEC. FREQ.(I)	CUR. PRIOR. & INSPEC. FREQ (R)	CHANGE IN PRIOR.	NRC PRIOR.	UTAH LIC. NO.
03240 (General License Distribution - 32.51, generally licensed gauges, other)	3-i	Distribution to General Licensee (items or quantities that require device evaluation)	6 month	III		5	
03241 (General License Distribution - 32.53, H-3, Pm-147 signs or markers)						5	
03242 (General License Distribution - 32.57, Am-241 calibration sources)						5	
03243 (General License Distribution - 32.61, Sr-90 ice detection)						5	
11230 (Source Material - General License Distribution - 10 CFR 40.34)						5	

NRC PROGRAM CODE	LIC. CAT. NO.	LICENSE CATEGORY TITLE	CUR. INSPEC. FREQ.(I)	CUR. PRIOR. & INSPEC. FREQ (R)	CHANGE IN PRIOR.	NRC PRIOR.	UTAH LIC. NO.
03244 (General License Distribution - 32.71, In-Vitro Kits)	3-j	Distribution to General License (items or quantities that require no device evaluation)	6 month	III		5	
03620 (Research and Development - Other)	3-k.0	Research and Development - Other	6 month	II		5	9
03610 (Research and Development - Type A Broad, committee-approved users)	3-k.1	Research and Development - Type A Broad	6 month	II		2	
03611 (Research and Development - Type B Broad, RSO-approved users)	3-k.2	Research and Development - Type B Broad	6 month	II		3	

NRC PROGRAM CODE	LIC. CAT. NO.	LICENSE CATEGORY TITLE	CUR. INSPEC. FREQ.(I)	CUR. PRIOR. & INSPEC. FREQ (R)	CHANGE IN PRIOR.	NRC PRIOR.	UTAH LIC. NO.
03612 (Research and Development - Type C Broad, named users)	3-k.3	Research and Development - Type C Broad	6 month	II		5	
03613 (Research and Development - Broad, multisite-multiregional)	3-k.4	Research & Development, Broad (multisite)	6 month	II		1	
03124 (Measuring Systems - Other)	3-l.0	All Others	6 month	III		7	2
03121 (Measuring Systems - Portable Gauges, including Industrial Lixiscope)	3-l.1	Portable Gauges	6 month	III		5	91
03120 (Measuring Systems - Fixed Gauges)	3-l.2	Fixed Gauges	6 month	IV		5	19
03122 (Measuring Systems - Analytical Instruments)	3-l.3	Analytical Instruments	6 month	IV		7	10

NRC PROGRAM CODE	LIC. CAT. NO.	LICENSE CATEGORY TITLE	CUR. INSPEC. FREQ.(I)	CUR. PRIOR. & INSPEC. FREQ (R)	CHANGE IN PRIOR.	NRC PRIOR.	UTAH LIC. NO.
03123 (Measuring Systems - Gas Chromatographs)	3-l.4	Gas Chromatographs	6 month	V		7	2
02410 (In-Vitro Testing Laboratories)	3-l.5	In-Vitro Testing Laboratories	6 month	IV		5	3
02400 (Veterinary Nonhuman)	3-l.6	Veterinary Nonhuman	6 month	III		5	
No NRC Equivalent	3-l.7	Source Storage	6 month	III			3
No NRC Equivalent	3-l.8	Redistribution	6 month	III			2
No NRC Equivalent	3-l.9	Radiological Assay	6 month	II			4
01100 (Academic Type A Broad, Committee-approved users)	3-m.1	Academic Type A Broad	6 month	II		2	1
01110 (Academic Type B Broad, RSO-approved users)	3-m.2	Academic Type B Broad	6 month	II		3	1
01120 (Academic Type C Broad, named users)	3-m.3	Academic Type C Broad	6 month	III		5	1

NRC PROGRAM CODE	LIC. CAT. NO.	LICENSE CATEGORY TITLE	CUR. INSPEC. FREQ.(I)	CUR. PRIOR. & INSPEC. FREQ (R)	CHANGE IN PRIOR.	NRC PRIOR.	UTAH LIC. NO.
No NRC Equivalent	3-m.4	Academic/Medical Broad Scope	6 month	I			1
03225 (Other Services, includes teletherapy, irradiator, and gauge services)	3-n.1	Service Licenses (Gauge)	6 month	III		3	
03221 (Instrument Calibration Services Only, Self-Shielded) 03222 (Instrument Calibration Services Only - Other)	3-n.2	Instrument Calibration (<100 Ci)	6 month	IV		5 3	1
No NRC Equivalent	3-n.3	Instrument Calibration (>100 Ci) and Leak Testing	6 month	III			1
03219 (Decontamination Services)	3-n.4	Decontamination/ Decommissioning	6 month	II		2	3
03220 (Leak Test Services Only)	3-o	Leak Testing Only	6 month	V		7	

NRC PROGRAM CODE	LIC. CAT. NO.	LICENSE CATEGORY TITLE	CUR. INSPEC. FREQ.(I)	CUR. PRIOR. & INSPEC. FREQ (R)	CHANGE IN PRIOR.	NRC PRIOR.	UTAH LIC. NO.
03231 (Waste Disposal - Burial)	4-a	Waste Disposal	6 month	I		1	1
03234 (Waste Disposal Service - Processing and/or Repackaging)	4-b	Repackaging Waste	6 month	I		1	1
03232 (Waste Disposal Service - Prepackaged Only)	4-c	Receipt of Prepackaged Waste	6 month	II		2	
No NRC Equivalent	4-d	On Site Radioactive Waste Packaging	6 month	III			
03110 (Well Logging - Byproduct and/or SNM, Tracer and Sealed Sources) 03111 (Well Logging - Byproduct and/or SNM, Sealed Sources Only) 03112 (Well Logging- Byproduct Only, Tracers Only)	5-a	Well Logging (No Field Flood)	6 month	II		3 3 3	7

NRC PROGRAM CODE	LIC. CAT. NO.	LICENSE CATEGORY TITLE	CUR. INSPEC. FREQ.(I)	CUR. PRIOR. & INSPEC. FREQ (R)	CHANGE IN PRIOR.	NRC PRIOR.	UTAH LIC. NO.
03113 (Field Flooding Studies)	5-b	Well Logging (Field Flood)	6 month	II		3	
03218 (Nuclear Laundry)	6-a	Nuclear Laundry	6 month	II		2	
02300 (Teletherapy - human use only)	7-a	Teletherapy	6 month	I		3	
02120 (Medical Institution, Hospitals, Clinics - QMP required) 02121 (Medical Institution - no QMP required)	7-b.1	Medical Institution Limited	6 month	III		3 5	27
02200 (Medical Private Practice - QMP required) 02201 (Medical Private Practice - no QMP required) Broad)	7-b.2	Medical Private Practice	6 month	III		3 5	1

NRC PROGRAM CODE	LIC. CAT. NO.	LICENSE CATEGORY TITLE	CUR. INSPEC. FREQ.(I)	CUR. PRIOR. & INSPEC. FREQ (R)	CHANGE IN PRIOR.	NRC PRIOR.	UTAH LIC. NO.
02210 (Eye Applicators Strontium-90, hospitals or physicians' offices)	7-b.3	Strontium-90 Eye Applicator	6 month	IV		3	
22160 (Pacemaker Byproduct, and/or SNM - Medical Institution 22161 (Pacemaker Byproduct, and/or SNM - Individual)	7-b.4	Medical (Pacemaker)	6 month	IV		7 7	1
02220 (Mobile Nuclear Medicine Service)	7-b.5	Medical (Mobile)	6 month	II		2	
02110 (Medical Institution Broad, hospitals only)	7-c	Medical Institution Broad	6 month	I		1	1

NRC PROGRAM CODE	LIC. CAT. NO.	LICENSE CATEGORY TITLE	CUR. INSPEC. FREQ.(I)	CUR. PRIOR. & INSPEC. FREQ (R)	CHANGE IN PRIOR.	NRC PRIOR.	UTAH LIC. NO.
03710 (Civil Defense)	8-a	Civil Defense	6 month	IV		5	1
22130 (Power Sources with Byproduct and/or SNM	10-a	Power Source	6 month	III		7	

ATTACHMENT 2

TELEPHONE

EVALUATION OF POSSESSION AND USE OF RADIOACTIVE MATERIAL

(For use with inspection category IV and V Licenses only)

Attachment 2
Instructions

IV and V Licenses Telephone Contact Procedures for Inspection Category

In the event a backlog of scheduled inspections has occurred, or it appears a backlog will occur, the inspector has the option, with the Section Managers approval, of exempting inspection category IV and V licenses from routine inspection by the DRC.

Information regarding radioactive material registration under a General License may also be obtained in a similar manner.

1. Select licensee to interview from the computer listing of licenses needing inspections. Select only licensees that have had initial inspections.

2. Pull the license/or registration file and review the file to determine the person to contact for information needed to complete interview questionnaire (Enclosure 2).

3. Telephone licensee/registrant and complete questionnaire (see following page). Note that not all licenses require each procedure mentioned in the questionnaire.

4. If the licensee reports any problems, namely:

   a. personnel exposures in excess of 1.25 rems for a calendar quarter
   b. lost licensed material
   c. leak tests indicating source leakage or
   d. any event the licensee/registrant considered unusual

   The person filling in the questionnaire should promptly notify the Section Manager. Provide the Section Manager with the appropriate draft letter, (Attachment 3).

5. If the licensee responses confirm no problems are present, prepare the appropriate draft transmittal letter (Attachment 4).

6. Send appropriate letter to Licensee/registrant after it has been reviewed by a member of the appropriate section.

ATTACHMENT 2
FORM

TELEPHONE

EVALUATION OF POSSESSION AND USE OF RADIOACTIVE MATERIAL

(For use with inspection category IV and V Licenses only)

Name: _____License Number _____
Address: _____Phone Number: _____
_____
_____

Name and Title of person responsible for radiation safety program: _____
_____

Describe how this material is used: _____
_____
_____

Described how you safeguard the byproduct material from use by unauthorized personnel:
_____
_____

Describe how you safeguard the material from loss or theft: _____
_____
_____

Describe controls which prevent individuals who work in the area around the material becoming exposed to radiation: _____
_____
_____

Do you have a personal monitoring program for your employees such as film badges, dosimeters:
Yes ___ No ___

If yes, were there any exposures to individuals in excess of 1.25 rems for any calendar quarter for the year(s) _____?

Yes _____ No _____

Do you perform surveys to detect external radiation in the area around the radioactive material?
Yes___ No ___

If yes, how often are the surveys performed? _____

_____

What instruments is used to perform the surveys? _____

_____

When was this instrument last calibrated? _____

On what date was the last physical inventory of all radioactive material in your possession performed? _____

Do you perform leak tests on the sealed source? Yes ___ No ___

If yes, how often are these leak tests performed? _____

Who evaluates the leak test results? _____

If no, describe the provisions you have made to have the leak tests done:

_____

_____

Describe your provisions for repair and maintenance of your device or source holder: _____

_____

_____

Describe any unusual events involving the radioactive material, radiation machines or devices. ___

_____

_____

_____

Name of person filling in questionnaire: _____

Title: _____

Date: _____

ATTACHMENT

3

Follow-up Letter for Telephone Contact #1

ATTACHMENT 3

Follow-up Letter for Telephone Contact #1

License No. _____

_____
_____
_____
_____

Gentlemen:

This refers to a telephone contact conducted on _____ , 19 _.

The contact was an examination of activities conducted under your license registration as they relate to radiation safety and to compliance of the Utah State Radiation Control rules and with the conditions of your license registration. The contact consisted of discussions with _____ _____.

As a result of this examination of activities, the following concerns were noted and are specified below. These may be evaluated at an on site inspection at your facility in the near future.

As you described on the telephone, the following apparent regulatory concerns were identified.

(examples)

1. failure to leak test sealed sources at the required intervals

2. an exposure of _____ rems to an individual during the third quarter of _____*

3. an apparently lost gauge containing _____ curies of _____*

*(If apparently serious enough [such as overexposure], add the following)

You should examine your license and Utah State Radiation Control Rules to determine how you can correct the apparent regulatory concerns that you discussed on the telephone. In addition, we would like to highlight the following items that licensees should pay particular attention to as follows:

a. maintaining awareness and control of licensed material

Facility Name

b. proper transfers and disposal of radioactive sources

c. promptly reporting losses or thefts of licensed materials

If you have any questions regarding this contact, you may contact us at _____ _____.

Sincerely,

ATTACHMENT

4

FOLLOW UP LETTER FOR TELEPHONE CONTACT #2

ATTACHMENT 4

FOLLOW UP LETTER FOR TELEPHONE CONTACT #2

License No. _____

_____
_____
_____
_____

Gentlemen:

This refers to a telephone contact conducted on _____ , 19 _.

The contact was an examination of activities conducted under your license registration as they relate to radiation safety and to compliance of the rules and with the conditions of your license registration. The contact consisted of discussions with _____.

No regulatory concerns were identified.

If you have any questions regarding this contact, you may contact us at 536-4250

Sincerely,

ATTACHMENT

5

DRC INCIDENT REPORT

Attachment 5
DRC-INCIDENT

UTAH STATE
DEPARTMENT OF ENVIRONMENTAL QUALITY
DIVISION OF RADIATION CONTROL
INCIDENT REPORT

DATE: _____

INCIDENT NO: UT_____

LICENSEE: _____ LICENSE NO: _____

CITY: _____ CONTACT: _____

EVENT INVOLVED:

[ ] Loss of package effectiveness or contamination
[ ] Theft or loss of RAM
[ ] Overexposure of individual
[ ] Excessive levels of radiation or
[ ] Therapeutic concentrations of RAM
[ ] Transportation
[ ] Device safety failure
[ ] Possible generic [ ] GL
[ ] Leaking source
[ ] Misadministration
[ ] Diagnostic
[ ] Uranium mill occurrence
[ ] Other _____

DATE OF EVENT: _____ DATE REPORTED TO DIVISION _____

BRIEF DESCRIPTION OF EVENT:

_____
_____
_____

ISOTOPE: _____ AMOUNT: _____

OTHER UTAH OR OUT-OF-STATE LICENSEES INVOLVED:

LICENSEE: _____ LICENSE NO: _____
JURISDICTION: _____ RECIPROCITY LICENSEE? Y/N _____
CORRECTIVE ACTIONS TAKEN BY LICENSEE:

Corrective Actions (Continued)

_____
_____
_____

EVENT REPORTED BY PHONE or IMMEDIATE CORRESPONDENCE WITH:

[ ] *NRC WHO? _____ DATE: _____ BY: _____

[ ] LAW ENFORCEMENT: WHO? _____ DATE: _____ BY: _____

[ ] OTHER AGREEMENT STATES: WHO? _____ DATE: _____ BY: _____

[ ] OTHER LICENSES WHO? _____ DATE: _____ BY: _____

[ ] MEDIA: WHO? _____ DATE: _____ BY: _____

OTHER ACTIONS TAKEN:

_____
_____
_____
_____

CLOSEOUT SUMMARY:

DATE CLOSED: _____ REPORTED CLOSED BY _____

SUMMARY OF CLOSEOUT:

_____
_____
_____
_____
_____

*Only incidents involving high visibility and/or the possibility of unusual publicity need to be reported to NRC immediately. Examples include incidents involving: Radioactive Waste; Major design, construction or operation deficiencies necessitating immediate remedial action; Serious deficiencies in management or procedural controls; Recurring incidents which imply a major safety concern.

ATTACHMENT

6

DRC-FORM 14

(6)

UTAH DIVISION OF RADIATION CONTROL
CERTIFICATE - TERMINATION AND DISPOSITION OF RADIOACTIVE MATERIAL

INSTRUCTIONS:

Submit this form to: Utah Division of Radiation Control, Department of Environmental Quality, P.O. Box 144850, Salt Lake City, Utah 84114-4850. Please place an X or N/A (Not applicable) in the space preceding each number.

LICENSEE	3. License Number
1. Name	
2. Address	4. Expiration Date

CERTIFICATE

_____ 1. All use of radioactive materials authorized under the above-referenced license has been terminated.

_____ 2. Any radioactive contamination resulting from use of materials possessed under the authorization granted by the above-referenced license has been accounted for as follows (choose applicable answer):

_____ a. No possibility of contamination exists. A survey does not need to be performed to determine the presence of contamination. A brief explanation justifying this conclusion is attached.

_____ b. Radioactive contamination has been removed to the extent practicable. Attached are the reports and information specified in R313-22-36(4)(a)(iv) and (v).

_____ 3. All sealed sources containing licensed material, possessed under the above-referenced license, other than Hydrogen-3, with a half-life greater than 30 days and in a form other than gas were tested for contamination and/or leakage within six months prior to transfer and were transferred to an individual specifically licensed to possess them.

_____ 4. All radioactive material previously procured and/or possessed under the authorization granted by the above-referenced license has been disposed of as follows:

_____ a. Transferred in accordance with R313-19-41 to (Name and Address)

_____

which is authorized to possess such material under License Number _____

Issued by (Licensing Agency): _____

UTAH DIVISION OF RADIATION CONTROL
CERTIFICATE - TERMINATION AND
DISPOSITION OF RADIOACTIVE MATERIAL

_____ b. Decayed, surveyed, and disposed of as non-radioactive trash.

_____ c. Other (attach additional pages).

_____ 5. No radioactive material has ever been procured and/or possessed by the licensee under the authorization granted by the above-referenced license.

_____ 6. Additional remarks (attached additional pages).

The undersigned, on behalf of the licensee, hereby certifies that licensed quantities of radioactive material under the jurisdiction of the Division of Radiation Control are not possessed by the licensee. It is requested that the above-referenced license be terminated.

DATE: _____ SIGNATURE: _____

TITLE: _____

INSTRUCTIONS
FOR
RADIATION SURVEY REPORT

Prior to the release of facilities and equipment for uncontrolled use, the licensee shall submit a radiation survey report to confirm the absence of radioactive material or to establish the levels of residual radioactive contamination, unless the licensee demonstrates the absence of residual radioactive contamination in some other acceptable manner. (Refer to Table 1, Acceptable Surface Contamination Levels for Uncontrolled Release of Facilities and Equipment.)

In accordance with R313-22-36(4)(a)(v)(A) and (B) and R313-22-36(4)(c)(ii), please provide the following information, as appropriate:

1. Report levels of radiation in units of microrads per hour of beta and gamma radiation at one centimeter and gamma radiation at one meter from surfaces; and report levels of radioactivity, including alpha, in units of disintegrations per minute, or microcuries, per 100 square centimeters removable and fixed on surfaces; microcuries per milliliter in water; and picocuries per gram in contaminated solids such as soils or concrete.

   Regulatory guidance concerning radiation levels in water and in contaminated solids, such as soils or concrete, is available from the Division of Radiation Control.

2. Specify the instrumentation used and certify that each instrument was properly calibrated and tested.

3. Submit a plan for decontamination, if required, in regards to remaining radioactive contamination.

   Regulatory guidance is available from the Division of Radiation Control to assist a licensee in the preparation of a plan for decontamination of facilities or equipment.

UTAH DIVISION OF RADIATION CONTROL
CERTIFICATE - TERMINATION AND DISPOSITION OF RADIOACTIVE MATERIAL

TABLE 1

Acceptable Surface Contamination Levels for Uncontrolled Release of Facilities and Equipment*

Nuclide[a]	Average [b,c,f]	Maximum [b,d,f]	Removable [b,e,f]
U-Nat, U-235, U-238 and associated decay products	5,000 dpm alpha/100 cm^2	15,000 dpm alpha/100 cm^2	1,000 dpm alpha/100 cm^2
Transuranics, Ra-226, Ra-228, Th-230, Th-228, Pa-231, Ac-227, I-125, I-129	100 dpm/100 cm^2	300 dpm/100 cm^2	20 dpm/100 cm^2
Th-nat, Th-232, Sr-90, Ra-223, Ra-224, U-232, I-126, I-131, I-133	1,000 dpm/100 cm^2	3,000 dpm/100 cm^2	200 dpm/100 cm^2
Beta-gamma emitters (nuclides with decay modes other than alpha emission or spontaneous fission) except Sr-90 and others noted above	5,000 dpm beta-gamma/100 cm^2	15,000 dpm beta-gamma/100 cm^2	1,000 dpm beta-gamma/100 cm^2

[a] Where surface contamination by both alpha- and beta-gamma emitting nuclides exists, the limits established for alpha- and beta-gamma emitting nuclides should apply independently.

[b] As used in this table, dpm (disintegrations per minute) means the rate of emission by radioactive material determined by correcting the counts per minute observed by an appropriate detector for background, efficiency, and geometric factors associated with the instrumentation.

[c] Measurements of average contaminant should not be averaged over more than one square meter. For objects of less surface area, the average should be derived from each such object.

[d] The maximum contamination level applies to an area of not more than 100 cm^2.

[e] The amount of removable radioactive material per 100 cm^2 of surface area should be determined by wiping the area with a dry filter or soft absorbent paper, applying moderate pressure, and assessing the amount of radioactive material on the wipe with appropriate instrument of known efficiency. When removable contamination on objects of less surface area is determined, the pertinent levels should be reduced proportionally and the entire surface should be wiped.

[f] The average and maximum radiation levels associated with surface contamination resulting from beta-gamma emitters should not exceed 0.2 mrad/hr at 1 cm and 1.0 mrad/hr at 1 cm, respectively, measured through not more than 7 milligrams per square centimeter of total absorber.

* Contamination on equipment or surfaces shall not be covered by paint, plating or other covering material unless contamination levels, as determined by a survey and documented and confirmed by a survey by the Division of Radiation Control, are below the limits specified. Contamination on the interior surfaces of pipes, drainlines, ductwork shall be determined by measurements using radiation survey instrument(s) and smear tests at all traps and other appropriate access points, provided that contamination at those locations are likely to be representative of contamination on the interior of pipes, drainlines, or ductwork.

ATTACHMENT

7

Reporting Material Events - SA-300
May 23, 2001

STP Procedure Approval

Reporting Material Events - SA-300

Issue Date: May 23, 2001

Review Date: May 23, 2003

Paul H. Lohaus *Director, STP*	*Original signed by:* *Paul H. Lohaus*	*Date: 05/23/01*
Kathleen Schneider *Acting Deputy Director, STP*	*Original signed by:* *Kathleen Schneider*	*Date: 05/23/01*
Patricia M. Larkins *Procedure Contact, STP*	*Original signed by:* *Patricia M. Larkins*	*Date: 04/19/01*

NOTE

The STP Director's Secretary is responsible for the maintenance of this master copy document as part of the STP Procedure manual. Any changes to the procedure will be the responsibility of the STP Procedure Contact. Copies of STP procedures will be distributed for information.

I. INTRODUCTION

This procedure establishes a process for the collection, control, and preliminary review of material events that have been reported to NRC by the Agreement States.

II. OBJECTIVES

A. To provide guidance for use by the Agreement States on reporting material events to NRC.

B. To provide guidance to NRC staff in the collection, coordination, and preliminary review of material events reported by the Agreement States.

III. BACKGROUND

A. The Atomic Energy Act (AEA) allows the Commission to enter an Agreement with a State to transfer regulatory authority over certain nuclear materials. In accordance with provisions contained in the AEA and the Energy Reorganization Act, and compatible Agreement State regulations, NRC and Agreement State licensees are required to report the occurrence of incidents and events involving the use of nuclear materials to the appropriate regulatory agency. For purposes of compatibility, the Agreement States report incidents and events involving the use of nuclear materials that have been reported by Agreement State licensees, to NRC.

B. The information collected on exposures, medical events, lost material, equipment failures, etc., that have occurred involving the licensed and unlicensed use of nuclear materials is invaluable in assessing trends or patterns, identifying generic issues, and recognizing any inadequacies or unreliability of specific equipment or procedures. The reported information will significantly aid in understanding why the event occurred and identifying any actions necessary to improve the effectiveness of NRC and Agreement State regulatory programs. The information is also used in preparation of NRC's annual performance report to Congress.

C. Nuclear Materials Events Database (NMED)

NMED contains the official agency historical collection of information on the occurrence, description, and resolution of events involving the use of radioactive material in the United States (source, byproduct, special nuclear material, naturally occurring, and accelerator-produced radioactive material). NMED accommodates the sharing of material event data submitted by Agreement States, non-Agreement States, and NRC licensees. NMED is maintained by the NRC's Office of Nuclear

Material Safety and Safeguards (NMSS). The NMSS contractor, Idaho National Engineering and Environmental Laboratory (INEEL), is responsible for coding and quality control of information.

IV. ROLES AND RESPONSIBILITIES

A. The Director, Office of State and Tribal Programs (STP), is responsible for the collection, coordination and, in cooperation with NMSS and the Office of Research (RES), the review of reports of incidents and events that have occurred involving the use of nuclear materials received from the Agreement States. NMSS is the designated agency lead office for review and evaluation of material events.

B. The Director, STP, participates in NRC management review and evaluation of Agreement State response to material events that have been identified by NRC as ***significant*** in relation to public health and safety.

C. The Deputy Director, STP, is responsible for assigning a staff member to serve as lead material events project manager.

D. The STP-designated Project Manager is responsible for coordination with the Agreement States and, in collaboration with NMSS and RES, review of material event reports submitted to STP.

E. The STP Director's Secretary is responsible for controlling STP distribution of Agreement State material event reports.

F. The Regional State Agreements Officer (RSAO) is a designated staff member, in an NRC regional office, who serves as the point of contact for the region and STP regarding Agreement State radiation control programs. STP staff should coordinate with the appropriate Regional State Agreement Officer (RSAO), regarding the receipt of a **significant** event report.

G. STP staff should coordinate with the appropriate STP Agreement State Project Officer (ASPO), responsible for providing back-up staff support to the RSAO (see STP Procedure SA-117), regarding the receipt of a **significant** event report.

V. GUIDANCE

A. Guidance for Agreement States

Agreement States should follow the guidance presented in the Appendix to this procedure entitled, *Handbook on Nuclear Material Event Reporting in the Agreement States*.

B. Guidance for STP Staff and Regional State Agreements Officers (RSAOs)

1. Reports of Significant Events Received from Agreement States by Phone.

   a. The following actions should be taken upon receipt of a report of a significant event from an Agreement State (i.e., events requiring 24-hour notification to the Operations Center by Agreement States). Receipt of such reports should occur infrequently since guidance to the Agreement States stipulates that reports of ***significant*** events should be provided directly to the NRC Operations Center.

   b. If the State has contacted you by phone, dial in the NRC Operations Center Headquarters Operations Officer (HOO) and have the State representative calling in -- provide the event notification information directly to the HOO.

   c. Inform the Project Manager, or the Project Manager backup, the STP Director and Deputy Director. STP staff should inform the RSAO.

2. E-mail, FAX, or Written (Hard Copy) Event Reports

   a. A copy of the event report should be provided to the Director and Deputy Director, STP, the appropriate Agreement State Project Officer (ASPO), and the Project Manager. A copy should also be sent to the NMED contractor, INEEL, through the STP Directors Secretary.

   b. Agreement State event reports shall be reviewed by the Project Manager, to identify any events that may be **significant** from the standpoint of health and safety (i.e., reportable by the licensee within 24 hours). If the event is identified as **significant** and it was not previously reported to the NRC by the Agreement State under the 24-hour reporting requirement, the Project Manager should notify the NRC Operations Center (HOO), and the appropriate regional RSAO. If an event indicates the possibility of a generic

issue, the Project Manager will provide notification to the Deputy Director, Division of Industrial and Medical Nuclear Safety, NMSS. NOTE: Hard copy event reports received by the RSAO shall be reviewed by the RSAO in accordance with regional procedures. The RSAO should provide a copy of the event report to the STP Project Manager. The RSAO will keep the STP Project Manager informed of the status of events that have been identified as ***significant***.

3. Electronic Event Reports (E-mail or PC diskette)

The Agreement States send electronic copies of event reports (via Internet e-mail or PC diskette) directly to the NMED contractor, INEEL, for entry into NMED. INEEL, in coordination with NMSS, conducts reviews of Agreement State material event reports that have been electronically provided to INEEL for safety significance. Information on any events identified as ***significant*** that were not previously identified by the Agreement State under the 24-hour reporting requirement or events that could pose possible generic issues are provided to STP and NMSS by INEEL.

4. NMSS Generic Assessment Panel (GAP)

a. The NMSS materials staff conduct a weekly GAP review of all material events received and entered into NMED from both Agreement States and NRC licensees. Events are reviewed for safety significance and generic implications, against the abnormal occurrence criteria, and as candidates for the quarterly Operational Events Briefing. Information on any possible generic issues identified in Agreement State events will be shared with the STP Project Manager. Any safety significant concerns and possible generic issues will also be shared with the Agreement States.

b. Based on the results of the review, it may be necessary to request additional clarifying information. Agreement State staff may be contacted by the RSAO, or a designee, when the event has been identified as safety significant.

3. For events that have not been identified as safety significant, when necessary, the RSAO, or a designee, may contact Agreement States for additional information within 30 days for a 15 day LER[1], and within 60 days for a 30 day LER after NRC receipt of the initial

[1]Licensee Event Report (LER)

notification of the occurrence of the event from the State. This schedule provides reasonable time for State review and evaluation, and voluntary submission of the follow-up information by the State. A request for follow-up information may also be sent routinely via email by the NMED contractor, (e.g., when the NMED record is incomplete after 60 days from receipt of the initial record).

5. NMSS Operational Events Briefing

   a. The Deputy Director, STP, and the Project Manager, or a designee, serve as the designated STP representatives for reporting on Agreement State events at the interoffice quarterly NMSS Operational Events Briefing. In some cases, Agreement State staff also participate and report on events that have occurred in their State. Staff of NMSS, STP, RES, the Regions, and the Office of the General Counsel, meet quarterly to discuss any NRC or Agreement State licensee material events that have occurred during the period covered that NRC has identified for review based on the "significance of the event and/or possible generic implications." The quarterly briefings track **significant** events, that have been identified for review, through closure and entry of the final complete record into NMED.

   b. The Project Manager is responsible for coordinating telephone (bridge) participation of an Agreement State in the briefing, when necessary, for discussion of ***significant*** events that have occurred in their respective State, and coordinates with the States on requests for additional information.

6. The designated Project Manager coordinates with the Agreement States, and participates, in cooperation with NMSS and RES, in the identification and review of Agreement State abnormal occurrence reports.

7. Periodically, the Project Manager may be requested by management to provide statistical information regarding the status of event reporting by the Agreement States. Information provided by the Agreement State and collected and maintained in NMED, should be used by the Project Manager, the ASPO, the RSAO, and the designated IMPEP[2] reviewer, to evaluate the effectiveness and completeness of Agreement State event information provided for entry into the NMED database.

---

[2]See STP Procedure SA-100, Implementation of the Integrated Materials Evaluation Program (IMPEP) and SA-105, Reviewing Common Performance Indicator #5 Response to Incidents and Allegations

VI. APPENDIX

Handbook on Nuclear Material Event Reporting in the Agreement States.

VII. REFERENCES

NRC Management Directive 8.1, *Abnormal Occurrence Reporting Procedure*, August 21, 1997.

Policy Statement on Adequacy of and Compatibility of Agreement State Programs, published in the Federal Register, 62 FR 46517 (September 3, 1997).

NRC Management Directive 5.6 *Integrated Material Performance Evaluation Program (IMPEP)*.

STP Procedure SA-100, *Implementation of the Integrated Performance Evaluation Program (IMPEP)*

STP Procedure SA-105, *Reviewing Common Performance Indicator #5 Response to Incidents and Allegations*

STP Procedure SA-117, *Agreement State Project Officers (ASPO)*

SA-300 Reporting Material Events
Appendix (Rev. 1)

Handbook on Nuclear Material Event Reporting in the Agreement States

Final Report

April 24, 2001

Office of State and Tribal Programs
U.S. Nuclear Regulatory Commission

Contact: Patricia M. Larkins

AVAILABILITY OF REFERENCE MATERIAL

NRC documents: Event Notifications, Preliminary Notifications, Inspection Manuals and Procedures, NUREG Series technical reports, Regulatory Guides, etc. are available at the NRC external Website under References at: http://www.nrc.gov/NRC/reference.html. The Office of State and Tribal Programs (STP) documents are available at the STP external Website at: http://www.hsrd.ornl.gov/nrc/.

Paperwork Reduction Act Statement

The information collections contained in this report are covered by the requirements of NRC regulations contained in Title 10 of the U.S. Code of Federal Regulations. The Agreement States collect this information under compatible Agreement State regulations.

The collection of event information has been approved by the U.S. Office of Management and Budget, as follows.

"This information request has been approved by **OMB 3150-0178**, expiration date 08/31/2003. The estimated burden per response to comply with this collection request is 1.25 hours. Forward any comments regarding the burden estimate to the Information and Records Management Branch (T-6 F33), U.S. Nuclear Regulatory Commission, Washington, DC 20555-0001, and to the Paperwork Reduction Project (3150-0052), Office of Management and Budget, Washington, DC 20503."

Public Protection Notification

If a document does not display a currently valid OMB control number, the NRC may not conduct or sponsor, and a person is not required to respond to, the information collection.

Abstract

The review and analysis of operational event information increases the effectiveness of the U.S. Nuclear Regulatory Commission (NRC) and Agreement State regulatory programs by identifying safety-significant events and concerns, and their causes. The information from reports of medical misadministrations, overexposures, equipment failures, and other events that have occurred involving the use of nuclear materials licensed by either the NRC or the Agreement States is invaluable in assessing trends or patterns and identifying possible inadequacies or unreliability of specific equipment or procedures. The reported information will significantly aid in understanding why the events occurred and identifying any actions necessary to improve the effectiveness of NRC and Agreement States regulatory programs. The information is also used in preparation of NRC's performance report to Congress. This handbook, which supercedes the previous February 20, 1998-version, has been developed to provide information to the staff of the Agreement and non-Agreement States that are responsible for the preparation of event reports for incidents and events involving the use of nuclear materials that have occurred in their State. Reporting of Agreement State material events to NRC is mandatory for purposes of compatibility. The handbook describes the procedure to be followed in reporting material events to NRC. Guidance is provided on what information should be reported, the level of detail, and where to report. Information is also provided on obtaining Federal assistance for radiological emergencies. Procedures for identifying and reporting Abnormal Occurrences (AOs) are also included. The objective of the handbook is to:

- Improve technical information
- Standardize format
- Ensure consistency
- Facilitate information retrieval

Table of Contents

Page

Abstract iii

1. Introduction 1

   1.5 Why do we collect event information? 1
   1.6 What is the governing regulatory authority? 2
   1.7 How do you determine if an event is reportable? 3
   1.8 What is the Nuclear Materials Events Database? 3
   1.9 Reporting Lost, Stolen and Abandoned Sources 4

2. Reporting Material Events 4

   2.1 Reporting Significant Events (24 hr. licensee notification) 4
   2.2 Initial NMED Record for Significant Events 5
   2.3 Radiological Emergency Response Assistance Available to the States for Significant Material Events 5
   2.4 30 - 60 Day Event Notification 7
   2.5 Reporting Follow-up Event Information 8

3. Minimum Basic Event Information for a Complete Report 9

4. Regulatory Reporting Requirements 11

5. NRC Publication and Distribution of Event Notifications 16

   5.1 Event Notifications (ENs) are Available on Internet 16
   5.2 Preliminary Notifications (PNs) are Used to Distribute Event Information 16

6. NRC Safety Reviews of Material Event Reports 16

   6.1 NRC Review of Material Events for Safety Significance and Generic Issues . . . 16
   6.2 Quarterly Operational Events Briefing Review of "Significant" Events 17

7. Abnormal Occurrence Guidelines and Criteria 18

   7.1 Introduction 18
   7.2 AO Policy Information 18
   7.3 AO Criteria 19
   7.4 Guidelines for AO Write Ups 24

Appendix:

Glossary 31
References 33

List of Tables

Table 1. Sample FAX to NRC Operations Center 6

Table 2. Event Report Cover Page 10

Table 3. Examples of Reportable Events 14

Table 4. Sample Industrial Radiography AO Report 26

Table 5. Sample Medical AO Report 28

1. Introduction

This handbook contains guidance for Agreement States on reporting material event information to the Nuclear Regulatory Commission (NRC) for events that have occurred in their State. It also provides guidance for use by non-Agreement States when reporting events involving lost, stolen or found sources of naturally occurring and accelerator-produced radioactive materials. The reported information aids in understanding why the events occurred and in identifying actions to help ensure safety and improve the overall effectiveness of the NRC and Agreement State regulatory programs. Guidance is provided on (1) reporting significant events to the NRC Operations Center; (2) providing 30-60 day notification and follow-up event information; (3) schedule for event reporting; (4) reporting formats (i.e., electronic reporting to the Nuclear Materials Events Database (NMED) or written reports (mail, Fax, or email) to the Director, Office of State and Tribal Programs (STP); and (5) reporting event information for events meeting the abnormal occurrence (AO) criteria. An appendix to the Handbook contains (1) a glossary of terms, and (2) a listing of reference materials. NOTE: This procedure does not contain guidance on NMED data entry (coding). For guidance on data entry, an electronic copy of the NMED users guide has been included under the *Help* support icon in the upgraded Microsoft Access 97/2000 version of the NMED software program.

1.1 Why do we collect event information?

Operating experience is an essential element in the regulatory process for insuring that licensed activities are conducted safely. Reporting operating incidents and events helps to identify deficiencies in the safe use of AEA radioactive material and to ensure that corrective actions are taken to prevent recurrence. The *Government Performance Results Act of 1994 (GPRA)*, required the Agency to establish measurable outcome oriented performance goals linked to Agency programs and activities in a strategic plan. An annual performance report to Congress is prepared that evaluates the materials program against the metric performance goals. The metric goals are based on current and historical event reporting data. A 1993 General Accounting Office (GAO) report identified the compilation and presentation of national materials data as an area for improvement and recommended that NRC take appropriate action to ensure that the information on radiation events is reported completely and accurately. Further, reliable information should be available to NRC, the Congress, and the States to identify patterns and trends and determine appropriate changes for the programs.[3] NRC conducts reviews of all operating experience reports, from both NRC licensees and Agreement States, to identify safety concerns early, and to further evaluate individual safety concerns for any *generic safety issues* (GSIs) that could apply to a broader class of licensees. Prompt reporting of event information, including 30 day report information, helps the staff identify or detect possible safety concerns as early as possible. An event or condition could, by itself appear

[3] Nuclear Regulation: Better Criteria and Data Would Help Ensure Safety of Nuclear Materials, GAO/RCED-93-90.

insignificant, but when compared with national information, could become a generic concern. In-depth analysis of event report data may result in the identification of actions that could lead to improvements in the effectiveness of NRC and Agreement State regulatory programs. Event analysis may also result in the issuance of information notices warning of possible safety concerns and assessment of the need for regulatory changes or revisions. Feedback is provided to Agreement State regulators, the industry, and the public.

NRC publishes a quarterly report that presents information on the results of statistical analysis of event data and any significant or generic issues or concerns. The *Nuclear Materials Events (NMED) Database Quarterly Report* is available in electronic form at the NMED Internet Website: http://nmed.inel.gov. A nuclear material newsletter is also published quarterly by NRC's Office of Nuclear Material Safety and Safeguards (NMSS) that includes information on safety concerns identified during that quarter.

1.2 What is the governing regulatory authority?

-- Under Section 274 of the AEA, Agreement States have assumed regulatory authority over byproduct source and certain quantities of special nuclear materials. The AEA directs NRC to cooperate with the States in the formulation of standards to protect employees or the general public against hazards of radiation and to assure that State and Commission programs will be coordinated and compatible. Article VI of the Agreement Between the State and the USNRC states that "the State and the Commission agree to keep each other informed of events, accidents, and licensee performance that may have generic implications or otherwise be of regulatory interest."

-- Under the AEA and the Energy Reorganization Act of 1974 (ERA), as amended, the NRC evaluates material event reports for both NRC and Agreement State licensees, and AOs that have occurred in licensed facilities. In addition, the ERA requires NRC to provide to Congress on an annual basis, information on significant events that meet the AO criteria.

-- Due to the importance of operating experience as an essential element in the regulatory process for ensuring that licensed activities are conducted safely, the Commission directed the staff to make Agreement State reporting of events to NRC's NMED database an item of compatibility (See Reference section, June 30, 1997, SECY-97-054). The implementing procedures are contained in STP Procedure SA-200 (See Reference section).

-- The guidance contained in this handbook is to assist NRC and Agreement State staff in the joint sharing and analysis of event information. It does not address evaluation of Agreement State programs. The AEA directs the Commission to periodically review actions taken by the States under the Agreements to insure adequacy and compatibility with the provisions of the Act. NRC conducts periodic evaluations of Agreement State programs under the *Integrated Materials Performance Evaluation*

Program (IMPEP), which includes an evaluation of event response, reporting, follow-up, and close-out. (See Reference for STP Procedure SA-100 (IMPEP))

1.3 How do you determine if an event is reportable?

Agreement States should report to NRC all events reported to their State by State licensees under State regulations equivalent to NRC's reporting requirements. Section 4 of this guide contains a listing of the *U.S. Code of Federal Regulations (10 CFR)* regulatory reporting requirements for material event information. The 10 CFR reporting requirements form the basis for equivalent reporting requirements in Agreement State regulations. The listing references the specific 10 CFR reporting requirements, followed by a brief description of the types of events that fall under the reporting requirement, and the periodicity for reporting. This list begins on page 11 of the "Handbook."

New Please note the new reference in All Agreement State Letter SP-98-038, dated May 5, 1998, regarding expansion of the Federal Bureau of Investigation (FBI) criminal investigative jurisdiction to include byproduct material. A revision to the U.S. Code assigns lead responsibility for material events involving ***theft or terrorist activities*** to the FBI.

The States are encouraged to voluntarily report an occurrence that actually happened (event) or something that may happen (condition) that does not meet the regulatory reporting criteria that the State believes might be of safety significance or of generic interest or concern, or involves media interest.

1.4 What is the Nuclear Materials Events Database (NMED)?

The NMED database contains a historical collection of information on the occurrence, description, and resolution of events involving the use of radioactive material in the United States (source, byproduct, special nuclear material, naturally occurring, and accelerator-produced radioactive material). NMED accommodates the sharing of material event data submitted by Agreement and non-Agreement States and the NRC. The data includes information on material events from January 1990 through the present. The database is maintained by NMSS through a contractor, Idaho National Engineering and Environmental Laboratory (INEEL).

1.5 Reporting Lost, Stolen and Abandoned Sources

New The NMED database has been expanded to include additional information on ***lost, stolen, and abandoned sources*** in coordination with a national effort led by the *Conference of Radiation Control Program Directors, Inc., (CRCPD)* to track lost and found radioactive

material (including non-AEA and unlicensed material) found in both Agreement and non-Agreement States. The data will be collected from all States, and in some cases non-licensee organizations and members of the public. Non-Agreement States should follow the guidance provided in Section 2 ."Reporting Material Events," to report any lost, stolen and abandoned non-AEA and unlicensed material. (See All Agreement State Letter SP-98-018, March 17, 1998).

NOTE: FBI notification should be considered if the event involves the possibility of theft or terrorist activities. Based on health and safety significance the issuance of a press release should also be considered.

2. Reporting Material Events

In accordance with the provisions of compatible Agreement State regulations, Agreement State licensees are required to report the occurrence of material incidents and events to the Agreement State regulatory agency. As an item of compatibility, the Agreement States provide reports of incidents and events involving the use of nuclear materials by Agreement State licensees to NRC. Non-Agreement States have been requested by CRCPD to voluntarily report any lost, stolen and abandoned non-AEA and unlicensed material. This section presents information on reporting (1) significant events to the NRC Operations Center, (2) 30-60 day reportable events, and (3) follow-up event information.

2.1 Reporting Significant Events (Reportable within 24 hrs. by Agreement State licensee)

Agreement States should report significant events to the NRC Operations Center within 24 hours of notification by an Agreement State licensee. Significant events are those requiring prompt notification as determined under applicable Agreement State regulations. Information should be reported to the NRC Operations Center via voice at (301) 816-5100 or (301) 951-0550 or by FAX at (301) 816-5151. A Sample FAX page has been included at the end of Section 2, see Table 1. (For reference, NRC reporting requirements for significant events are presented in Section 4.)

2.2 Initial NMED Record for Significant Events

A copy of the initial event notification information received from an Agreement State on significant events is used by INEEL to establish an initial record in the national NMED database. INEEL will use the *Event Report Identification No.*, consisting of the State ID, year, and a sequential ID No., e.g., (TN-00-001) when entering the initial event record into NMED. The State should use that Event Report Identification number when providing updates to the initial NMED event record using the State's local Microsoft Access, NMED

database. (See Section 2.5, of this Handbook for guidance on reporting follow-up event information to NMED.)

2.3 *Radiological Emergency Response Assistance Available to the States for Significant Material Events*

States may request Federal assistance through the NRC Operations Center staff. The Federal government, upon request, has the capability to provide assistance to States in responding to radiological emergencies. Under the Federal Radiological Emergency Response Plan (FRERP), NRC is the lead Federal agency (LFA) for radiological emergencies involving AEA material where the material can be traced back to an individual NRC or Agreement State licensee. As the LFA, NRC is responsible for coordination of the Federal response, including providing assistance from NRC and arranging for assistance from other agencies, e.g., FEMA, DOE, etc., as requested by the States. Federal assistance is available to provide ground and aerial radiological monitoring (e.g., missing source), medical advice on radiation effects and treatment, consequence projection, and protective action assessment.

FAX TO: NRC OPERATIONS CENTER

Agreement State Agency:	**[State]** Dept. of Health, Division of Radiation Protection
Event Report ID No.:	State ID, YR, No., e.g. WA-00-002
License No.:	CL-Z00X-1
Licensee:	County Inspection Inc.
Event date and time:	April 6, 2001, between 4:00 and 5:00 am
Event location:	City, State
Event type:	Stolen Radiography Device
Notifications:	**[State]** Dept. of Health has notified local police, and the FBI due to possibility of unlawful criminal activity. Press release has not been issued at this time.
Event description:	**[State]** Dept. of Health was notified on **[date]**, by a representative from **[licensee]**, of the theft of a radiography camera from a locked equipment trailer on Thursday morning, April 6, 2001. The locked camera and the keys to the camera were stolen. The radiography camera is identified as XYZ Company, Model 160B, serial No. B-3333, containing **[isotope]** **[activity, when known]** 88.3 curies of Iridium-192. The device cables were not stolen. The State has an inspector on site and will continue to keep NRC informed of the status of our investigation.
Transport vehicle description:	N/A
Media attention:	**[State]** Dept. of Health has received inquiries from the media
Point of contact:	Bob Brown, 301-415-0001

Table 1. Sample FAX Sheet to NRC Operations Center

2.4 *30 - 60 Day Event Notification*

Agreement States should report events requiring greater than 24 hours notification by Agreement States licensees, as determined under applicable Agreement State regulations, to NRC on a monthly basis. (For reference, NRC reporting requirements for events are presented in Section 4.) Reports may be made either electronically or in written form. NRC staff encourages Agreement States to electronically report all events using the NMED database software and entry screens.

The following paragraphs provide additional information on reporting events and NMED. For guidance on data entry (coding), an electronic copy of the NMED users guide has been included under the *Help* support icon in the upgraded Microsoft Access 97/2000 version of the NMED software program. The upgrade NMED software program also contains downloadable sample NMED data entry screen (previously included in this Handbook).

a. ***Assign Event Report Identification No.***

This number should appear on all reports, including preliminary, initial notification reports, and any follow-up reports. The Event Report Notification No. should consist of the State or State agency ID, year, and a sequentially assigned ID number, e.g., **(NYDOL-99-001), (NYC-99-001), (TX-00-001), (GA-00-001), (NE-00-001), (CA-00-001)** for each agency in your State. NOTE: The Agreement State ID number field in NMED can accommodate up to four characters for the State or agency identifier. The "Agreement State ID No." should be specified by the State for all telephone, electronic or written notification involving each specific event.

b. ***Basic Event Information***

Section 3 provides a listing of the minimum event information that should be provided. When submitting an initial event report, please provide as much information as is known at the time the report is prepared regarding the items indicated in Section 3. Updated information should be subsequently provided in follow-up reports (see Section 2.5).

c. ***Electronic Reporting to NMED***

Provide an electronic NMED report via E-mail or PC diskette to the NMED contractor, based on the information provided by the Agreement State licensee in the 5, 15, 30 or 60 day report. If you need additional help, you may contact the INEEL NMED Project Manager, Dante Huntsman, electronically via Internet email at: dhun@inel.gov, or by telephone at 208-526-2741, or the NRC NMED Project Manager, Sam Pettijohn, via e-mail SLP@nrc.gov or telephone: 301-415-6822.

d. ***Internet Access to NMED***

An Internet (query only) version of NMED with several drop-down point-and-click menus is available. The Internet version of the NMED program eliminates the need for INEEL to provide users with periodic diskette updates of the national NMED data. Users may download the latest NMED national database information via Internet file transfer. Internet access to the NMED is currently controlled either by a user -ID and password, or a user -ID and Internet Protocol (IP) Addresses. If passwords are required contact Dante Huntsman, INEEL by e-mail message at: dhun@inel.gov or by telephone at 208-526-2741. Future plans include upgrading the Internet version of NMED to provide open public access to material event information. *NOTE: Agreement States should continue to use the Microsoft Access data entry program for maintaining a local events database and for submitting NMED event reports to INEEL.*

e. ***Written Event Reports***

Written event reports, including e-mail or fax, should be sent to the Director, STP. Written report information should be comparable to the minimum basic information identified in Section 3. Reports should be provided in an optical character recognition (OCR) scannable format. Please include an ***Event Report Cover Page*** for all written form event information provided to NRC. Use of the Event Report Cover Page helps ensure our Document Control staff can readily identify, classify and appropriately record the document. A sample cover page is provided on page 10 of this Handbook.

2.5 *Reporting Follow-up Event Information*

Follow-up material event reports--providing the results of investigations into what, where, when and how the event or conditions occurred--through resolution and close out, should be provided for all events, both significant (24 hr. reportable) and 30-60 day reportable events.

a. Follow-up reports through a closeout of the event should be provided electronically or in writing to NRC on a monthly basis. Enter any new or supplemental information to the initial NMED record. A complete event report should include all investigative and medical information through closeout. (See minimum basic event information in Section 3.)

b. The initial event report identification number (**State\Yr.\No.**) should be included whenever additional follow-up event information is provided. Indicate that it is a follow-up report.

c. Additionally, when providing follow-up NMED event information, provide clear reference to documents on file that the State used to generate the NMED event report, e.g., a licensee inspection report dated mm/dd/yr., if applicable and appropriate.

d. Any follow-up information that revises earlier information or provides additional information on a given event should be provided to ensure a complete historical NMED record.

3. Minimum Basic Event Information for a Complete Report

The following listing identifies the minimum basic information that should be provided for all events.

a. What happened, and when?	
1. Agreement State, Event Report ID No.	7. Sealed source, device, etc, (make, model #, serial #)
2. Licensee (Name, address), License No.	8. Leak test information, when applicable
3. Event date and time of occurrence	9. Equipment (make, model #, serial #), and clear description of any equipment problems.
4. Date notified of event by licensee or non-licensee	10. Persons involved, consequences
5. Radionuclide, activity	11. Transportation, identify shipper, package type and ID No.
6. Any exposures (indicate short and long-term effects.)	12. Abnormal occurrence (Y/N)
b. Why did it happen?	
13. Cause, and contributing factors	
c. What actions did the licensee take to prevent recurrence?	
14. Notifications: patient, physician	15. Licensee corrective actions
d. Events involving lost, stolen or abandoned material	
16. Provide status through resolution (update record when found)	
e. What actions did the State take?	
17. Notifications: local police, FBI, and other States; as needed	18. Enforcement actions
f. Describe any generic implications	
19. Identify any possible generic safety concerns	20. Potential for others to experience the same event

EVENT REPORT COVER PAGE

AGREEMENT STATE

EVENT REPORT ID NO. __ - __ - ___
(State\Yr.\No.)

DATE:

TO:

Director
Office of State and Tribal Programs

SUBJECT:

STATE:

Signature and Title: _____

_____

_____

_____

Public Availability of Event Information: Any event information that is considered preliminary predecisional information by the State should be clearly identified on the cover page as follows: "Preliminary, **Not for Public Disclosure.**" For event information in NRC's possession, the final determination on whether to withhold from public disclosure will be made by NRC on a case-by-case basis in accordance with the requirements of 10 CFR Part 9.

Table 2. Event Report Cover Page

4. Regulatory Reporting Requirements

NRC reporting requirements are contained in multiple Parts of Title 10 of the Code of Federal Regulations (10 CFR). The following provides a complete listing of the current 10 CFR material reporting requirements for which Agreement States should have compatible regulations.

10 CFR Part	Reporting Category		Reporting Requirement	Notification
	Significant	30-60 Day		
20, Standards for Protection Against Radiation	20.1906(d)(1)		reports of removable contamination on package >limits in 10 CFR 71.87.	Immediate
	20.1906(d)(2)		radiation levels on package > limits in 10 CFR 71.47	Immediate
	20.2201(a)(1)(i)		reports of theft or loss of licensed material > 1000 X App C value	Immediate
		20.2201(a)(1)(ii)	reports of theft or loss of licensed material > 10 X App. C value	30 days
	20.2202(a)(1)		exposure (real or threatened) • TEDE of 25 rem (.25 Sv), or eye or lens dose equiv. of 75 rem (.75 Sv) or shallow dose equiv. (skin\extremities) of 250 rads (2.5 Gy).	Immediate
	20.2202(b)(1)		exposure (real or threatened) • TEDE of 5 rem (.05 Sv), or eye or lens dose equiv. of 15 rem (.15 Sv), or shallow dose equiv. (skin\extremities) of 50 rads (.5 Gy).	24 hours
	20.2202(a)(2)		release where individual could have intake > 5 X ALI over 24 hours.	Immediate
	20.2202(b)(2)		release where individual could have intake > 1 X ALI over 24 hours	24 hours
		20.2203(a), (b)	radiation exposures, releases or concentrations of radioactive material that exceed the limits.	30 days
21, Reporting of Defects & Noncompliance		21.21(a)(1-2)	reporting of defect in basic component, structure or system.[4]	60 days

[4] Not a compatibility requirement for Agreement States, but States voluntarily provide information on equipment failure and defects.

4. Regulatory Reporting Requirements

NRC reporting requirements are contained in multiple Parts of Title 10 of the Code of Federal Regulations (10 CFR). The following provides a complete listing of the current 10 CFR material reporting requirements for which Agreement States should have compatible regulations.

10 CFR Part	Reporting Category		Reporting Requirement	Notification
	Significant	30-60 Day		
30, Rules of General Applicability to Domestic Licensing of Byproduct Material	30.50(a)		events involving prevention of immediate protective action, involving exposures or releases that could exceed regulatory limits	4 hours
	30.50(b)(1)		event involving unplanned contamination restricting access >24 hours (no isotopes with half-lives <24 hrs)	24 hours
	30.50(b)(2)		event involving equipment failure or disability to function as designed when equipment is required to be available and operable and no redundant equipment is available and operable	24 hours
	30.50(b)(3)		event involving unplanned medical treatment of contaminated person	24 hours
	30.50(b)(4)		event involving fire, explosion affecting integrity of material, device or container, and material exceeds 5Xs ALI	24 hours
31, General Domestic Licenses for Byproduct Material		31.5(c)(5)	failure or damage to shielding, on-off mechanism or indicator, or • 0.005 microcuries (185 Bq) removable radioactive material for generally licensed device	30 days
34, Licenses for Radiography & Radiation Safety Requirements for Radiographic Operations	34.27(d)		reporting of leaking sources, leak test results • 0.005 microcurie (185 Bq)	5 days
		34.101(a)	radiography source disconnect, inability to retract source, or component failure (critical to safe operation of device)	30 days

4. Regulatory Reporting Requirements

NRC reporting requirements are contained in multiple Parts of Title 10 of the Code of Federal Regulations (10 CFR). The following provides a complete listing of the current 10 CFR material reporting requirements for which Agreement States should have compatible regulations.

10 CFR Part	Reporting Category		Reporting Requirement	Notification
	Significant	30-60 Day		
35, Medical Use of Byproduct Material	35.33(a)		notifications and reports of misadministrations[5]	Next day (24 hours)
	35.59(e)(2)		leak testing sealed sources and brachytherapy sources	5 days
36, Licenses & Radiation Safety Requirements for Irradiators	36.83		irradiator events, release of material, defective components, systems or structures; (if not reported under other 10 CFR reporting requirements)	24 hours
39, Licenses & Radiation Safety Requirements for Well-Logging	39.35		leaking sealed sources found during periodic leak testing requirement	5 days
	39.77 (a)		well logging source rupture	Immediate
		39.77(b)	theft or loss, exposures, excessive concentration of rad material	30 days
		39.77(c) and (d)	when apparent recovery impossible, irretrievable source, abandonment	60 days
40, Domestic Licensing of Source Material	40.26(c)(2)		tailings or waste retention system failure that results in a release of material into unrestricted areas, or unusual conditions	Immediate
	40.60(a) (b)(1)-(b)(4) (c)(1)-(c)(2)		requirements for domestic licensing of source material to receive, possess, use, transfer, or deliver source and byproduct material (NOTE: Same as 30.50 above)	
70, Domestic Licensing of Special Nuclear Material	70.50(a)	70.50 (b) (c)	events involving special nuclear material (SNM)	(a) 24 hours (b) 30 days (c) 60 days

[5] Misadministration events require 15 day licensee event report and 24 hour notification to referring physician and patient.

4. Regulatory Reporting Requirements

NRC reporting requirements are contained in multiple Parts of Title 10 of the Code of Federal Regulations (10 CFR). The following provides a complete listing of the current 10 CFR material reporting requirements for which Agreement States should have compatible regulations.

10 CFR Part	Reporting Category		Reporting Requirement	Notification
	Significant	30-60 Day		

Table 3. EXAMPLES OF REPORTABLE EVENTS	
This Table provides examples of reportable material events or occurrences that are required to be reported by both NRC and Agreement State material licensees. The Table addresses specific reporting requirements for either immediate notification (within 24 hours or less) or 30 day written reports.	
Immediately reportable under 10 CFR 20.2201	**Stolen Portable Moisture Density Gauge** Licensee reported that a [Manufacturer] [Model #] [serial #] portable gauge containing 10 millicuries of Cesium-137 and 50 millicuries of Americium-241:Beryllium was stolen from the licensee's vehicle parked at the licensee's facility. The gauge was padlocked in its original carrying case. The State is following the incident and working with local authorities to develop a press release. Local law enforcement and the FBI have been notified. Follow-up information will be provided to NRC on the recovery of the stolen gauge and entered into NMED.
Reportable within 24 hours under 10 CFR 30.50(b) (2) and 20.2201	**Possible Loss of Control and Damage to Portable Gauge** Licensee reported that a [Manufacturer] [Model #] [serial #] moisture density gauge had been damaged on March 28, 2001. The gauge contained 7.9 millicuries of Cesium-137 and 40 millicuries of Americium-241. A technician left the gauge unattended for a brief time and upon returning found that a construction vehicle had run over the gauge. The source rod was broken but the source was undamaged and remained in the shielded position. Wipe tests and instrument survey verified no leakage. The gauge was returned to the manufacturer for repair. The licensee was cited for not keeping licensed material under constant surveillance in an unrestricted area. Report has been entered in NMED.
Reportable within 30 days under 20.1906	**Shipment of Brachytherapy Sources Received with Radiation Levels Exceeding Regulatory Limits** A medical licensee reported receiving a shipment of two packages containing cesium-137 brachytherapy sources. Radiation surveys of the packages with an ion chamber detector found radiation levels of 250 millirem per hour on one package, which exceeds the State and Federal limit at the external surface of a package of 200 millirem per hour. The third and final package was received two days later with radiation levels of 400 millirem per hour at the surface of the package. The shipper has retained a consultant to determine the cause of the elevated radiation levels. The State will keep NRC informed of the results of the consultants review of the event, and the information will be entered into NMED.
Reportable within 24 hours under 10 CFR 20.1301, 20.2203	**Exposure to Nonradiation Worker at a Licensed Facility** A licensee reported to the State that a nonradiation worker had received an exposure as a result of picking up a 5 curie Americium-241:Beryllium neutron source used for well logging and placing it in his pocket. The worker, a temporary contractor employee, was cleaning a well logging tool at the licensee facility. (The licensee was under the assumption that all of the source material had been removed from the equipment.) While cleaning the tool, the source fell out, and the worker picked it up and placed it his pocket. The worker was not a radiation worker and had no knowledge of what the object was. Preliminary calculations performed by [identify Consultant/Contractor] indicate that the individual may have received a dose of 4-6 Rem. The licensee's RSO is investigating the incident. The State plans to keep NRC informed of the ongoing results of the investigation, and the information will be entered into NMED.

Reportable within 24 hours under 10 CFR Part 35 and 30.50(b)(2)	**Possible Misadministration involving a Teletherapy Unit Malfunction** A patient undergoing a Cobalt-60 Teletherapy treatment with a [Manufacturer][Model #] received an unintended exposure. The RSO estimated that the patient received an exposure of 138 centiGray (Rads) to a depth of 0.5 centimeters to the wrong treatment site, based on a possible total treatment time of 1.5 minutes. The exposure occurred as a result of two power disruptions during a thunderstorm. The loss of electrical power caused the unit table to move which resulted in treatment to the wrong site. The patient received 0.35 minutes of the intended fractionated treatment time of 1.5 minutes. The patient was prescribed a total dose of 5040cGy to be given in 28 fractions of 180 cGy per day at the rate of 5 fractions per week. The prescribing physician elected not to make up the missed dose. The prescribing physician indicated that the patient is not expected to have any adverse effects from the misadministration. The patient and referring physician were notified of the event. The licensee was able to recreate the event to demonstrate how the event occurred. The licensee has contacted the manufacturer. The State will keep NRC informed of the results of the review for any generic implications.
Reportable within 24 hours under 10 CFR 36.83(a)(9)	**Possible Loss of Water or Leakage from Source Water Pool at Irradiator Facility** Licensee notified the State that the controls at a Co-60 irradiator facility were indicating that the water level was low, circulating pump off, and fill valves were open. The pool water level gauge indicated a pool water level of 93 inches, well below the normal level of 137 inches. Previous incidents indicated that a loss of compressed air pressure to the water level gauge could result in an erroneously low water level gauge reading, causing the automatic pool fill valves to open, and the pool water circulating pump to turn off. The compressed air system pressure was found to be in the normal range, but the operator found water and congealed oil in the air line supplying the pool water level gauge, and the air line supplying the elevator control valve. Further investigation found that the compressed air line water traps were full of water. A past similar incident resulted in a failure to raise the elevator. The operator then verified that the pool water level was in fact normal. The licensee requested the building maintenance personnel to diagnose and repair the compressed air supply immediately, to prevent the conductivity in the pool water from reaching abnormal levels as a result of the resin filter circulating pump being automatically turned off by the false low pool water level meter reading. Maintenance personnel responded and replaced a failed compressed air dryer, and monitored the open air lines to clear the lines of water. A float activated automatic water drain was installed in the air line to prevent a possible recurrence by allowing any water to automatically drain from the air line.

5. NRC Publication and Distribution of Event Notifications

5.1 *Event Notifications (ENs) are Available on Internet*

All events reported to the NRC Operations Center are currently entered into the NRC Event Notification (EN) database. ENs are publicly available through Internet on NRC's external home page at (http://www.nrc.gov/opa) under *Event Reports*, within one work day of notification. As a result of public access to this information, Agreement and non-Agreement States may receive contacts from the public or media regarding events and requesting additional information.

5.2 *Preliminary Notifications (PNs) are Used to Distribute Event Information*

Preliminary Notifications (PNs) are brief summary reports of significant events issued by the NRC staff to notify the Commission of the occurrence of a significant event. PNs are based on information provided by State radiation control program staff. PNs are usually issued within approximately two hours of notification of the occurrence of a significant event. The PN will be publicly available through Internet on NRC's external home page under PN Reports at (http//www.nrc.gov/OPA/pn). Updates to PNs occur when significant additional information about an event is provided to NRC. When preparing PNs, NRC staff may contact the State for additional information on the event.

6. NRC Safety Reviews of Material Event Reports

6.1 *NRC Review of Material Events for Safety Significance and Generic Issues* (New)

A. A ***Generic Assessment Panel (GAP)*** has been established within NRC to review all material event information. A weekly review of all new NRC or Agreement State licensee event information that has been entered into NMED is conducted by NRC staff. The objective of the review is to identify any events that may be safety significant or may involve GSIs, i.e., equipment malfunction or failure, significant exposures, etc. GSI's are defined as a safety concern that may affect the design, construction, operation, or decommissioning of all, several, or a class of regulated operations, and may have the potential to require licensees or certificate holders to make safety improvements and/or require new or revised requirements or guidance.

B. ***Requests for additional information*:** Based on the results of the GAP review, Agreement State staff may be contacted by the Regional State Agreements Officer (RSAO) by voice or email to discuss the event. Additional information may be requested to help determine the safety significance and any possible generic implications (e.g., equipment malfunction or failure, significant exposures). Specific issues identified as a result of the review are tracked through close-out of the event. To provide the States reasonable time for review and investigation of reported events, any requests for additional information to States will be conducted within the following schedule.

1. Schedule for requesting additional information:

If necessary, NRC staff may contact Agreement States for additional information on ***significant events*** that pose or could pose public health and safety risks. Such requests would occur on an as needed basis, possibly within hours to a few days of notification of the occurrence of the event, based on the safety significance.

For events that have not been identified as safety significant, when necessary, the RSAO, or a designee, may contact Agreement States for additional information within 30 days for a (15 day event notification)) and within 60 days for a (30 day event notification) after NRC's receipt of the initial notification from the State. A request for follow-up information may also be sent routinely via email by the NMED contractor, (e.g., when the NMED record is incomplete after 60 days from receipt of the initial record).

6.2 Quarterly Operational Events Briefing Review of "Significant" Events

A. Events identified as having a "significant" potential risk to public health and safety may receive additional NRC management review at the quarterly NRC Operational Events Briefing. The quarterly briefing, attended by managers and staff from the offices of NMSS, STP, Incident Response Operations (IRO), Nuclear Regulatory Research (RES), and the Regions is convened to review and assess health and safety-related issues, e.g., cause, effects, generic implications, mitigating actions, etc. NRC headquarters and region staff continue to follow-up and review material events discussed at the *operational events briefing* through closure of the event, which includes checking to see that the final report information has been entered into NMED. Based on potential safety risks identified as a result of event review and analyses, NRC may take actions to reduce potential health and safety risks to the public by issuing safety-related notifications to licensees, concerning software problems, equipment modifications, etc. Further research and analysis may result in regulatory or programmatic changes.

B. Agreement State staff may be requested to participate in the briefings by telephone to discuss specific events, the status, results of licensee or State investigation activities and licensee corrective actions, and the potential generic significance of the event. Agreement State participation helps in the exchange of event information and in follow-up actions if generic implications are identified.

7. Abnormal Occurrence Guidelines and Criteria

7.1 *Introduction*

This section presents the guidelines and criteria to be followed when assessing the significance of an event or occurrence to see if it meets the criteria established to identify an abnormal occurrence (AO). Section 208 of the Energy Reorganization Act of 1974 (ERA) (Public Law 93-438, 42 USC 5848) identifies an abnormal occurrence as an unscheduled incident or event that the Commission determines to be significant from the standpoint of public health or safety. Section 208 of the Act also requires that the Commission inform Congress of any abnormal occurrences. The Agreement States support the NRC in their effort to keep Congress apprised of any significant events that may directly affect public health or safety by providing information on proposed AOs that have occurred in their State.

7.2 *AO Policy Information*

The Commission submits a report to Congress identifying any AOs. The Federal Reports Elimination and Sunset Act of 1995 requires that AOs be reported to Congress on an annual basis (see "Report to Congress on Abnormal Occurrences, Fiscal Year 1996," NUREG-0090, Vol. 19). Section 208 of the ERA indicates that each report shall contain:

(1) The date and place of each occurrence;
(2) The nature and probable consequence of each occurrence;
(3) The cause or causes of each; and
(4) Any action taken to prevent recurrence.

As specified in Section 208, within 15 days of receiving information of each AO, the Commission shall provide as wide dissemination to the public as reasonably possible as soon as such information becomes available.

A final AO policy statement containing criteria for determining an AO was published in the *Federal Register* on December 19, 1996, (61 FR 67072). Revised AO criteria were published in the *Federal Register* on April 17, 1997 (62 FR 18820) to incorporate minor changes and to revise criterion III covering Fuel Cycle Licensees.

An incident or event will be considered an AO if it involves a major reduction in the degree of protection of the public health or safety. This type of incident or event would have a moderate or severe impact on the public health or safety and could include, but need not be limited to the following:

(1) Moderate exposure to, or release of, radioactive material licensed by or otherwise regulated by the Commission;
(2) Major degradation of essential safety-related equipment; or
(3) Major deficiencies in design, construction, use of, or management controls for facilities or radioactive material licensed by or otherwise regulated by the Commission.

7.3 *AO Criteria*

Agreement State staff should routinely screen events against the AO criteria as part of their routine program. Any events identified as potential AOs should be reported to NRC. Additionally, Agreement States are requested to prepare a special written report for potential AOs. Agreement State staff should follow the guidelines for preparing AO write-ups contained in Section 7.4 of this Handbook. When questions arise on a given event, it may sometimes be necessary for NRC to directly contact an Agreement State representative and request additional information.

The criteria for determining an AO and the guidelines for "Other Events of Interest" were stated in an NRC Policy Statement. The following AO criteria was published in the *Federal Register* on December 19, 1996, (61 FR 76072). The policy statement was revised to include criteria for gaseous diffusion plants and published in the *Federal Register* on April 17, 1997, (62 FR 18820).

The guidelines were revised for Appendix C "Other Events of Interest" by the Commission in a Staff Requirements Memorandum, SECY-98-175, dated September 4, 1998.

AO Criteria

As published in the Federal Register on December 19, 1996 (61 FR 67072) and as revised and published on April 17, 1997 (62 FR 18820) to incorporate gaseous diffusion plants.

Criteria by types of events used to determine which incidents or events will be considered for reporting as AOs are as follows:

I. For All Licensees.

A. Human Exposure to Radiation from Licensed Material.

1. Any unintended radiation exposure[6] to an adult (any individual 18 years of age or older) resulting in an annual total effective dose equivalent (TEDE) of 250 millisievert (mSv) (25 rem) or more; or an annual sum of the deep dose equivalent (external dose) and committed dose equivalent (intake of radioactive material) to any individual organ or tissue other than the lens of the eye, bone marrow and the gonads, of 2500 mSv (250 rem) or more; or an annual dose equivalent to the lens of the eye, of 1 Sv (100 rem) or more; or an annual sum of the deep dose equivalent and committed dose equivalent to the bone marrow, and the gonads, of 1 Sv (100 rem) or more; or an annual shallow-dose equivalent to the skin or extremities of 2500 mSv (250 rem) or more.

2. Any unintended radiation exposure to any minor (an individual less than 18 years of age) resulting in an annual TEDE of 50 mSv (5 rem) or more, or to an embryo/fetus resulting in a dose equivalent of 50 mSv (5 rem) or more.

3. Any radiation exposure that has resulted in unintended permanent functional damage to an organ or a physiological system as determined by a physician.

B. Discharge or Dispersal of Radioactive Material from its Intended Place of Confinement.

---

[6] An "unintended radiation exposure" includes any occupational exposure, exposure to the general public, or exposure as a result of a medical misadministration (as defined in §35.2) involving the wrong individual that exceeds the reporting values established in the regulations.

All other reported medical misadministrations will be considered for reporting as an AO under the criteria for medical licensees. In addition, unintended radiation exposures include any exposure to a nursing child, fetus, or embryo as a result of an exposure (other than an occupational exposure to an undeclared pregnant woman) to a nursing mother or pregnant woman above specified values.

1. The release of radioactive material to an unrestricted area in concentrations which, if averaged over a period of 24 hours, exceed 5000 times the values specified in Table 2 of Appendix B to 10 CFR Part 20, unless the licensee has demonstrated compliance with §20.1301 using §§20.1302(b)(1) or 20.1302(b)(2)(ii).

2 Radiation levels in excess of the design values for a package, or the loss of confinement of radioactive material resulting in one or more of the following: (a) a radiation dose rate of 10 mSv (1 rem) per hour or more at 1 meter (3.28 feet) from the accessible external surface of a package containing radioactive material; (b) a radiation dose rate of 50 mSv (5 rem) per hour or more on the accessible external surface of a package containing radioactive material and that meet the requirements for "exclusive use" as defined in 10 CFR 71.47; or (c) release of radioactive material from a package in amounts greater than the regulatory limits in 10 CFR 71.51(a)(2).

C. ***Theft, Diversion, or Loss of Licensed Material, or Sabotage or Security Breach.***[7]

1. Any lost, stolen, or abandoned sources that exceed 0.01 times the A_1 values, as listed in 10 CFR Part 71, Appendix A, Table A-1, for special form (sealed/nondispersible) sources, or the smaller of the A_2 or 0.01 times the A_1 values, as listed in Table A-1, for normal form (unsealed/dispersible) sources or for sources for which the form is not known. Excluded from reporting under this criterion are those events involving sources that are lost, stolen, or abandoned under the following conditions: sources abandoned in accordance with the requirements of 10 CFR 39.77(c); sealed sources contained in labeled, rugged source housings; recovered sources with sufficient indication that doses in excess of the reporting thresholds specified in AO criteria I.A.1 and I.A.2 did not occur during the time the source was missing; and unrecoverable sources lost under such conditions that doses in excess of the reporting thresholds specified in AO criteria I.A.1 and I.A.2 were not known to have occurred.

2. A substantiated case of actual or attempted theft or diversion of licensed material or sabotage of a facility.

[7] Information pertaining to certain incidents may be either classified or under consideration for classification because of national security implications. Classified information will be withheld when formally reporting these incidents in accordance with Section 208 of the Energy Reorganization Act of 1974, as amended. Any classified details regarding these incidents would be available to the Congress, upon request, under appropriate security arrangements.

3. Any substantiated loss of special nuclear material or any substantiated inventory discrepancy that is judged to be significant relative to normally expected performance, and that is judged to be caused by theft or diversion or by substantial breakdown of the accountability system.
4. Any substantial breakdown of physical security or material control (i.e., access control containment or accountability systems) that significantly weakened the protection against theft, diversion, or sabotage.

D. Other Events (i.e., those concerning design, analysis, construction, testing, operation, use, or disposal of licensed facilities or regulated materials).

1. An accidental criticality [10 CFR 70.52(a)].

2. A major deficiency in design, construction, control, or operation having significant safety implications requiring immediate remedial action.

3. A serious deficiency in management or procedural controls in major areas.

4. Series of events (where individual events are not of major importance), recurring incidents, and incidents with implications for similar facilities (generic incidents) that create a major safety concern.

II. For Commercial Nuclear Power Plant Licensees.

A. Malfunction of Facility, Structures, or Equipment.

1. Exceeding a safety limit of license technical specification (TS) [§50.36(c)].

2. Serious degradation of fuel integrity, primary coolant pressure boundary, or primary containment boundary.

3. Loss of plant capability to perform essential safety functions so that a release of radioactive materials, which could result in exceeding the dose limits of 10 CFR Part 100 or 5 times the dose limits of 10 CFR Part 50, Appendix A, General Design Criterion (GDC) 19, could occur from a postulated transient or accident (e.g., loss of emergency core cooling system, loss of control rod system).

B. ***Design or Safety Analysis Deficiency, Personnel Error, or Procedural or Administrative Inadequacy.***

1. Discovery of a major condition not specifically considered in the safety analysis report (SAR) or TS that requires immediate remedial action.

2. Personnel error or procedural deficiencies that result in loss of plant capability to perform essential safety functions so that a release of radioactive materials, which could result in exceeding the dose limits of 10 CFR Part 100 or 5 times the dose limits of 10 CFR Part 50, Appendix A, GDC 19, could occur from a postulated transient or accident (e.g., loss of emergency core cooling system, loss of control rod system).

III. ***For Fuel Cycle Facilities.***

1. A shutdown of the plant or portion of the plant resulting from a significant event and/or violation of a law, regulation, or a license/certificate condition.

2. A major condition or significant event not considered in the license/certificate that requires immediate remedial action.

3. A major condition or significant event that seriously compromises the ability of a safety system to perform its designated function that requires immediate remedial action to prevent a criticality, radiological or chemical process hazard.

IV. ***For Medical Licensees.***

A medical misadministration that:

(a) Results in a dose that is (1) equal to or greater than 1 gray (Gy) (100 rad) to a major portion of the bone marrow, to the lens of the eye, or to the gonads, <u>or</u> (2) equal to or greater than 10 Gy (1000 rad) to any other organ; and

(b) Represents either (1) a dose or dosage that is at least 50 percent greater than that prescribed in a written directive <u>or</u> (2) a prescribed dose or dosage that (i) is the wrong radiopharmaceutical,[8] or (ii) is delivered by the wrong route of administration, or (iii) is delivered to the wrong treatment site, or (iv) is delivered by the wrong treatment mode, or (v) is from a leaking source(s).

[8] The wrong radiopharmaceutical as used in the AO criterion for medical misadministrations refers to any radiopharmaceutical other than the one listed in the written directive or in the clinical procedures manual.

New, revised:

V. ***Guidelines for "Other Events of Interest"***

The Commission may determine that events other than AOs may be of interest to Congress and the public and should be included in an Appendix to the AO report as Other Events of Interest. Guidelines for events to be included in the AO report for this purpose may include, but not necessarily be limited to, events that do not meet the AO criteria but that have been perceived by Congress or the public to be of high health and safety significance, have received significant media coverage, or have caused the NRC to increase its attention to or oversight of a program area, or a group of similar events that have resulted in licensed materials entering the public domain in an uncontrolled manner.[9]

* * * * * * * * * *

7.4 Guidelines for AO Write-ups

All AO write-ups should be complete, up-to-date, and written using text that is understandable to non-technical readers. Please do not use **bold** or *italics* in writeups; use underline instead. Any special fonts will be added during the publishing stage by the NRC Technical Publications Specialist using the Kodak Ektaprint Electronic Publishing System.

NOTE: Agreement States may use INTERNET E-Mail capability to electronically send their AO information to STP via Internet using WordPerfect or an ASCII text file. NRC is currently using WordPerfect 8. The file may be attached to an e-mail transmission. The STP AO coordinator, Patricia Larkins, may be reached at (PML@NRC.GOV).

Margin notation - Include at the beginning of the report the Original Event Report Identification No., State ID-YR., - ITEM NO. (XX-00-01).

First paragraph - State the AO criteria for the event by citing the appropriate section of the AO criteria.

Date and Place - Provide the date the event occurred, the licensees name, and the city and State address of the licensee.

Nature and Probable Consequences - Briefly explain what happened and what were the circumstances. Provide the specific details of the event, i.e., exposure (where applicable), source, indicate the specific isotope(s), quantity, dose (where applicable), treatment plan (where applicable), equipment, manufacturer and Model No. Describe any immediate actions taken by the licensee or the State (confirmatory action

[9]Staff Requirements Memorandum, SECY-98-175, dated September 4, 1998.

letter, special inspection, enforcement conference, enforcement action(s), etc.). The write-up should answer where, when, how, why, and efforts to prevent recurrence.

For occupational, medical, or public overexposures identify whether the person was notified. For medical misadministrations, include the intended and actual treatment plan, identify any health effects. Mention if a medical consultant has been contracted to review the event. Include the consultant's conclusions and identify the effects on the patient. Never mention any health effects on a patient without attributing the statement to the licensee or medical consultant. Indicate whether the primary physician was notified.

NRC policy states that all documents must be published in dual units (Metric and English).

Cause or Causes - Self explanatory

Action(s) taken to prevent recurrence - Briefly explain what actions were taken to prevent recurrence by the licensee, and indicate whether or not the State was satisfied with the licensee's corrective actions. Were there any enforcement actions, penalties, etc.?

Last paragraph - Indicate the status by stating whether the AO is closed or remains open waiting for additional significant information from the Agreement State licensee. An item should only be identified as open if the State expects additional significant action may take place that will be covered in a follow-up report. The new information contained in the follow-up report should be provided to NRC for inclusion in the AO report under the section entitled "Update to Previously Reported AOs."

The following pages contain two sample AO write-ups.

Table 4. Sample Industrial Radiography AO Report

State ID-Yr.-No (XX-00-001)

Industrial radiography exposure at (**Name of facility, City, State**).

In accordance with the AO criteria an annual shallow-dose equivalent to the skin or extremities greater than 2500 mSv (250 rem) is considered an AO.

Date and Place: [**Date**]; [**Facility/Licensee**]; [**location**] City, State.

Exposure Source/Quantity Equipment/Device (Manuf./Model #)

Nature and Probable Consequences: A radiography trainer (#2) received an extremity exposure of at least 500 rem to the left-hand thumb and index finger during a source disconnect involving a 96 curie iridium-192 radiography source, contained in the licensee's Gamma Century radiography camera. While radiographing welds on a 12 inch pipe line in a five foot deep ditch, the trainer began experiencing difficulty with the source exiting from and retracting into the camera. Survey meter readings indicated a source disconnect. Radiographer (#1) shielded the source in the guide tube with a one inch thick lead sheet while the radiographer helper (#2) roped off a larger area and stayed a distance from the source. The radiographer trainee (#2) (employee of the radiography manufacturer) asked the (**Licensee**) radiographer to notify the radiography company RSO, and indicate everything was under control. As the trainer disconnected the guide tube, the source assembly fell into the mud at the bottom of a ditch. While picking up the source assembly from the mud with channel lock pliers, the source slipped. He instinctively reached for and straightened the source assembly (pigtail) with his hand, apparently touching the source in the process. He placed the pigtail into the camera, intending to place the source capsule in first. He noticed the survey meter reading high, indicating the source was outside of the camera. Radiographer (#2) then removed the source from the camera and placed it under the lead sheet. He then secured the source in the shielded position. The company did not notify the Agency of the disconnect.

About 10 days later, the radiographer started experiencing discomfort in his left thumb and index finger and made several visits to a doctor for treatment. Approximately 30 days later the RSO and the radiographer reported the incident to the State. An Agency investigation found the radiographer's film badge read 1.06 rem whole body. An inspection of the camera was performed by the company RSO the day after the incident. The Licensee and the State Agency determined that the company had ordered

two model #22 pigtails and sources from (Manufacturer, City, State), for the Century radiography cameras, and the (Manufacturer) inadvertently sent an incorrect Model #23 pigtail instead of the two model #22's ordered. The two models appear similar, but the model #22 is manufactured with 1/8 inch aircraft cable and a 3/4 inch connector, and the model #23 is manufactured with teleflex cable, the same as the drive cable material, and a one inch connector. The radiography company assumed the two pigtails sent to them were model #22's. The #23 was mistakenly placed in the Gamma century camera and is apparently the cause of the disconnect. The Agency investigation determined that the trainer had received at least a 1500 rem exposure to the thumb and index finger of the left hand. The **(State)** Radiation Control Program, in which the manufacturer was licensed, was informed of the incident and investigated the manufacturer's **(Licensee)** error in sending the two different pigtails to the radiography company.

Cause or Causes - The manufacturer's mistaken delivery of a pigtail model number different than the one ordered and the radiography company's assumption that the pigtails they received were the models they ordered, resulted in a pigtail being used in a camera for which it was not manufactured. The disconnect resulted from the difference in the length of the connectors between the two models. Also, the radiographer attempted an unauthorized recovery of the disconnected source. The radiographer was not trained in source recovery and had no previous experience with source disconnects.

Actions Taken to Prevent Recurrence

Licensee - Actions will be given at the enforcement conference.

State Agency - The Licensee and radiographer were cited for violations of the **(State)** Regulations for Control of Radiation. The Licensee was cited for the extremity exposure, unauthorized retrieval of a disconnected source, failure to immediately notify the Agency of the incident, and failure to notify the Agency in writing within thirty days of the incident. The radiographer was cited for unauthorized retrieval of a disconnected source. The incident has been referred for escalated enforcement.

Status

This file is **(open\closed)** in **(State)**. The event will remain open for additional information from the State of **(State)**.

NOTE: Emphasis added **[bold]** to clarify specific information that should be included in the report

Table 5. Sample Medical AO Report

State ID-YR.-NO. (XX-00-002)	Radiopharmacy Medical Misadministration at (**Name of Facility, City, State**) location.
Criteria	In accordance with the AO criteria, administering a dose equal to or greater than 10 gray (Gy) (1000 rad) to any organ (other than a major portion of the bone marrow, the lens of the eye, or to the gonads) and, the administered dose or dosage is at least 50 percent greater than that prescribed in a written directive is considered an abnormal occurrence.
	Date and Place - [Date]; [Facility/Licensee], [City, State]
Procedure/dose (actual vs. intended)	Nature and Probable Consequences - a patient was prescribed a dose of 3.7 megabecquerel (MBq) (0.1 millicurie [mCi]) of Iodine-131 (I-131) for a thyroid scan and uptake procedure. However, the patient was administered a dosage of 262.7 MBq (7.1 mCi) of I-131. As a result the patients thyroid received a dose of about 9100 centiGray (cGy) (9100 rad) instead of the prescribe dose of 130Gy (130 rad).
Health effect to patient	Licensee stated that the administered dose of I-131 may induce a hypothyroid state requiring the patient to take thyroid hormone.
	Cause or causes - the wrong dosage was administered on the assumption that the patient was prescribed a whole body thyroid scan for a cancer metastatic disease evaluation.
	Actions taken To Prevent Recurrence
	Licensee - Procedures for scheduling a whole body scan for thyroid cancer and metastasis were revised to include a detailed patient preparation and history. The revised procedures required that the approving radiologist sign the Iodine-131 administration policy before ordering a radiopharmaceutical. The nuclear medicine technologist attended a continuing education program at a local hospital, which included a session on the effects of studies involving therapy dosages.
	State Agency - The State agency conducted numerous follow-up inspections to ensure that the licensee's actions taken to prevent recurrence had been implemented.
	This event is closed for the purpose of this report.

Appendix

Glossary

DPC The Document Processing Center (DPC) is an internal NRC automated document search and retrieval system, indexed by a unique identification (Accession) No. for use by the staff of the NRC.

EN The Event Notification (EN) system is an internal NRC automated event tracking system used by the NRC Operations Center to track information on incoming notifications of the occurrence of significant material events that have or may affect public health and safety. Significant material events are reported to the NRC Operations Center by NRC licensees, staff of the Agreement States, other Federal agencies, and the public. The EN's are published each work day through the Internet.

Gray Gray (Gy) is the SI unit of absorbed dose. One gray is equal to an absorbed dose of 1 joule/kilogram (100 rads).

Metric System The metric system is now included in all Federal documents. All event reports should include the dual system of Units (SI) in the following order. First use the International System of Units (SI) with the English System unit equivalent following in parentheses. Spell out the first time it appears, continue with an abbreviation, (see examples below). 1000 centiGray (cGy) (1000 rad) the first time, and continue with 1000 cGy (1000 rad). 50 millisieverts (mSv) (5 rem) 730 megabecquerel (MBQ) (20.4 mCi)

NMED The Nuclear Materials Events Database (NMED), maintained by NRC, is a historical collection of incidents and events that have occurred throughout the United States involving the use of radioactive material covered under the Atomic Energy Act. This excludes events occurring at nuclear power plants.

NRC Ops Center The NRC Operations Center in Rockville, Maryland, serves as the focal coordination point for communicating with NRC licensees, State agencies, and other Federal agencies about operating events in both the nuclear reactor and nuclear material industry. The Operations Center is staffed 24 hours a day by an NRC Headquarters Operations Officer (HOO), who is trained to receive, evaluate, and respond to events reported to the Operations Center.

PN Preliminary Notifications (PN) are brief summary reports of significant events issued by the NRC staff to notify the Commission of the occurrence of a significant event that appears to have health and safety significance or major public or media interest. PNs are based on information provided by State radiation control program staff. These reports are publicly available through Internet on NRC's external home page under PN Reports at (http//www.nrc.gov/OPA/pn).

RSAO The Regional State Agreements Officer (RSAO) is a designated staff member, in an NRC regional office, who serves as the point of contact for the region and the Office of State and Tribal Programs regarding Agreement State radiation control programs, and who participates in technical reviews of Agreement State radiation control programs.

Rad Rad is the special unit of absorbed dose. One rad is equal to an absorbed dose of 100 ergs/grams or 0.01 joule/kilogram (0.01 gray)

Rem Rem is the special unit of any of the quantities expressed as dose equivalent. The dose equivalent in rem. is equal to the absorbed dose in rads multiplied by the quality factor (1 rem = 0.01 sievert).

Sievert Sievert is the SI unit of any of the quantities expressed as dose equivalent. The dose equivalent in sieverts is equal to the absorbed dose in grays multiplied by the quality factor (1 Sv = 100 rem.).

References

The following is a list of NRC manuals and procedures that contain additional information on event response and AOs. Additionally information is provided on the NRC Region contact for Agreement State issues, the Federal Radiological Emergency Response Plan (FRERP), the Federal Bureau of Investigations (FBI) expansion into byproduct material, and the Radiation Emergency Assistance Center/Training Site (REACTS) along with a telephone number.

NRC Policy

June 30, 1997 Staff Requirements Memorandum, Procedures for *Statement of Principles and Policy for the Agreement State Program and Policy Statement on Adequacy and Compatibility of Agreement State Programs.*

NRC Management Directives

8.1	Abnormal Occurrence Reporting Procedures
8.10	NRC Medical Event Assessment Program

NRC Inspection Manual (Series 1300, Incident Response)

1300	Incident Response Actions - Responsibility and Authority (84-080)
1301	Response to Non-Emergency Incidents Involving Radioactive Material (96-022)
1302	Action Levels for Radiation Exposures and Contamination Associated with Material Events Involving Members of the Public (94-004)
1303	Requesting Emergency Acceptance of Radioactive Material by the U.S. Department of Energy (DOE) (95-009)
1330	Response to Transportation Accidents Involving Radioactive Materials (84-22)
1360	Use of Physician and Scientific Consultants in the Medical Consultant Program (94-013)

NRC Inspection Procedures Manual (Series 8700, Material Safety Inspection)

87103	Inspection of Materials Licensees Involved in an Incident Bankruptcy Filing (97-008)

NRC Emergency Response Manuals

NUREG/BR-0230	Response Coordination Manual - Contains procedures for requesting Federal assistance during an emergency.
NUREG/BR-0150	Contains procedures for assessing the consequences of an emergency.

STP Procedures

SA-100	Implementation of the Integrated Materials Performance Evaluation Program
SA-200	Compatibility Categories and Health and Safety Identification for NRC Regulations and Other Program Elements

Event Notification and Response

FBI A recent revision to Section 831 of Chapter 39 of Title 18 of the U.S. Code regarding criminal activity, includes a significant expansion of Federal Bureau of Investigation jurisdiction to initiate criminal investigations and pursue prosecutions when radioactive materials are involved. In instances involving the suspected criminal misuse of nuclear material and byproduct material, your notification of the FBI is warranted. However, the U.S. Attorney's Office and the FBI will determine whether or not a criminal investigation is to be conducted by the FBI or deferred to State or local authorities for investigation and prosecution. The Commission also requests that Agreement States inform NRC of reports of events involving theft or terrorist activities warranting FBI notification.

FRERP The Commission is the lead Federal agency (LFA) for response to any event involving NRC and Agreement State-licensed Atomic Energy Act material under the Federal Radiological Emergency Response Plan (FRERP), which includes other Federal agencies, i.e., Department of Energy (DOE), Environmental Protection Agency (EPA), Federal Emergency Response Administration (FEMA). FRERP covers any peacetime radiological emergency that has actual, potential or perceived radiological consequences within the United States. The FRERP is reproduced in Section V of NUREG/BR-0230.

DOT/NRC The National Response Center is a Department of Transportation, Coast Guard service that serves as a national point of contact for reporting all oil, chemical, non-AEA radiological, biological, and etiological discharges into the environment anywhere in the United States and its territories. In addition to gathering and distributing spill data for Federal On-Scene Coordinators and serving as the communications and operations center for the National Response Team, the Center maintains agreements with a variety of federal entities to make additional notifications regarding incidents meeting established trigger criteria. The Center maintains a 24 hour call line at 1-800-424-8802. The Center's Website address is: www.nrc.uscg.mil/.

REACTS The Radiation Emergency Assistance Center/Training Site (REACTS), is a Department of Energy (DOE) resource headquartered in Oak Ridge, Tennessee, telephone (865) 576-1005. REACTS is available 24 hours a day to provide medical and radiological assistance either from the REACTS facility or the accident site. Additionally, REACTS maintains a listing of other professionals throughout the country who are recognized as having highly specialized expertise and equipment to manage a particular area of concern.

AVAILABILITY OF REFERENCE MATERIAL
NRC documents: Event Notifications, Preliminary Notifications, Inspection Manuals and Procedures, NUREG Series technical reports, Regulatory Guides, etc., are available at the NRC external Website under References at: http://www.nrc.gov/NRC/reference.html. The Office of State and Tribal Programs (STP) documents are available at the STP external Website at: http://www.hsrd.ornl.gov/nrc/.

(Cut out page for handy reference)

Event Reporting Schedule Reference Sheet

Reportable Event Notification	Reporting Schedule	Reporting Method
Events requiring 24 hours or less notification by Agreement State licensees (**significant** reportable event).	Agreement State should report to NRC within 24 hours of notification by an Agreement State licensee. (See Hndbk. Table 1, Sample FAX to Ops. Center) for sample initial information to be reported.	Initial information should be reported to NRC Operations Center* Telephone (voice): (301) 816-5100 or (301) 951-0550 NRC Operations Center FAX # (301) 816-5151
Events requiring greater than 24 hour notification by Agreement State licensees (e.g., **30-60 days**) and follow-up reports.	Agreement State should provided 30-60 day notification and any follow-up reports to NRC-NMED on a monthly basis. NOTE: Licensee reports received within less than 30 days of the date of the monthly report may be included in the next month's report. See Section 3. "Minimum Basic Event Information for a Complete NMED Report" for sample information needed.	**Information may be reported by:** Email: DHUN@INEL.GOV Tel. 208-526-2741 Disk: INEEL Attn: Dante Huntsman P.O. Box 1625 Idaho Falls, ID 83415 Written: Director of STP US NRC Washington, DC 20555
Personal or sensitive information, e.g., names, personal address, social security #, should not be included in event descriptions.		
***The NRC Operations Center staff will promptly notify the appropriate Region Duty Officer (RDO) and Headquarters staff of Agreement State events. Therefore, no separate notification to other NRC staff by an Agreement State is necessary.**		

EVENT LOG

Contact

Name:	Title:
Organization:	Phone:
Date:	Time:

Licensee Information

Licensee Name	License Number & State	License type

Event (additional room on back)

1. Event Description (fire, spill, etc.):

2. Location (city, milepost, highway):

3. Injuries & disposition:

4. Readings taken & Instrument used:

5. Other hazards present:

6. Other agencies present or notified:

Material

Isotope	UN ID #	Form (solid, liquid, gas)	Labels	Activity/ Concentration	Size/Quantity (volume/weight)

Actions Taken (additional room on back)

SIGNATURE	DATE

ATTACHMENT

8

DRC - MEDICAL MISADMINISTRATION REPORT
November 2001

MEDICAL MISADMINISTRATION REPORT

DRC-032
11/01

TO:	FROM: *(License No., Name, Address, Phone)*
William J. Sinclair, Director Utah Division of Radiation Control 168 North 1950 West P.O. Box 144850 Salt Lake City, Utah 84114-4850 (801)536-4250 Voice (801)533-4097 FAX	License No. U T -

Referring Physician:		Event date *(mm/dd/yy)*		Written Report date *(mm/dd/yy)*	

Phone Report Made	Y N	Physician Notified	Y N	Patient Notified	Y N	Event Record Filed	Y N

		Sodium Iodine, I-125 OR I-131, >30 microcuries
		Wrong patient
		Wrong radiopharmaceutical
		Administered dose differs from prescribed dose by > 20% and difference exceeds 30 microcuries
		Therapeutic radiopharmaceutical dose, other than I-125 OR I-131
		Wrong patient
		Wrong radiopharmaceutical
		Wrong route of administration
		Administered dose differs from prescribed dose by > 20%
		Stereotactic Radiosurgery (Gammaknife)
		Wrong patient
		Wrong treatment site
		Administered dose differs from prescribed dose by > 10%
		Teletherapy
		Wrong patient
		Wrong mode of treatment
		Wrong treatment site
		Administered dose differs from prescribed dose by >10% if there are 3 or fewer fractions prescribed; or when weekly calculated administered dose exceeds prescribed dose by > 30%; or when calculated total administered dose differs from prescribed dose by > 20%
		Brachytherapy
		Wrong patient
		Wrong radionuclide
		Wrong treatment site
		Leaking source
		One or more sources not removed at end of treatment
		Calculated administered dose differs from prescribed dose by > 20%
		Diagnostic radiopharmaceutical dose, other than quantities that exceed 30 microcuries of I-125 OR I-131, or both, when the patient dose exceeds 5 rem effective dose equivalent or 50 rem organ dose and involves:
		Wrong patient
		Wrong radiopharmaceutical
		Wrong route of administration
		Administered dose differs from prescribed dosage

Instructions: Complete the form by identifying the type of medical misadministration you are reporting. Responses for a phone report, physician notification, patient notification, and event record filing may be a yes or no response. On the reverse side of this form, write an abstract of the misadministration. Include a brief description of the event; why the event occurred; the effect on the patient; actions taken to prevent recurrence; whether the patient or the patient's responsible relative or guardian was informed, and if not, why not; and if the patient was notified, what information was provided to the patient.

Signature		Date	

ABSTRACT

ATTACHMENT

9

Performance Evaluation Factors

Attachment 10

PERFORMANCE EVALUATION FACTORS (PEF'S)

PEF's are subjective factors that aid in identification of the potential for degraded radiation safety performacne; assist inspectors in focusing on causes for degraded radiation safety performance; confirm and document inspectors' conclusions about licensee's radiation safety performance.

Licensee: _____ License Number: _____

Check each appropriate performance indicator that applies when if items of noncompliance are identified:

List of Performance Indicators

Lack of senior management involvement with the radiation safety program and/or Radiation Safety Officer (RSO) oversight	( )Y ( )N
RSO too busy with other assignments	( )Y ( )N
Insufficient staffing	( )Y ( )N
Radiation Safety Committee fails to meet or functions inadequately	( )Y ( )N
Inadequate consulting services or inadequate audits	( )Y ( )N
Users not familiar with safety procedures or license conditions	( )Y ( )N
Excessive missed surveillances	( )Y ( )N
Lack of Audits	( )Y ( )N
RSO not separated from responsibility for production activities	( )Y ( )N
Repeated failure to correct violations identified by consultant or licensee	( )Y ( )N
Failure to implement adequate corrective actions on previous violations	( )Y ( )N
Inability to readily retrieve records and documentation pertaining to licensed program	( )Y ( )N
Reportable events/misadministrations since last inspection	( )Y ( )N
Numerous diagnostic misadministrations	( )Y ( )N
Numerous repeat violations	( )Y ( )N
Financial instability of licensee	( )Y ( )N
Frequent resignation of staff	( )Y ( )N
Inability to perform all required surveys, tests, audits, etc. on time	( )Y ( )N
Lack of training documentation	( )Y ( )N
Failure to assess the performance of personnel training	( )Y ( )N
Allegations/Investigations since last inspection	( )Y ( )N
Licensee not inventorying radioactive materials	( )Y ( )N
Lack of structure to identify staff responsibilities	( )Y ( )N
Company subject to name change, developed into subsidiary, or transferred	( )Y ( )N
Failure to provide training to individuals before authorizing them to use licensed materials	( )Y ( )N
Radiation waste not being disposed of at same rate of generation	( )Y ( )N
Failure to retrain authorized users	( )Y ( )N
Inadequate RSO attention to radiation safety program	( )Y ( )N
Incomplete responses to previous identified violations	( )Y ( )N
No evidence licensee is capable of responding to radiological event	( )Y ( )N
Inadequate surveys	( )Y ( )N
RSO spends insufficient time at facility	( )Y ( )N
Identified violations similar to those previously identified	( )Y ( )N
Licensee not familiar with safety procedures, license requirements, URCR, or DOT regulations	( )Y ( )N

COMMENTS: _____

_____

PERFORMANCE INDICATORS
Page 2

Evaluation of Performance Indicators

Number of Performance Indicators identified: _____

Inspectors level of concern in licensee's potential for degraded safety performance:

____	No Concern	(< 2 PEF's)
____	Concern	(≥ 2 PEF's)
____	Significant Concern	(≥ 3 PEF's)
____	Great Concern	(≥ 4 PEF's)

Follow-up Actions Taken

(The type of follow-up action is at the discretion of the inspector.)

____ None

____ Telephone Contacts

____ "Management paragraph"[1] added to Notice of Violation cover letter

____ Meeting with licensee management

____ Special inspection, tailored to a particular aspect(s) of the licensee's radiation safety program

____ Early follow-up inspection

____ Confirmatory action letters

____ Other

(1) *The Division of Radiation Control is (concerned, significantly concerned or greatly concerned) with the implementation of your program in the area of management control in that your corrective actions were not effective and resulted in the recurrence of violation(s). Consequently, your required response to this letter should describe those specific actions planned or taken to improve the effectiveness of the management control of your licensed operations, with particular emphasis on measures currently being taken to prevent further violations.*

APPENDIX III

INSPECTION OF AGREEMENT STATE LICENSEES

A. PURPOSE

Policy and guidelines for performing inspections of Agreement State licensees working under reciprocity.

B. INSPECTION

The regional office(s) that have Nuclear Regulatory Commission jurisdiction in the area(s) in which the Agreement State licensees will operate shall take the following action:

1. FREQUENCY

Inspections of Agreement State licensees operating under the general license in 10 CFR 150.20 should be conducted using the same provisions used for equivalent NRC-licensed activities, except as specifically defined in this chapter. These provisions include, but are not limited to, inspection processes and inspection reports as defined in NRC Manual Chapter 2800 (MC 2800). The inspection frequencies for reciprocity licensees are not subject to the provisions in MC 2800 and are not to be extended for good licensee performance.

The percentage of reciprocity licensees to be inspected each year by program code and priority should be as follows with priorities 1 through 3 as Core Inspections and the remaining priorities as non-Core Inspections:

Priority 1 program codes -	50 percent of licensees inspected each year

100 percent of all service licensees who perform teletherapy and panoramic irradiator source installations, changes, and removals are also to be inspected each year.

Priority 2 program codes -	50 percent of licensees inspected each year
Priority 3 program codes -	30 percent of licensees inspected each year
Priority 4 program codes -	25 percent of licensees inspected each year
All other program codes -	10 percent of licensees inspected each year

NOTE: The percentages of inspections of reciprocity licensees are based on the number of initial NRC Form 241 requests received for processing by each regional office.

NOTE: In cases where a licensee performs reciprocity activities in several regions. the region with the first opportunity to inspect the licensee at a work site or the home office should do so. The completed inspection should be recorded as a completion for the inspecting region. The inspecting region should notify the regional office responsible for the area in which the Agreement State licensee is located.

2. LOCATION

Inspections of Agreement State licensees operating under reciprocity in areas of NRC jurisdiction pose many difficulties such as short lead time and logistics. Therefore. to meet NRC's inspection goal. the following inspection scenarios. in decreasing preference from option a. to option d. should be followed for the inspection of reciprocity activities:

a. Conduct unannounced inspections of actual field work locations.

b. Conduct announced inspections of actual field work locations.

c. Conduct unannounced inspections of the licensee's home office after completion of reciprocity activities (if unable to inspect actual field work location) and after notifying the Agreement State.

d. Conduct announced inspections of the licensee's home office after completion of reciprocity activities (if unable to inspect actual field work location) and after notifying the Agreement State.

C. INSPECTION REPORTS AND ENFORCEMENT ACTION

1. Field notes (unless escalated enforcement action is anticipated) shall be prepared for all inspections of Agreement State licensee activities. The inspecting region should enter the inspection documentation into the Inspection Followup System. and enter any pertinent information (as described in the Reciprocity Tracking system (RTS) Users Manual) about inspections and escalated enforcement actions into the RTS.

Note: For assist inspections. follow the procedures in MC 2800.

Note: Inspections of the licensee's home office should be entered into the first entry for the licensee with one entry per inspection.

2. The official record copy of the inspection documentation with the authorized NRC Form 241 shall be assigned the appropriate Regulatory Information Distribution System (RIDS) code and sent to NUDOCS/RIDS for processing.

3. "General Policy and Procedure for NRC Enforcement Actions." NUREG-1600. shall be used as the policy and criteria for taking enforcement actions against the licensee.

4. Copies of the enforcement correspondence shall be sent to:

   a. The Agreement State authority issuing the license under which the Agreement State licensee is operating:

   b. The NRC regional office in which the Agreement State is located:

   c. Other distribution in accordance with existing procedures.

5. Obtain the next available inspection report number from the Inspection Report Tracking System and record it in the comment field in RTS.

END

POLICY ON INSPECTION REVIEWS

1. Written field reports will be used to outline the scope of a radiation safety inspection. Inspectors will use field reports to document observations and any apparent violations of applicable requirements. Compliance History (summary of violations since the initial inspection) will also accompany the report as well as be updated in the database. A routing sheet (see attachment) with the inspector's and peer reviewer's comments as well as their signature and date will be entered on the routing sheet.

2. Each inspection report will be reviewed by a second inspector before being submitted for the Sections Manager's signature and subsequent filing.

3. The Section Manager will maintain a log of completed inspections and shall perform a management review of approximately every tenth inspection.

4. Supervisory personnel will accompany each inspector on at least on inspection per year.

INSPECTION ROUTING SHEET

Licensee: _____ License #: UT _____

Insp. Type: _____ Supvsr Accomp: _____ **DATE**

1. Conducted by: _____
2. Prepared by: _____
3. Reviewed by: CLARK GWYN JULIE PHILIP _____

Reviewer's Comments: _____

_____

_____

_____

Next Inspection: Next Insp. Type:

SUPERVISORY REVIEW: INSPECTIONS AND INCIDENTS

Conducted by: _____ Date: _____

Y N N/A Opening with management
Y N N/A Operations observed
Y N N/A Non-compliance recorded
Y N N/A NOV Letter drafted: Non-compliance correct
Y N N/A Posting/Labeling reviewed
Y N N/A Leak Test dates reviewed
Y N N/A Dosimetry reviewed
Y N N/A Radioactive materials inventory reviewed
Y N N/A Bioassay review adequate
Y N N/A Records review adequate [ ] slice included
Y N N/A Quality assurance reviewed
Y N N/A Radiation Safety Committee meetings reviewed
Y N N/A Procedures reviewed
Y N N/A Instruments adequate for scope of program
Y N N/A Wipes and surveys adequate
Y N N/A Instrumentation and procedures adequate
Y N N/A Training adequate
Y N N/A Instrumentation calibration adequate and timely
Y N N/A ALARA being practiced
Y N N/A Inspectors comments and recommendations in letter
Y N N/A _____
Y N N/A _____

General Statement of Policy and Procedure For DRC Enforcement Actions

- Preface
- I. Introduction and Purpose
- II. Statutory Authority And Procedural Framework
  - *A. Statutory Authority*
  - *B. Procedural Framework*
- III. Responsibilities
- IV. Severity of Violations
  - *A. Aggregation of Violations*
  - *B. Repetitive Violations*
  - *C. Willful Violations*
  - *D. Violations of Reporting Requirements*
- V. Predecisional Enforcement Conferences
- VI. Enforcement Actions
  - *A. Notice of Violation*
  - *B. Civil Penalty*
    - *1. Base Civil Penalty*
    - *2. Civil Penalty Assessment*
      - *a. Initial Escalated Action*
      - *b. Credit for Actions Related to Identification*
      - *c. Credit for Prompt and Comprehensive Corrective Action*
      - *d. Exercise of Discretion*
  - *C. Orders*
  - *D. Related Administrative Actions*
- VII. Exercise of Discretion
  - *A. Escalation of Enforcement Sanctions*
    - *1. Civil Penalties.*
    - *2. Orders.*
    - *3. Assessment of Civil Penalties for Continuing Violations.*
  - *B. Mitigation of Enforcement Sanctions*
    - *1. Licensee-Identified Severity Level IV Violations.*
    - *2. Violations Identified During Extended Shutdowns or Work Stoppages.*
    - *3. Violations Involving Old Design Issues.*
    - *4. Violations Identified Due to Previous Enforcement Action.*
    - *5. Violations Involving Special Circumstances.*
  - *C. Exercise of Discretion for an Operating Facility*
- VIII. Public Disclosure of Enforcement Actions
- IX. Reopening Closed Enforcement Actions
- Appendix A: Safety and Compliance
- Appendix B: Enforcement Examples

Preface

The following statement of general policy and procedure explains the enforcement policy and procedures of the Division of Radiation Control (DRC) and the DRC staff (staff) in initiating enforcement actions, and of the Executive Secretary of the Utah Radiation Control Board in reviewing these actions. This statement is applicable to enforcement in matters involving the radiological health and safety of the public, including employees' health and safety and the environment. The Executive Secretary may deviate from this statement of policy and procedure as appropriate under the circumstances of a particular case.

I. Introduction and Purpose

The purpose of the DRC enforcement program is to support the DRC's overall safety mission in protecting the public and the environment. Consistent with that purpose, enforcement action should be used:

As a deterrent to emphasize the importance of compliance with requirements, and

To encourage prompt identification and prompt, comprehensive correction of violations.

Consistent with the purpose of this program, prompt and vigorous enforcement action will be taken when dealing with licensees, who do not achieve the necessary meticulous attention to detail and the high standard of compliance which the DRC expects.[1] Each enforcement action is dependent on the circumstances of the case and requires the exercise of discretion after consideration of this enforcement policy. In no case, however, will licensees who cannot achieve and maintain adequate levels of safety be permitted to conduct licensed activities.

For purposes of this policy statement, safety means avoiding undue risk, i.e., providing reasonable assurance of adequate protection for the public in connection with the use of radioactive materials. Compliance means meeting regulatory requirements. Appendix A to this policy statement describes the nexus between safety and compliance.

II. Statutory Authority and Procedural Framework

A. Statutory Authority

The DRC's enforcement jurisdiction is drawn from the Radiation Control Act of the Utah Code 1954, as amended. Section 19-3-108 of the Act authorizes the DRC to conduct inspections and investigations and to issue orders as may be necessary or desirable to protect health or to minimize danger to life or property. Section R313-14-15 of the Utah Administrative Code authorizes the DRC to revoke licenses under certain circumstances (e.g., for material false statements, in response to conditions that would have warranted refusal of a license on an original application, for a licensee's

failure to build or operate a facility in accordance with the terms of the permit or license, and for violation of a DRC rule). Section 19-3-109 authorizes the DRC to impose civil penalties not to exceed $5,000 per violation for the violation of certain specified licensing provisions of the Act, rules, orders, and license terms implementing these provisions, and for violations for which licenses can be revoked. Section 19-3-110 (2) authorizes the DRC to seek injunctive or other equitable relief for violation of regulatory requirements.

B. Procedural Framework

R313-14 of DRC's rules sets forth the procedures the DRC uses in exercising its enforcement authority. R313-14-15 sets forth the procedures for issuing notices of violation.

The procedure to be used in assessing civil penalties is set forth in R313-14-15. This rule provides that the civil penalty process is initiated by issuing a Notice of Violation and Proposed Imposition of a Civil Penalty. The licensee or other person is provided an opportunity to contest in writing the proposed imposition of a civil penalty. After evaluation of the response, the civil penalty may be mitigated, remitted, or imposed. An opportunity is provided for a hearing if a civil penalty is imposed. If a civil penalty is not paid following a hearing or if a hearing is not requested, the matter may be referred to the Utah Attorney General to institute a civil action.

Information concerning an order to institute a proceeding to modify, suspend, or revoke a license or to take other action against a licensee or other person subject to the jurisdiction of the Executive Secretary is set forth in R313-14-15. The licensee or any other person adversely affected by the order may request a hearing. The DRC is authorized to make orders immediately effective if required to protect the public health, safety, or interest, or if the violation is willful. In accordance with R313-14-15 (5) a Demand for Information (Demand) may be issued to a licensee or other person subject to the Executive Secretary's jurisdiction for the purpose of determining whether an order or other enforcement action should be issued. The Demand does not provide hearing rights, as only information is being sought. A licensee must answer a Demand.

III. Responsibilities

The Executive Secretary has been delegated the authority to approve or issue all escalated enforcement actions.[2]

In recognition that the regulation of nuclear activities in many cases does not lend itself to a mechanistic treatment, judgment and discretion must be exercised in determining the severity levels of the violations and the appropriate enforcement sanctions, including the decision to issue a Notice of Violation, or to propose or impose a civil penalty and the amount of this penalty, after considering the general principles of this statement of policy and the technical and regulatory significance of the violations and the surrounding circumstances.

With consultation or notification of the Executive Secretary, the DRC staff may depart, where

warranted in the public's interest, from this policy as provided in Section VII, "Exercise of Enforcement Discretion." The Executive Secretary shall approve all enforcement actions involving civil penalties or orders. The Executive will be consulted prior to taking action in the following situations:

(1) An action affecting a licensee's operation that requires balancing the public health and safety implications of not operating with the potential radiological or other hazards associated with continued operation;

(2) Any proposed enforcement action that involves a Severity Level I violation; and

(3) Any proposed enforcement action on which the Executive Secretary asks to be consulted.

IV. Severity of Violations

Regulatory requirements[3] have varying degrees of safety, or environmental significance. Therefore, the relative importance of each violation, including both the technical significance and the regulatory significance, is evaluated as the first step in the enforcement process. In considering the significance of a violation, the staff considers the technical significance, i.e., actual and potential consequences, and the regulatory significance. In evaluating the technical significance, risk is an appropriate consideration.

Consequently, for purposes of formal enforcement action, violations are normally categorized in terms of five levels of severity to show their relative importance. Severity Level I has been assigned to violations that are the most significant and Severity Level V violations are the least significant. Severity Level I and II violations are of very significant regulatory concern. In general, violations that are included in these severity categories involve actual or high potential impact on the public. Severity Level III violations are cause for significant regulatory concern. Severity Level IV violations are less serious but are of more than minor concern; i.e., if left uncorrected, they could lead to a more serious concern.

The Executive Secretary recognizes that there are other violations of minor safety or environmental concern which are below the level of significance of Severity Level IV violations. These minor violations are assigned to Severity Level V. To the extent such violations are described, they will be noted as violations of minor significance.

Appendix B provides examples and serves as guidance in determining the appropriate severity level for violations. However, the examples are neither exhaustive nor controlling. In addition, these examples do not create new requirements. Each is designed to illustrate the significance that the DRC places on a particular type of violation of DRC requirements. Each of the examples is predicated on a violation of a regulatory requirement.

The DRC reviews each case being considered for enforcement action on its own merits to ensure that the severity of a violation is characterized at the level best suited to the significance of the particular violation. In some cases, special circumstances may warrant an adjustment to the severity level categorization.

A. Aggregation of Violations

A group of Severity Level IV violations may be evaluated in the aggregate and assigned a single, increased severity level, thereby resulting in a Severity Level III problem, if the violations have the same underlying cause or programmatic deficiencies, or the violations contributed to or were unavoidable consequences of the underlying problem. Normally, Severity Level II and III violations are not aggregated into a higher severity level.

The purpose of aggregating violations is to focus the licensee's attention on the fundamental underlying causes for which enforcement action appears warranted and to reflect the fact that several violations with a common cause may be more significant collectively than individually and may therefore, warrant a more substantial enforcement action.

B. Repetitive Violations

The severity level of a Severity Level IV violation may be increased to Severity Level III, if the violation can be considered a repetitive violation.[4] The purpose of escalating the severity level of a repetitive violation is to acknowledge the added significance of the situation based on the licensee's failure to implement effective corrective action for the previous violation. The decision to escalate the severity level of a repetitive violation will depend on the circumstances, such as, but not limited to, the number of times the violation has occurred, the similarity of the violations and their root causes, the adequacy of previous corrective actions, the period of time between the violations, and the significance of the violations.

C. Willful Violations

Willful violations are by definition of particular concern to the Executive Secretary because the State's regulatory program is based on licensees acting with integrity and communicating with candor. Willful violations cannot be tolerated by either the Executive Secretary or a licensee. Licensees are expected to take significant remedial action in responding to willful violations commensurate with the circumstances such that it demonstrates the seriousness of the violation thereby creating a deterrent effect within the licensee's organization. Although removal of the person is not necessarily required, substantial disciplinary action is expected.

Therefore, the severity level of a violation may be increased if the circumstances surrounding the matter involve careless disregard of requirements, deception, or other indications of willfulness. The term "willfulness" as used in this policy embraces a spectrum of violations ranging from deliberate intent to violate or falsify to and including careless disregard for requirements. Willfulness does not include acts which do not rise to the level of careless disregard, e.g., inadvertent clerical errors in a document submitted to the DRC. In determining the specific severity level of a violation involving willfulness, consideration will be given to such factors as the position and responsibilities of the

person involved in the violation (e.g.,. licensee official[5] or non-supervisory employee), the significance of any underlying violation, the intent of the violator (i.e., careless disregard or deliberateness), and the economic or other advantage, if any, gained as a result of the violation. The relative weight given to each of these factors in arriving at the appropriate severity level will be dependent on the circumstances of the violation. However, if a licensee refuses to correct a minor violation within a reasonable time such that it willfully continues, the violation should be categorized at least at a Severity Level IV.

D. Violations of Reporting Requirements

The DRC expects licensees to provide complete, accurate, and timely information and reports. Accordingly, the severity level of a violation involving the failure to make a required report to the DRC will be based upon the significance of and the circumstances surrounding the matter that should have been reported. However, the severity level of an untimely report, in contrast to no report, may be reduced depending on the circumstances surrounding the matter. A licensee will not normally be cited for a failure to report a condition or event unless the licensee was actually aware of the condition or event that it failed to report. A licensee will, on the other hand, normally be cited for a failure to report a condition or event if the licensee knew of the information to be reported, but did not recognize that it was required to make a report.

V. Predecisional Enforcement Conferences

Whenever the DRC has learned of the existence of a potential violation for which escalated enforcement action appears to be warranted, the DRC may provide an opportunity for a predecisional enforcement conference with the licensee before taking enforcement action. The purpose of the conference is to obtain information that will assist the DRC in determining the appropriate enforcement action, such as: (1) a common understanding of facts, root causes and missed opportunities associated with the apparent violations, (2) a common understanding of corrective actions taken or planned, and (3) a common understanding of the significance of issues and the need for lasting comprehensive corrective action.

If the DRC concludes that it has sufficient information to make an informed enforcement decision, a conference will not normally be held. If a conference is not held, the licensee may be requested to provide a written response to describe the licensee's views on the apparent violations and their root causes and a description of planned or implemented corrective actions. However, if the DRC has sufficient information to conclude that a civil penalty is not warranted, it may proceed to issue an enforcement action without first obtaining the licensee's response.

During a predecisional enforcement conference, the licensee will be given an opportunity to provide information consistent with the purpose of the conference, including an explanation to the DRC of the immediate corrective actions (if any) that were taken following identification of the potential violation or nonconformance and the long-term comprehensive actions that were taken or will be taken to prevent recurrence. Licensees will be told when a meeting is a predecisional enforcement

conference.

A predecisional enforcement conference is a meeting between the DRC and the licensee. Conferences are normally held in the DRC offices and are normally open to public observation. Conferences will not normally be open to the public if the enforcement action being contemplated:

(1) Would be taken against an individual, or if the action, though not taken against an individual, turns on whether an individual has committed wrongdoing;

(2) Involves significant personnel failures where the DRC has requested that the individual(s) involved be present at the conference;

(3) Is based on the findings of a DRC Investigation report that has not been publicly disclosed; or

(4) Involves information which could be considered protected under the Government Records Access and Management Act;

In addition, conferences will not normally be open to the public if:

(5) The conference involves medical misadministrations or overexposures and the conference cannot be conducted without disclosing the exposed individual's name; or

(6) The conference will be conducted by telephone or the conference will be conducted at a relatively small licensee's facility.

Notwithstanding the above normal criteria for opening or closing conferences, they may either be open or closed to the public after balancing the benefit of the public's observation against the potential impact on the Executive Secretary's decision-making process in a particular case. The DRC will notify the licensee that the conference will be open to public observation and the DRC may issue a press release that a predecisional enforcement conference has been scheduled and that it is open to public observation.

The public attending open conferences may observe but may not participate in the conference. It is noted that the purpose of conducting open conferences is not to maximize public attendance, but rather to provide the public with opportunities to be informed of DRC activities consistent with the DRC's ability to exercise its regulatory and safety responsibilities. Therefore, members of the public will be allowed access to the DRC offices to attend open enforcement conferences. These procedures provide that visitors may be subject to personnel screening, that signs, banners, posters, etc., not larger than 18" be permitted, and that disruptive persons may be removed. The open conference will be terminated if disruption interferes with a successful conference. DRC's Predecisional Enforcement Conferences (whether open or closed) normally will be held at the DRC's offices and not in the vicinity of the licensee's facility.

For a case in which DRC staff finds that discrimination has occurred, the investigation report may be made public, subject to withholding certain information (i.e., after appropriate redaction), in which case the associated predecisional enforcement conference will normally be open to public observation. In a conference where a particular individual is being considered potentially responsible for the discrimination, the conference will remain closed. In either case (i.e., whether the conference is open or closed), the employee or former employee who was the subject of the alleged discrimination (hereafter referred to as "complainant") will normally be provided an opportunity to participate in the predecisional enforcement conference with the licensee/employer. This participation will normally be in the form of a complainant statement and comment on the licensee's presentation, followed in turn by an opportunity for the licensee to respond to the complainant's presentation. In cases where the complainant is unable to attend in person, arrangements will be made for the complainant's participation by telephone or an opportunity given for the complainant to submit a written response to the licensee's presentation. If the licensee chooses to forego an enforcement conference and, instead, responds to the DRC's findings in writing, the complainant will be provided the opportunity to submit written comments on the licensee's response.

Members of the public attending open conferences will be reminded that (1) the apparent violations discussed at predecisional enforcement conferences are subject to further review and may be subject to change prior to any resulting enforcement action and (2) the statements of views or expressions of opinion made by DRC employees at predecisional enforcement conferences, or the lack thereof, are not intended to represent final determinations or beliefs.

When needed to protect the public health and safety, escalated enforcement action, such as the issuance of an immediately effective order, will be taken before the conference. In these cases, a conference may be held after the escalated enforcement action is taken.

VI. Enforcement Actions

This section describes the enforcement sanctions available to the DRC and specifies the conditions under which each may be used. The basic enforcement sanctions are Notices of Violation, civil penalties, and orders of various types. As discussed further in Section VI.D, related administrative actions such as Confirmatory Action Letters and Demands for Information are used to supplement the enforcement program. In selecting the enforcement sanctions or administrative actions, the DRC will consider enforcement actions taken by other Federal or State regulatory bodies having concurrent jurisdiction, such as in transportation matters.

Usually, whenever a violation of DRC requirements is identified, enforcement action is taken. The nature and extent of the enforcement action is intended to reflect the seriousness of the violation involved. For the vast majority of violations, a Notice of Violation is the normal action.

However, circumstances regarding the violation findings may warrant discretion being exercised such that the DRC refrains from issuing a Notice of Violation or other enforcement action. (See

Section VII.B, "Mitigation of Enforcement Sanctions.")

A. Notice of Violation

A Notice of Violation is a written notice setting forth one or more violations of a legally binding requirement. The Notice of Violation normally requires the recipient to provide a written statement describing (1) the reasons for the violation or, if contested, the basis for disputing the violation; (2) corrective steps that have been taken and the results achieved; (3) corrective steps that will be taken to prevent recurrence; and (4) the date when full compliance will be achieved. The DRC may waive all or portions of a written response to the extent relevant information has already been provided to the DRC in writing or documented in a DRC inspection report. The DRC may require responses to Notices of Violation to be under oath. Normally, responses under oath will be required only in connection with Severity Level I, II, or III violations or orders.

The DRC uses the Notice of Violation as the usual method for formalizing the existence of a violation. Issuance of a Notice of Violation is normally the only enforcement action taken, except in cases where the criteria for issuance of civil penalties and orders, as set forth in Sections VI.B and VI.C, respectively, are met.

B. Civil Penalty

A civil penalty is a monetary penalty that may be imposed for violation of (1) certain specified licensing provisions of the Act or Administrative Rules or orders; or (2) any requirement for which a license may be revoked. Civil penalties are designed to deter future violations both by the involved licensee as well as by other licensees conducting similar activities and to emphasize the need for licensees to identify violations and take prompt comprehensive corrective action.

Civil penalties may be appropriate for Severity Level IV violations and are considered for Severity Level III violations. In addition, civil penalties will normally be assessed for Severity Level I and II violations.

Civil penalties are used to encourage prompt identification and prompt and comprehensive correction of violations, to emphasize compliance in a manner that deters future violations, and to serve to focus licensees' attention on violations of significant regulatory concern.

Although management involvement, direct or indirect, in a violation may lead to an increase in the civil penalty, the lack of management involvement may not be used to mitigate a civil penalty. Allowing mitigation in the latter case could encourage the lack of management involvement in licensed activities and a decrease in protection of the public health and safety.

1. Base Civil Penalty

The DRC imposes different levels of penalties for different severity level violations. Table 1 shows the base civil penalties for radioactive materials programs. The structure of this table generally takes into account the gravity of the violation as a primary consideration and the ability to pay as a secondary consideration. Regarding

the secondary factor of ability of licensees to pay the civil penalties, it is not the DRC's intention that the economic impact of a civil penalty be so severe that it puts a licensee out of business (orders, rather than civil penalties, are used when the intent is to suspend or terminate licensed activities) or adversely affects a licensee's ability to safely conduct licensed activities. The deterrent effect of civil penalties is best served when the amounts of the penalties take into account a licensee's ability to pay. In determining the amount of civil penalties for licensees for whom the table does not reflect the ability to pay or the gravity of the violation, the DRC will consider as necessary an increase or decrease on a case-by-case basis. Normally, if a licensee can demonstrate financial hardship, the DRC will consider payments over time, including interest, rather than reducing the amount of the civil penalty. However, where a licensee claims financial hardship, the licensee will normally be required to address why it has sufficient resources to safely conduct licensed activities and pay license and inspection fees.

TABLE 1

Severity Level I	$5,000
Severity Level II	$4,000
Severity Level III	$2,500
Severity Level IV	$ 750
Severity Level V	$ 250

2. *Civil Penalty Assessment*

In an effort to (1) emphasize the importance of adherence to requirements and (2) reinforce prompt self-identification of problems and root causes and prompt and comprehensive correction of violations, the DRC reviews each proposed civil penalty on its own merits and, after considering all relevant circumstances, may adjust the base civil penalties shown in Table 1 as described below.

The civil penalty assessment process considers four decisional points: (a) whether the licensee has had any previous escalated enforcement action during the past 2 years or past 2 inspections, whichever is longer; (b) whether the licensee should be given credit for actions related to identification; (c) whether the licensee's corrective actions are prompt and comprehensive; and (d) whether, in view of all the circumstances, the matter in question requires the exercise of discretion. Although each of these decisional points may have several associated considerations for any given case, the outcome of the assessment process for each violation, absent the exercise of discretion, is limited to one of the following three results: no civil penalty, a base civil penalty, or a base civil penalty escalated by 50%. The flow chart presented below is a graphic representation of the civil penalty assessment process.

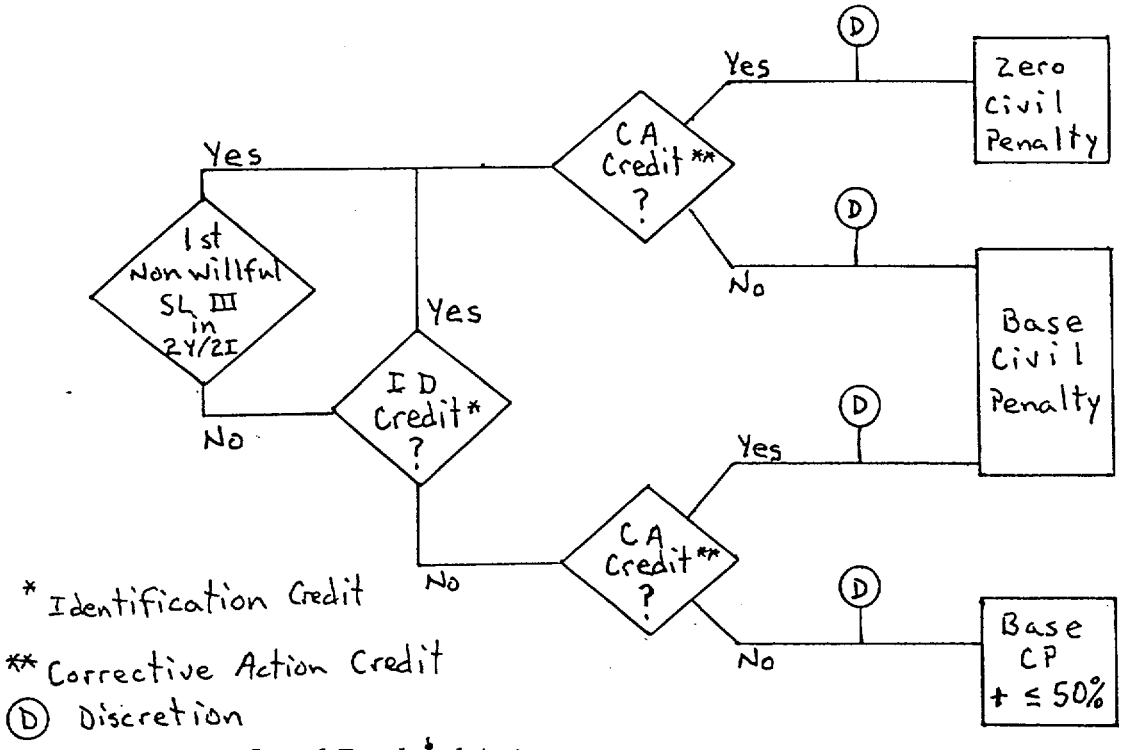

a. *Initial Escalated Action*

When the DRC determines that a non-willful Severity Level IV violation has occurred, and the licensee has not had <u>any</u> previous escalated actions during the past 2 years or 2 inspections, whichever is longer, the DRC will consider whether the licensee's corrective action for the present violation is reasonably prompt and comprehensive (see the discussion under Section VI.B.2.c, below). Using 2 years as the basis for assessment is expected to cover most situations, but considering a slightly longer or shorter period might be warranted based on the circumstances of a particular case. The starting point of this period should be considered the date when the licensee was put on notice of the need to take corrective action. For a licensee-identified violation or an event, this would be when the licensee is aware that a problem or violation exists requiring corrective action. For an DRC-identified violation, the starting point would be when the DRC puts the licensee on notice, which could be during the inspection, at the inspection exit meeting, or as part of post-inspection communication.

If the corrective action is judged to be prompt and comprehensive, a Notice of Violation normally should be issued with no associated civil penalty. If the corrective action is judged to be less than prompt and comprehensive, the Notice of Violation normally should be issued with a base civil penalty.

b. *Credit for Actions Related to Identification*

(1) If a Severity Level I or II violation or a willful Severity Level III violation has occurred--or if, during the past 2 years or 2 inspections, whichever is longer, the licensee has been issued at least one other escalated action--the civil penalty assessment should normally

consider the factor of identification in addition to corrective action (see the discussion under Section VI.B.2.c, below). As to identification, the DRC should consider whether the licensee should be given credit for actions related to identification.

In each case, the decision should be focused on identification of the problem requiring corrective action. In other words, although giving credit for *Identification* and *Corrective Action* should be separate decisions, the concept of *Identification* presumes that the identifier recognizes the existence of a problem, and understands that corrective action is needed. The decision on *Identification* requires considering all the circumstances of identification including:

(i) Whether the problem requiring corrective action was DRC-identified, licensee-identified, or revealed through an event[6];

(ii) Whether prior opportunities existed to identify the problem requiring corrective action, and if so, the age and number of those opportunities;

(iii) Whether the problem was revealed as the result of a licensee self-monitoring effort, such as conducting an audit, a test, a surveillance, a design review, or troubleshooting;

(iv) For a problem revealed through an event, the ease of discovery, and the degree of licensee initiative in identifying the root cause of the problem and any associated violations;

(v) For DRC-identified issues, whether the licensee would likely have identified the issue in the same time-period if the DRC had not been involved;

(vi) For DRC-identified issues, whether the licensee should have identified the issue (and taken action) earlier; and

(vii) For cases in which the DRC identifies the overall problem requiring corrective action (e.g., a programmatic issue), the degree of licensee initiative or lack of initiative in identifying the problem or problems requiring corrective action.

(2) Although some cases may consider all of the above factors, the importance of each factor will vary based on the type of case as

discussed in the following general guidance:

(i) **Licensee-Identified.** When a problem requiring corrective action is licensee-identified (i.e., identified before the problem has resulted in an event), the DRC should normally give the licensee credit for actions related to identification, regardless of whether prior opportunities existed to identify the problem.

(ii) **Identified Through an Event.** When a problem requiring corrective action is identified through an event, the decision on whether to give the licensee credit for actions related to identification normally should consider the ease of discovery, whether the event occurred as the result of a licensee self-monitoring effort (i.e., whether the licensee was "looking for the problem"), the degree of licensee initiative in identifying the problem or problems requiring corrective action, and whether prior opportunities existed to identify the problem.

Any of these considerations may be overriding if particularly noteworthy or particularly egregious. For example, if the event occurred as the result of conducting a surveillance or similar self-monitoring effort (i.e., the licensee was looking for the problem), the licensee should normally be given credit for identification. As a second instance, even if the problem was easily discovered (e.g., revealed by a large spill of liquid), the DRC may choose to give credit because noteworthy licensee effort was exerted in ferreting out the root cause and associated violations, or simply because no prior opportunities (e.g., procedural cautions, post-maintenance testing, quality control failures, readily observable parameter trends, or repeated or locked-in annunciator warnings) existed to identify the problem.

(iii) **DRC-Identified.** When a problem requiring corrective action is DRC-identified, the decision on whether to give the licensee credit for actions related to *Identification* should normally be based on an additional question: should the licensee have reasonably identified the problem (and taken action) earlier?

In most cases, this reasoning may be based simply on the ease

of the DRC inspector's discovery (e.g., conducting a walk through survey, observing in the facility, performing a confirmatory DRC radiation survey, or finding a safety device out of service). In some cases, the licensee's missed opportunities to identify the problem might include a similar previous violation, DRC notices, internal audits, or readily observable trends.

If the DRC identifies the violation but concludes that, under the circumstances, the licensee's actions related to *Identification* were not unreasonable, the matter would be treated as licensee-identified for purposes of assessing the civil penalty. In such cases, the question of *Identification* credit shifts to whether the licensee should be penalized for DRC's identification of the problem.

(iv) **Mixed Identification**. For "mixed" identification situations (i.e., where multiple violations exist, some DRC-identified, some licensee-identified, or where the DRC prompted the licensee to take action that resulted in the identification of the violation), the DRC's evaluation should normally determine whether the licensee could reasonably have been expected to identify the violation in the DRC's absence. This determination should consider, among other things, the timing of the DRC's discovery, the information available to the licensee that caused the DRC concern, the specificity of the DRC's concern, the scope of the licensee's efforts, the level of licensee resources given to the investigation, and whether the DRC's path of analysis had been dismissed or was being pursued in parallel by the licensee.

In some cases, the licensee may have addressed the isolated symptoms of each violation (and may have identified the violations), but failed to recognize the common root cause and taken the necessary comprehensive action. Where this is true, the decision on whether to give licensee credit for actions related to *Identification* should focus on identification of *the problem requiring corrective action* (e.g., the programmatic breakdown). As such, depending on the chronology of the various violations, the earliest of the individual violations might be considered missed opportunities for the licensee to have identified the larger problem.

(v) **Missed Opportunities to Identify**. Missed opportunities include prior notifications or missed opportunities to identify or prevent violations such as (1) through normal surveillances, audits, or quality assurance (QA) activities; (2) through prior notice i.e., specific DRC notification; or (3) through other reasonable indication of a potential problem or violation, such as observations of employees, and failure to take effective corrective steps. It may include findings of the DRC or the licensee made at other facilities operated by the licensee where it is reasonable to expect the licensee to take action to identify or prevent similar problems at the facility subject to the enforcement action at issue. In assessing this factor, consideration will be given to, among other things, the opportunities available to discover the violation, the ease of discovery, the similarity between the violation and the notification, the period of time between when the violation occurred and when the notification was issued, the action taken (or planned) by the licensee in response to the notification, and the level of management review that the notification received (or should have received).

The evaluation of missed opportunities should normally depend on whether the information available to the licensee should reasonably have caused action that would have prevented the violation. Missed opportunities is normally not applied where the licensee appropriately reviewed the opportunity for application to its activities and reasonable action was either taken or planned to be taken within a reasonable time.

In some situations the missed opportunity is a violation in itself. In these cases, unless the missed opportunity is a Severity Level III violation in itself, the missed opportunity violation may be grouped with the other violations into a single Severity Level III "problem." However, if the missed opportunity is the *only* violation, then it should not normally be counted twice (i.e., both as the violation and as a missed opportunity--"double counting") unless the number of opportunities missed was particularly significant.

The timing of the missed opportunity should also be considered. While a rigid time-frame is unnecessary, a 2-year period should generally be considered for consistency in

implementation, as the period reflecting relatively current performance.

(3) When the DRC determines that the licensee should receive credit for actions related to *Identification*, the civil penalty assessment should normally result in either no civil penalty or a base civil penalty, based on whether *Corrective Action* is judged to be reasonably prompt and comprehensive. When the licensee is *not* given credit for actions related to *Identification*, the civil penalty assessment should normally result in a Notice of Violation with either a base civil penalty or a base civil penalty escalated by up to 50%, depending on the quality of *Corrective Action*, because the licensee's performance is clearly not acceptable.

c. *Credit for Prompt and Comprehensive Corrective Action*

The purpose of the *Corrective Action* factor is to encourage licensees to (1) take the immediate actions necessary upon discovery of a violation that will restore safety and compliance with the license, rule(s), or other requirement(s); and (2) develop and implement (in a timely manner) the lasting actions that will not only prevent recurrence of the violation at issue, but will be appropriately comprehensive, given the significance and complexity of the violation, to prevent occurrence of violations with similar root causes.

Regardless of other circumstances (e.g., past enforcement history, identification), the licensee's corrective actions should always be evaluated as part of the civil penalty assessment process. As a reflection of the importance given to this factor, a DRC judgment that the licensee's corrective action has not been prompt and comprehensive will always result in issuing at least a base civil penalty.

In assessing this factor, consideration will be given to the timeliness of the corrective action (including the promptness in developing the schedule for long term corrective action), the adequacy of the licensee's root cause analysis for the violation, and, given the significance and complexity of the issue, the comprehensiveness of the corrective action (i.e., whether the action is focused narrowly to the specific violation or broadly to the general area of concern). Even in cases when the DRC, at the time of the enforcement conference, identifies additional peripheral or minor corrective action still to be taken, the licensee may be given credit in this area, as long as the licensee's actions addressed the underlying root cause and are considered sufficient to prevent recurrence of the violation and similar violations.

Normally, the judgment of the adequacy of corrective actions will hinge on whether the DRC had to take action to focus the licensee's evaluative and corrective process in order to obtain comprehensive corrective action. This will normally be judged at the time of the predecisional enforcement conference (e.g., by outlining substantive additional areas where corrective action is needed). Earlier informal discussions between the licensee and DRC inspectors or management may result in improved corrective action, but should not normally be a basis to deny credit for *Corrective Action.* For cases in which the licensee does not get credit for actions related to *Identification* because the DRC identified the problem, the assessment of the licensee's corrective action should begin from the time when the DRC put the licensee on notice of the problem. Notwithstanding eventual good comprehensive corrective action, if immediate corrective action was not taken to restore safety and compliance once the violation was identified, corrective action would not be considered prompt and comprehensive.

d. *Exercise of Discretion*

As provided in Section VII, "Exercise of Discretion," discretion may be exercised by either escalating or mitigating the amount of the civil penalty determined after applying the civil penalty adjustment factors to ensure that the proposed civil penalty reflects the DRC's concern regarding the violation at issue and that it conveys the appropriate message to the licensee. However, in no instance will a civil penalty for any one violation exceed $5,000 per day.

C. Orders

An order is a written DRC directive to modify, suspend, or revoke a license; to cease and desist from a given practice or activity; or to take such other action as may be proper (see R313-14-15(3). Orders may also be issued in lieu of, or in addition to, civil penalties, as appropriate for Severity Level I, II, III, or IV violations. Orders may be issued as follows:

1. License Modification orders are issued when some change in licensee equipment, procedures, personnel, or management controls is necessary.

2. Suspension Orders may be used:
   (a) To remove a threat to the public health and safety, common defense and security, or the environment;

   (b) To stop facility construction when,
      (i) Further work could preclude or significantly hinder the identification or correction of an improperly constructed safety-related system or component; or
      (ii) The licensee's quality assurance program implementation is not

adequate to provide confidence that construction activities are being properly carried out;

(c) When the licensee has not responded adequately to other enforcement action;

(d) When the licensee interferes with the conduct of an inspection or investigation; or

(e) For any reason not mentioned above for which license revocation is legally authorized.

Suspensions may apply to all or part of the licensed activity. Ordinarily, a licensed activity is not suspended (nor is a suspension prolonged) for failure to comply with requirements where such failure is not willful and adequate corrective action has been taken.

3. Revocation Orders may be used:
   (a) When a licensee is unable or unwilling to comply with DRC requirements;

   (b) When a licensee refuses to correct a violation;

   (c) When licensee does not respond to a Notice of Violation where a response was required; or

   (d) When a licensee refuses to pay an applicable fee under the Utah Radiaiton Control rules.

4. Cease and Desist Orders may be used to stop an unauthorized activity that has continued after notification by the DRC that the activity is unauthorized.

Unless a separate response is warranted pursuant to R313-14-15 (1), a Notice of Violation need not be issued where an order is based on violations described in the order. The violations described in an order need not be categorized by severity level.

Orders are made effective immediately, without prior opportunity for hearing, whenever it is determined that the public health, interest, or safety so requires, or when the order is responding to a violation involving willfulness. Otherwise, a prior opportunity for a hearing on the order is afforded. For cases in which the DRC believes a basis could reasonably exist for not taking the action as proposed, the licensee will ordinarily be afforded an opportunity to show why the order should not be issued in the proposed manner by way of a Demand for Information.

D. Related Administrative Actions

In addition to the formal enforcement actions, Notices of Violation, civil penalties, and orders, the DRC also uses administrative actions, such as Bullitins, Information Notices, Confirmatory Action

Letters, and Demands for Information to supplement its enforcement program. The DRC expects licensees to adhere to any obligations and commitments resulting from these actions and will not hesitate to issue appropriate orders to ensure that these obligations and commitments are met.

1. Bulletins and Information Notices are written notificaitons to groups of licensees identifying specific problems and calling for or recommending specific actions on their part.

2. Confirmatory Action Letters are letters confirming a licensee's agreement to take certain actions to remove significant concerns about health and safety or the environment.

3. Demands for Information are demands for information from licensees or other persons for the purpose of enabling the DRC to determine whether an order or other enforcement action should be issued.

VII. Exercise of Discretion

Notwithstanding the normal guidance contained in this policy, as provided in Section III, "Responsibilities," the DRC may choose to exercise discretion and either escalate or mitigate enforcement sanctions within the Executive Secretary's authority to ensure that the resulting enforcement action appropriately reflects the level of DRC concern regarding the violation at issue and conveys the appropriate message to the licensee.

A. Escalation of Enforcement Sanctions

The DRC considers violations categorized at Severity Level I, II, or III to be of significant regulatory concern. If the application of the normal guidance in this policy does not result in an appropriate sanction, the DRC may apply its full enforcement authority where the action is warranted. DRC action may include (1) escalating civil penalties, (2) issuing appropriate orders, and (3) assessing civil penalties for continuing violations on a per day basis, up to the statutory limit of $5,000 per violation, per day.

1. ***Civil penalties.***
   Notwithstanding the outcome of the normal civil penalty assessment process addressed in Section VI.B, the DRC may exercise discretion by either proposing a civil penalty where application of the factors would otherwise result in zero penalty or by escalating the amount of the resulting civil penalty to ensure that the proposed civil penalty reflects the significance of the circumstances and conveys the appropriate regulatory message to the licensee. The Executive Secretary will be notified if the deviation in the amount of the civil penalty proposed under this discretion from the amount of the civil penalty assessed under the normal process is more than 50% higher than the base civil penalty shown in Table 1. Examples when this discretion should be considered include, but are not limited to the following:

(a) Problems categorized at Severity Level I or II;

(b) Overexposures, or releases of radiological material in excess of DRC requirements;

(c) Situations involving particularly poor licensee performance, or involving willfulness;

(d) Situations when the licensee's previous enforcement history has been particularly poor, or when the current violation is directly repetitive of an earlier violation;

(e) Situations when the violation results in a substantial increase in risk, including cases in which the duration of the violation has contributed to the substantial increase;

(f) Situations when the licensee made a conscious decision to be in noncompliance in order to obtain an economic benefit; or

(g) Cases involving the loss of a source. In addition, unless the licensee self-identifies and reports the loss to the DRC, these cases should normally result in a civil penalty in an amount at least in the order of the cost of an authorized disposal of the material or of the transfer of the material to an authorized recipient.

2. ***Orders.***
The DRC may, where necessary or desirable, issues orders in conjunction with or in lieu of civil penalties to achieve or formalize corrective actions and to deter further recurrence of serious violations.

3. ***Assessment of Civil Penalties for Continuing Violations.***
In order to recognize the added technical safety significance or regulatory significance for those cases where a very strong message is warranted for a significant violation that continues for more than one day, the DRC may exercise discretion and assess a separate violation and attendant civil penalty up to the statutory limit of $5,000 for each occurrence the violation continues. The DRC may exercise this discretion if a licensee was aware or clearly should have been aware of a violation, or if the licensee had an opportunity to identify and correct the violation but failed to do so.

B. Mitigation of Enforcement Sanctions

The DRC may exercise discretion and refrain from issuing a civil penalty and/or a Notice of Violation, if the outcome of the normal process described in Sections VI.A and VI.B does not result in a sanction consistent with an appropriate regulatory message. In addition, even if the DRC exercises this discretion, when the licensee failed to make a required report to the DRC, a separate enforcement action will normally be issued for the licensee's failure to make a required report. The approval of the Executive Secretary is required for exercising discretion of the type described in Section VII.B.1.b where a willful violation is involved, and of the types described in Sections VII.B.2 through VII.B.5. Examples when discretion should be considered for departing from the normal approach in Sections VI.A and VI.B include, but are not limited to the following:

1. *Licensee-Identified Severity Level IV Violations.*

   The DRC, with the approval of the Executive Secretary, may refrain from issuing a Notice of Violation for a Severity Level IV violation that is documented in an inspection report or official field notes and described therein as a Non-Cited Violation (NCV) provided that the documentation includes a brief description of the corrective action and that the violation meets all of the following criteria:

   (a) It was identified by the licensee;[7]

   (b) It was not a violation that could reasonably be expected to have been prevented by the licensee's corrective action for a previous violation or a previous licensee finding that occurred within the past 2 years of the inspection at issue, or the period within the last two inspections, whichever is longer;

   (c) It was or will be corrected within a reasonable time, by specific corrective action committed to by the licensee by the end of the inspection, including immediate corrective action and comprehensive corrective action to prevent recurrence;

   (d) It was not a willful violation or if it was a willful violation;

      (i) The information concerning the violation, if not required to be reported, was promptly provided to appropriate DRC personnel;

      (ii) The violation involved the acts of a low-level individual (and not a licensee official as defined in Section IV.C);

      (iii) The violation appears to be the isolated action of the employee without management involvement and the violation was not caused by lack of management oversight as evidenced by either a history of isolated willful violations or a lack of adequate audits or supervision

of employees; and

(iv) Significant remedial action commensurate with the circumstances was taken by the licensee such that it demonstrated the seriousness of the violation to other employees, thereby creating a deterrent effect within the licensee's organization. Although removal of the employee from licensed activities is not necessarily required, substantial disciplinary action is expected.

3. ***Violations Involving Old Design Issues.***
The DRC may refrain from proposing a civil penalty for a Severity Level II or III violation involving a past problem, such as in engineering, design, or installation, provided that the violation is documented in an inspection report or official field notes that includes a description of the corrective action and that it meets all of the following criteria:

(a) It was a licensee-identified as a result of its voluntary initiative;

(b) It was or will be corrected, including immediate corrective action and long term comprehensive corrective action to prevent recurrence, within a reasonable time following identification (this action should involve expanding the initiative, as necessary, to identify other failures caused by similar root causes); and

(c) It was not likely to be identified (after the violation occurred) by routine licensee efforts such as normal surveillance or quality assurance (QA) activities.

In addition, the DRC may refrain from issuing a Notice of Violation for a Severity Level II, III, or IV violation that meets the above criteria provided the violation was caused by conduct that is not reasonably linked to present performance (normally, violations that are at least 3 years old) and there had not been prior notice so that the licensee should have reasonably identified the violation earlier. This exercise of discretion is to place a premium on licensees initiating efforts to identify and correct subtle violations that are not likely to be identified by routine efforts before degraded safety systems are called upon to work.

4. ***Violations Identified Due to Previous Enforcement Action.***
The DRC may refrain from issuing a Notice of Violation or a proposed civil penalty for a violation that is identified after the DRC has taken enforcement action, provided that the violation is documented in an inspection report or official field notes that includes a description of the corrective action and that it meets all of the following criteria:

(a) It was licensee-identified as part of the corrective action for the previous enforcement action;

(b) It has the same or similar root cause as the violation for which enforcement action was issued;

(c) It does not substantially change the safety significance or the character of the regulatory concern arising out of the initial violation;

(d) It was or will be corrected, including immediate corrective action and long term comprehensive corrective action to prevent recurrence, within a reasonable time following identification; and

(e) It would not be categorized at Severity Level I.

5. *Violations Involving Special Circumstances.*
Notwithstanding the outcome of the normal enforcement process addressed in Section VI.A or the normal civil penalty assessment process addressed in Section VI.B, the DRC may reduce or refrain from issuing a civil penalty or a Notice of Violation for a Severity Level II, III, IV, or V violation based on the merits of the case after considering the guidance in this statement of policy and such factors as the age of the violation, the technical and regulatory significance of the violation, the clarity of the requirement, the appropriateness of the requirement, the overall sustained performance of the licensee has been particularly good, and other relevant circumstances, including any that may have changed since the violation. This discretion is expected to be exercised only where application of the normal guidance in the policy is unwarranted. In addition, the DRC may refrain from issuing enforcement action for violations resulting from matters not within a licensee's control, such as equipment failures that were not avoidable by reasonable licensee quality assurance measures or management controls. Generally, however, licensees are held responsible for the acts of their employees and contractors. Accordingly, this policy should not be construed to excuse personnel or contractor errors.

VIII. Public Disclosure of Enforcement Actions

Enforcement actions and licensees' responses, in accordance with the Government Records Access and Management Act, II, are publicly available for inspection. In addition, press releases may be issued for orders and civil penalties and they should be issued at the same time the order or proposed imposition of the civil penalty is issued. In addition, press releases may be issued when a proposed civil penalty is withdrawn or substantially mitigated by some amount. Press releases are not normally issued for Notices of Violation that are not accompanied by orders or proposed civil penalties.

IX. Reopening Closed Enforcement Actions

If significant new information is received or obtained by DRC which indicates that an enforcement sanction was incorrectly applied, consideration may be given, dependent on the circumstances, to reopening a closed enforcement action to increase or decrease the severity of a sanction or to correct the record. Reopening decisions will be made on a case-by-case basis, are expected to occur rarely, and require the specific approval of the Executive Secretary.

Appendix A: Safety and Compliance

As commonly understood, safety means freedom from exposure to danger, or protection from harm. In a practical sense, an activity is deemed to be safe if the perceived risks are judged to be acceptable. In the context of DRC's regulatory program, safety means avoiding undue risk or, stated another way, providing reasonable assurance of adequate protection for the public in connection with the use of radioactive materials.

The definition of compliance is much simpler. Compliance simply means meeting applicable regulatory requirements. The relationship between compliance and safety is discussed below.

* Safety is the fundamental regulatory objective, and compliance with DRC requirements plays a fundamental role in giving the DRC confidence that safety is being maintained. DRC requirements, including technical specifications, other license conditions, orders, and rules, have been designed to ensure adequate protection--which corresponds to "no undue risk to public health and safety"--through acceptable design, construction, operation, maintenance, modification, and quality assurance measures. In the context of risk-informed regulation, compliance plays a very important role in ensuring that key assumptions used in underlying risk and engineering analyses remain valid.

* Adequate protection is presumptively assured by compliance with DRC requirements. Circumstances may arise, however, where new information reveals, for example, that an unforeseen hazard exists or that there is a substantially greater potential for a known hazard to occur. In such situations, the DRC has the authority to require licensee action above and beyond existing rules to maintain the level of protection necessary to avoid undue risk to public health and safety.

* The DRC has the authority to exercise discretion to permit continued operations--despite the existence of a noncompliance--where the noncompliance is not significant from a risk perspective and does not, in the particular circumstances, pose an undue risk to public health and safety. When non-compliances occur, the DRC must evaluate the degree of risk posed by that non-compliance to determine if specific immediate action is required. Where needed to ensure adequate protection of public health and safety, the DRC may demand immediate licensee action, up to and including a shutdown or cessation of licensed activities. In addition, in determining the appropriate action to be taken, the DRC must evaluate the non-compliance both in terms of its direct safety and regulatory significance and by assessing whether it is part of a pattern of non-compliance (i.e., the degree of pervasiveness) that can lead to the determination that licensee control processes are no longer adequate to ensure protection of the public health and safety. Based on the DRC's evaluation, the appropriate action could include refraining from taking any action, taking specific enforcement action, issuing orders, or providing input to other regulatory actions or assessments, such as increased oversight (e.g., increased inspection).

* Since some requirements are more important to safety than others, the Executive Secretary should use a risk-informed approach when applying DRC resources to the oversight of licensed activities (this includes enforcement):

Appendix B: Enforcement Examples

This appendix provides examples of violations as guidance in determining the appropriate severity level for violations.

Health Physics (R313-15)

This section provides examples of violations in each of four severity levels as guidance in determining the appropriate severity level for violations in the area of health physics, R313-15.[8]

A. *Severity Level I* - Violations involving for example:

1. A radiation exposure during any year of a worker in excess of 25 rems total effective dose equivalent, 75 rems to the lens of the eye, or 250 rads to the skin of the whole body, or to the feet, ankles, hands or forearms, or to any other organ or tissue;
2. A radiation exposure over the gestation period of the embryo/fetus of a declared pregnant woman in excess of 2.5 rems total effective dose equivalent;
3. A radiation exposure during any year of a minor in excess of 2.5 rems total effective dose equivalent, 7.5 rems to the lens of the eye, or 25 rems to the skin of the whole body, or to the feet, ankles, hands or forearms, or to any other organ or tissue;
4. An annual exposure of a member of the public in excess of 1.0 rem total effective dose equivalent;
5. A release of radioactive material to an unrestricted area at concentrations in excess of 50 times the limits for members of the public as described in R313-15-302(2)(b)(I); or
6. Disposal of licensed material in quantities or concentrations in excess of 10 times the limits of R313-15-1003.

B. *Severity Level II* - Violations involving for example:

1. A radiation exposure during any year of a worker in excess of 10 rems total effective dose equivalent, 30 rems to the lens of the eye, or 100 rems to the skin of the whole body, or to the feet, ankles, hands or forearms, or to any other organ or tissue;
2. A radiation exposure over the gestation period of the embryo/fetus of a declared pregnant woman in excess of 1.0 rem total effective dose equivalent;
3. A radiation exposure during any year of a minor in excess of 1 rem total effective dose equivalent; 3.0 rems to the lens of the eye, or 10 rems to the skin of the whole body, or to the feet, ankles, hands or forearms, or to any other organ or tissue;
4. An annual exposure of a member of the public in excess of 0.5 rem total effective dose equivalent;
5. A release of radioactive material to an unrestricted area at concentrations in excess of 10 times the limits for members of the public as described in R313-15-302(2)(b)(I) (except when operation up to 0.5 rem a year has been approved by the Executive Secretary under R313-15-301(3));
6. Disposal of licensed material in quantities or concentrations in excess of five times the limits of R313-15-1003; or
7. A failure to make an immediate notification as required by R313-15-1202 (1)(a) or (1)(b).

C. *Severity Level III* - Violations involving for example:

1. A radiation exposure during any year of a worker in excess of 5 rems total effective dose equivalent, 15 rems to the lens of the eye, or 50 rems to the skin of the whole body or to the feet, ankles, hands or forearms, or to any other organ or tissue;

2. A radiation exposure over the gestation period of the embryo/fetus of a declared pregnant woman in excess of 0.5 rem total effective dose equivalent (except when doses are in accordance with the provisions of R313-15-208(4));

3. A radiation exposure during any year of a minor in excess of 0.5 rem total effective dose equivalent; 1.5 rems to the lens of the eye, or 5 rems to the skin of the whole body, or to the feet, ankles, hands or forearms, or to any other organ or tissue;

4. A worker exposure above regulatory limits when such exposure reflects a programmatic (rather than an isolated) weakness in the radiation control program;

5. An annual exposure of a member of the public in excess of 0.1 rem total effective dose equivalent (except when operation up to 0.5 rem a year has been approved by the Executive Secretary under R313-15-301(3));

6. A release of radioactive material to an unrestricted area at concentrations in excess of two times the effluent concentration limits referenced in R313-15-302(2)(b)(I) (except when operation up to 0.5 rem a year has been approved by the Executive Secretary under R313-15-301(3));

7. A failure to make a 24-hour notification required by R313-15-1202(2) or an immediate notification required by R313-15-1201(1)(a)(I);

8. A substantial potential for exposures or releases in excess of the applicable limits in R313-15-1001 through 15-1301 whether or not an exposure or release occurs;

9. Disposal of licensed material not covered in Severity Levels I or II;

10. A release for unrestricted use of contaminated or radioactive material or equipment that poses a realistic potential for exposure of the public to levels or doses exceeding the annual dose limits for members of the public, or that reflects a programmatic (rather than an isolated) weakness in the radiation control program;

11. Conduct of licensee activities by a technically unqualified person;

12. A significant failure to control licensed material; or

13. A breakdown in the radiation safety program involving a number of violations that are related (or, if isolated, that are recurring) that collectively represent a potentially significant lack of attention or carelessness toward licensed responsibilities.

D. *Severity Level IV* - Violations involving for example:

1. Exposures in excess of the limits of R313-15-201, 207, or 208 not constituting Severity Level I, II, or III violations;

2. A release of radioactive material to an unrestricted area at concentrations in excess of the limits for members of the public as referenced in R313-15-302(2)(b)(I) (except when operation up to 0.5 rem a year has been approved by the Executive Secretary under R313-15-301(3));

3. A radiation dose rate in an unrestricted or controlled area in excess of 0.002 rem in any 1 hour (2 millirem/hour) or 50 millirems in a year;

4. Failure to maintain and implement radiation programs to keep radiation exposures as low as is reasonably achievable;

5. Doses to a member of the public in excess of any EPA generally applicable environmental radiation standards, such as 40 CFR Part 190;

6. A failure to make the 30-day notification required by R313-15-1201(1)(a)(ii) or 1203(1);

7. A failure to make a timely written report as required by R313-15-1201(2), 1204, or 1206;

8. A failure to report an exceedance of the dose constraint established in R313-15-101(4) or a failure to take corrective action for an exceedance, as required by R313-15-101(4); or

9. Any other matter that has more than a minor safety, health, or environmental significance.

Transportation

This section provides examples of violations in each of the four severity levels as guidance in determining the appropriate severity level for violations in the area of DRC transportation requirements[9].

A. *Severity Level I* - Violations involving for example:

1. Failure to meet transportation requirements that resulted in loss of control of radioactive material with a breach in package integrity such that the material caused a radiation exposure to a member of the public and there was clear potential for the public to receive more than 0.1 rem to the whole body;

2. Surface contamination in excess of 50 times the DRC limit; or

3. External radiation levels in excess of 10 times the DRC limit.

B. *Severity Level II* - Violations involving for example:

1. Failure to meet transportation requirements that resulted in loss of control of radioactive material with a breach in package integrity such that there was a clear potential for the member of the public to receive more than 0.1 rem to the whole body;

2. Surface contamination in excess of 10, but not more than 50 times the DRC limit;

3. External radiation levels in excess of five, but not more than 10 times the DRC limit; or

4. A failure to make required initial notifications associated with Severity Level I or II violations.

C. *Severity Level III* - Violations involving for example:

1. Surface contamination in excess of five but not more than 10 times the DRC limit;

2. External radiation in excess of one but not more than five times the DRC limit;

3. Any noncompliance with labeling, placarding, shipping paper, packaging, loading, or other requirements that could reasonably result in the following:

(a) A significant failure to identify the type, quantity, or form of material;

(b) A failure of the carrier or recipient to exercise adequate controls; or

(c) A substantial potential for either personnel exposure or contamination above regulatory limits or improper transfer of material;

4. A failure to make required initial notification associated with Severity Level III violations; or

5. A breakdown in the licensee's program for the transportation of licensed material

involving a number of violations that are related (or, if isolated, that are recurring violations) that collectively reflect a potentially significant lack of attention or carelessness toward licensed responsibilities.

D. *Severity Level IV* - Violations involving for example:

1. A breach of package integrity without external radiation levels exceeding the DRC limit or without contamination levels exceeding five times the DRC limits;
2. Surface contamination in excess of but not more than five times the DRC limit;
3. A failure to register as an authorized user of an NRC-Certified Transport package;
4. A noncompliance with shipping papers, marking, labeling, placarding, packaging or loading not amounting to a Severity Level I, II, or III violation;
5. A failure to demonstrate that packages for special form radioactive material meets applicable regulatory requirements;
6. A failure to demonstrate that packages meet DOT Specifications for 7A Type A packages; or
7. Other violations that have more than minor safety or environmental significance.

Materials Operations

This section provides examples of violations in each of the four severity levels as guidance in determining the appropriate severity level for violations in the area of fuel cycle and materials operations.

A. *Severity Level I* - Violations involving for example:

1. Radiation levels, contamination levels, or releases that exceed 10 times the limits specified in the license;
2. A system designed to prevent or mitigate a serious safety event not being operable when actually required to perform its design function;
3. A nuclear criticality accident;
4. A failure to follow the procedures of the quality management program, required by R313-32-32, that results in a death or serious injury (e.g., substantial organ impairment) to a patient;
5. A safety limit or the application being exceeded; or
6. Significant injury or loss of life due to a loss of control over licensed or certified activities, including chemical processes that are integral to the licensed or certified activity, whether radioactive material is released or not.

B. *Severity Level II* - Violations involving for example:

1. Radiation levels, contamination levels, or releases that exceed five times the limits specified in the license;
2. A system designed to prevent or mitigate a serious safety event being inoperable;
3. A substantial programmatic failure in the implementation of the quality management program required by R313-32-32 that results in a misadministration; or

4. The potential for a significant injury or loss of life due to a loss of control over licensed activities, including chemical processes that are integral to the licensed activity, whether radioactive material is released or not.

C. *Severity Level III* - Violations involving for example:

1. A failure to control access to licensed materials for radiation protection purposes as specified by DRC requirements;

2. Possession or use of unauthorized equipment or materials in the conduct of licensee activities which degrades safety;

3. Use of radioactive material on humans where such use is not authorized;

4. Conduct of licensed activities by a technically unqualified or uncertified person;

5. A substantial potential for exposures, radiation levels, contamination levels, or releases, including releases of toxic material caused by a failure to comply with DRC rules, from licensed or certified activities in excess of regulatory limits;

6. Substantial failure to implement the quality management program as required by R313-32-32 that does not result in a misadministration; failure to report a misadministration; or programmatic weakness in the implementation of the quality management program that results in a misadministration;

7. A breakdown in the control of licensed activities involving a number of violations that are related (or, if isolated, that are recurring violations) that collectively represent a potentially significant lack of attention or carelessness toward licensed responsibilities;

8. A failure, during radiographic operations, to have present at least two qualified individuals or to use radiographic equipment, radiation survey instruments, and/or personnel monitoring devices as required by R313-36;

9. A failure to receive required DRC approval prior to the implementation of a change in licensed activities that has radiological or programmatic significance, such as, a change in ownership; lack of an RSO or replacement of an RSO with an unqualified individual; a change in the location where licensed activities are being conducted, or where licensed material is being stored where the new facilities do not meet the safety guidelines; or a change in the quantity or type of radioactive material being processed or used that has radiological significance;

10. A significant failure to meet Executive Secretary requirements including a failure to notify the DRC as required by rule or license condition, substantial failure to meet Executive Secretary's standards, failure to conduct and/or complete Executive Secretary activities in accordance with rule or license condition, or failure to meet required schedules without adequate justification;

11. A system designed to prevent or mitigate a serious safety event:

(a) Not being able to perform its intended function under certain conditions (e.g., safety system not operable unless utilities available, materials or components not according to specifications); or

(b) Being degraded to the extent that a detailed evaluation would be required to determine its operability;

12. Changes in parameters that cause unanticipated reductions in margins of safety; or

13. A failure, during radiographic operations, to stop work after a pocket dosimeter is found

to have gone off-scale, or after an electronic dosimeter reads greater than 200 mrem, and before a determination is made of the individual's actual radiation exposure.

D. *Severity Level IV* - Violations involving for example:

1. A failure to maintain patients hospitalized who have cobalt-60, cesium-137, or iridium-192 implants or to conduct required leakage or contamination tests, or to use properly calibrated equipment;

2. Other violations that have more than minor safety or environmental significance;

3. Failure to follow the quality management (QM) program, including procedures, whether or not a misadministration occurs, provided the failures are isolated, do not demonstrate a programmatic weakness in the implementation of the QM program, and have limited consequences if a misadministration is involved; failure to conduct the required program review; or failure to take corrective actions as required by R313-32-32; or

4. A failure to keep the records required by R313-32-32 or R313-32-33.

Miscellaneous Matters

This section provides examples of violations in each of the four severity levels as guidance in determining the appropriate severity level for violations involving miscellaneous matters.

A. *Severity Level I* - Violations involving for example:

1. Inaccurate or incomplete information that is provided to the DRC (a) deliberately with the knowledge of a licensee official that the information is incomplete or inaccurate, or (b) if the information, had it been complete and accurate at the time provided, likely would have resulted in regulatory action such as an immediate order required by the public health and safety;

2. Incomplete or inaccurate information that the DRC requires be kept by a licensee that is (a) incomplete or inaccurate because of falsification by or with the knowledge of a licensee official, or (b) if the information, had it been complete and accurate when reviewed by the DRC, likely would have resulted in regulatory action such as an immediate order required by public health and safety considerations; or

3. Information that the licensee has identified as having significant implications for public health and safety or the common defense and security ("significant information identified by a licensee") and is deliberately withheld from the Executive Secretary.

B. *Severity Level II* - Violations involving for example:

1. Inaccurate or incomplete information that is provided to the DRC (a) by a licensee official because of careless disregard for the completeness or accuracy of the information, or (b) if the information, had it been complete and accurate at the time provided, likely would have resulted in regulatory action such as a show cause order or a different regulatory position;

2. Incomplete or inaccurate information that the DRC requires be kept by a licensee which is (a) incomplete or inaccurate because of careless disregard for the accuracy of the information on the part of a licensee official, or (b) if the information, had it been complete and accurate when

reviewed by the DRC, likely would have resulted in regulatory action such as a show cause order or a different regulatory position; or

3. "Significant information identified by a licensee" and not provided to the Executive Secretary because of careless disregard on the part of a licensee official;

C. *Severity Level III* - Violations involving for example:

1. Incomplete or inaccurate information that is provided to the DRC (a) because of inadequate actions on the part of licensee officials but not amounting to a Severity Level I or II violation, or (b) if the information, had it been complete and accurate at the time provided, likely would have resulted in a reconsideration of a regulatory position or substantial further inquiry such as an additional inspection or a formal request for information;

2. Incomplete or inaccurate information that the DRC requires be kept by a licensee that is (a) incomplete or inaccurate because of inadequate actions on the part of licensee officials but not amounting to a Severity Level I or II violation, or (b) if the information, had it been complete and accurate when reviewed by the DRC, likely would have resulted in a reconsideration of a regulatory position or substantial further inquiry such as an additional inspection or a formal request for information; or

3. A failure to provide "significant information identified by a licensee" to the Executive Secretary and not amounting to a Severity Level I or II violation;

D. *Severity Level IV* - Violations involving for example:

1. Incomplete or inaccurate information of more than minor significance that is provided to the DRC but not amounting to a Severity Level I, II, or III violation;

2. Information that the DRC requires be kept by a licensee and that is incomplete or inaccurate and of more than minor significance but not amounting to a Severity Level I, II, or III violation.

1. This policy primarily addresses the activities of DRC licensees and applicants for DRC licenses. Therefore, the term "licensee" is used throughout the policy.

2. The term "escalated enforcement action" as used in this policy means a Notice of Violation or civil penalty for any Severity Level I, II, or III violation (or problem) or any order based upon a violation.

3. The term "requirement" as used in this policy means a legally binding requirement such as a statute, rule, license condition, technical specification, or order.

4. The term "repetitive violation" or "similar violation" as used in this policy statement means a violation that reasonably could have been prevented by a licensee's corrective action for a previous violation normally occurring (1) within the past 2 years of the inspection at issue, or (2) the period within the last two inspections, whichever is longer.

5. The term "licensee official" as used in this policy statement means a first-line supervisor or above, a licensed individual, a radiation safety officer, or an authorized user of licensed material whether or not listed on a license. Notwithstanding an individual's job title, severity level

categorization for willful acts involving individuals who can be considered licensee officials will consider several factors, including the position of the individual relative to the licensee's organizational structure and the individual's responsibilities relative to the oversight of licensed activities and to the use of licensed material.

6. An "event," as used here, means (1) an event characterized by an active adverse impact on equipment or personnel, readily obvious by human observation or instrumentation, or (2) a radiological impact on personnel or the environment in excess of regulatory limits, such as an overexposure, a release of radioactive material above DRC limits, or a loss of radioactive material. For example, an equipment failure discovered through a spill of liquid, a loud noise, the failure to have a system respond properly, or an annunciator alarm would be considered an event; a system discovered to be inoperable through a document review would not. Similarly, if a licensee discovered, through quarterly dosimetry readings, that employees had been inadequately monitored for radiation, the issue would normally be considered licensee-identified; however, if the same dosimetry readings disclosed an overexposure, the issue would be considered an event.

7. Discretion is not warranted when a licensee identifies a violation as a result of an event where the root cause of the event is obvious or the licensee had prior opportunity to identify the problem but failed to take action that would have prevented the event. Discretion may be warranted if the licensee demonstrated initiative in identifying the violation's root cause.

8. Personnel overexposures and associated violations incurred during a life-saving or other emergency response effort will be treated on a case-by-case basis.

9. Some transportation requirements are applied to more than one licensee involved in the same activity such as a shipper and a carrier. When a violation of such a requirement occurs, enforcement action will be directed against the responsible licensee which, under the circumstances of the case, may be one or more of the licensees involved.

NRC INSPECTION MANUAL NMSS/URB

MANUAL CHAPTER 2801

URANIUM MILL AND 11e.(2) BYPRODUCT MATERIAL DISPOSAL SITE AND FACILITY INSPECTION PROGRAM

2801-01 PURPOSE

This chapter establishes the safety inspection program for uranium mills and 11e.(2) byproduct material disposal sites and facilities (11e.(2) sites) licensed and regulated under 10 CFR Part 40 including mills authorized to take 11e.(2) byproduct material. The disposal sites include both commercial disposal facilities and sites associated with licensed uranium mills. Included in the program are inspection procedures related to all phases of activities: construction and pre-operations, operations, and reclamation/closure. Procedures presented cover those facilities licensed and regulated in their entirety by NRC. The primary purpose of the inspection program is to obtain sufficient information through observations, personnel interviews, independent measurements, and review of facility records and procedures, to ascertain, in a timely manner, whether facility operations, and radiological and non-radiological programs regulated by the U.S. Nuclear Regulatory Commission conform with regulatory requirements and the conditions of the applicable license. As a result, the inspection program determines that uranium mills and 11e.(2) sites are managed throughout their entire life cycle in a manner that provides protection from radioactivity to employees, members of the public, and the environment.

2801-02 OBJECTIVES

02.01 To establish general policy and priorities for the inspection of uranium mills and 11e.(2) byproduct material disposal sites.

02.02 To establish a uniform process for the inspection of uranium mills and 11e.(2) byproduct material disposal sites.

02.03 To define specific requirements for inspection of uranium mills and 11e.(2) byproduct material disposal sites.

2801-03 DEFINITIONS

03.01 11e.(2) Byproduct Material, as defined in Section 11 of the Atomic Energy Act of 1954, as amended, means tailings or waste produced by the extraction of uranium or thorium from any ore processed primarily for its source material content.

03.02 Closure, as defined in Appendix A to 10 CFR Part 40, means the activities, after operations, to decontaminate and decommission the buildings and site used to produce byproduct materials and reclaim the tailings and/or waste disposal area(s). Also, commonly referred to as decommissioning or reclamation.

03.03 Decommission, as defined in 10 CFR 40.4, means to remove safely from service and reduce residual radioactivity to a level that permits release of the property for unrestricted use and termination of the license. Would include remediation of the disposal area to be deeded to the Department of Energy.

03.04 Decommissioning Plan, as defined in Appendix A to Part 40, for the purposes of Criterion 6A, means the plan detailing activities to accomplish reclamation of the tailings or waste disposal area in accordance with the technical criteria of Appendix A. In practice, the Decommissioning Plan usually details the demolition and/or cleanup of the mill buildings and large equipment, tanks, etc. The plan for stabilization of the tailings and/or waste disposal areas and cleanup of contaminated soil is often referred to as the Reclamation Plan.

03.05 Operation, for a mill is the process of extracting uranium from ore. For an 11e.(2) disposal facility, it is receipt and emplacement of 11 e.(2) byproduct material.

03.06 Performance-Based License (PBL), allows the licensee to make changes to the facility without prior NRC approval if certain conditions are met. These conditions are specified in the performance-based license condition contained in the PBL. Consistent with the regulatory reduction effort initiated by the staff in 1994, the staff is currently issuing all new and renewed operating licenses as performance-based.

2801-04 PROGRAM APPLICABILITY

This program has been developed to respond to needs for inspection procedures related to construction, pre-operation, operations, and reclamation/closure for sites licensed by NRC. Where 11e.(2) byproduct material disposal sites are operating under Agreement State regulation, it is expected that responsibility for regulation and inspection activities at those sites will continue to reside with the Agreement States. It is noted that existing inspection procedures from other NRC programs can be applied, in full or in part, to many aspects of uranium mill and 11e.(2) byproduct material disposal site inspections, and that additional inspection procedures specific to disposal technology, and on-site activity can be developed and employed incrementally, as needed. Tables 1 and 2 provide a listing of procedures that are currently available and include comments concerning their applicability. Minimum and normal frequencies of inspection are listed; adoption of the minimum frequency of inspection should be tailored to both the level of site activity and to the performance of the licensee.

2801-05 PROGRAM DESCRIPTION

05.01 General. The inspection program for sites specifically licensed for 11e.(2) byproduct material disposal, and for uranium mills has been divided into three parts. The parts are designed to be responsive to the various inspection needs during the different phases of facility life: construction/pre-operations, operations, and reclamation/closure. Each phase of the inspection program varies with respect to applicable inspection procedures, inspection frequency, and degree to which a given procedure may be applied. The inspection programs for each phase are discussed in narrative form in Section 2801-08. Tables 1 and 2 present information for the pre-operations, operations, and closure phases.

This chapter identifies requirements for the inspection of the health, safety, and environmental aspects of licensee activities. The inspector should be completely familiar with the current regulatory requirements and commitments associated with the license. These include the comparable parts of title 10, U.S. Code of Federal Regulations, the license application, applicable guides, and other codes to which licensees may commit by reference. In the case that Nuclear Regulatory Commission guidance documents are updated after a license or amendment is issued, the licensee is generally only committed to follow the original guidance. Thus, the particular revision of the guidance to which the licensee has been committed is of importance.

The scope of inspection procedures (IPs), taken as a whole, is not intended to be limited to only those elements discussed in the procedures. The descriptions and examples contained in the procedures are provided primarily for illustrative purposes, as examples of things that should be examined. Examination of other safety-significant activities not expressed or implied in a procedure is left to the

inspector's judgment, in consideration of the relative degree of safety risk posed by the subject activity.

The environmental aspects of the activities relate to those license conditions that have been placed on the operation by the Nuclear Regulatory Commission as a result of reviews conducted under the authority of the National Environmental Policy Act. Environmental inspections would be conducted at the same time as health and safety inspections.

05.02 Adjustments. The program provides regional offices the flexibility to adjust the frequencies of inspections, within the various program areas, based on an evaluation of the inspection findings and enforcement experience with a particular licensee. Alternate frequencies of inspection for various procedures are specified in Tables 1 and 2. The lower frequency specified is the minimum frequency to which the inspection may be reduced by the regional office. The higher frequency of inspection specified for the procedure shall be the normal inspection frequency for the program. There is no maximum frequency expressed in Tables 1 and 2. It is expected that any level of effort (i.e., frequency of inspection) above that specified as the normal frequency would be established at a level commensurate with whatever is needed to resolve identified problems and their importance to safety.

05.03 Performance-Based License. At sites operating under a PBL, the inspector should ensure that changes authorized under the PBL do not erode the basis for NRC's licensing decision. In evaluating the changes made to the facility, inspectors should recognize that the reviews conducted by the licensee's evaluation panel are not reviews of safety nor environmental acceptability. Rather, the evaluation panel reviews under the PBL are a determination of whether the proposed changes require prior NRC review. Licensees are obligated to ensure that any change considered to the facility should be safe and environmentally acceptable. Then the evaluation panel is responsible for determining if the proposed changes need to be submitted to NRC. There will be circumstances where the licensee finds that the proposed changes are acceptable; however, the change may still require an NRC review.

As a general set of guidelines, those changes that will require NRC review include changes to:

1) Those things described in the application or subsequent submittals that would reduce the safety basis of the facility;

2) Procedures conditioned in the license or outlined, summarized, or included in the application; and

3) Things specifically conditioned in the license.

Additional guidance on the inspection of PBL activities undertaken by licensees can be found in IP 37001, "10 CFR 50.59 Safety Evaluation Program." Although this IP is applicable to 10 CFR Part 50 licenses, the basic philosophy and inspection process can be adopted to PBLs since the PBL concept was derived from 10 CFR 50.59.

2801-06 REVIEW OF EVENTS

All inspections should include, as appropriate, a review of licensee reportable and non-reportable events that involve contamination, releases, equipment malfunctions, or other similar events that have generic significance. The review should cover corrective actions taken by the licensee and follow-up actions taken to prevent recurrence. In the case of reports received by NRC involving radiological health and safety, the region is responsible for determining the seriousness of the reported incident and whether an immediate reactive inspection is necessary. When such reports involve programmatic areas normally addressed by Headquarters programs, the region shall confer with Headquarters, to jointly determine what response, if any, is required, including whether the NRC response should include personnel from the Headquarters.

Non-reportable events are those determined by the licensee to fall outside criteria requiring them to be reported to NRC. Although, these events are not reported formally to NRC, licensees occasionally may contact regional staff informally to describe the event and explain it is not required to be reported. Still, licensees are often required, through license conditions or commitments, to maintain records of non-reportable events onsite. Non-reportable events should be examined during inspections, to determine appropriate corrective actions or follow-up to preclude recurrence: these events may involve safety issues that should be followed up by the Occupational Safety and Health Administration, Mine Safety and Health Administration, and existing or potential operational difficulties not otherwise reportable, such as biointrusion in disposal units, erosion or sloughing of trench walls, or uncontrolled wind erosion. Additional guidance on non-reportable events is contained in individual inspection procedures.

2801-07 INDEPENDENT INSPECTION EFFORT

Each inspector should spend some onsite inspection time performing independent inspection effort. The amount of time spent should be commensurate with the level of risk, the complexity of the facility, and the degree to which inspection resources have already been committed to significant safety and environmental issues that have already been identified in the facility. This effort may include more in-depth

inspection in selected technical areas than that normally called for by the formal procedures. The major objective of this effort should be to gain increased understanding of potential safety and environmental hazards of particular activities of interest, such as those that may have been involved in a series of recent non-reportable events.

Comparison of the findings from this type of effort with the licensee's findings may uncover unresolved safety and environmental questions, improper maintenance practices, and other problems that may not be discovered through other means. Discovered hazards outside the scope of Nuclear Regulatory Commission IPs or Nuclear Regulatory Commission regulatory authority should be conveyed to the licensee at the exit interview (as set forth in IP 88002), described to regional management during debriefing, and included in the formal inspection report. In cases where regulatory jurisdiction for the observed potential hazard is clear, the finding shall be reported to the responsible agency for action (i.e., State, Mine Safety and Health Administration, Environmental Protection Agency, etc.). In all cases where the finding involves a potential effect on radiological health and safety, the finding shall be followed during subsequent inspections until the licensee has addressed the concern. However, special follow-up inspections solely on the basis of Mine Safety and Health Administration issues are not required unless the potential hazard also directly involves radiological health or safety.

2801-08 RANDOM SELECTION AND EXAMINATION OF RECORDS

Many of the inspection procedures normally require the inspector to select certain types of records at random for closer examination. However, random selection is not always required. The inspector may seek out certain records of interest when so inclined.

Random selection is a technique that recognizes the fact that the Nuclear Regulatory Commission does not have the resources to inspect every detail of plant. The Nuclear Regulatory Commission inspection program is predicated on the fact that the licensee is ultimately responsible for the safety of the licensed facility. Random selection, where specified in a procedure, allows the inspector to sample specific aspects of the licensee's safety and environmental program to be studied at a level of detail that would be impractical if exercised uniformly across the entire safety program. When random selection in a procedure is specified, the inspector should select records corresponding to activities that relate to the Nuclear Regulatory Commission's regulatory role, such as effluent monitoring records or ground-water restoration records. Also included should be records required to be retained for later decommissioning.

To reasonably verify that activities are conducted safely and in an environmentally acceptable manner, the inspector also should randomly select personnel for interviews. The extent and depth to which random selections or examinations are

needed are left to the inspector's judgment, depending on how satisfied the inspector is that operational and safety safeguards procedures are being followed uniformly.

2801-09 REGIONAL RESPONSIBILITY FOR LICENSEES

The responsibility for inspection resides with the regional office in which the licensee operation is located. For efficiency in resource use, the regional office may request another regional office or Headquarters to assist in the conduct of inspections when specialized technical expertise is needed and is not available within the responsible region. In some cases, a region may wish to transfer all or part of the inspection responsibility to another region or to Headquarters. These arrangements may be made with mutual agreement between the offices involved. If a permanent transfer of total inspection responsibility is involved, the affected regional offices should ensure that the appropriate changes are made to the computerized license data file by informing the Office of Nuclear Material Safety and Safeguards of the change in inspection responsibility for the license and requesting a change in the file. The regional office assuming inspection responsibility will be credited with the caseload in budgeting and allocating resources.

2801-10 INSPECTION DURING VARIOUS PHASES OF FACILITY LIFE

10.01 Part I - Inspection During the Construction and Pre-Operational Phase

a. Purpose. The purpose of this instruction is to provide guidance for planning and conducting inspections during the construction/pre-operations phase of facility life. Activities encompassed during the construc-tion/pre-operations phase of a uranium mill or disposal site include disposal trench construction: liner placement: observation and verification of placement and compaction of cover materials: equipment use: fire protection program (equipment and training procedures):, and compliance with applicable construction specifications requirements in accordance with applicable management controls and quality assurance procedures. Activities encompassed during start-up of a mill that has been on stand-by, would include equipment operation/function and safety.

b. Implementation. This inspection program begins on issuance of the license, or license amendment to restart the mill, and continues until the site begins active receipt and disposal of waste, or processing of ore at a mill. Situations may arise in which inspection requirements specified for other phases may apply concurrently with those specified here for the pre-operational phase. For example, certain

requirements contained under Parts I and II may apply in the construction, pre-operational checks, and start-up of a major modification to the site.

The uranium mill or 11e.(2) byproduct material disposal site pre-operational inspection program is defined by selection from among the list of procedures in Table 1. The areas covered during an inspection need not be limited only to those elements discussed in the procedures, but may need to include examination of other activities not expressly delineated or covered in existing procedures. In such cases, the inspector must exercise good professional judgment in modifying the inspection and in identifying to the program office the possible need for development of supplemental guidance. Conformance with the principles of reducing radiation exposure to as low as is reasonably achievable (ALARA) should be a principal concern at all times.

For the normal inspection frequency, each procedure should be executed for each specific frequency. In practice, part or all of the procedure element may need to be examined during each inspection visit.

During inspections, emphasis should be placed on physical examinations, observation of conduct of operations, independent measurements, and personnel interviews. Attention should be directed toward the availability of written procedures, the degree to which they are being followed, and the state of training of on-site personnel. Effort should be concentrated on areas of perceived concern (highest safety risk) and site activities performed since the last inspection.

Review of records should involve only a sampling of those records important to safety of personnel and the general public. For example, if the organizational structure has not changed with respect to personnel and assigned functions and responsibilities, the inspector should not pursue the subject of organization in any detail, unless there is reason to believe that such is not the case. Discretion in such areas is left to the inspector's judgement.

c. Regulatory Considerations. The inspector should be familiar with current license requirements; previous inspection reports; applicable codes, standards and guides; and the following regulations:

10 CFR Part 19, "Notices, Instructions, and Reports to

Workers: Inspection and Investigations."

10 CFR Part 20, "Standards for Protection against Radiation."

10 CFR Part 21, "Reporting of Defects and Noncompliance."

10 CFR Part 40, "Domestic Licensing of Source Material."

10 CFR Part 61.82, "Commission Inspection of Land Disposal Facilities (Commercial Disposal Only)."

d. Guidance for Use of Inspection Procedures during the Pre-Operational Phase. The inspection procedures indicated in Table 1 for the construction/pre-operations phase are applicable to inspections conducted at uranium mills and 11e.(2) byproduct material disposal sites during construction/pre-operations. The inspection staff can determine the applicable elements of each procedure by reviewing the procedure, the facility license, and reports of previous inspections.

10.02 Part II - Inspection during the Operations Phase

a. Purpose. The purpose of this instruction is to provide guidance for planning and conducting inspections during the operations phase of the facility. Activities encompassed during the operations phase include receipt and handling of incoming 11e.(2) byproduct material, or the processing of ore and packaging of yellowcake; emplacement of the 11e.(2) byproduct material for disposal; radiation safety and environmental monitoring activities; and records management.

b. Implementation. This inspection program begins on issuance of the facility license, or a license amendment to allow a uranium mill on stand-by to restart, and continues until the facility ceases active receipt of materials and/or disposal of waste. Situations may arise in which inspection requirements specified for other phases may apply concurrently with those specified here for the operations phase. For example, certain requirements contained under Parts I and III may apply in the operations, or start-up of a facility.

The uranium mill or 11e.(2) byproduct material disposal site operations inspection program is defined by selection from among the list of procedures in Table 2. The areas covered during an inspection need not be limited only to those elements discussed in the procedures, but may need to include examination of other activities not expressly delineated or covered in existing procedures. In such cases, the inspector must exercise good professional judgment in modifying the inspection and in identifying to the program office the possible need for development of supplemental guidance. Conformance with the principles of ALARA should be a principal concern at all times.

For the normal inspection frequency, each procedure should be executed for each specific frequency. In practice, part or all of the procedure element may need to be examined during each inspection visit. Emphasis should be placed on physical examinations, observation of conduct of operations, independent measurements, and personnel interviews. Attention should be directed toward the availability of written procedures, the degree to which they are being followed, and the state of training of on-site personnel. Effort should be concentrated on areas of perceived concern (highest safety risk) and licensee activities conducted since the last inspection.

Review of records should otherwise involve only a sampling of those records important to safety of personnel and the general public. For example, if the organizational structure has not changed with respect to personnel and assigned functions and responsibilities, the inspector should not pursue the subject of organization in any detail, unless there is reason to believe that such is not the case. Discretion in such areas is left to the inspector's judgment.

c. Regulatory Considerations. The inspector should be familiar with current license requirements; previous inspection reports; applicable codes, standards and guides; and the following regulations:

10 CFR Part 19, "Notices, Instructions, and Reports to Workers:

Inspection and Investigations."

10 CFR Part 20, "Standards for Protection against Radiation."

10 CFR Part 21, "Reporting of Defects and Noncompliance."

10 CFR Part 40, "Domestic Licensing of Source Material."

10 CFR Part 61.80, "Maintenance of Records, Reports, and Transfers."

10 CFR Part 61.82, "Commission Inspection of Land Disposal Facilities

(Commercial Disposal Only)

d. Guidance for Use of Inspection Procedures During Operations. The inspection procedures indicated in Table 2 for the Operations Phase are applicable to inspections conducted at uranium mills and 11e.(2) byproduct material disposal sites, including mills authorized for disposal of in-situ leach facility waste and other 11e.(2) byproduct material. The inspection staff can determine the applicable elements of each procedure by reviewing the procedure, the facility license, and reports of previous inspections. Inspectors should also refer to applicable portions of Regulatory Guides 4.14, 8.22, and 8.30, for details.

10.03 Part III - Inspection During the Reclamation/Closure Phase.

a. Purpose. The purpose of this instruction is to provide guidance for planning and conducting inspections during the period of reclamation/closure of a uranium mill site or 11e.(2) byproduct material disposal site. In some cases, as specifically allowed or required by license condition, some closure activities may occur for some parts of a facility during the operations phase. The purpose of the inspection is to verify, by field observations and review of licensee records, that decontamination of soil, sediment, surface waters, and ground-water, as well as reclamation of the disposal cell, are being performed in accordance with NRC-approved plans.

b. Implementation. This program is initiated when the licensee begins implementation of any portion of the approved reclamation/decommissioning plan. The foundation for planning and scheduling inspections will thus be the licensee's progress in implementing the reclamation plan (construction schedule). The criteria for inspections will be license conditions and applicable regulations, some of which will directly address reclamation activities. In many cases, portions of the reclamation plan may be implemented for part of a site while active operations continue elsewhere on site. In these cases, the appropriate portions of this program should be implemented in conjunction with the operations inspection program. The reclamation plan itself, as amended during site operation and approved by NRC, should be reviewed by the regional office to determine if procedural or scheduling modifications are necessary to enable planning of an efficient inspection program. The inspection program continues in effect until the licensee has implemented all elements of the reclamation plan, the license is terminated, and the title to the land is transferred to the U.S. Department of Energy for long-term surveillance and maintenance.

The 11e.(2) byproduct material disposal site, or uranium mill reclamation and decommissioning inspection program is also defined by selection from among the list of procedures in Table 2. The areas covered during an inspection need not be limited only to those elements discussed in the procedures, but may need to include examination of other activities not expressly delineated or covered in existing procedures. In such cases, the inspector must exercise good professional judgment in modifying the inspection and in identifying to the program office the possible need for development of supplemental guidance. Conformance with the principles of ALARA should be a principal concern at all times.

For inspections during site remediation/closure (includes licensee performing cleanup verification measurements), each procedure should be executed for each specific frequency. In practice, part or all of the procedure element may need to be examined during each inspection visit. Emphasis should be placed on physical examinations, observation of conduct of operations, limited independent measurements (e.g., split samples), and personnel interviews. Attention should be directed toward the availability of the licensee's written procedures, the degree to which they are being followed, and the state of training of on-site personnel. Effort should be concentrated on areas of perceived concern. Discretion in such areas is left to the inspector's judgment in consultation with Headquarters staff (project manager, technical reviewers).

A confirmatory survey may be performed as an audit of the licensee's final survey results, to independently confirm that the report is accurate and representative of site conditions, but is only necessary if there is significant doubt regarding the licensee's final survey results. A confirmatory survey will be performed if one or more of the following apply to decommissioning of the site: 1) repeated violations, with the inclusion of a "management paragraph"; 2) issuance of an order; 3) failure to take short-term corrective measures; 4) event requiring a reactive inspection; 5) limited financial and technical viability of the licensee; and 6) significant problems identified with the reclamation plan or final survey data.

c. Regulatory Considerations. The inspector should be especially familiar with current license requirements; previous inspection reports; applicable codes, standards and guides; and the following regulations:

10 CFR Part 20, "Standards for Protection against Radiation."

10 CFR Part 40, "Domestic Licensing of Source Material."

10 CFR Part 61.82, "Commission Inspection of Land Disposal

Facilities (Commercial Disposal Only)."

d. Guidance for Use of Inspection Procedures During Closure The inspection procedures indicated in Table 2 are applicable, as noted, to inspections conducted at 11e.(2) byproduct material disposal sites, or uranium mills during closure. The most applicable procedure is under development and will be entitled, "Decommissioning Inspection Procedure for Uranium Mill Sites." The inspection staff can determine the applicable elements of each procedure by reviewing the procedure, the facility license, and the licensee's closure (reclamation) plan.

END

Attachments:

Table 1, Inspection Procedures Applicable to Pre-Operational Inspection of a Uranium Mill or 11e.(2) Byproduct Material Disposal Site

Table 2, Inspection Procedures Applicable to Inspection of a Uranium Mill or 11e.(2) Byproduct Material Disposal Site during Operations and

Closure

TABLE 1 - INSPECTION PROCEDURES APPLICABLE TO PRE-OPERATIONAL INSPECTION OF A URANIUM MILL OR 11e.(2) BYPRODUCT MATERIAL DISPOSAL SITE

Procedure Number	Procedure Title	Inspection Frequency	Applicability of Procedure to the Inspection
		Minimum Normal	
30703	Management Entrance/Exit Interview	Each Each Inspection Inspection	The general principles of the procedure are applicable.
36100	10 CFR Part 21 Inspection at Nuclear Power Reactors	As As Necessary Necessary	Inspectors should be sensitive to the underlying principle driving this procedure.
37001	10 CFR 50.59 Safety Evaluation Program	As As Necessary Necessary	As applicable to implementation of performance-based license (PBL) since the PBL concept was derived from 10 CFR 50.59.
88001	Construction Review	Annual Key Construction Milestones	Applicable to the inspection of engineering and construction aspects.
88005	Management Organization and Construction	Annual Annual	Inspector should subscribe to the general principles established in this procedure.
88045	Environmental Protection	Annual Twice per Year	License conditions will specify offsite monitoring and sampling locations, frequencies, and applicable limits on levels and concentrations of radioactivity.
92701	Follow-up	As As Necessary Necessary	Generic procedure applicable.
92702	Follow-up on Violations/Deviations	As As Necessary Necessary	Generic procedure applicable.
92703	Confirmatory Action Letters	As As Necessary Necessary	Generic procedure applicable.
XXXXX	In Situ Leach (ISL) Facilities Programs	Annual Twice per Year	Applicable to the operating aspects generic to uranium mills and in-situ leach facilities.

TABLE 2 - INSPECTION PROCEDURES APPLICABLE TO INSPECTION OF A URANIUM MILL SITE OR 11e.(2) BYPRODUCT MATERIAL DISPOSAL SITE DURING OPERATIONS AND CLOSURE

OPERATIONS PHASE CLOSURE PHASE

Procedure Number	Procedure Title	Inspection Frequency Minimum Normal	Applicability of the Procedure	Inspection Frequency Minimum Normal	Applicability of the Procedure
30703	Management Entrance/Exit Interview	Each Each Inspection Inspection	The general principles established in this procedure should be followed.	As As Necessary Necessary	The general principles established in this procedure should be followed.
37001	10 CFR 50.59 Safety Evaluation Program	As As Necessary Necessary	As applicable to implementation of performance-based license (PBL) since the PBL concept was derived from 10 CFR 50.59.	As As Necessary Necessary	As applicable to implementation of performance-based license (PBL) since the PBL concept was derived from 10 CFR 50.59.
83822	Radiation Protection	Annual Twice per Year	This procedure is applicable in its entirety.	Each Each Inspection Inspection	Initially, the entire procedure should be followed to determine that the approved program is being implemented and to establish the potential for exposures. Subsequent inspections can be tailored to concentrate on identified areas of risk.
83890	Closeout Inspection and Survey	N/A N/A	N/A	Final Inspection	Use this procedure in conjunction with the new decommissioning procedure.
86740	Inspection of Transportation Activities	Annual Twice per Year	The procedure should be used to confirm compliance for yellowcake or byproduct shipments.	As As Necessary Necessary	Use the procedure only if source or byproduct material is transported off-site.
88001	On-Site Construction	Annual Twice per Year	This procedure is for the engineering and construction aspects of a disposal cell and implementation requires the assistance of Headquarters staff.	As Needed As Needed	Key activities to be inspected are construction of the radon barrier and the erosion protection layer of the disposal cell.
88005	Management Organization and Controls	Annual Annual	This procedure is generally applicable. Section 03.05, Q/A Programs should be supplemented with guidance (e.g., NMSS Handbook).	Annual Annual	Inspections should determine if the approved procedures are being implemented, and if NMSS is properly involved with any changes made to a procedure.
88010	Operator Training/Retraining	Every Other Annual Year	This procedure is applicable to mill and disposal sites.	Every Other Annual Year	This procedure is applicable to mill and disposal sites.
88020	Operations Review	Annual Twice per Year	Some sections of this procedure apply.	Annual	See Sections 02.01b, "Inspection of Tailings Dam" and 02.02, "Housekeeping".

TABLE 2 - INSPECTION PROCEDURES APPLICABLE TO INSPECTION OF A URANIUM MILL SITE OR 11e.(2) BYPRODUCT MATERIAL DISPOSAL SITE DURING OPERATIONS AND CLOSURE

OPERATIONS PHASE CLOSURE PHASE

Procedure Number	Procedure Title	Inspection Frequency Minimum Normal	Applicability of the Procedure	Inspection Frequency Minimum Normal	Applicability of the Procedure
88025	Maintenance and Surveillance Testing	Annual Twice per Year	This procedure is for reactors, but some generally applicable points.	Annual Twice per Year	This procedure applicable only to emergency utility services and general maintenance.
88035	Radioactive Waste management	Annual Twice per Year	Sections 02.01 to 02.06 are generally applicable. The procedure needs to be updated to refer to sections of new 10 CFR Part 20.	Annual Twice per Year	Sections 02.01 to 02.07 of this procedure are generally applicable.
88045	Environmental Protection	Annual Twice per Year	This procedure is applicable in its entirety.	Annual Twice per Year	This procedure is applicable in its entirety. The potential for off-site releases will be less during closure, but must still be inspected.
88050	Emergency Preparedness	Every 2 Every 2 years years	This procedure is generally applicable. Discretion is required regarding the degree to which all requirements are inspected against as the severity of an emergency at a disposal site is much less than that at an operating mill, or other fuel cycle facilities.	Every 2 Every 2 years years	The fire protection and prevention program must be inspected. The frequency and depth of inspection depend on the type of facility and the methods of reclamation.
88104	Decommissioning Inspection Procedure for Fuel Cycle Facilities	N/A N/A	N/A	Every Every Inspection Inspection	Portions of this procedure are applicable to mill and disposal sites, but IP 88XXX is specific for uranium mill sites.
92701	Follow-up	As As Necessary Necessary	This procedure is generally applicable.	As As Necessary Necessary	This procedure is generally applicable.

TABLE 2 - INSPECTION PROCEDURES APPLICABLE TO INSPECTION OF A URANIUM MILL SITE OR 11e.(2) BYPRODUCT MATERIAL DISPOSAL SITE DURING OPERATIONS AND CLOSURE

OPERATIONS PHASE CLOSURE PHASE

Procedure Number	Procedure Title	Inspection Frequency Minimum Normal	Applicability of the Procedure	Inspection Frequency Minimum Normal	Applicability of the Procedure
92702	Follow-up on Corrective Actions for Violations and Deviations	As As Necessary Necessary	This procedure is generally applicable.	As As Necessary Necessary	This procedure is generally applicable.
90703	Follow-up of Confirmatory Letters	As As Necessary Necessary	This procedure is generally applicable.	As As Necessary Necessary	This procedure is generally applicable.
93001	OSHA Interface Activities	As As Necessary Necessary	This procedure is applicable.	As As Necessary Necessary	This procedure is applicable.
XXXXX	In-Situ Leach (ISL) Facilities Program	Annual Twice per Year	Applicable to the operating aspects generic to uranium mills and in-situ leach facilities.	Annual Twice per Year	Applicable to the closure aspects generic to uranium mills and in-situ leach facilities.
88XXX	Decommissioning Inspection Procedure for Uranium Mills	N/A N/A	N/A	As As Necessary Necessary	This procedure is applicable in its entirety.

NRC INSPECTION MANUAL NMSS/URB

INSPECTION PROCEDURE 87654

URANIUM MILL SITE DECOMMISSIONING INSPECTION

PROGRAM APPLICABILITY: 2801

87654-01 INSPECTION OBJECTIVES

To determine if licensed decommissioning programs are being conducted in accordance with Nuclear Regulatory Commission requirements specified in individual licenses and the regulations. To provide assurance that uranium mill site decommissioning activities are being performed appropriately to demonstrate compliance with the decommissioning regulations and guidelines, and in accordance with the approved reclamation plan. This procedure supplements Inspection Procedure (IP) 88104 and provides details specific to decommissioning uranium mill sites. This procedure is also applicable to 11e.(2) byproduct disposal sites licensed by the NRC that are not associated with a uranium mill; however, the inspector should confirm the regulatory requirements for the site as indicated in the site license.

87654-02 INSPECTION REQUIREMENTS

A determination of compliance with NRC requirements will be based on direct

observation of work activities, interviews with workers, demonstrations by workers performing tasks regulated by NRC, independent measurements of radiation conditions at the facility, and review of licensee records. The inspector should refer to Inspection Manual Chapters (IMCs) 2602, 2605, and 2801 for general policies and guidance.

The scope of the inspection of licensed activities will be commensurate with the scope and status of the licensee's decommissioning program and with previous inspection efforts. A primary decommissioning activity to be addressed is soil cleanup and cleanup verification to demonstrate compliance with Criterion 6(6) of 10 CFR Part 40, Appendix A (most mill buildings are buried in the disposal cell). However, inspection of the implementation of other radiological decommissioning requirements in Criterion 6, such as measurement of radon flux and gamma levels from the disposal cell cover, may be necessary and should be coordinated with the Headquarters health physicist. Ground-water compliance will be evaluated against Criteria 5B, 5C, 5D, 5E, 5G, and 13. Surface reclamation (includes disposal cell construction) compliance will be evaluated against Criteria 4 and 6, and is discussed in Inspection Procedure (IP) 88001. Applicable portions of 10 CFR 40.42, such as the requirements for timely decommissioning, may need to be addressed, therefore the NRC Project Manager should be consulted when the site inspection plan is being developed.

This IP should be used as a checklist when developing a site-specific decommissioning inspection plan. The decommissioning inspection plan should not duplicate the normal inspection for radiation protection and environmental monitoring, but emphasize observation of key decommissioning activities being performed. If possible, implementation of this procedure should be initiated early in the decommissioning phase, to identify any program deficiencies and to gain confidence in the licensee's performance.

02.01 Preparation. The inspector should allow adequate time to prepare for the inspection. Preparation will include reviewing documents, making travel arrangements, coordinating with appropriate staff, notifying appropriate State agencies, and selecting necessary equipment. In particular, the inspector shall identify whether any license amendments have been issued since the last inspection, or whether the licensee has informed NRC of any major program changes since the last inspection. The inspector shall also review any event files to determine if the licensee had any incidents or events since the last inspection.

02.02 Entrance Briefing. When the inspector arrives at the licensee's facility, he/she will inform an available senior management representative of the purpose and scope of the inspection.

02.03 General Overview

a. Organization. Interview cognizant licensee representatives about the current organization of the program. Examine the licensee's organization with respect to changes that have occurred in personnel, functions, responsibilities and authorities since the previous inspection. Identify the reporting relationship and management structure between the licensee's executive management and the Radiation Safety Officer (RSO).

b. Scope of Program. Interview cognizant personnel to determine the scope of licensed activities, site status, staff size, etc.

c. Management Oversight. In the course of interviewing cognizant personnel, determine if management oversight is sufficient to provide the licensee staff with adequate resources and authority to administer the licensed program.

1. RSO - Determine whether the RSO has sufficient authority, and fulfills the appropriate duties commensurate with the size and scope of licensed activities.

2. Audits - Verify that audits are performed as required. Verify that the results of the audit are reviewed and addressed.

3. Determine that individuals who perform and/or supervise licensed activities are qualified and perform an appropriate level of supervision, as required by the license or regulations.

d. Decommissioning Activities. The inspection should be scheduled so that decommissioning activities can be observed, unless it is to be the final decommissioning inspection (after the Final Survey Report submitted and reviewed). Licensee decommissioning staff should be interviewed and relevant records on decommissioning activities reviewed.

e. Site Orientation Tour. A brief site tour should be made. General observations should be noted on the condition of the facility and the licensed activities being performed.

02.04 Equipment and Procedures. Review the equipment and procedures used for decommissioning the site to determine if appropriate and approved equipment and methods were followed.

02.05 Final Survey. Verify the accuracy and reliability of the licensee's final survey data by reviewing the methods used and the final survey data.

02.06 Quality Assurance/Quality Control. Verify the adequacy of the licensee's quality assurance and control program.

02.07 Data Reduction and Management. Verify the way field data is documented and processed.

02.08 Personnel Training. Verify that appropriate training and instructions were/are given. Through discussions with workers, verify that licensee personnel understand and implement the established decommissioning procedures.

02.09 Confirmatory Survey. The survey by the inspector should include gamma scans (and alpha scans if applicable) and soil analysis using methods similar to those approved for use by the licensee. The inspector's survey data is used as an indication of whether or not the licensee properly implemented the approved procedures and complied with the decommissioning criteria.

02.10 Ground Water. Verify that the ground-water monitoring and/or corrective program is being conducted (1) in compliance with Appendix A of 10 CFR 40 and (2) as required by applicable license conditions. Verify that the ponds are being monitored for leakage into the ground water as required by applicable license conditions.

02.11 Exit Meeting. When the inspection is over, there should be an exit meeting with the most senior licensee representative present, to discuss the preliminary inspection findings.

02.12 Post-Inspection Actions. After the inspection, the inspector shall summarize the findings with his/her supervisor. The inspector shall also contact Headquarters staff when any pertinent issues are raised during the inspection, when inspection findings impact on any licensing actions, or to give feedback on how the licensee has addressed recent licensing actions.

The inspection report should document what activities were observed, summarize the interviews with licensee personnel, and clearly indicate the evaluation of the licensee's decommissioning program.

87654-03 INSPECTION GUIDANCE

03.01 Preparation. Before the inspection, the inspector should be familiar with the guidance listed in the Appendix of this IP and a review of the following should be performed.

a. Operating History. Review the history of each license to identify what types of work activities were performed, the types of buildings that existed, and the geographical location of each. Review the results of past operational radiological surveys that were used to demonstrate radiological control of the uranium mill.

b. Waste Disposal Practices and Radioactivity Releases. Verify waste disposal outside the tailings cell. Consider the potential for, or evidence of, contamination from spills, or other releases of radioactive material (such as haul routes) to compare with the soil cleanup boundary.

c. Environmental Monitoring Data. Verify operational soil sampling, airborne emissions, and ground-water monitoring data, specifically for evidence of radiological contamination. Verify effectiveness of effluent controls, particularly during drying and packaging operations, and when air was exhausted from the yellowcake stack. Determine area where airborne contamination would likely be deposited.

d. Results of Previous Surveys. Verify the results of scoping, characterization, and remedial action support (excavation control) surveys performed by the licensee. Review the results of previous surveys for justification of the classification of mill site areas (e.g., mill site boundaries versus windblown areas). In particular, review data for the areas adjacent to the remediation of windblown contamination.

e. Remedial Actions. Review the specific procedures that were used to decontaminate the process facilities and/or land areas. Consider the potential for incomplete remediation based on these remedial action techniques, particularly the potential for the remedial actions to produce areas of localized contamination within verification grids that were not represented in the gamma scan average value. Determine if the licensee has identified the need to remediate radionuclides other than radium-226 (Ra-226),(e.g., beneath acidic raffinate ponds) where thorium-230 (Th-230) could migrate farther than Ra-226 or where uranium ore residue or yellowcake contamination could be located.

f. Guidelines Established. Review the guidelines that the licensee is using for indoor and outdoor areas and verify how the stated guidelines are being implemented;(e.g., use of surrogate measurements, presence of multiple contaminants, averaging conditions, and hot spots).

g. Records. Review the site's previous inspection history, license conditions, and licensee's submittals concerning decommissioning, and the Technical Evaluation Reviews for the related amendments, to be aware of follow-up inspection items, commitments made by the licensee, and assumptions or conclusions, made by licensing staff, related to decommissioning.

h. Background Reference Areas. Identify the value that NRC licensing staff approved as the site Ra-226 soil background. Determine if any recent information might require a review of the background value to determine that its use for soil cleanup is adequate to protect long-term health and safety (e.g., soil cleanup extended into background locations).

03.02 Entrance Briefing. No specific guidance required.

03.03 General Overview. No specific guidance required.

03.04 Equipment and Procedures. The inspector shall verify the gamma surveys done by the licensee by reviewing the following:

a. Instruments. Review the basis for the selection of instruments (e.g., based on potential contaminants and their associated radiations, types of media (soil, sludge, etc.) to be verified, and detection sensitivities). Typically, sodium iodide (NaI) scintillation detectors are used for land area surveys.

b. Sensitivity. Review documentation pertaining to instrumentation sensitivity, particularly licensee statements to the effect that instrumentation will be sufficient to detect radiological contamination. The detection sensitivity should be below the appropriate guideline values. Also, verify the instrument scan sensitivity for exterior scan surveys (NUREG-1575, Section 6.4). Check the scan sensitivity in terms of the gamma soil cleanup guideline.

c. Gamma-Radium Correlation. Confirm that the licensee checked the correlation of Ra-226 concentration to gamma levels during verification, and that an acceptable correlation was obtained.

d. Methods. Verify the methods/procedures for exposure rate measurements and gamma scans, unless these were reviewed with the Reclamation Plan. If possible, observe if the measurements and scans are performed according to the procedures and good health physics practices, such that reliable data are produced.

e. Calibration. Verify the procedures for instrument calibration; (e.g., use of appropriate radionuclide calibration sources, source geometry, and appropriate consideration of environmental conditions). Check the calibration date of survey meters.

f. Check-out. Review the operational check-out of survey instrumentation. Verify frequency of operational checks (both to calibration source and background) and if instrument response fell within predetermined acceptance criteria.

The inspector should verify the surface scans of buildings and equipment by reviewing the following:

a. Instruments. Review the basis for the selection of instruments; (e.g., based on potential contaminants and their associated radiations, surface types to be verified, and detection sensitivities). Typically, Geiger Muller, gas proportional, or zinc sulfide detectors are used for building surface contamination surveys. Verify the energy dependence of the measurement instrument and determine if the licensee has appropriately addressed this issue. Remember that beta detectors are more sensitive to for "old" yellowcake than alpha detectors.

b. Sensitivity. Review documentation pertaining to instrumentation sensitivity, particularly licensee statements to the effect that instrumentation will be sufficient to detect radiological contamination. The detection sensitivity should be below the appropriate guideline values. Verify the instrument scan sensitivity for both the interior and exterior scan surveys of building surfaces (NUREG-1575, Section 6.4).

c. Equations. Review the licensee's minimum detectable contamination equation for direct measurements on building surfaces and the conversion of counts to activity (should use the 4 efficiency factor).

d. Calibration. Verify the procedures for instrument calibration, e.g., appropriate radionuclide calibration sources, source geometry, and appropriate consideration of surface and environmental conditions.

e. Methods. Verify the method for exposure rate measurements, unless it was part of the Reclamation Plan. Normally, measurements are done 1 meter (3 feet) from the floor and at least 1 meter (3 feet) from a corner.

f. Check-out. Review the operational check-out of survey instrumentation. Verify frequency of operational checks (both to calibration source and background) and if

instrument response fell within predetermined acceptance criteria.

03.05 Final Survey. The inspector should verify the level of survey coverage for structures and land areas, based on the area classification (e.g., mill site or windblown area; affected or unaffected). The inspector should review the licensee's procedures for performing surface activity measurements and scans on building surfaces, for performing soil sampling, and ground-surface scanning. When possible, the inspector should observe implementation of the procedures to determine if the procedure is followed and performed in a manner reflecting good health physics practices. In particular, review the following:

a. Measurements. Determine whether the type, location, and number of measurements and/or samples per area are sufficient to provide a good representation of the radiological contamination. NUREG/CR-5849 should be consulted for general guidance.

b. Boundaries. Ensure that the boundaries of the windblown areas have been appropriately determined (review gamma data and perform spot-check gamma scans), and that any potential subsurface radioactive material deposits have been addressed.

c. Follow-up. Determine the use of investigation levels for measurements results and if the licensee performed appropriate follow-up actions. For example, soil samples should be collected if the NaI scintillation detector readings exceed a specified investigation level.

d. Sample and Analytical Procedures. Verify the licensee's sample collection and preparation techniques and equipment; (e.g., mixing, drying, geometries used for gamma spectrometry on soil samples, ingrowth period for Ra-226 progeny, etc.). Review the licensee's analytical procedures for radiological analyses, particularly the analysis of soil samples by gamma spectrometry. If a contract laboratory was used, those procedures should be available for review, including sample chain-of-custody procedures.

e. Meters. Review the protocol the licensee uses to interpret the gamma spectrometry results, particularly the radionuclide peaks used to identify various contaminants. Check for drift checks, energy calibration, control charts, duplicate sample counts, split samples with outside laboratory, etc. Determine whether the survey meters and gamma spectrometer are maintained and operated in accordance with the manufacturer's recommendations and good health physics practices.

f. Replaced Data. Review survey results for those areas where additional investigations have been conducted. If initial survey data have been replaced or supplemented as a result of the investigation, ensure that the replacement data are annotated in the final report. The annotation is intended to alert the reviewer that

the initial data have been replaced.

g. Survey data. Select a portion of completed survey data and review data for compliance with procedures and final survey plan. Review the documentation for scan surveys to determine how the licensee identified and investigated any elevated readings during the scan survey. Review survey results for specific processing areas that have been remediated, including buried raffinate lines, evaporation ponds, etc. Determine if results demonstrate compliance with guidelines and whether any modifications to the general survey approach were necessary.

03.06 Quality Assurance/Quality Control

a. Laboratory. Review the licensee's on-site laboratory and/or licensee's contracted off-site laboratory quality assurance/quality control procedures, including duplicates, blanks, and matrix spikes. Determine the frequency of analysis for each of the quality control (QC) checks. Determine whether the laboratory participates in cross-check of performance evaluation programs, such as those offered by the Environmental Monitoring Laboratory and the U.S. Environmental Protection Agency.

b. Final Data. Review the final survey report data and discuss with the Headquarters health physicists, to ensure that the items listed below are adequately addressed either in the report or in the licensee's records:

1. QC sampling and direct measurements, along with associated acceptance criteria and corrective actions.

2. Verification of survey measurement data (i.e., data quality assessment to determine adequacy of the collected data, for the intended use). Examples of data quality assessment include verification that the collected data are applicable to the statistical model used to reduce the data, and other data quality indicators, including completeness, comparability, representativeness, precision, and accuracy.

3. Testing of computer calculations by manual calculation.

03.07 Data Reduction and Management

a. Program Review. Perform a program review to determine if the licensee has set up a data reduction process with criteria stated in procedures, and if the licensee's computer software has data reduction features in the analysis, counting, and data

reporting.

b. Spot Check. Select a completed survey data package, the data reduction procedure, and verify implementation by performing the data reduction process under the direction of the licensee.

1. Trace the path of data from their generation in the field or laboratory, to their final use.

2. Review any checklist forms used for preventing loss of data during data reduction.

3. Ensure that data reduction analysis information are reflected in the final survey results.

03.08 Personnel Training. Review the qualifications and training for survey technicians and other project personnel. If possible, question technicians about their knowledge of procedures and the frequency or detail of their training.

03.09 Confirmatory Survey. Verify the need for a confirmatory survey based on the criteria in IMC 2801. A confirmatory survey by the inspector and/or NRC contractor should only be necessary if there is significant doubt regarding the licensee's final survey results. The extent of the survey (e.g., gamma survey and soil analysis) should be determined with input from the Headquarters health physicist who reviewed the Final Survey Report. Confirmatory analysis of archived soil samples may be included.

03.10 Ground Water. Verify that ground-water quality data were collected at the correct locations and frequency, as required by the license (NRC-approved radiological environmental monitoring program), were analyzed for the right constituents, and were verified to make a determination against established detection or compliance standards, as appropriate. Confirm that if ground-water quality data indicated detection or compliance standards (including compliance standards set by Alternative Concentration Limits) were exceeded, that the licensee appropriately notified NRC and took appropriate sampling and, if necessary, corrective actions. Visually verify that compliance wells are correctly located with respect to the most recent NRC-approved locations. If applicable, verify that ground-water corrective action programs were conducted in a timely manner. Also, verify that wells and boreholes that must be sealed under the approved reclamation plan, were correctly sealed and abandoned.

Visually verify that: (1) there are no failures or breaks in impoundment embankments, (2) that there are no obvious tears in impoundment liners, and (3) that there are no springs and seeps around impoundment embankments. If applicable, visually verify that the impoundment leak-detection and impoundment water-level monitoring systems are in place and operational. Verify that the licensee is conducting the appropriate level of visual inspections of impoundment integrity. If applicable, verify that the impoundment leak detection system is being monitored at an appropriate frequency and for the correct indicator parameters. Verify that appropriate monitoring, cleanup, corrective actions, and regulatory notifications were taken when impoundment fluids were found in the impoundment ground-water leak-detection system.

03.11 Exit Meeting. When the inspection is over, there should be an exit meeting with the most senior licensee representative present at the facility (see IP 30703 for details). If a senior management representative is unavailable for the exit meeting, the inspector may hold a preliminary exit meeting with appropriate staff on site.

03.12 Post Inspection Actions. The inspector will review his or her inspection findings with his or her supervisor and discuss violations, items of concern, and unresolved items in sufficient depth for management to make appropriate decisions regarding enforcement actions, referral to other State and Federal agencies, and decisions on the scheduling of future inspections of the licensee's facility.

The inspector should also discuss inspection findings with the appropriate Headquarters staff to inform the staff about how the licensee has addressed (or failed to address) special license amendments or recent licensing actions. Licensing information requested by the licensee should also be discussed with the Headquarters staff.

Inspectors should be aware that NRC has entered into several memoranda of understanding, with other Federal agencies, that outline agreements on items such as exchange of information and evidence in criminal proceedings. The inspector should ensure that the exchange of information relevant to inspection activities is made in accordance with the appropriate memorandum of understanding.

87654-05 REFERENCES

The following NRC IMCs and related IPs should be used for guidance, in part, for the

decommissioning inspection:

- IMC 1230 "Quality Assurance Program for Radiological Confirmatory Measurements"
- IMC 2602 "Decommissioning Inspection Program for Fuel Cycle Facilities and Materials Licensees"
- IMC 2605 "Decommissioning Procedures for Fuel Cycle and Materials Licensees"
- IMC 2801 "Uranium Mill and 11e.(2) Byproduct Material Disposal Site and Facility Inspection Program" [revised August 1997]
- IP 30703 "Management Entrance/Exit Interview"
- IP 88001 "Construction Review"
- IP 88104 "Decommissioning Inspection Procedure for Fuel Cycle Facilities"

Applicable portions of the following NRC documents should be used for guidance:

- Draft BTP "Site Characterization for Decommissioning" November 1994, NRC, NMSS/DWM
- NUREG-1505 "A Nonparametric Statistical Methodology for the Design and Analysis of Final Status Decommissioning Surveys" Draft, August 1995 (only Section 4)
- NUREG-1506 "Measurement Methods for Radiological Surveys in Support of New Decommissioning Criteria" Draft, August 1995 (Sections 2 to 4)
- NUREG-1507 "Minimum Detectable Concentrations with Typical Radiation Survey

Instruments for Various Contaminants and Field Conditions" Draft, August 1995

- NUREG-1575 "Multi-Agency Radiation Survey and Site Investigation Manual (MARSSIM)" Draft, December 1996 (particularly Sections 5.5 and 6.0)

- NUREG/CR-5849 "Manual for Conducting Radiological Surveys in Support of License Termination" Draft 1992

- NUREG/BR-0241 "NMSS Handbook for Decommissioning Fuel Cycle and Materials Licensees" March 1997

END