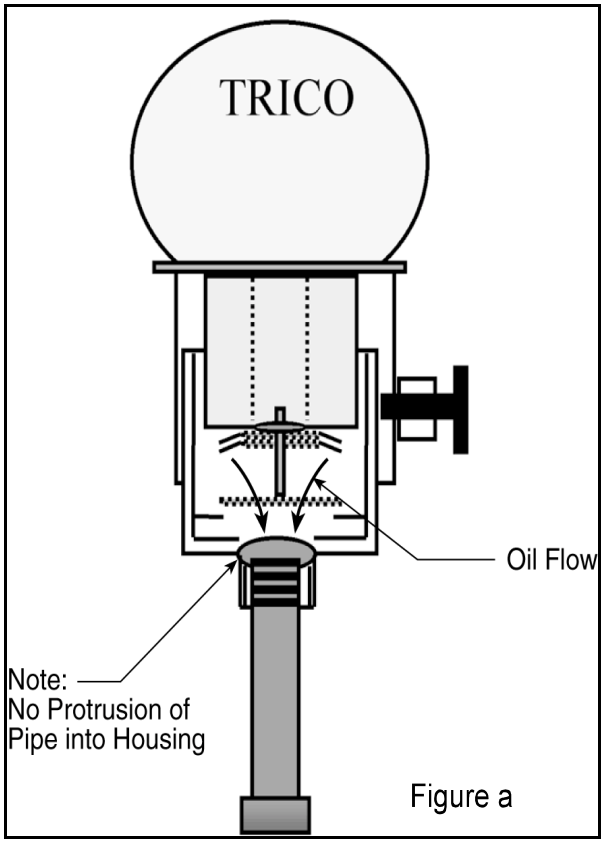

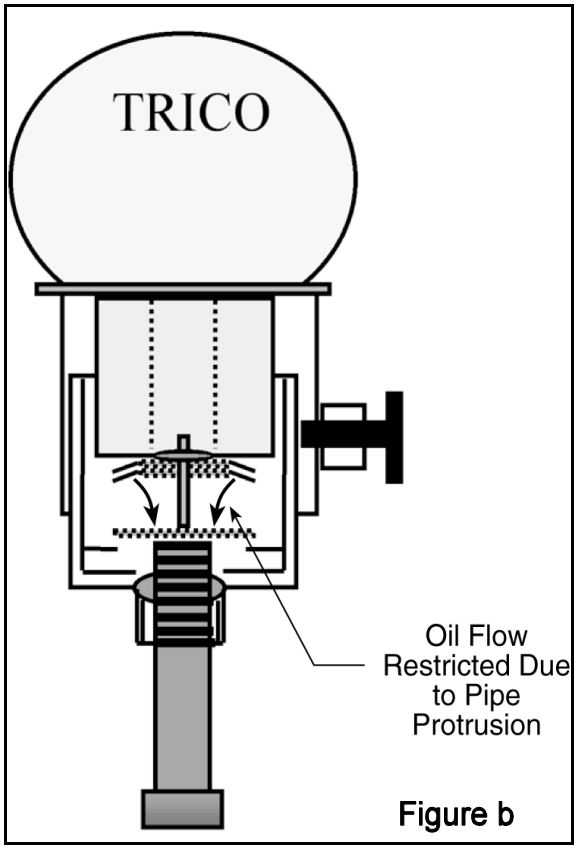

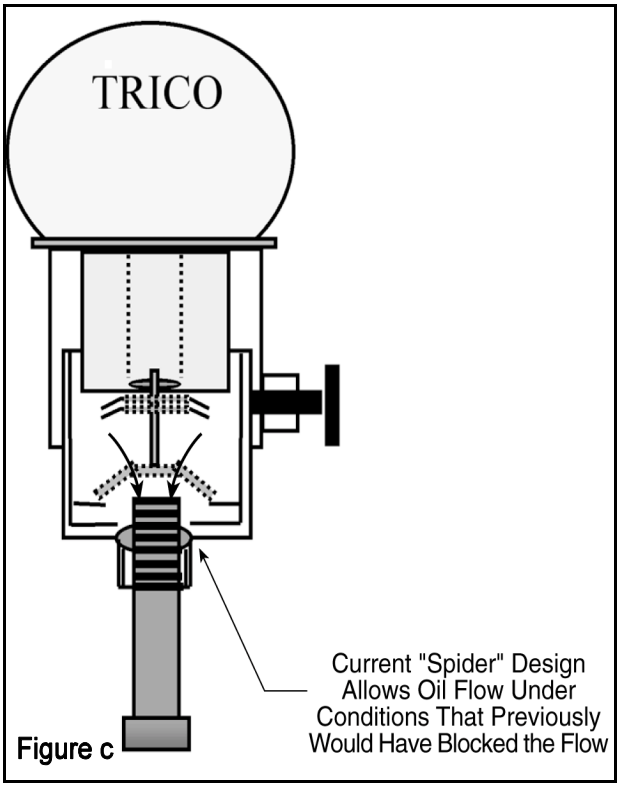

Trico Opto-Matic Oil Bubbler