UNITED STATES
NUCLEAR REGULATORY COMMISSION
WASHINGTON, D.C. 20555-0001

October 19, 2001

MEMORANDUM TO: Mark Satorius, Chief
Performance Assessment Section
Inspection Program Branch
Division of inspection Program Management
Office of Nuclear Reactor Regulation

FROM: August K. Spector, Communication Task Lead
Inspection Program Branch
Division of Inspection Program Management
Office of Nuclear Reactor Regulation

SUBJECT: REACTOR OVERSIGHT PROCESS SPECIAL MEETING ON REVISING NEI-99-02 REV 1 AND ROP TOPICS

On October 17 and 18, 2001 a public meeting was held at the NRC Headquarters, Two White Flint North, Rockville, MD to discuss and review the NEI 99-02-REV 1. An attendance list, and information exchanged at the meeting are attached.

Attachments:

1. Agenda
2. List of Participants
3. NRC/Industry Working Group Meeting on SSU September 13, 2000 Proceedings
4. Performance Indicator
5. Industry Trends Program Plans
6. Data Example
7. Mitigating Systems Cornerstone
8. NRC Issue Summary 2001-## Resetting Fault Exposaure Hours for SSU PI
9. Regulatory Assessment Performance Indicator Guideline (NEI 99 02 Revision 2) DRAFT November 2001

cc: John W. Thompson, NRR/IIPB

October 19, 2001

MEMORANDUM TO: Mark Satorius, Chief
Performance Assessment Section
Inspection Program Branch
Division of inspection Program Management
Office of Nuclear Reactor Regulation

FROM: August K. Spector, Communication Task Lead
Inspection Program Branch
Division of Inspection Program Management
Office of Nuclear Reactor Regulation

SUBJECT: REACTOR OVERSIGHT PROCESS SPECIAL MEETING ON REVISING NEI-99-02 REV 1 AND ROP TOPICS

On October 17 and 18, 2001 a public meeting was held at the NRC Headquarters, Two White Flint North, Rockville, MD to discuss and review the NEI 99-02-REV 1. An attendance list, and information exchanged at the meeting are attached.

Attachments:

1. Agenda
2. List of Participants
3. NRC/Industry Working Group Meeting on SSU September 13, 2000 Proceedings
4. Performance Indicator
5. Industry Trends Program Plans
6. Data Example
7. Mitigating Systems Cornerstone
8. NRC Issue Summary 2001-## Resetting Fault Exposaure Hours for SSU PI
9. Regulatory Assessment Performance Indicator Guideline (NEI 99 02 Revision 2) DRAFT November 2001

cc: John W. Thompson, NRR/IIPB

DISTRIBUTION:
NRC File Center IIPB r/f PUBLIC

Accession # Template
To receive a copy of this document, indicate in the box: "C" = Copy without enclosures "E" = Copy with enclosures "N" = No copy

OFC:	DIPM/IIPB					
NAME:	ASpector					
DATE:	10/19/01					

OFFICIAL RECORD COPY

AGENDA

SPECIAL TWO-DAY PUBLIC MEETING ON REVISING NEI 99-02, REV 1 AND ROP TOPICS

October 17 & 18, 2001

Day 1: OWFN 06B4

8:00 a.m.	Welcome & confirm agenda	John Thompson
8:15 a.m.	Review and approval of FAQs	John Thompson Don Hickman
9:00 p.m.	Discussion of a concurrent pilot and pilot criteria of the recent proposed changes to the existing SSU PI (four systems plus two new systems) and new definition of SSU.	Don Hickman
10:00 p.m.	Discussion of RIS for the initiating events unplanned scrams replacement PI	Don Hickman
11:00 a.m.	Discussion of pilot program and RIS for the new mitigating systems PI on safety system reliability (six safety systems PIs)	Don Hickman
12:00 p.m.	lunch	
1:00 p.m.	Discussion of protocol for the mitigating systems safety System unavailability fault exposure hours reset on web	Ron Frahm
1:30 a.m.	Discussion of draft RIS and content of NEI 99-02 rev 2	John Thompson
4:00 p.m.	adjorn	

Attachment 1

AGENDA

SPECIAL TWO-DAY PUBLIC MEETING ON REVISING NEI 99-02, REV 1 AND ROP TOPICS

October 17 & 18, 2001

Day 2: TWFN T8A1

8:00 a.m.	Welcome & confirm agenda	John Thompson
8:15 a.m.	Continue discussion of NEI 99-02, rev 2 (if necessary)	John Thompson
10:00 a.m.	Discussion of proposed changes to IMC 0305, "Operating Reactor Assessment Program"	Bob Pascarelli
10:30 a.m.	Discussion the reactor oversight process industry trends	Tom Boyce
11:15 a.m.	Discussion of proposed changes to IMC 0610*	Tom Foley
12:00 a.m.	lunch	
1:00 p.m.	Discussion of significance determination process issues	Peter Koltay
	a. EP SDP	Randy Sullivan
	b. IMC 609, Attachment 1 SERP and appeal issues	Peter Koltay
3:00 p.m.	Adjourn	

NRC Public Meeting
Reactor Oversight Process
List of Participants
Sept. 26, 2001

D. Hickman, NRC.
M. Satorius, NRC
T. Houghton, NEI
R. Ritzman, PSEG
J. Thompson, NRC
T. Pickens, NMC
M. Taylor, Exelon
S. Alexander, NRR
W. Warren, SN
K. Heffner, Progress E
S. Ferrel, TVA
C. Seaman, Arizona PS
J. Sumpter, NPPD
S. Ketelsen, Pacific GE
G. Gibson, SoCal.
A. Halliday, Entergy
H. Hamzehee, NRC
T. Boyce, NRC
M. Maley, NRC
S. Sanders, NRC
R. Pascarelli, NRC
M. Vonn, Exelon
A. Nelson, NEI
P. Koltay, NRC
M. Johnson, NRC
K. Gibson, NRC
R. Sullivan, NRC
S. Floyd, NEI

Attachment 2

NRC/INDUSTRY WORKING GROUP MEETING
ON SAFETY SYSTEM UNAVAILABILITY
September 13, 2000

PROCEEDINGS

Approved minutes of the July 13, 2001, meeting with clarifications, additions, updates, and new issues from the August 16, 2001, meeting:

1. The systems monitored for unavailability under the SSU performance indicator (PI) of the reactor oversight process (ROP) will be defined for all plants. The risk-significant functions of those monitored systems will be predetermined. The criteria for selecting and defining those risk-significant functions will be the criteria that are used in classifying structures, systems, and components (SSCs) within the scope of 10 CFR 50.65, the Maintenance Rule (MR), as high-safety-significant (HSS) or low safety significant (LSS), as this process is described in the latest effective revision of the industry guidance for MR implementation, Nuclear Energy Institute (NEI) publication, NUMARC 93-01 (Revision 3), as endorsed by Regulatory Guide (RG) 1.160*.

*Note that the current effective revision of RG 1.160 endorses NUMARC 93-01, Revision 2 and that RG 1.182 endorses the revised Section 11 of NUMARC 93-01 for 10 CFR 50.65(a)(4) implementation. However, as NUMARC 93-01, Revision 3 incorporated the revised Section 11, an upcoming Revision 3 to RG 1.160 will endorse Revision 3 to NUMARC 93-01.

Item 1 Clarification (8/16): Note that while the monitored systems used in the SSU PI will be the same for all plants, the corresponding risk/safety-significant functions will be plant specific and hence may vary somewhat among plants. These functions should be identified before the commencement of the pilot program *and documentation thereof should be available for onsite inspection.*

Item 1 (9/13 update): Add to the last sentence: "...and documentation thereof should be available for onsite inspection."

2. The key performance parameters and their acceptable values (maximums, minimums, ranges, etc., as appropriate, also called functional success criteria) for determining unavailability for PI purposes (and perhaps also eventually for the MR and other uses of SSU) will also be predetermined for each plant (or at least each plant type). The selection of these values will be based on a combination of deterministic engineering analysis and existing risk insights. ~~Allowance will be made for some~~ Real-time analysis of degraded SSC performance or conditions not addressed by, but that may affect, one or more predetermined key parameters will be allowed (examples to be provided in guidance document). However, limitations may be placed on the time and effort that is expended in performing such analyses. ~~that does not fit the predetermined key parameters.~~ *"The guidance will contain templates and examples to aid in establishing the plant-specific functional success criteria."*

Item2 (9/13 change): Add to Item2: "The guidance will contain templates and examples to aid in establishing the plant-specific functional success criteria."

Attachment 3

Item 2 Clarification (8/16): Add to the last sentence: "... not addressed by, but that may affect, one or more predetermined key parameters will be allowed (examples to be provided in guidance document). However, limitations may be placed on the time and effort that is expended in performing such analyses."
Item 2 Addition (8/16): For degraded conditions directly involving one or more predetermined key parameters, unavaliable hours will be charged in accordance with the existing guidance; no relief will be given for additional margin discovered in after-the-fact engineering analysis. However, credit for such additional margin may be taken for future determinations of unavaliable hours. *The guidance document will contain the provisions to govern the treatment of re-analyzed SSU for future SSU determinations."*

Item 2 (9/13 change): Add to Item 2 (8/16 addition): "The guidance document will contain the provisions to govern the treatment of re-analyzed SSU for future SSU determinations."

3. As part of the normalization of SSU for commonality among the several user programs, the task group resolved that shutdown hours will be excluded from the SSU PI. Excluding shutdown hours from unavailability for MR purposes will require further discussion.

Item 3 Addition (8/16): *With respect to excluding shutdown hours for maintenance rule (MR) purposes, three issues remain:*
(a) Is there a regulatory impediment explicit or clearly implied in the MR statements of consideration?
(b) What is the extent of cases in which sufficient backup SSCs/trains are not available?
(c) Are there licensees who cannot justify excluding shutdown hours because the basis for their MR unavailability performance criteria included significant shutdown required hours and significant shutdown unavailable hours historically?

Item 3(a) (9/13 change): OGC will be asked to make a determination whether the statement of considerations (SOC) for the Maintenance Rule (MR) implies a regulatory requirement for counting SSU during shutdown.

Note: Subsequent to the 9/13 meeting, OGC took the position that the regulation, while clearly applicable during shutdown, requires monitoring performance or condition of SSCs; whereas it is the SOC that defines performance in terms of reliability and availability. Therefore, interpretation of the MR itself is moot. However, OGC recognized that the SOC clearly implies that both reliability and availability together provide the best measure of performance; and in the (a)(4) edition of the SOC, the link to shutdown is even stronger, yet stops short of being explicit. Therefore, it appears that counting unavailable hours (when the SSC is required) during shutdown, at least for HSS SSCs, was the understanding or expectation of the Commission.

Accordingly, if the Staff is considering administering the MR (or allowing its implementation) in a manner that may be inconsistent with the Commission's original understanding and expectation, the Staff will need to inform the Commission of the motivation, justification, and enabling circumstances for the apparent deviation and ensure the Commission has no objections. In fact, the insights obtained in the pilot program should help the Commission to make a much better informed decision on the

matter. IQPB will undertake to obtain a ruling from the Commission on their current expectation in this regard.

Items 3(b) and 3(c): The study to determine the ability to neglect shutdown SSU for MR purposes will consist of pilot program experience plus an historical review.

4. It has been proposed that ~~estimated~~ fault exposure hours ~~(t/2)~~ resulting from demand failures ~~(i.e., one half the time since the last successful operation)~~ be excluded from the SSU PI and that, until reliability PIs are implemented, ~~single~~ demand-failure ~~t/2~~ events ~~of greater than 336 hours~~ be evaluated by means of the significance determination process (SDP). The purpose of this measure is to continue to be able to capture and characterize the safety/risk significance of ~~large~~ fault exposures revealed by demand failures while avoiding saturation and desensitization of the SSU PI. ~~Events resulting in fault exposure hours of less than 336 hours would not be captured either in the SSU PI or through the SDP process. This proposal will be discussed further at the next meeting.~~ *Licensees should continue recording and reporting demand-failure fault exposure time, but not include it in SSU PI calculations.*

Item 4 clarifications/additions (8/16): Interim Measures (until reliability PIs become available): The elimination of estimated fault exposure time (t/2) for demand-failures will be evaluated in terms of the impact on the staff of performing the anticipated substantial number of additional significance determination evaluations using the reactor safety SDP. Known demand failure fault exposure time (from the inception of the pre-existing degraded condition until discovery) will be considered for exclusion from MR UA. In the interim, the language of Item 4 will be changed as follows:
(a) Make deletions as indicated in item 4 above [in "strikeout"]
(b) Add: "Licensees should continue recording and reporting demand-failure fault exposure time, but not include it in SSU PI calculations."

Item 4 (9/13 update): The SSU Working Group agreed to replace Item 4 with NEI's demand-failure/SSU rules table (or the logic thereof expressed in paragraph form) modified or qualified as follows:

(a) The tables represent at-power treatment of demand failures and discovered conditions. If ultimately shutdown hours will be excluded from unavailability for MR purposes, then demand failures must be counted as such for the MR regardless of knowledge of exposure time.

Reason: If during shutdown, the unavailability of HSS SSCs is no longer to be considered for the MR, then the only performance measure left is reliability, but if that were not counted for a demand failure of known exposure time, then the demand failure wouldn't be counted at all, which is unacceptable for systems required to be available and reliable while the plant is shut down.

Item 4(b) The SDP used as a surrogate for t/2 in the interim (i.e., until new SSU and also unreliability PIs are established) will be employed without the need for an inspection finding regarding a performance issue. That is, the SDP is normally initiated only after a performance issue is screened through the questions of Appendix B to NRC Inspection Manual Chapter 0610* and is determined to be a finding worthy of using the

SDP. In the interim period, in this special case only, the SDP will be used as a demand-failure t/2 alternative without the usual preliminary screening being required.

Item 4(c): This will be reflected in IMCs 0609 and 0610* (and other documents) as required as it will be in Revision 2 to NEI 99-02 (to be issued in January 2002).

Item 4(d): Long-term treatment of demand failures with known exposure time (Line 1, Table 1) will require further evaluation.

5. Unavailability of the two most risk-significant support systems (not already reported under the PI), i.e., component cooling water (CCW) and service water (SW) or their equivalents, will be tracked and reported as separate SSU PIs under the ROP. Their unavailability will not be cascaded onto the unavailability of supported front-line systems. No other support system unavailability will be cascaded onto supported systems for PI purposes. Performance issues for these other support systems will continue to be evaluated using the SDP. In the meantime, licensees should continue to cascade support system unavailability onto supported systems in accordance with current guidance. There are no interim changes. ***No 8/16 or 9/13 changes.***

6. Crediting operator recovery actions (ORAs) in reducing unavailable hours charged will be allowed under the following circumstances:

a. For testing, the resolution adopted at the previous meeting stands, i.e., the ORA must meet the crediting criteria in NEI 99-02 and NUMARC 93-01.

b. For maintenance on *or malfunction of* auto-start functions where there is manual operation capability, the same crediting criteria will apply for ROP SSU PI purposes. However, where an auto-start function is a scoped function under the MR, crediting manual operation is not consistent with accurate tracking and trending of system or function for MR purposes; ~~therefore requiring further discussion~~ *unavailable hours will be charged for MR purposes on a case-by-case basis.*

c. Support system ORAs will be treated as in a. and b. above. ~~At the next meeting, NEI and NRC will propose additional criteria for discussion~~. *Interim only*

Item 6 Update (8/16): *Second sentence of 6.c now to read: "Additional criteria to be developed on a case-by-case basis." Other changes to Item 6 as indicated above by strikeout and italics.*

Item 6 9/13 Changes: Item 6(b) allows operator recovery actions (ORA) in the control room only to be credited in lieu of charging SSU for malfunctions. But for maintenance, local, dedicated operator recovery action as described in NEI 99-02 and NUMARC 93-01 may be credited. The guidance will make this distinction clear.

Item 6(c) - Interim only

7. Design deficiencies will be treated according to which of the two categories developed by OERAB (attached) they belong, as follows: (1) Category 1 design deficiencies will be treated as described in Item 4 above (t/2); (2) Category 2 design deficiencies will be evaluated by the SDP (until reliability PIs are implemented). ***Item 7 8/16 Update: No changes until final disposition of Item 4.***

Item 7 9/13 Changes: Item 7 is still to remain as written until the final disposition of Item 4 (long term). Also, treatment of Category 2 design deficiencies after reliability PIs are implemented requires further evaluation (e.g., whether SDP will still be used, or will they be covered by the reliability PIs).

8. Members were to present any concepts for threshold reevaluation and implementation they had developed. NEI's concept was a long-term measure (no interim), i.e., that thresholds would be plant specific and tied to the probabilistic risk analysis (PRA).
~~***Item 8 Update (8/16):*** *NEI's proposed threshold is now more specific: The SSU PIs will go from green to white if the unavailability results in an increase in core damage frequency (Δ CDF) of greater than or equal to 1.0 x 10^{-6}/reactor year.*~~

Item 8 9/13 Changes: Plant-specific (or any other) thresholds will not be set for the pilot program commencing in January 2002. Strike the 8/16 update to Item 8. Instead, NEI will evaluate a range of methodologies and select those to be used to establish risk-informed, plant-specific thresholds, consistent with SDP results, to be completed by September 2002 and implemented by January 2003.

At a preliminary meeting of the NRC staff members of the SSU Working Group on 10/16/2001, the need for addressing thresholds for the pilot plants themselves by the whole group was discussed. In particular it was proposed that the pilot plants develop their thresholds using their PRAs. It was further noted that the target date for completion NEI's threshold development methodology for the rest of the plants be moved up some to allow more time for development of the 36 thresholds and their review and verification by NRC using the SPAR model (Rev 3i).

9. There was a presentation on risk-based PIs (RBPIs).

10. Short-term data collection changes are to be implemented by January 1, 2002. The first data collected under the new interim guidance will be reported beginning April 21, 2002. The pilot program to test and evaluate long-term changes will begin January 1, 2002. Guidance for the pilot program will be issued by November 1, 2001.

Item 10 Update (8/16):
a. Interim Changes on Items 4, 6.c, and 7 by January 2002
b. Case Studies: FAQ Nos.: 15-12, 18-1, 18-2, 21-4, 23-1, and 23-2 to be presented at next meeting (9/13/2001) - Evaluation against interim and long-term measures
c. MR group positions on shutdown hours by 9/13/2001
d. Staff burden data from using SDP for demand failures in lieu of t/2 fault exposure time - 9/13
e. NEI to bring draft changes to 99-02 for interim and final measures on 9/26/2001
f. Incorporate feedback from the draft changes and other comments by 10/13/2001
g. Discussion of tentative changes 10/17
h. Proposed final revised document ready for RIS's by 10/31
i. Pilot plants selected by 10/31/2001
j. Final revision of document posted on NEI website by 11/01/2001
k. RISs to be issued by 11/15/2001

New Issue - Resolved that generic Letter 91-18 in general is not applicable to SSU PIs.

11. The next meeting of the SSU Task Group will be on ~~11:00 a.m. on August 16,~~ 9/13/2001.

12. Added 8/16: *New item for discussion: Treatment of apparently pre-existing degraded conditions, discovered by other than a demand failure, that would have caused the function to fail had there been a demand.*

Staff w/ rev.

2 PERFORMANCE INDICATORS

2.1 INITIATING EVENTS CORNERSTONE

The objective of this cornerstone is to limit the frequency of those events that upset plant stability and challenge critical safety functions, during shutdown[1] as well as power operations. If not properly mitigated, and if multiple barriers are breached, a reactor accident could result which may compromise the public health and safety. Licensees can reduce the likelihood of a reactor accident by maintaining a low frequency of these initiating events. Such events include Reactor Protection System (RPS) actuations due to turbine trips, loss of feedwater, loss of off-site power, and other significant reactor transients.

The indicators for this cornerstone are reported and calculated per reactor unit.

There are three indicators in this cornerstone:

- Unplanned RPS actuations per 7,000 critical hours
- Unplanned RPS actuations with a loss of normal heat removal per 12 quarters
- Unplanned Power Changes per 7,000 critical hours

UNPLANNED REACTOR PROTECTION SYSTEM ACTUATIONS PER 7,000 CRITICAL HOURS

Purpose

This indicator monitors the number of events or conditions that result in actuation of the reactor protection system (RPS) when the reactor is critical except when the actuation results from and is part of a pre-planned sequence during testing or reactor operation. It measures the rate of unplanned RPS actuations per year of operation at power and provides an indication of initiating event frequency.

Indicator Definition

The number of events or conditions that result in unplanned RPS actuations during the previous four quarters while critical per 7,000 hours

Data Reporting Elements

The following data are reported for each reactor unit:

- the number of events or conditions that result in unplanned RPS actuations while critical in the previous quarter

- the number of hours of critical operation in the previous quarter

Attachment 4

[1] Shutdown indicators are being developed and will be included in later revisions.

Calculation

The indicator is determined using the values for the previous four quarters as follows:

$$\text{value} = \frac{(\text{total events or conditions that result in unplanned RPS actuations while critical in the previous 4 qtrs}) \times 7{,}000}{(\text{total number of hours critical in the previous 4 qtrs})}$$

Definition of Terms

RPS actuation means the shutdown of the reactor by the rapid addition of negative reactivity through insertion of control rods.

Unplanned RPS actuation means that the RPS actuation was not an intentional part of a planned evolution or test as directed by a normal operating or test procedure. This includes RPS actuations that occurred during the execution of procedures or evolutions in which there was a high chance of an RPS actuation occurring but the RPS actuation was neither planned nor intended.

Criticality, for the purposes of this indicator, typically exists when a licensed reactor operator declares the reactor critical. There may be instances where a transient initiates from a subcritical condition and is terminated by a RPS actuation after the reactor is critical—this condition would count as a RPS actuation.

Clarifying Notes

The intent of this indicator is to count the number of events or conditions that result in actuation of the reactor protection system when the reactor is critical as reported to the NRC pursuant to 10 CFR 50.72 (b) (2) (iv) (B). Examples of events or conditions that can result in RPS actuations include:

Turbine Trip
Loss of Main Feedwater Flow
Loss of Normal Heat Sink (main condenser)
MSIV Closure
Loss of Offsite Power
Loss of Electrical Load (includes generator trip)
Excessive Feedwater (overcooling transient)
Loss of Auxiliary/Station Power
Small Loss of Coolant Accident (includes reactor/recirculation pump seal failures)
Loss of Service Water/Component Cooling Water
Loss of Vital AC/DC bus
Secondary/balance-of-plant Piping/Component Ruptures
Reactivity Control Anomaly (e.g., dropped or misaligned rod)
Other Initiators Leading to Automatic Actuation of Reactor Protection System
Unplanned shutdowns made in response to plant conditions in accordance with off-normal procedures (e.g., emergency procedures, abnormal operating procedures, alarm response

procedures, and unplanned shutdowns to avoid exceeding a technical specification action statement time limit)

The value of 7,000 hours is used because it represents one year of reactor operation at about an 80% capacity factor.

If there are fewer than 2,400 critical hours in the previous four quarters the indicator value is displayed as N/A because rate indicators can produce misleadingly high values when the denominator is small. The data elements are still reported.

Events or conditions that cause dropped rods (unless conditions cause a subsequent RPS actuation), single rod RPS actuations, or half RPS actuations are not considered reactor RPS actuations. (Rem Backs)

Anticipatory plant shutdowns intended to reduce the impact of external events, such as tornadoes or range fires threatening offsite power transmission lines, are excluded.

Examples of the types of events or conditions that result in RPS actuations that **<u>are included</u>**:

- RPS actuations that resulted from unplanned transients, equipment failures, spurious signals, human error, or those directed by abnormal, emergency, or annunciator response procedures.

- An RPS actuation that is initiated to avoid exceeding a technical specification action statement time limit.

- An RPS actuation that occurs during the execution of a procedure or evolution in which there is a high likelihood of an RPS actuation occurring but the RPS actuation was neither planned nor intended.

Examples of events or conditions that result in RPS actuations that **<u>are not</u>** included:

- RPS actuations that are planned to occur as part of a test (e.g., a reactor protection system actuation test), or RPS actuations that are part of a normal planned operation or evolution.

- Reactor protection system actuation signals that occur while the reactor is sub-critical.

- RPS actuations that occur as part of the normal sequence of a planned shutdown and RPS actuation signals that occur while the reactor is shut down.

- Plant shutdown to comply with technical specification LCOs, if conducted in accordance with normal shutdown procedures that include a manual RPS actuation to complete the shutdown.

Industry Trends Program Plans

10/18/01

I. Milestones and Schedule:

9/01	- Publish charts on external web - Complete 8/25/01
Early 02	- RES initial update of initiating events in NUREG-5750; publish on web
3/02	- Issue SECY on industry trends to support AARM
3/02	- Briefing at AARM; follow-on brief to Commission
Fall 02	- RES initial update of system and component reliability studies
FY02	- Develop risk-informed thresholds for PIs using SPAR models; potential implementation for FY03
12/02	- Possible first full FY report on ROP PI data with agency action on any adverse trends

Major Tasks (Discussed in SECY-01-0111):

1. **Develop risk-informed thresholds** - RES will use SPAR Rev 3i models that are currently available to develop risk-informed thresholds for PIs where this is possible. SRM on SECY-01-0111 dated August 2, 2001 stated that threshold development should be done "as soon as practicable." Unique issues for ex-AEOD PIs; ROP PIs (all cornerstones?); Initiating Events; Reliability & Unavailability Indicators; ASP results

2. **Update Initiating Events and Reliability Studies** - RES update in early CY02 and in CY03.

3. **Improved Industry Data Collection and Reporting** - NRC staff will continue to work with INPO to develop consolidated data collection and reporting. Reporting could include ROP PIs, industry PIs, and INPO/WANO indicators.

Other Issues

4. **Improved Strategic Plan Performance Measures and Charts** - Potential improvements to the NRC's Performance Accountability Report to Congress to show trends in indicators vice current high-level criteria with bistable response (i.e., zero deaths from radiation). Development over next 1-2 years.

5. **Merging of AEOD and ROP data for scrams and SSFFs** - Initial look shows close agreement for scrams, some differences for SSFFs. May need NEI to assist with licensee interface in resolution of differences. Possible improvements to reporting guidelines in NUREG-1022 and/or NEI 99-02 based on results.

Accomplishments since last briefing to NRC/industry meeting in August

Milestone: Publication of Industry Indicators on NRC external web

Other:

- Management-level agreement between RES and NRR on tasking
- Full funding on SPAR models - on schedule for all 70 models to be completed by end of FY02
- Technical work on thresholds and indicators in progress

Attachment 5

Mitigating Systems Cornerstone - Industry Trends

2Q/2001

Safety System Unavailability, Emergency AC Power

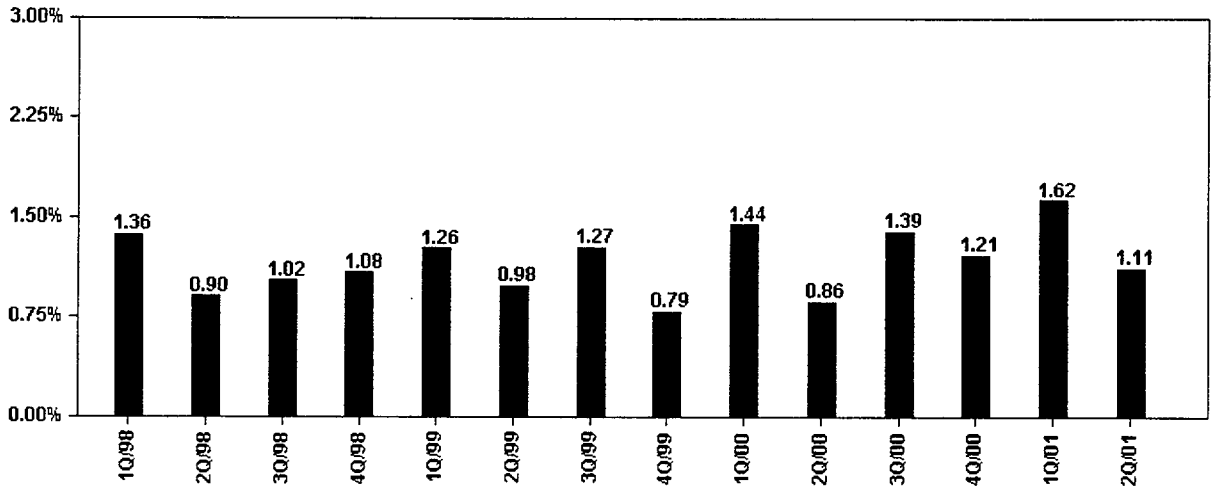

Descriptions

Safety System Unavailability, High Pressure Injection System (HPCI)

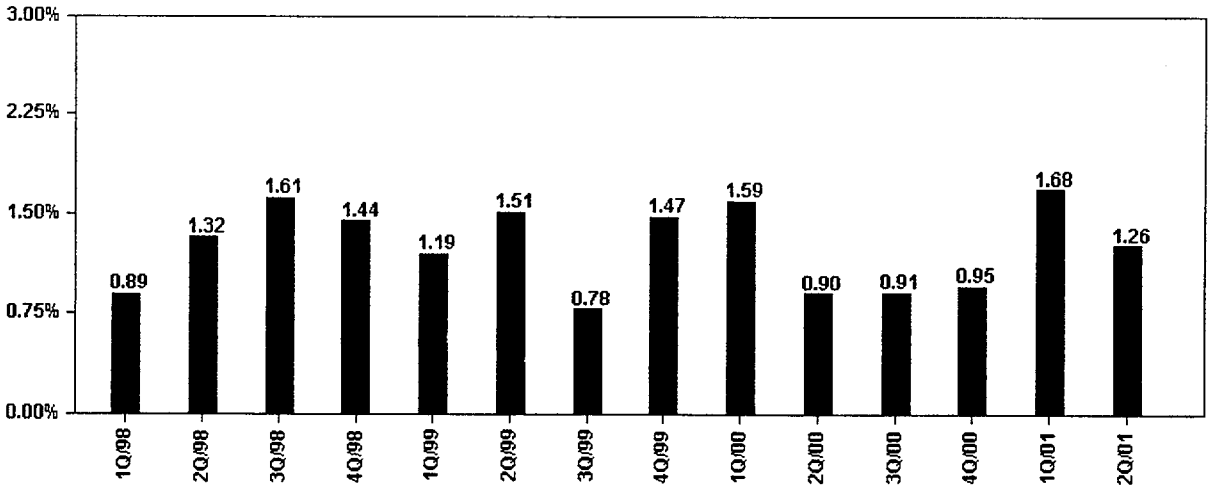

Descriptions

Safety System Unavailability, High Pressure Injection System (HPCS)

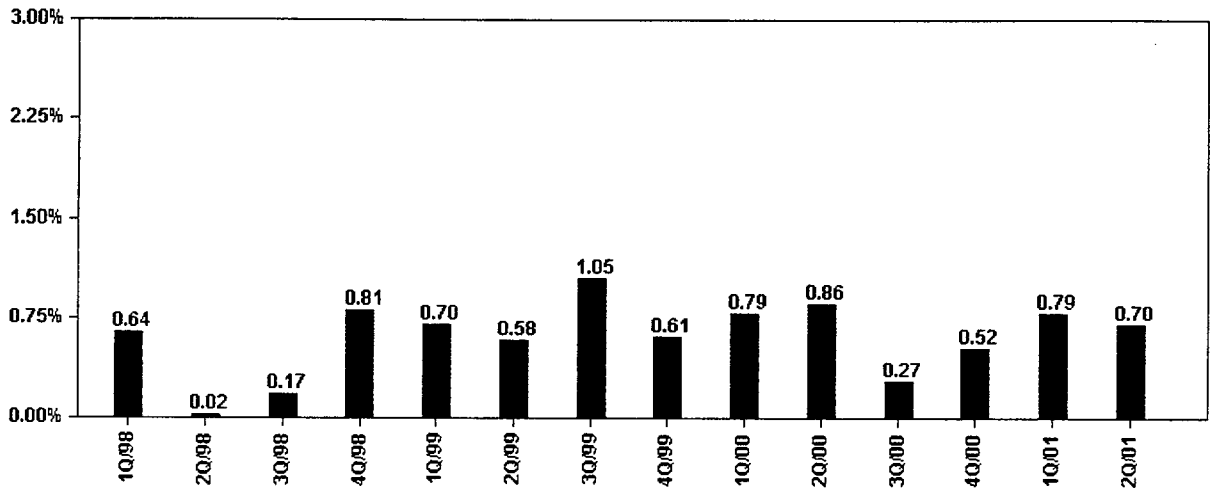

Descriptions

Safety System Unavailability, Heat Removal System (RCIC)

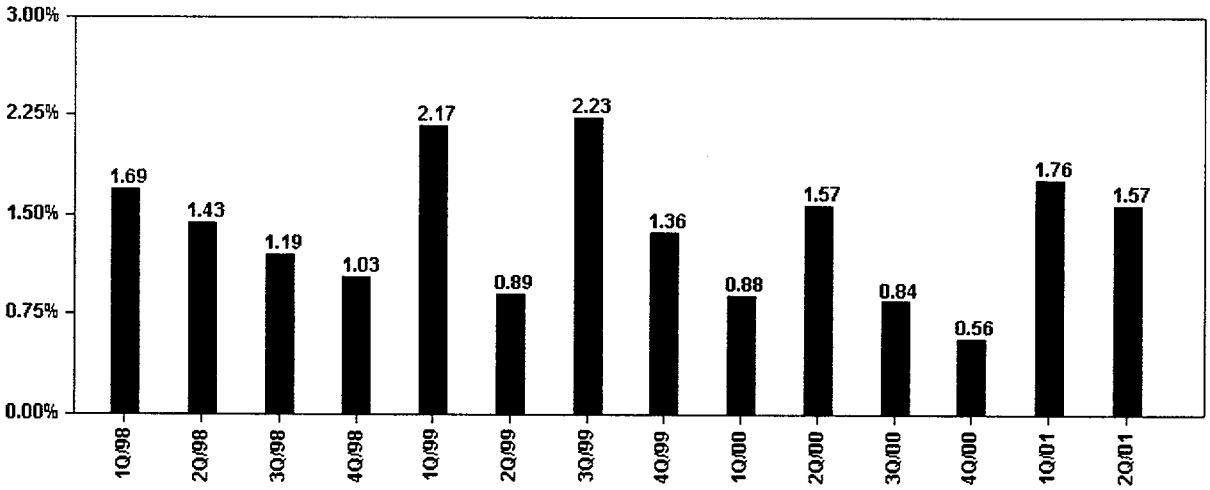

Descriptions

Safety System Unavailability, Heat Removal System (AFW)

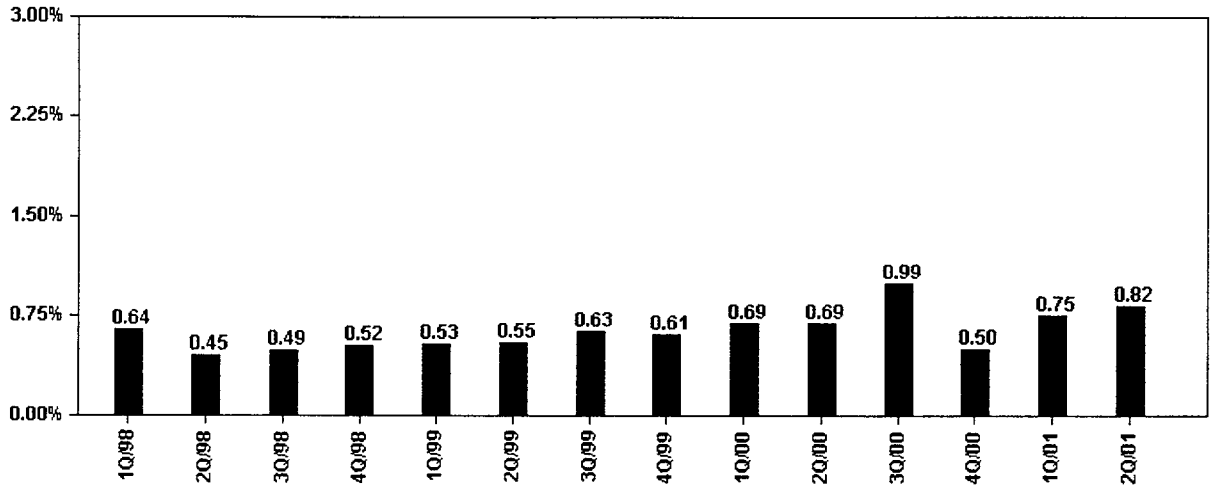

Descriptions

Safety System Unavailability, Residual Heat Removal System (PWR)

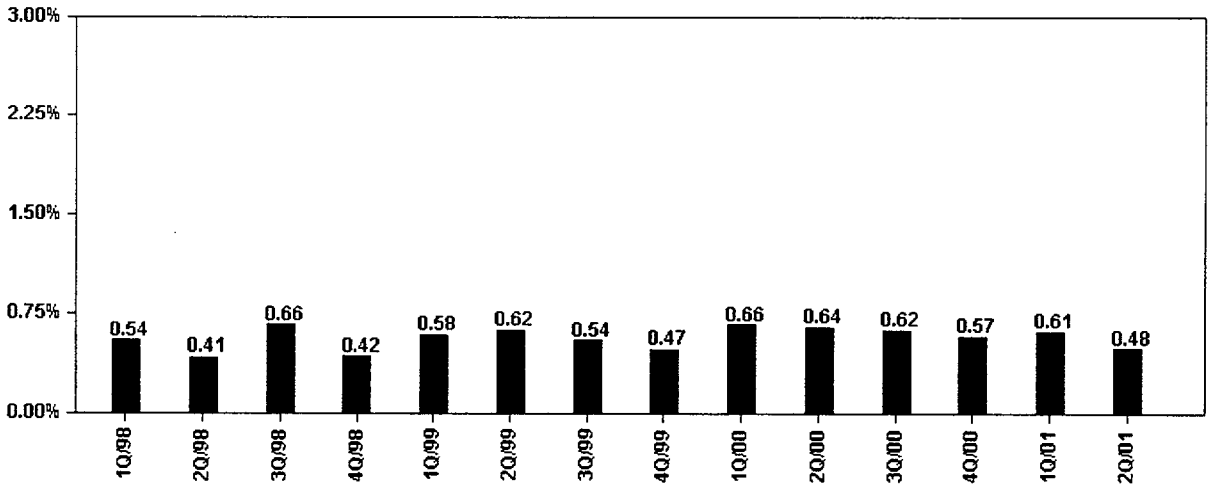

Descriptions

Safety System Unavailability, Residual Heat Removal System (BWR)

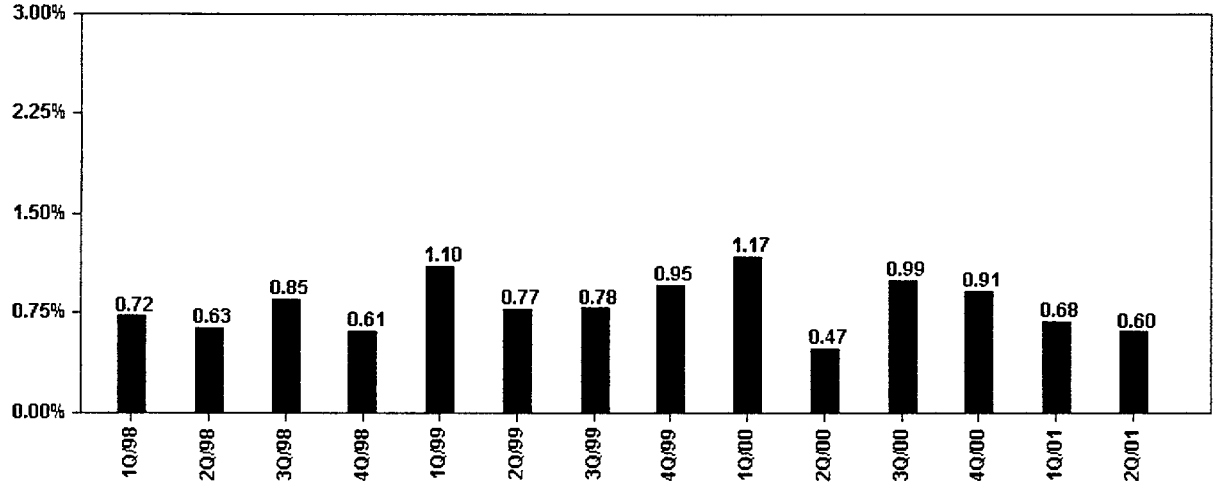

Descriptions

Safety System Functional Failures (PWR)

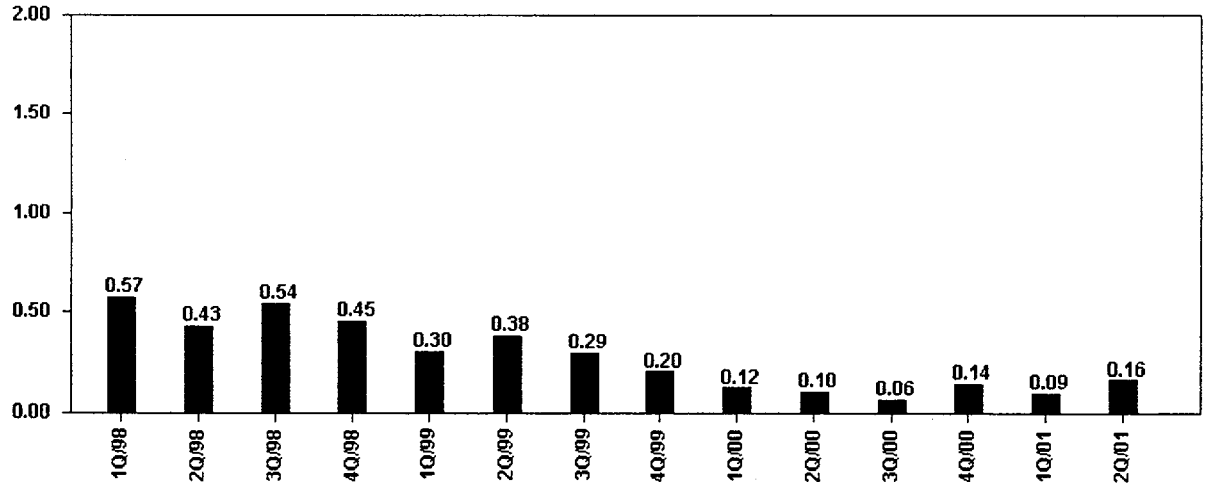

Descriptions

Safety System Functional Failures (BWR)

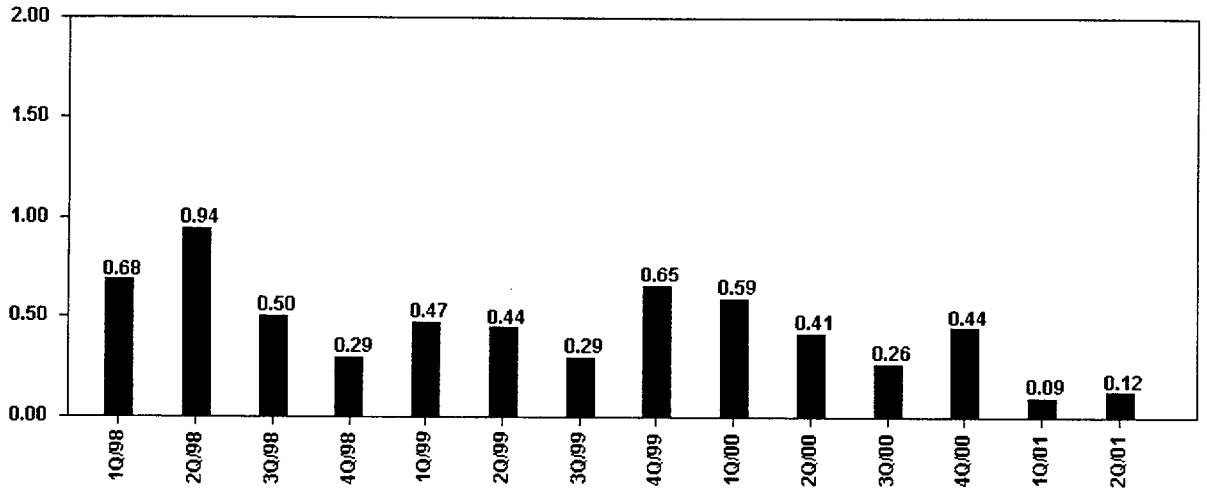

Descriptions

Initiating Events Industry Trends

Barrier Integrity Industry Trends

Last Modified: July 26, 2001

Reset example

Data Example
The table displays three categories of data for a one train system: *Standard, Reset*, and *Calculated*. The *Standard* data includes the input data elements that are required to be submitted each quarter for each train/system. The *Reset* data includes data elements that are submitted as necessary to reset fault exposure hours per applicable guidance. The *Calculated* data provides interim and final results of performance indicator calculations using the *Standard* and *Reset* data of the example.

The data example displays 17 quarters of *Standard* data. Of note in the example are Fault Exposure Unavailable hours reported 1Q00.

The example also includes one quarter in which *Reset* data have been submitted. It is important to recognize that this example reflects the status of performance indicator data elements and calculations following incorporation of reset data submitted as a revision to previously submitted data via a change report. As such, all data for a given quarter (i.e., standard and reset) would not have been submitted concurrently. Reset data would only have been submitted following the completion of all requirements established by NEI 99-02.

Reset Example
The fault exposure hours reported for 1Q00 reflect a single item. As such, the item must meet the requirements for reset.

Requirement 1 – Four quarters have elapsed from exceedance of Green-White threshold
Requirement 2 – Fault exposure hours equal to or greater than 336 hours
Requirement 3 – Green-White threshold exceeded
Requirement 4 – All corrective actions completed
Requirement 5 – Supplemental inspection and resulting open items completed and closed out in an inspection report.

use words from p 33

The example meets the first requirement beginning with 1Q01. The second requirement is met since the total event hours exceed 336 hours. The third requirement is met beginning with the first quarter in which a PI value is calculated (1Q01) in that the PI value exceeds the G-W threshold value of 2.5%. The fourth and fifth requirements, for the purposes of this example, are assumed to be fully met by 1Q01.

00

The reset data for Train 1 shows that the reset data will first become effective beginning with the calculation of the performance indicator for 1Q01 (i.e., effective quarter = 1Q01). Beginning with 1Q01, 500 fault exposure hours will be removed from the calculation and 20 planned unavailable hours will be added to the calculation. The 20 "delta" planned unavailable hours reflect unavailable hours that were excluded from the original reporting to avoid overlap (double counting) with fault exposure hours and must now be re-added. The combination of 500 reset hours and 20 "delta" hours results in 480 "effective reset hours." These effective reset hours are carried forward into future quarters for a period equivalent to the original quarter plus 11 quarters. Expressed in a different way, the reset hours associated with a quarter are carried forward as long as the original fault exposure hours are included in a calculation. (Note that

Attachment 6

reset data need be input only one time. Carryover and use in the calculation for future quarters, as appropriate, is performed as part of the performance indicator calculation.)

	1Q97	2Q97	3Q97	4Q97	1Q98	2Q98	3Q98	4Q98	1Q99	2Q99	3Q99	4Q99	1Q00	2Q00	3Q00	4Q00	1Q01
Train 1																	
Planned Unavailable Hours (quarter)	5	0	45	0	12	0	67	12	0	148	34	0	0	0	0	10	0
Unplanned Unavailable Hours (qrtr)	48	0	0	48	0	5	0	0	0	0	0	0	0	24	0	0	0
Fault Exposure Unavailable (quarter)	0	0	0	0	0	0	0	0	0	0	0	0	500	0	0	0	0
Hours Train Required (quarter)	2160	2184	2208	2208	2160	2184	2208	2208	2160	2184	1104	2208	2160	2184	2208	2208	2208

Δ Planned Unavailable Hours (qrtr)													20				
Δ Unplanned Unavailable Hours (qrtr)													0				
Fault Exposure Reset Hours (quarter)													500				
Effective Quarter for Reset Hours													1Q01				
Reset Hours (quarter)	0	0	0	0	0	0	0	0	0	0	0	0	480	0	0	0	0
Effective Reset Hours (12 quarter)												0	0	0	0	0	480
Total Hours Unavailable (12 quarter rolling sum)												424	871	895	850	812	800
Total Hours Unavailable, adjusted (Hrs Unavailable – Effective Reset Hrs)												424	871	895	850	812	320
Total Hours Train Required for Service (12 quarter rolling sum)												25176	25176	25176	25176	25176	25224
Train Unavailability (Hours Unavailable after adjustment/Hours Required for Service)												1.7%	3.5%	3.6%	3.4%	3.2%	1.3%

Performance Indicator Value	**1.7%**	**3.5%**	**3.6%**	**3.4%**	**3.2%**	**1.3%**

Safety System Unavailability (12 quarter rolling average)

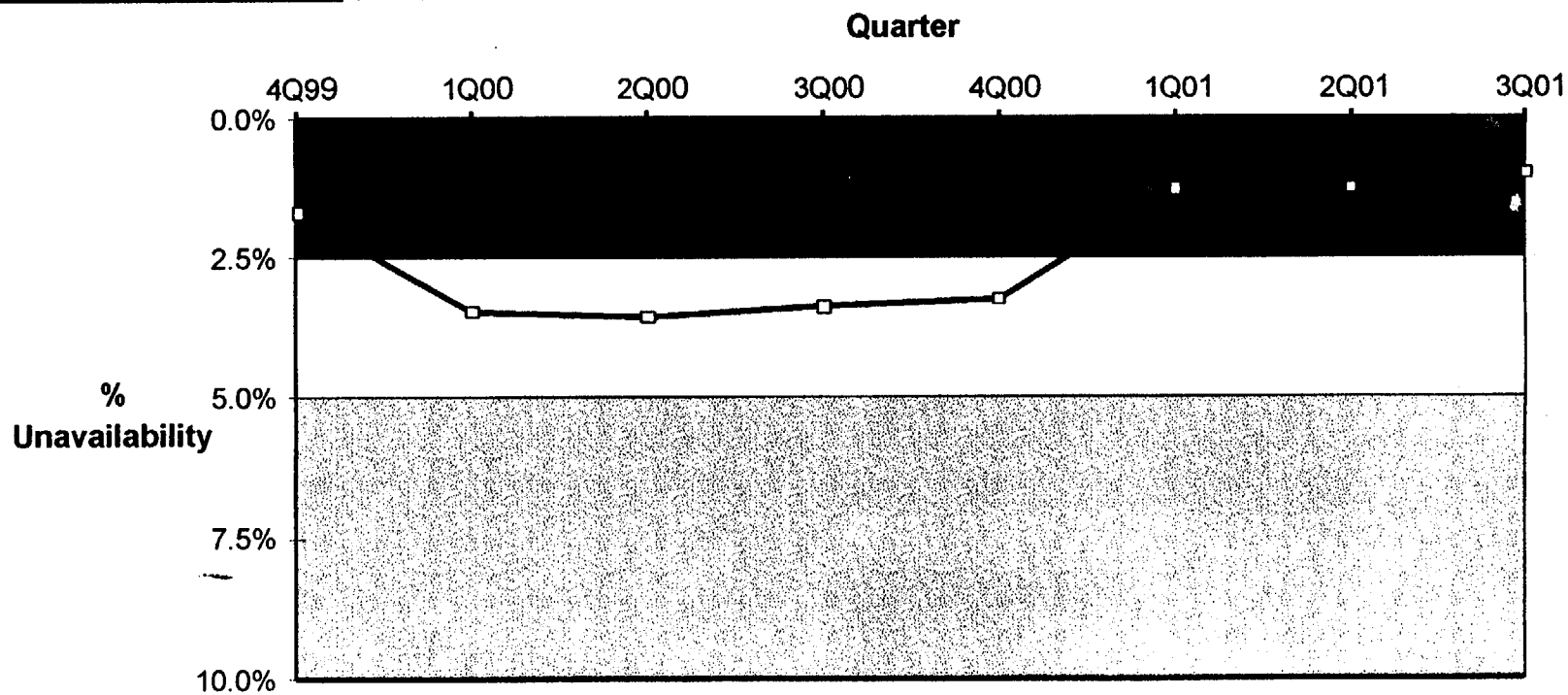

2.2 MITIGATING SYSTEMS CORNERSTONE

The objective of this cornerstone is to monitor the availability, reliability, and capability of systems that mitigate the effects of initiating events to prevent core damage. Licensees reduce the likelihood of reactor accidents by maintaining the availability and reliability of mitigating systems. Mitigating systems include those systems associated with safety injection, decay heat removal, and their support systems, such as emergency AC power. This cornerstone includes mitigating systems that respond to both operating and shutdown events.

While safety systems are generally thought of as those that are designed to mitigate design basis accidents, not all mitigating systems have the same risk importance. PRAs have shown that risk is often influenced not only by front-line mitigating systems, but also by support systems and equipment. Such systems and equipment, both safety- and non-safety related, have been considered in selecting the performance indicators for this cornerstone. Not all aspects of licensee performance can be monitored by performance indicators, and risk-informed baseline inspections are used to supplement these indicators.

There are three sets of indicators in this cornerstone:

- System Unavailability at Power
- System Unreliability at Power
- Safety System Functional Failures

SYSTEM UNAVAILABILITY AT POWER

Purpose

The purpose of the system unavailability indicator is to monitor the readiness of important systems to perform their risk-significant functions in response to off-normal events or accidents while the reactor is critical.

Indicator Definition

The average of the individual train unavailabilities in the system. Train unavailability is the ratio of the hours the train is unavailable to the number of critical hours in the period.

The performance indicator is calculated separately for each of the following six systems for each reactor type.

BWRs

- high pressure injection systems -- (high pressure coolant injection, high pressure core spray, feedwater coolant injection)

Attachment 7

- heat removal systems - (reactor core isolation cooling)
- residual heat removal system
- emergency AC power system
- service water
- component cooling water

PWRs

- high pressure safety injection system
- auxiliary feedwater system
- emergency AC power system
- residual heat removal system
- service water
- component cooling water

Data Reporting Elements

The following elements are reported for each train for the previous quarter:

- unavailable hours,
- fault exposure hours
- effective reset hours
- critical hours, and.
- number of trains in the system

Sources for identifying unavailable hours can be obtained from system failure records, control room logs, event reports, maintenance work orders, etc. Preventive maintenance and surveillance test procedures may be helpful in determining if activities performed using these procedures cause systems or trains to be unavailable. These procedures may also assist in identifying the frequency of such maintenance and test activities.

Calculation

The system unavailability is determined for each reporting quarter as follows:

Train unavailability during previous 12 quarters:

$$\frac{(\text{unavailable hrs}) + (\text{fault exposure hrs}) - (\text{effective reset hrs})}{(\text{critical hours during previous 12 quarters})}$$

System unavailability is the sum of the train unavailabilities divided by the number of system trains.

The indicator for each of the monitored systems is the average system unavailability over the previous 12 quarters.

For some multi-unit stations the calculation for the emergency diesel generator value could be affected by a "swing" emergency diesel generator for either unit or other units. (See Emergency AC Power section for further details.)

Definition of Terms

Unavailable hours: These hours include time the train was incapable of performing its risk-significant function due to being out of service for maintenance, testing, equipment modification, or any other time equipment is electively removed from service, and corrective maintenance time or elapsed time between the discovery and the restoration to service of an equipment failure or human error that makes the train unavailable (such as a misalignment).

Fault exposure hours: The hours associated with the discovery of a condition where a risk significant function cannot be accomplished and the time of the fault has been determined with certainty. The discovery of the condition can be either a demand failure or an identified condition not associated with an actual demand.

Effective reset hours: The sum of reset hours (fault exposure reset hours – delta unavailable hours) during the previous 12 quarters that are *effective* (i.e., applicable) during the current quarter. (This term is explained in more detail in the Clarifying Notes.)

Critical hours are the number of hours the reactor is critical during the quarter.

A train consists of a group of components that together provide the risk significant functions of the system and as explained in the enclosures for specific reactor types. Fulfilling the risk significant function of the system may require one or more trains of a system to operate simultaneously. The number of trains in a system is determined as follows:

- for systems that primarily pump fluids, the number of trains is equal to the number of parallel pumps or the number of flow paths in the flow system (e.g., number of auxiliary feedwater pumps). The preferred method is to use the number of pumps. For a system that contains an installed spare pump, the number of trains would equal the number of flow paths in the system.

- for systems that provide cooling of fluids, the number of trains is determined by the number of parallel heat exchangers, or the number of parallel pumps, whichever is fewer.

- emergency AC power system: the number of class 1E emergency (diesel, gas turbine, or hydroelectric) generators at the station that are installed to power shutdown loads in the event of a loss of off-site power.

Note: Additional guidance for specific systems is provided later in this section.

Risk Significant Function: those functions of the monitored systems that were determined to be high safety significant as defined in NUMARC 93-01 (revision 3) as endorsed by the NRC in Regulatory Guide 1.160 for meeting the requirements of the maintenance rule.

Clarifying Notes

General

The systems have been selected for this indicator based on their importance in preventing reactor core damage or extended plant outage. The selected systems include the principal systems needed for maintaining reactor coolant inventory following a loss of coolant, for decay heat removal following a reactor trip or loss of main feedwater, and for providing emergency AC power following a loss of plant off-site power and certain key support systems for these functions. (Note, however, that support systems are not cascaded onto these systems.)

Except as specifically stated in the indicator definition and reporting guidance, no attempt is made to monitor or give credit in the indicator results for the presence of other systems at a given plant that add diversity to the mitigation or prevention of accidents. For example, no credit is given for additional power sources that add to the reliability of the electrical grid supplying a plant because the purpose of the indicator is to monitor the effectiveness of the plant's response once the grid is lost.

Some components in a system may be common to more than one train, in which case the effect of the performance (unavailable hours) of a common component is included in all affected trains.

Unavailable hours for a multi-function system should be counted only during those times when any risk significant function monitored by this indicator is required to be available.

Trains are generally considered to be available during periodic system or equipment realignments to swap components or flow paths as part of normal operations.

If a licensee is required to take a component out of service for evaluation and corrective actions related to a Part 21 Notification, (or if a Part 21 Notification is issued in response to a licensee identified condition), the unavailable hours must be reported.

Train unavailability occurs when a risk-significant function can not be met. The criteria for determining functionality is based on plant specific PRA success criteria credited in the

PRA model. Licensees should ensure that the risk significant functions and the PRA success criteria are readily retrievable for NRC inspection.

Treatment of Failures on Demand and Discovered Conditions

The following table identifies the rules for determining when a failure on demand or a discovered condition should be counted against the unavailability or unreliability performance indicator.

Adverse Condition	**Exposure Time Known**		**Fault Exposure Unavailability**	**Demand Failure**	**Unplanned** Unavailability
	Yes	**No**			
Failure on Demand	X		From time of condition until time of demand	None	From time of demand until corrected
Failure on Demand		X	None	Yes	From time of demand until corrected
Discovered Condition	X		From time of condition until time of discovery	None	From time of discovery until corrected
Discovered Condition		X	None	Yes	From time of discovery until corrected

Treatment of Degraded Conditions

If a degraded condition results in the failure to meet established success criterion, unavailability must be reported for the degraded condition. If subsequent analysis identifies additional margin for the success criterion, future unavailability for degraded conditions is determined based on the new criterion. However, historical unavailability must be based on the criterion of record at the time of the degraded condition.

If the degraded condition is not addressed by the pre-defined success criteria, an engineering evaluation to determine the impact of the degraded condition on the risk significant function should be completed and documented. The use of component failure analysis, circuit analysis, or event investigations are acceptable. Engineering judgment may be used in conjunction with analytical techniques to determine the impact of the degraded condition on the risk significant function.

Fault Exposure Hours

Fault exposure hours are the time that a train spends in an undetected, failed condition. Detection can occur through discovery or as a result of a demand failure

The failure's time of occurrence and its time of discovery are known. Examples of this type of failure include events external to the equipment (e.g., a lightning strike, some mispositioning by operators, or damage caused during test or maintenance activities) that caused the train failure at a known time. For these cases, the fault exposure hours are the lapsed time between the occurrence of a failure and its time of discovery. These hours are reported as fault exposure hours and are included in the calculation of safety system unavailability.

Fault exposure hours are only reported for periods when the reactor was critical.

For instances where the time of occurrence is determined to have occurred more than three years ago (12 quarters) faulted hours are only computed back for a maximum of 12 quarters.

Fault exposure hours are not counted for a failure to meet design or technical specifications, if engineering analysis determines the train was capable of performing its risk significant function during an operational event. For example, if an emergency generator fails to reach rated speed and voltage in the precise time required by technical specifications, the generator is not considered unavailable if the test demonstrated that it would start, load, and run as required to meet its risk significant function.

Reporting Fault Exposure Hours

The fault exposure hours associated with a component failure may include unavailable hours covering several reporting periods (e.g., several quarters). The fault exposure hours should be assigned to the appropriate reporting periods when the reactor was critical. For example, if a failure is discovered on the 10th day of a quarter and the number of unavailable hours is 300 hours, then 240 hours should be counted for the current quarter and 60 unavailable hours should be counted for the previous quarter. Note: This will require an update of the previous quarter's data. Remove the double count by removing the unavailable hours which overlap with the fault exposure hours. Put an explanation in the comment field. If you later reset the fault exposure hours, restore the hours which had been removed.

Resetting Fault Exposure Hours

Fault exposure hours associated with a single item may be reset 4 quarters after the green-white threshold was crossed, provided the following criteria are met:

1. The fault exposure hours associated with the item are greater than or equal to 336 hours and the green-white threshold has been exceeded. (Note: The green-white threshold may have been crossed in the same quarter, or in a subsequent quarter.)

2. Corrective actions associated with the item to preclude recurrence of the condition have been completed by the licensee, and
3. Supplemental inspection activities by the NRC have been completed and any resulting open items related to the condition causing the fault exposure have been closed out in an inspection report.

Fault exposure hours are reset by submitting a change report that provides the hours to be reset and the first quarter in which the reset hours become effective (i.e., the first quarter in which all the conditions for reset are met). The reset hours should include any planned and unplanned hours that were previously unreported. The change report should include a comment to document this action.

Data Example (Refer to the table at the end of this section.)

The table displays three categories of data for each train: *Standard, Reset*, and *Calculated*. The *Standard* data includes the input data elements that are required to be submitted each quarter for each train/system. The *Reset* data includes data elements that are submitted as necessary to reset fault exposure hours per applicable guidance. The *Calculated* data provides interim and final results of performance indicator calculations using the *Standard* and *Reset* data of the example.

The data example displays 16 quarters of *Standard* data for a two-train system. Of note in the example are Fault exposure hours reported for Train 1 and Train 2. For Train 1, fault exposure hours are indicated for 4Q97 and 1Q98. The example addresses these hours as a single event that resulted in 607 fault exposure hours spread over two reporting quarters. For Train 2, fault exposure hours are indicated for 3Q99.

The example also includes three quarters in which *Reset* data have been submitted. It is important to recognize that this example reflects the status of performance indicator data elements and calculations following the 4Q00 submittal. As such, all data for a given quarter (i.e., standard and reset) would not have been submitted concurrently. Reset data would only have been submitted following the completion of all requirements established by NEI 99-02.

<u>Train 1 Reset Example</u>

As noted above, the fault exposure hours for Train 1 reflect a single item. As such, the <u>item</u> must meet the requirements for reset.

Requirement 1 – Four quarters have elapsed from discovery
Requirement 2 – Fault exposure hours equal to or greater than 336 hours
Requirement 3 – Green-White threshold exceeded
Requirement 4 – All corrective actions completed
Requirement 5 – Supplemental inspection and resulting open items completed and closed out in an inspection report.

The Train 1 example meets the first requirement beginning with 1Q99. The second requirement is met since the total event hours exceed 336 hours. The third requirement is met beginning with the first quarter in which a PI value is calculated (4Q99) in that the PI value exceeds the G-W threshold value of 2.5%. The fourth and fifth requirements are assumed to be the limiting factors in this example and for purposes of this example, are assumed to be fully met 1Q00.

The reset data for Train 1 shows that the reset data will first become effective beginning with the calculation of the performance indicator for 1Q00 (i.e., effective quarter = 1Q00). Beginning with 1Q00, 607 fault exposure hours (103+504) will be removed from the calculation and 42 planned unavailable hours (12+30) will be added to the calculation. The 42 "delta" planned unavailable hours reflect unavailable hours that were excluded from the original reporting to avoid overlap (double counting) with fault exposure hours and must now be re-added. The combination of 607 reset hours and 42 "delta" hours results in 565 "effective reset hours" (607-42). These effective reset hours are carried forward into future quarters for a period equivalent to the original quarter plus 11 quarters. Expressed in a different way, the reset hours associated with a quarter are carried forward as long as the original fault exposure hours are included in a calculation. Thus in the Train 1 example, the effective hours for 4Q00 are decreased by 91 hours (103-12) to reflect the fact that 4Q97 data are no longer included in the performance indicator calculation for 4Q00. (Note that reset data need be input only one time. Carryover and use in the calculation for future quarters, as appropriate, is performed as part of the performance indicator calculation.)

Train 2 Reset Example

The Train 2 reset example is a simple application of the reset function. *Reset* data identifies 336 reset hours and no "delta" hours. Beginning with the effective quarter (3Q00), 336 hours will be removed from the PI calculation. These reset hours will be carried forward and used in PI calculations until 3Q02[1].

Credit for Operator Recovery Actions

1. During testing:
   Unavailability of a risk significant function during testing need not be reported if the test configuration is automatically overridden by a valid starting signal, or the function can be promptly restored either by an operator in the control room or by a dedicated operator[2] stationed locally for that purpose. Restoration actions must be contained in a written procedure[3], must be uncomplicated (*a single action or a few simple actions*), and must not require diagnosis or repair. Credit for a dedicated local operator can be taken only if (s)he is positioned at the proper location throughout the duration of the test for the purpose of restoration of the train should a valid demand occur. The intent of this paragraph is to allow licensees to take credit for restoration of the risk

[1] The performance indicator calculation for 3Q02 uses data from 4Q99 through 3Q02. As such, neither the *standard* data nor the *reset* data from 3Q99 are used in the calculation for 3Q02 and beyond.
[2] Operator in this circumstance refers to any plant personnel qualified and designated to perform the restoration function.
[3] Including restoration steps in an approved test procedure

significant functions that are virtually certain to be successful (i.e., probability nearly equal to 1).

The individual performing the restoration function can be the person conducting the test and must be in communication with the control room. Credit can also be taken for an operator in the main control room provided s(he) is in close proximity to restore the equipment when needed. Normal staffing for the test may satisfy the requirement for a dedicated operator, depending on work assignments. In all cases, the staffing must be considered in advance and an operator identified to take the appropriate prompt response for the testing configuration independent of other control room actions that may be required.

Under stressful chaotic conditions otherwise simple multiple actions may not be accomplished with the virtual certainty called for by the guidance (e.g., lift test leads and land wires; or clearing tags). In addition, some manual operations of systems designed to operate automatically, such as manually controlling HPCI turbine to establish and control injection flow are not virtually certain to be successful.

2. Equipment failures

Operator actions to recover from an equipment malfunction or an operating error can be credited if the function can be promptly restored from the control room by a qualified operator taking an uncomplicated action (a single action or a few simple actions) without diagnosis or repair (i.e., the restoration actions are virtually certain to be successful during accident conditions). Note that under stressful, chaotic conditions, otherwise simple multiple actions may not be accomplished with the virtual certainty called for by the guidance (e.g., lift test leads and land wires). In addition, some manual operations of systems designed to operate automatically, such as manually controlling HPCI turbine to establish and control injection flow, are not virtually certain to be successful. These situations should be resolved on a case-by-case basis through an FAQ.

3. During Maintenance

Unavailability of a risk significant function during maintenance need not be reported if the function can be promptly restored either by an operator in the control room or by a dedicated operator[4] stationed locally for that purpose. Restoration actions must be contained in a written procedure[5], must be uncomplicated (*a single action or a few simple actions*), and must not require diagnosis or repair. Credit for a dedicated local operator can be taken only if (s)he is positioned at the proper location throughout the duration of the maintenance activity for the purpose of restoration of the train should a valid demand occur. The intent of this paragraph is to allow licensees to take credit for restoration of the risk significant functions that are virtually certain to be successful

[4] Operator in this circumstance refers to any plant personnel qualified and designated to perform the restoration function.
[5] Including restoration steps in an approved test procedure

(i.e., probability nearly equal to 1).

The individual performing the restoration function cannot be the person conducting the maintenance and must be in communication with the control room. Credit can also be taken for an operator in the main control room provided s(he) is in close proximity to restore the equipment when needed.

Under stressful chaotic conditions otherwise simple multiple actions may not be accomplished with the virtual certainty called for by the guidance (e.g., lift test leads and land wires; or clearing tags).

Equipment Unavailability due to Design Deficiency

Equipment failures due to design deficiency will be treated in the following manner:

1. Failures that are capable of being discovered during surveillance tests: These failures should be evaluated for inclusion in the equipment unavailability indicators. Examples of this type are failures due to material deficiencies, subcomponent sizing/settings, lubrication deficiencies, and environmental protection problems.

2. Failures that are not capable of being discovered during normal surveillance tests: These failures are usually of longer fault exposure time. These failures are amenable to evaluation through the NRC's Significance Determination Process and are excluded from the unavailability indicators. Examples of this type are failures due to pressure locking/thermal binding of isolation valves or inadequate component sizing/settings under accident conditions (not under normal test conditions). While not included in the calculation of the unavailability indicators, these failures and the associated hours should be reported in the comment field of the PI data submittal.

Installed Spares and Redundant Maintenance Trains

Some power plants have safety systems with extra trains to allow preventive maintenance to be carried out with the unit at power without violating the single failure criterion (when applied to the remaining trains). That is, one of the remaining trains may fail, but the system can still achieve its safety function as required by the design basis safety analysis. Such systems are characterized by a large number of trains (usually a minimum of four, but often more). To be a maintenance train, a train must not be required to perform its risk significant function.

An "installed spare" is a component (or set of components) that is used as a replacement for other equipment to allow for the removal of equipment from service for preventive or corrective maintenance without violating the single failure criterion. To be an "installed

spare," a component must not be required for the system to perform its risk significant function.

Unavailable hours for an installed spare are counted only if the installed spare becomes unavailable while serving as replacement for another component. This includes unavailable hours and fault exposure hours.

Unavailable hours are not counted for a component when that component has been replaced by an installed spare.

In some designs, specific systems have a complete spare train, allowing the total replacement of one train for on-line maintenance, or increased system availability. Systems that have such extra trains generally must meet risk significant functional requirements with one train in maintenance and a single failure of another train.

In systems where there are installed spare components or trains, unavailable hours for the spare component or train are only counted against the replaced component or train. For example, if a system has an installed spare train that is valved into the system, any unavailable hours are counted against the replaced train, not the spare train. Thus, in a three train system that has one installed spare train, the number of trains in the safety system unavailability equation is two. The system unavailability is the sum of the unavailable hours divided by two.

Data Example NEEDS TO BE REVISED

	A	B	C	D	E	F	G	H	I	J	K	L	M	N
1	Safety System Unavailability ((SSU), AC Emergency Power, 'UNIT ONE													
2														
3	*Train 1 A*	2Q/95	3Q/95	4Q/95	1Q/96	2Q/96	3Q/96	4Q/96	1Q/97	2Q/97	3Q/97	4Q/97	1Q/98	2Q/98
4	Planned Unavailable Hours	5	0	5	0	128	0	0	0	0	0	128	0	
5	Unplanned Unavailable Hours	0	0	0	48	0	5	0	0	36	0	12	0	
6	Fault Exposure Unavailable	0	0	5	32	0	504	0	0	336	0	36	0	
7	Hours Unavailable (quarter)	5	0	10	80	128	509	0	0	372	0	176	0	
8	Total Hours Unavailable												1280	12
9	Hours Train Required for Service	2160	2184	2208	2208	2160	2184	2208	2208	2160	2184	1104	2208	21
10	Total Hrs Train Req'd for Service												25176	251
11	Train Unavailability												0.050842	0.0506
12														
13														
14	*Train S (Swing EDG)*	2Q/95	3Q/95	4Q/95	1Q/96	2Q/96	3Q/96	4Q/96	1Q/97	2Q/97	3Q/97	4Q/97	1Q/98	2Q/98
15	Planned Unavailable Hours	0	16	6	0	0	0	4	0	0	0	128	0	
16	Unplanned Unavailable Hours	11	0	0	0	56	11	0	1	0	0	12	0	
17	Fault Exposure Unavailable	0	60	0	0	0	70	148	0	65	0	131	3	
18	Hours Unavailable (quarter)	11	76	6	0	56	81	152	1	65	0	271	3	
19	Total Hours Unavailable												722	7
20	Hours Train Required for Service	2160	2184	2208	2208	2160	2184	2208	2208	2160	2184	1104	2208	21
21	Total Hrs Train Req'd for Service												25176	251
22	Train Unavailability												0.028678	0.02
23														
24														
25	For EDG system, two unit, one dedicated, one swing EDG													
26	Quarter												1Q/98	2Q/98
27	System unavailability												4.0%	4.0
28														
29														

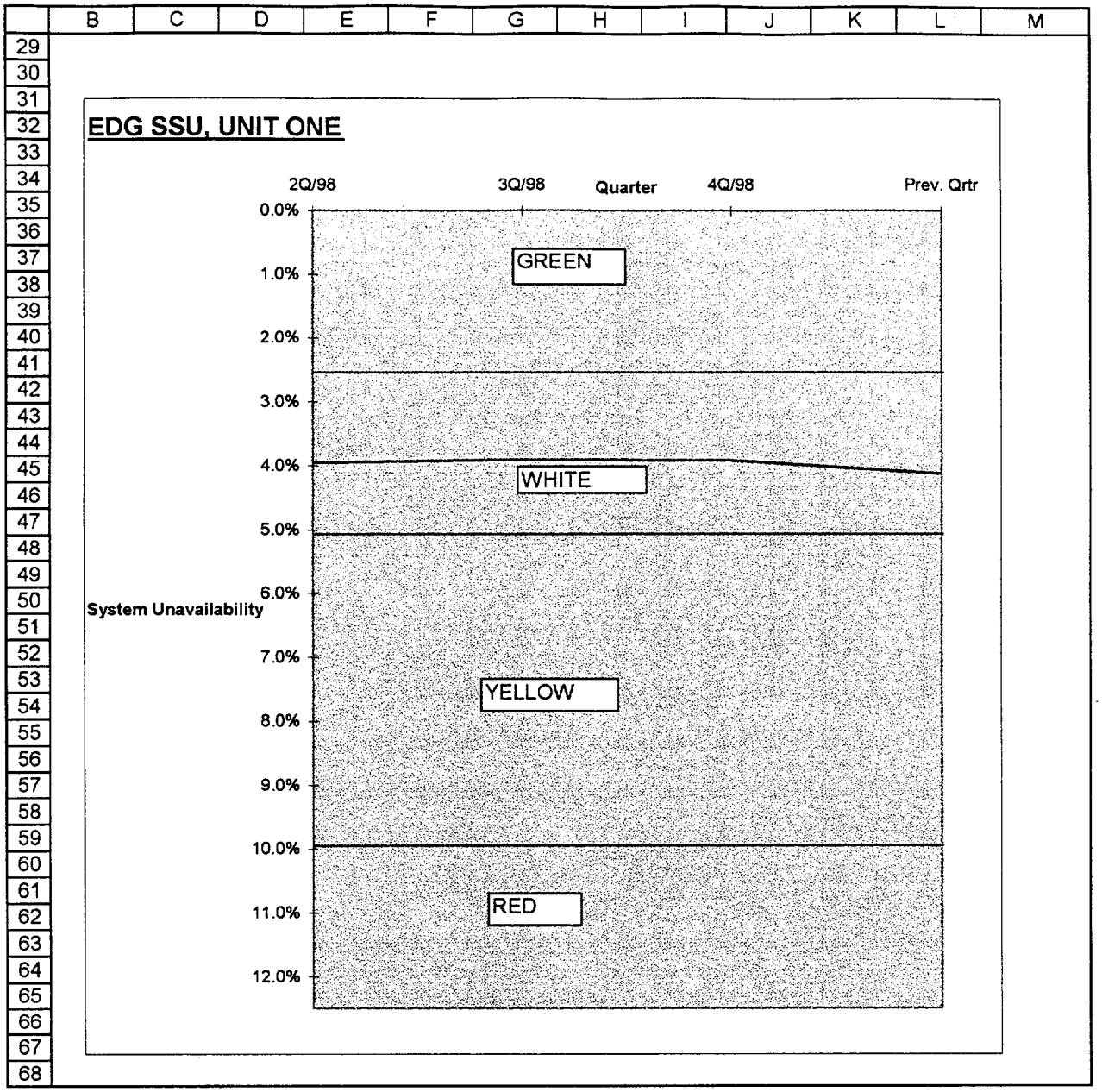
EDG SSU, UNIT ONE
2Q/98
3Q/98
Quarter
4Q/98
Prev. Qrtr
0.0%
1.0%
2.0%
3.0%
4.0%
5.0%
6.0%
7.0%
8.0%
9.0%
10.0%
11.0%
12.0%
System Unavailability
GREEN
WHITE
YELLOW
RED

TO WHAT EXTENT DO WE NEED ADDITIONAL GUIDANCE?

ADDITIONAL GUIDANCE FOR SPECIFIC SYSTEMS

Emergency AC Power Systems

Definition and Scope

This section provides additional guidance for reporting performance of the emergency AC power system. The emergency AC power system is typically comprised of two or more independent emergency generators that provide AC power to class 1E buses following a loss of off-site power. The emergency generator dedicated to providing AC power to the high pressure core spray system in BWRs is also within the scope of emergency AC power.

Most emergency generator trains include dedicated subsystems such as air start, lube oil, fuel oil, cooling water, etc. Generally, unavailable hours are counted if a failure or unavailability of a dedicated subsystem prevents the emergency generator from performing its function. Some examples are discussed in the clarifying notes for this attachment.

The electrical circuit breaker(s) that connect(s) an emergency generator to the class lE buses that are normally served by that emergency generator are considered to be part of the emergency generator train.

Emergency generators that are not safety grade, or that serve a backup role only (e.g., an alternate AC power source), are not required to be included in the performance reporting.

Train Determination

The system unavailability is calculated on a per unit basis using the train unavailability value for each emergency diesel generator (EDG) that provides emergency AC power to that unit. The number of emergency AC power system trains for a unit is equal to the number of class 1E emergency generators that are available to power safe-shutdown loads in the event of a loss of off-site power for that unit. There are three typical configurations for EDGs at a multi-unit station:

1. EDGs dedicated to only one unit.
2. One or more EDGs are available to "swing" to either unit
3. All EDGs can supply all units

For configuration 1, the number of trains for a unit is equal to the number of EDGs dedicated to the unit. For configuration 2, the number of trains for a unit is equal to the number of dedicated EDGs for that unit plus the number of "swing" EDGs available to that unit (i.e., The "swing" EDGs are included in the train count for each unit). For configuration 3, the number of trains is equal to the number of EDGs.

Clarifying Notes

Emergency diesel generators that are dedicated to the High Pressure Core Spray (HPCS) in some BWRs should be included as a train in the Emergency AC Power calculation.

Fault exposure hours are not counted for failures of an EDG to start or load-run if the failure can be definitely attributed to reasons listed in the General Clarifying Notes for Safety System Unavailability, or to any of the following:

- spurious operation of a trip that would be bypassed in the loss of offsite power emergency operating mode (e.g., high cooling water temperature trip that erroneously tripped an EDG although cooling water temperature was normal).
- malfunction of equipment that is not required to operate during the loss of offsite power emergency operating mode (e.g., circuitry used to synchronize the EDG with off-site power sources, but not required when off-site power is lost)
- a failure to start because a redundant portion of the starting system was intentionally disabled for test purposes, if followed by a successful start with the starting system in its normal alignment

When determining fault exposure hours for a failure of an EDG to load-run following a successful start, the last successful operation or test is the previous successful load-run (not just a successful start). To be considered a successful load-run operation or test, an EDG load-run attempt must have followed a successful start and satisfied one of the following criteria:

- a load-run of any duration that resulted from a real (e.g., not a test) manual or automatic start signal
- a load-run test that successfully satisfied the plant's load and duration test specifications
- other operation (e.g., special tests) in which the emergency generator was run for at least one hour with at least 50 percent of design load.

When an EDG fails to satisfy the 12/18/24-month 24-hour duration surveillance test, the faulted hours are computed based on the last known satisfactory load test of the diesel generator as defined in the three bullets above. For example, if the EDG is shut down during a surveillance test because of a failure that would prevent the EDG from satisfying the surveillance criteria, the fault exposure hours would be computed based upon the time of the last surveillance test that would have exposed the discovered fault.

The emergency diesel generators are not considered to be available during the following portions of periodic surveillance tests unless the requirement that recovery be virtually certain during accident conditions can be satisfied:

- Load-run testing

- Fire Protection "puff" testing
- Barring

BWR High Pressure Injection Systems

(High Pressure Coolant Injection, High Pressure Core Spray, and Feedwater Coolant Injection)

Definition and Scope

This section provides additional guidance for reporting the performance of three BWR systems used primarily for maintaining reactor coolant inventory at high pressures: the high pressure coolant injection (HPCI), high pressure core spray (HPCS), and feedwater coolant injection (FWCI) systems. Plants should monitor either the HPCI, HPCS, or FWCI system, depending on which is installed. These systems function at high pressure to maintain reactor coolant inventory and to remove decay heat following a small-break Loss of Coolant Accident (LOCA) event or a loss of main feedwater event.

Train Determination

The HPCI system is considered a single-train system. The booster pump and other small pumps are ancillary components not used in determining the number of trains. The effect of these pumps on HPCI performance is included in the system unavailability indicator to the extent their failure detracts from the ability of the system to perform its risk significant function. The HPCI turbine, governor, and associated valves and piping for steam supply and exhaust are in the scope of the HPCI system. Valves in the feedwater line are not considered within the scope of the HPCI system.

The HPCS system is also considered a single-train system.. The HPCS diesel generator is considered to be part of the emergency AC power system.

For the feedwater injection system, the number of trains is determined by the number of main feedwater pumps that can be used at one time in this operating mode (typically one).

Clarifying Notes

The HPCS system typically includes a "water leg" pump to prevent water hammer in the HPCS piping to the reactor vessel. The "water leg" pump and valves in the "water leg" pump flow path are ancillary components and are not directly included in the scope of the HPCS system for the performance indicator.

For the feedwater coolant injection system, condensate and feedwater booster pumps are not used to determine the number of trains.

BWR Heat Removal Systems
(Reactor Core Isolation Cooling)

Definition and Scope

This section provides additional guidance for reporting the performance of a BWR system that is used primarily for decay heat removal at high pressure: reactor core isolation cooling (RCIC) system. This system functions at high pressure to remove decay heat following a loss of main feedwater event. The RCIC system also functions to maintain reactor coolant inventory following a very small LOCA event.

Train Determination

The RCIC system is considered a single-train system. The condensate and vacuum pumps are ancillary components not used in determining the number of trains. The effect of these pumps on RCIC performance is included in the system unavailability indicator to the extent that a component failure results in an inability of the system to perform its risk significant function. The RCIC turbine, governor, and associated valves and piping for steam supply and exhaust are in the scope of the RCIC system. Valves in the feedwater line are not considered within the scope of the RCIC system.

BWR Residual Heat Removal Systems

Definition and Scope

This section provides additional guidance for reporting the performance of the BWR residual heat removal (RHR) system for the suppression pool cooling and shutdown cooling modes. The attachment also includes guidance for reporting performance of other systems used to remove heat to outside containment under low pressure conditions at early BWRs where two separate systems provide these functions with unique designs. The suppression pool cooling function is used whenever the suppression pool (or torus) water temperature exceeds or is expected to exceed a high-temperature setpoint (for example, following most relief valve openings or during some post-accident recoveries). The shutdown cooling function is used following any transient requiring normal long-term heat removal from the reactor vessel.

Train Determination

The number of trains in the RHR system is determined by the number of parallel RHR heat exchangers capable of performing suppression pool cooling or shutdown cooling. Other Systems: For some early BWRs, separate systems are used to remove heat to outside the containment under low pressure conditions. Depending on the particular design, one or more of the following systems may be used: shutdown cooling, containment spray, or RHR (torus cooling function). For example, a unit using a shutdown cooling system (with three heat exchangers)and a containment spray system (with two heat exchangers) would monitor each system separately for the safety system unavailability indicators. All components required for each safety system to perform its heat removal function should be included in the scope. The number of trains is determined by the number of heat exchangers in the systems that perform the heat removal function under low pressure conditions (five trains in this example).

Clarifying Notes

The low pressure coolant injection (LPCI), steam cooling, and containment spray modes of RHR operation are not monitored.

Some components are used to provide more than one function of RHR. If a component cannot perform as designed, rendering its associated train incapable of meeting one or both of the risk significant functions, then the train is considered to be failed. Unavailable hours (if the train was required to be available for service) would be reported as a result of the component failure.

PWR High Pressure Safety Injection Systems

Definition and Scope

This section provides additional guidance for reporting the performance of PWR high pressure safety injection (HPSI) systems. These systems are used primarily to maintain reactor coolant inventory at high pressures following a loss of reactor coolant. HPSI system operation following a small-break LOCA involves transferring an initial supply of water from the refueling water storage tank (RWST) to cold leg piping of the reactor coolant system. Once the RWST inventory is depleted, recirculation of water from the reactor building emergency sump is required. Components in the flow paths from each of these water sources to the reactor coolant system piping are included in the scope for the HPSI system. (Because the residual heat removal system has been added to the PWR scope, the isolation valve(s) between the RHR system and the HPSI pump suction is the boundary of the HPSI system. The RHR pumps used for piggyback operation are no longer in HPSI scope.)

There are design differences among HPSI systems that affect the scope of the components to be included for the HPSI system function. For the purpose of the safety system unavailability indicator, and where applicable, the HPSI system includes high head pumps (centrifugal charging pumps/high head safety injection pumps) which discharge at pressures of 2,200-2,500 psig and intermediate head pumps (intermediate head safety injection pumps) which discharge at pressures of 1200-1700 psig, along with associated components in the suction and discharge piping to the reactor coolant system cold-legs or hot-legs.

Train Determination

In general, the number of HPSI system trains is defined by the number of high head injection paths that provide cold-leg and/or hot-leg injection capability, as applicable. This is necessary to fully account for system redundancy.

Clarifying Notes

Many plants have charging pumps (typically, positive displacement charging pumps) that are not safety-related, provide a small volume of flow, and do not automatically start on a safety injection signal. These pumps should not be included within the scope of HPSI system for this indicator.

Some HPSI components may be included in the scope of more than one train. For example, cold-leg injection lines may be fed from a common header that is supplied by both HPSI trains. In these cases, the effects of testing or component failures in an injection line should be reported in both trains.

At many plants, recirculation of water from the reactor building sump requires that the high pressure injection pump take suction via the low pressure injection/residual heat removal pumps. For these plants, the low pressure injection/residual heat removal pumps discharge header isolation valve to the HPSI pump suction is included in the scope of HPSI system.

PWR Auxiliary Feedwater Systems

Definition and Scope

This section provides additional guidance for reporting the performance of PWR auxiliary feedwater (AFW) or emergency feedwater (EFW) systems. The AFW system provides decay heat removal via the steam generators to cool down and depressurize the reactor coolant system following a reactor trip. The AFW system is assumed to be required for an extended period of operation during which the initial supply of water from the condensate storage tank is depleted and water from an alternative water source (e.g., the service water system) is required. Therefore components in the flow paths from both of these water sources are included; however, the alternative water source (e.g., service water system) is not included.

Some plants have a startup feedwater pump that requires a manual actuation. Startup feedwater pumps are not included in the scope of the AFW system for this indicator.

Train Determination

The number of trains is determined primarily by the number of parallel pumps in the AFW system, not by the number of injection lines. For example, a system with three AFW pumps is defined as three-train system, whether it feeds two, three, or four injection lines, and regardless of the flow capacity of the pumps.

Clarifying Notes

Some AFW components, may be included in the scope of more than one train. For example, one set of flow regulating valves and isolation valves in a three-pump, two-steam generator system are included in the motor-driven pump train with which they are electrically associated, but they are also included (along with the redundant set of valves) in the turbine-driven pump train. In these instances, the effects of testing or failure of the valves should be reported in both affected trains.

Similarly, when two trains provide flow to a common header, the effect of isolation or flow regulating valve failures in paths connected to the header should be considered in both trains.

PWR Residual Heat Removal System

Definition and Scope

This section provides additional guidance for reporting the performance of the PWR residual heat removal (RHR) system for post-accident recirculation and shutdown cooling modes of operation. In the event of a loss of reactor coolant inventory, the post-accident recirculation mode is used to cool and recirculate water from the containment sump following depletion of RWST inventory. The shutdown cooling function is used to remove decay heat from the primary system following any transient requiring normal long-term heat removal from the reactor vessel.

Train Determination

The number of trains in the RHR system is determined by the number of parallel RHR heat exchangers capable of performing post-accident heat removal or shutdown cooling.

Clarifying Notes

Some components are used to provide more than one function of RHR. If a component cannot perform as designed, rendering its associated train incapable of meeting one or both of the risk significant functions, then the train is considered to be failed. Unavailable hours (if the train was required to be available for service) would be reported as a result of the component failure.

DRAFT 10/15/01

OMB Control No.: ####-####

UNITED STATES
NUCLEAR REGULATORY COMMISSION
OFFICE OF NUCLEAR REACTOR REGULATION
WASHINGTON, D.C. 20555-0001

<date>

NRC REGULATORY ISSUE SUMMARY 2001-
RESETTING FAULT EXPOSURE HOURS FOR SAFETY SYSTEM UNAVAILABILITY PERFORMANCE INDICATORS

Addressees

All holders of operating licenses for nuclear power reactors, except those who have permanently ceased operations and have certified that fuel has been permanently removed from the reactor vessel.

Intent

The U.S. Nuclear Regulatory Commission (NRC) is issuing this regulatory issue summary (RIS) to inform power reactor licensees of the new process to reset fault exposure hours for the mitigating systems' unavailability performance indicators (PIs) without overwriting historical data and changing the previous quarters' performance indicator presentation on the web. This RIS requires no action or written response on the part of the addressee.

Background Information

The NRC's Reactor Oversight Program (ROP) uses PI information, along with results from the reactor inspection program, as the basis for assessing plant performance and determining the appropriate regulatory response. PIs are objective, periodic measures of plant performance and the effectiveness of licensee programs. Current PI collection and reporting guidance is described in NEI 99-02, "Regulatory Assessment Performance Indicator Guideline," Revision 1, which was endorsed by the NRC in RIS 2001-11.

There are currently 18 PIs within the ROP organized under the seven cornerstones of safety. The mitigating systems cornerstone includes five performance indicators used to monitor the performance of key selected systems that are designed to mitigate the effects of initiating events. Four of these five mitigating systems PIs are designed to monitor the readiness of important safety systems to perform their safety functions in response to off-normal events or accidents as measured by their unavailability, including the emergency AC power system, the high pressure injection system, the high pressure heat removal system, and the residual heat removal system.

The system unavailability for each of the mitigating systems is determined by averaging the unavailabilities of each train within the system. The train unavailabilities are calculated each quarter by summing the planned unavailable hours, unplanned unavailable hours, and fault

Attachment 8

exposure unavailable hours for the past 12 quarters; then dividing by the number of hours the train was required during the previous 12 quarters.

Fault exposure unavailable hours are the time that a train spends in an undetected, failed condition. Current PI reporting guidance (i.e., NEI 99-02, Revision 1) allows fault exposure hours associated with a single item to be reset after four quarters have elapsed from discovery, provided the following specific criteria are met:

> (1) the fault exposure hours associated with the item are greater than or equal to 336 hours and the green-white threshold has been exceeded, and
>
> (2) corrective actions associated with the item to preclude recurrence of the condition have been completed by the licensee, and
>
> (3) supplemental inspection activities by the NRC have been completed and any resulting open items related to the condition causing the fault exposure have been closed out in an inspection report.

Upon meeting these criteria, the current guidance in NEI 99-02 allows licensees to remove the fault exposure hours by submitting a change report that resets the target fault exposure hours to zero for the affected quarter(s) and includes a comment to document this action. The change affects PI calculations for the quarter in which the change report is submitted as well as the prior quarters inclusively back to the quarter containing the target fault exposure hours.

Summary of Issue

The staff discovered that when licensees submit change reports to reset fault exposure hours in accordance with the current guidance in NEI 99-02, an unintended consequence occurs in that the change affects PI calculations for previous quarters in addition to the current quarter. This update inadvertently overwrites the historical data and changes the web display, giving the appearance that the fault exposure hours never existed for a given plant. This unanticipated discrepancy makes it difficult to discern and understand plant performance in prior quarters for the four safety system unavailability PIs.

To address this concern, the NRC is asking that licensees submit fault exposure reset hours using the process and format presented below. Licensees should also report any planned and unplanned unavailable hours that were previously unreported to avoid double counting. The normal quarterly PI data submittals would be unaffected; instead, change reports would be submitted only by those plants that are resetting fault exposure hours in accordance with this process. Appropriate changes have been made to NEI's PIWeb system used to generate the PI reports for submission to the NRC, as well as to the NRC's system for calculating and posting the PI information to the ROP web page. This change process will also be incorporated into NEI 99-02, Revision 2, which is expected to be issued in early 2002.

Licensees should resubmit any previously submitted fault exposure reset hours, and submit any future fault exposure reset hours, as a change report in accordance with NEI 99-02 guidance as modified by this RIS. The data submittal should conform to the general structure of the NRC PI data files as detailed in Appendix B to NEI 99-02, and should include the following information:

(1) the "reset" designation "FR" and the applicable PI, (2) the target quarter and year being reset, (3) the effective quarter and year in which all reset criteria are first met, (4) comment text that explains the reset activity, and (5) the number of fault exposure reset hours, additional planned unavailable hours, and additional unplanned unavailable hours for each train. Data files prepared by the NEI PIWeb system should already be properly formatted for submission to the NRC.

The revised calculation for the safety system unavailability will subtract out the effective reset hours from the unavailable hours before dividing by the hours each train is required. A row will also be added to the table on the web display for these "effective reset hours" for each of the safety system unavailability PIs.

Voluntary Action

Addressees should conform to the guidance contained in this RIS for the voluntary reporting of PI data. This PI data should be provided as an attachment to an e-mail addressed to <pidata@nrc.gov> on or before January 21, 2002, for the fourth quarter of calendar year 2001, and any corrections to previously submitted fault exposure reset hours. The change file can be included with other change files and/or the quarterly PI data submittal. Addressees should continue to submit change files for fault exposure reset hours in addition to their quarterly PI submittals by the 21st of the month following the end of each calendar quarter thereafter.

Backfit Discussion

This RIS requires no action or written response. Any action on the part of addressees to collect and transmit PI data in accordance with the guidance contained in this RIS is strictly voluntary and, therefore, is not a backfit under 10 CFR 50.109. Consequently, the staff did not perform a backfit analysis.

Paperwork Reduction Act Statement

This RIS contains a voluntary information collection that is subject to the Paperwork Reduction Act of 1995 (22 U.S.C. 3501 et seq.). The NRC may not conduct or sponsor, and a person is not required to respond to, a collection of information unless it displays a currently valid Office of Management and Budget (OMB) control number. The collection of this information is covered by OMB clearance number ####-#### which expires on <date>.

If there are any questions about this matter, please contact the person listed below.

David B. Matthews, Director
Division of Regulatory Improvement Programs
Office of Nuclear Reactor Regulation

NEI 99-02 Revision 1

Nuclear Energy Institute

Regulatory Assessment Performance Indicator Guideline

November~~April~~ 2001

Attachment 9

Nuclear Energy Institute, 1776 I Street N.W., Suite 400, Washington D.C. (202.739.8000)

ACKNOWLEDGMENTS

This guidance document, Regulatory Assessment Performance Indicator Guideline, NEI 99-02, was developed by the NEI Safety Performance Assessment Task Force in conjunction with the NRC staff. We appreciate the direct participation of the many utilities, INPO and the NRC who contributed to the development of the guidance.

NOTICE

Neither NEI, nor any of its employees, members, supporting organizations, contractors, or consultants make any warranty, expressed or implied, or assume any legal responsibility for the accuracy or completeness of, or assume any liability for damages resulting from any use of, any information apparatus, methods, or process disclosed in this report or that such may not infringe privately owned rights.

EXECUTIVE SUMMARY

The Nuclear Regulatory Commission has revised its regulatory oversight processes of inspection, assessment and enforcement for commercial nuclear power plants. The new processes rely primarily on two inputs: Performance Indicators and NRC Inspection Findings. The purpose of this manual is to provide the guidance necessary for power reactor licensees to collect and report the data elements that will be used to compute the Performance Indicators.

An overview of the complete oversight process is provided in NUREG 1649, " Reactor Oversight Process." More detail is provided in SECY 99-007, "Recommendations for Reactor Oversight Process Improvements," as amended in SECY 99-007A and SECY 00-049 "Results of the Revised Reactor Oversight Process Pilot Program."

This revision is effective for data collection as of January~~July~~ 1, 2002~~1~~.

Summary of Changes to NEI 99-02

Revision 1~~0~~ to Revision 2~~1~~

TO BE DEVELOPED

Page	Change
Throughout	Incorporated NRC approved FAQs into the text, primarily in the Clarifying Notes sections
Throughout	Deleted FAQ sections
2	Clarified guidance for correcting previously submitted performance indicator data
4	Removed section on applicability of NEI 99-02 Revision 0
5	Revised discussion of Frequently Asked Questions
13	Clarifies meaning of "normal heat removal path"
24	Provided more detailed discussion of restoration of equipment during testing
25	Provided more detailed discussion of treatment of Planned Overhaul Maintenance
28	Added provision to take credit for operator action to recover from an equipment malfunction or operating error
32	Revised discussion of treatment of RHR system while in shutdown
39	Clarifies that system function depends on plant's accident analysis
67-68	Revised definition of SSFF to be consistent with rule change to 10CFR50.72 and 50.73 and NUREG 1022 Rev 2
95	Clarified answer to FAQ 131 to include instances not covered in that FAQ
E-1	Added appendix identifying where FAQs were incorporated in text

TABLE OF CONTENTS

EXECUTIVE SUMMARY i

SUMMARY OF CHANGES TO NEI 99-02 ii

1 INTRODUCTION 1

Background 1
General Reporting Guidance 2
Guidance for Correcting Previously Submitted Performance Indicator Data 2
Comment Fields 3
Numerical Reporting Criteria 4
Submittal of Performance Indicator Data 4
Frequently Asked Questions 5

2 PERFORMANCE INDICATORS ..... 10~~9~~

2.1 INITIATING EVENTS CORNERSTONE ..... 10~~9~~
UNPLANNED REACTOR SHUTDOWNS~~SCRAMS~~ PER 7,000 CRITICAL HOURS ..... 10~~9~~
UNPLANNED REACTOR SHUTDOWNS~~SCRAMS~~ WITH ~~A~~ LOSS OF NORMAL HEAT REMOVAL ..... 15~~14~~
UNPLANNED POWER CHANGES PER 7,000 CRITICAL HOURS ..... 19~~19~~

2.2 MITIGATING SYSTEMS CORNERSTONE 21
SAFETY SYSTEM UNAVAILABILITY ..... 24~~25~~
ADDITIONAL GUIDANCE FOR SPECIFIC SYSTEMS ..... 42~~41~~
Emergency AC Power Systems ..... 42~~41~~
BWR High Pressure Injection Systems ..... 45~~43~~
BWR Heat Removal Systems ..... 50~~48~~
BWR Residual Heat Removal Systems ..... 52~~50~~
PWR High Pressure Safety Injection Systems ..... 58~~56~~
PWR Auxiliary Feedwater Systems ..... 65~~63~~
PWR Residual Heat Removal System ..... 70~~68~~
SAFETY SYSTEM FUNCTIONAL FAILURES ..... 73~~71~~

2.3 BARRIER INTEGRITY CORNERSTONE ..... 77~~75~~
REACTOR COOLANT SYSTEM (RCS) SPECIFIC ACTIVITY ..... 77~~75~~
REACTOR COOLANT SYSTEM LEAKAGE ..... 80~~80~~

2.4 EMERGENCY PREPAREDNESS CORNERSTONE 77

DRILL/EXERCISE PERFORMANCE ..... 83~~83~~
EMERGENCY RESPONSE ORGANIZATION DRILL PARTICIPATION ..... 89~~89~~
ALERT AND NOTIFICATION SYSTEM RELIABILITY ..... 94~~94~~

2.5 OCCUPATIONAL RADIATION SAFETY CORNERSTONE ..... 97~~97~~
OCCUPATIONAL EXPOSURE CONTROL EFFECTIVENESS ..... 97~~97~~

2.6 PUBLIC RADIATION SAFETY CORNERSTONE ..... 103~~103~~
RETS/ODCM RADIOLOGICAL EFFLUENT OCCURRENCE ..... 103~~103~~

2.7 PHYSICAL PROTECTION CORNERSTONE 101
PROTECTED AREA (PA) SECURITY EQUIPMENT PERFORMANCE INDEX ..... 108~~108~~
PERSONNEL SCREENING PROGRAM PERFORMANCE ..... 115~~115~~
FITNESS-FOR-DUTY (FFD)/PERSONNEL RELIABILITY PROGRAM PERFORMANCE 117~~118~~

APPENDICES

A. ACRONYMS & ABBREVIATIONS A-1

B. STRUCTURE AND FORMAT OF NRC PERFORMANCE INDICATOR DATA FILES B-1

C. BACKGROUND INFORMATION AND CORNERSTONE DEVELOPMENT C-1

D. PLANT SPECIFIC DESIGN ISSUES D-1

E. FREQUENTLY ASKED QUESTIONS E-1

1 INTRODUCTION

This guideline describes the data and calculations for each performance indicator in the Nuclear Regulatory Commission's (NRC) power reactor licensee assessment process. The guideline also describes the licensee quarterly indicator reports that are to be submitted to the NRC for use in its licensee assessment process.

This guideline provides the definitions and guidance for the purposes of reporting performance indicator data. No other documents should be used for definitions or guidance unless specifically referenced in this document. This guideline should not be used for purposes other than collection and reporting of performance indicator data in the NRC licensee assessment process.

Background

In 1998 and 1999, the NRC conducted a series of public meetings to develop a more objective process for assessing a licensee's regulatory and safety performance. The new process uses risk-informed insights to focus on those matters that are of safety significance. The objective is to monitor performance in three broad areas – reactor safety (avoiding accidents and reducing the consequences of accidents if they occur); radiation safety for plant workers and the public during routine operations; and protection of the plant against sabotage or other security threats.

The three broad areas are divided into cornerstones: initiating events, mitigating systems, barrier integrity, emergency preparedness, public radiation safety, occupational radiation safety and physical protection. Performance indicators are used to assess licensee performance in each cornerstone. The NRC will use a risk-informed baseline inspection process to supplement and complement the performance indicator(s). This guideline focuses on the performance indicator segment of the assessment process.

The thresholds for each performance indicator provide objective indication of the need to modify NRC inspection resources or to take other regulatory actions based on licensee performance. Table 1 provides a summary of the performance indicators and their associated thresholds.

The overall objectives of the process are to:

- improve the objectivity of the oversight processes so that subjective decisions and judgment are not central process features,
- improve the scrutability of the NRC assessment process so that NRC actions have a clear tie to licensee performance, and
- risk-inform the regulatory assessment process so that NRC and licensee resources are focused on those aspects of performance having the greatest impact on safe plant operation.

In identifying those aspects of licensee performance that are important to the NRC's mission, adequate protection of public health and safety, the NRC set high level performance goals for regulatory oversight. These goals are:

- maintain a low frequency of events that could lead to a nuclear reactor accident;
- zero significant radiation exposures resulting from civilian nuclear reactors;
- no increase in the number of offsite releases of radioactive material from civilian nuclear reactors that exceed 10 CFR Part 20 limits; and
- no substantiated breakdown of physical protection that significantly weakens protection against radiological sabotage, theft, or diversion of special nuclear materials.

These performance goals are represented in the new assessment framework as the strategic performance areas of Reactor Safety, Radiation Safety, and Safeguards.

Figure 1.0 provides a graphical representation of the licensee assessment process.

General Reporting Guidance

At quarterly intervals, each licensee will submit to the NRC the performance assessment data described in this guideline. The data is submitted electronically to the NRC by the 21st calendar day of the month following the end of the reporting quarter. If a submittal date falls on a Saturday, Sunday, or federal holiday, the next federal working day becomes the official due date (in accordance with 10 CFR 50.4). The format and examples of the data provided in each subsection show the complete data record for an indicator, and provide a chart of the indicator. These are provided for illustrative purposes only. Each licensee only sends to the NRC the data set from the previous quarter, as defined in each *Data Reporting Elements* subsection (See Appendix B) along with any changes to previously submitted data.

The reporting of performance indicators is a separate and distinct function from other NRC reporting requirements. Licensees will continue to submit other regulatory reports as required by regulations; such as, 10 CFR 50.72 and 10 CFR 50.73.

Performance indicator reports are submitted to the NRC for each power reactor unit. Some indicators are based on station parameters. In these cases the station value is reported for each power reactor unit at the station.

Issues regarding interpretation or implementation of NEI 99-02 guidance may occur during implementation. Licensees are encouraged to resolve these issues with the Region. In those instances where the NRC staff and the Licensee are unable to reach resolution, the issue should be escalated to appropriate industry and NRC management using the FAQ process.[1] In the interim period until the issue is resolved, the Licensee is encouraged to maintain open communication with the NRC. Issues involving enforcement are not included in this process.

Guidance for Correcting Previously Submitted Performance Indicator Data

In instances where data errors or a newly identified faulted condition are determined to have occurred in a previous reporting period, previously submitted indicator data are amended only to the extent necessary to correctly calculate the indicator(s) for the current reporting period.[2] This

[1] See additional information on Frequently Asked Questions later in this section and Appendix D.

[2] Changes to data collection rules or practices required by the current revision of this document will not be applied retroactively to previously submitted data. Previously submitted data will not require correction or amendment provided it was collected and reported consistent with the NEI 99-02 revision and FAQ guidance in effect at the time of submittal.

amended information is submitted using a "change report" following the guidance provided on the NEI performance indicator website (PIWeb) in the "edit" mode. For performance indicators with a long data evaluation period, e.g., 12 quarters, and depending on which reporting period the data error affects, the amended data may go back into the historical data period. The values of previous reporting periods are revised, as appropriate, when the amended data is used by the NRC to recalculate the affected performance indicator. The current report should reflect the new information, as discussed in the detailed sections of this document. In these cases, the quarterly data report should include a comment to indicate that the indicator values for past reporting periods are different than previously reported. If an LER was required and the number is available at the time of the report, the LER reference is noted.

If a performance indicator data reporting error is discovered, an amended "mid-quarter" report does not need to be submitted if both the previously reported and amended performance indicator values are within the "green" performance indicator band. In these instances, corrected data should be included in the next quarterly report along with a brief description of the reason for the change(s). If a performance indicator data error is discovered that causes a threshold to be crossed, a "mid-quarter" report should be submitted as soon as practical following discovery of the error.

In January 2000, all licensees submitted "historical performance indicator data" to support the start of the revised regulatory oversight process. This data was used by the NRC to validate performance indicator thresholds and to develop licensee inspection schedules for the revised process. The January submittal represented a "best effort" to collect and report historical data. Safety system unavailability data reported as part of the WANO performance indicators was allowed to be used without modification. A supplemental review of the WANO data to ensure it met applicable NEI 99-02 guidance was not required for the January historical data submittal. Errors in the historical data submission for any performance indicator, found subsequent to January 2000, do not require correction except as described above.

Comment Fields

The quarterly report allows comments to be included with performance indicator data. A general comment field is provided for comments pertinent to the quarterly submittal that are not specific to an individual performance indicator. A separate comment field is provided for each performance indicator. Comments included in the report should be brief and understandable by the general public. Comments provided as part of the quarterly report will be included along with performance indicator data as part of the NRC Public Web site on the oversight program. If multiple PI comments are received by NRC that are applicable to the same unit/PI/quarter, the NRC Public Web site will display all applicable comments for the quarter in the order received (e.g., If a comment for the current quarter is received via quarterly report and a comment for the same PI is received via a change report, then both comments will be displayed on the Web site. For General Comments, the NRC Public Web site will display only the latest "general" comment received for the current quarter (e.g., A "general" comment received via a change report will replace any "general" comment provided via a previously submitted quarterly report.)

Comments should be generally limited to instances as directed in this guideline. These instances include:

- Exceedance of a threshold (Comment should include a brief explanation and should be repeated in subsequent quarterly reports as necessary to address the threshold exceedance)
- Revision to previously submitted data (Comment should include a brief characterization of the change, should identify affected time periods and should identify whether the change affects the "color" of the indicator.)
- Identification of a T/2 fault exposure situation or certain design deficiencies~~y~~ affecting safety system unavailability (See specific instructions in the Safety System Unavailability section~~discussion on fault exposure unavailable hours~~)
- Resetting of fault exposure hours (See Safety System Unavailability discussion on resetting fault exposure hours)
- Unavailability of data for quarterly report (Examples include unavailability of RCS Activity data for one or more months due to plant conditions that do not require RCS activity to be calculated.)

In specific circumstances, some plants, because of unique design characteristics, may typically appear in the "increased regulatory response band," as shown in Table 1. In such cases the unique condition and the resulting impact on the specific indicator should be explained in the associated comment field. Additional guidance is provided under the appropriate indicator sections.

The quarterly data reports are submitted to the NRC under 10 CFR 50.4 requirements. The quarterly reports are to be submitted in electronic form only. Separate submittal of a paper copy is not requested. Licensees should apply standard commercial quality practices to provide reasonable assurance that the quarterly data submittals are correct. Licensees should plan to retain the data consistent with the historical data requirements for each performance indicator. For example, data associated with the barrier cornerstone should be retained for 12 months, data for safety system unavailability should be retained for 12 quarters.

The criterion for reporting is based on the time the failure or deficiency is identified, with the exception of the Safety System Functional Failure indicator, which is based on the Report Date of the LER. In some cases the time of failure is immediately known, in other cases there may be a time-lapse while calculations are performed to determine whether a deficiency exists, and in some instances the time of occurrence is not known and has to be estimated. Additional clarification is provided in specific indicator sections.

Numerical Reporting Criteria

Final calculations are rounded up or down to the same number of significant figures as shown in Table 1. Where required, percentages are reported and noted as: 9.0%, 25%.

Submittal of Performance Indicator Data

Performance indicator data should be submitted as a delimited text file (data stream) for each unit, attached to an email addressed to pidata@nrc.gov. The structure and format of the delimited text files is discussed in Appendix B. The email message can include report files containing PI data for the quarter (quarterly reports) for all units at a site and can also include any report file(s) providing changes to previously submitted data (change reports). The title/subject of the email should indicate the unit(s) for which data is included, the applicable quarter, and whether the attachment includes quarterly report(s) (QR), change report(s) (CR) or

both. The recommended format of the email message title line is "<Plant Name(s)>-<quarter/year>-PI Data Elements (QR and/or CR)" (e.g., "Salem Units 1 and 2 – 1Q2000 – PI Data Elements (QR)"). Licensees should not submit hard copies of the PI data submittal (with the possible exception of a back up if the email system is unavailable).

The NRC will send return emails with the licensee's submittal attached to confirm and authenticate receipt of the proper data, generally within 2 business days. The licensee is responsible for ensuring that the submitted data is received without corruption by comparing the response file with the original file. Any problems with the data transmittal should be identified in an email to pidata@nrc.gov within 4 business days of the original data transmittal.

Additional guidance on the collection of performance indicator data and the creation of quarterly reports and change reports is provided at the NEI performance indicator website (PIWeb).

The reports made to the NRC under the new regulatory assessment process are in addition to the standard reporting requirements prescribed by NRC regulations.

Frequently Asked Questions

The mechanism for resolving interpretation issues with NEI 99-022 is the Frequently Asked Questions (FAQ) process. FAQs and responses regarding interpretations of this guideline will be posted on the NRC Website (www.nrc.gov/NRR/OVERSIGHT/ASSESS/index.html). FAQs posted on the NRC Website represent NRC approved interpretations of performance indicator guidance and should be treated as an extension of NEI 99-02.

FAQs should be submitted as soon as possible once the Licensee and resident inspector or region have identified an issue on which there is not agreement. If the Licensee in not sure how to interpret a situation and the quarterly report is due, an FAQ should be submitted and a comment in the PI comment field would be appropriate. It is incumbent on NRC and the Licensee to work expeditiously and cooperatively, sharing concerns, questions and data in order that the issue can be resolved quickly.

The NRC Website will identify the date of original posting for FAQs and responses. Unless otherwise directed in an FAQ response, FAQs are to be applied to the data submittal for the quarter in which the FAQ was posted and beyond. For example, an FAQ with a posting date of 3/31/2000 would apply to 1st quarter 2000 PI data, submitted in April 2000 and subsequent data submittals. However, an FAQ with a posting date of 4/1/2000 would apply on a forward fit basis to 2nd quarter 2000 PI data submitted in July 2000. Licensees are encouraged to check the NRC Web site frequently, particularly at the end of the reporting period, for FAQs that may have applicability for their sites.

Questions on this guideline may be submitted by email to pihelp@nei.org. The email should include "FAQ" as part of the subject line. The emails should also provide the question and a proposed answer as well as the name and phone number of a contact person. The proposed question and answer will be reviewed by NEI staff and will be discussed with NRC staff at a public meeting. Once approved by NRC, the accepted response will be posted on the NRC

Website and incorporated into the text of this guideline when the next revision is issued (no more frequently than once per quarter).[3]

[3] Additional information on plant specific questions is available in Appendix D.

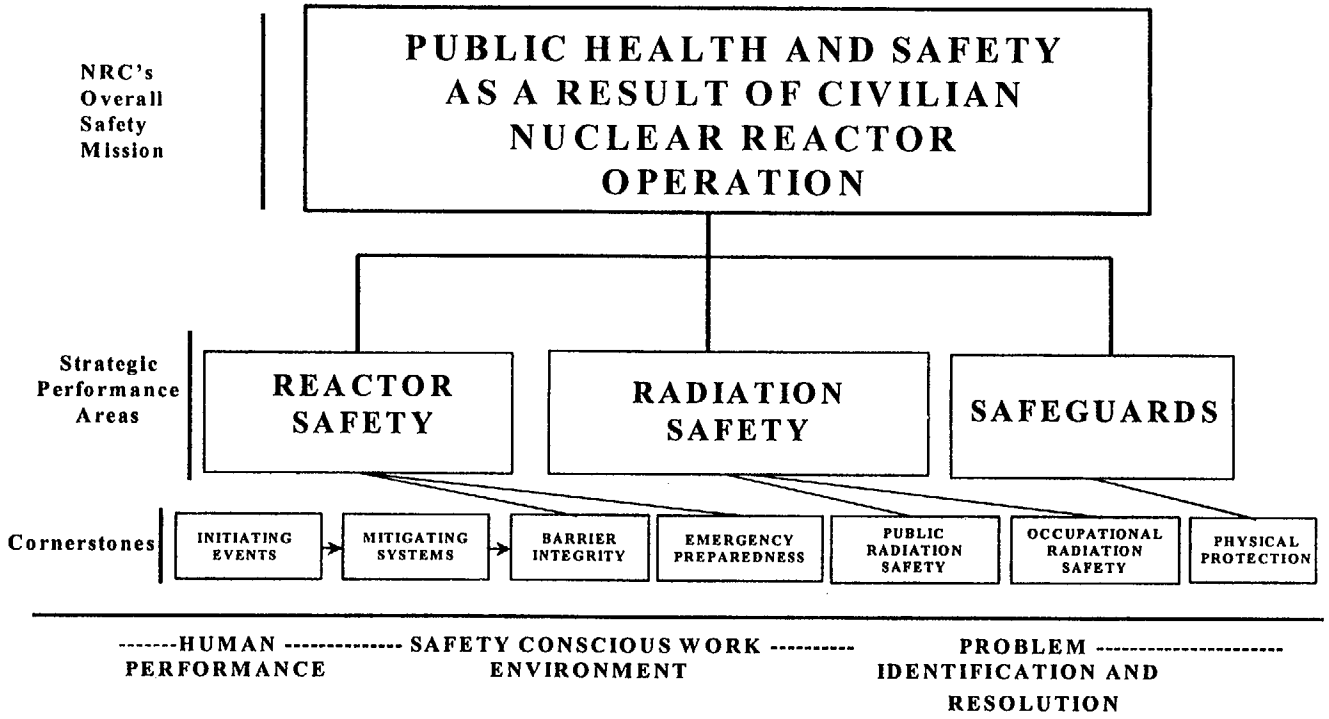

Figure 1 - Regulatory Oversight Framework

Table 1 – PERFORMANCE INDICATORS

Cornerstone	Indicator		Thresholds (see Note 1)		
			Increased Regulatory Response Band	**Required Regulatory Response Band**	**Unacceptable Performance Band**
Initiating Events	Unplanned Reactor Shutdowns ~~Scrams~~ per 7000 Critical Hours ~~(automatic and manual scrams during the previous four quarters)~~		>3.0	>6.0	>25.0
	Reactor Shutdowns ~~Scrams~~ with a Loss of Normal Heat Removal (over the previous 12 quarters)		>2.0	>10.0	>20.0
	Unplanned Power Changes per 7000 Critical Hours (over previous four quarters)		>6.0	N/A	N/A
Mitigating Systems	Safety System Unavailability (SSU) (average of previous 12 quarters)	**All Plants**			
		≤2EDG	>2.5%	>5.0%	>10.0%
		>2EDG	>2.5%	>10.0%	>20.0%
		Hydro Emerg. Power	TBD	TBD	TBD
		BWRs			
		HPCI	>4.0%	>12.0%	>50.0%
		HPCS	>1.5%	>4.0%	>20.0%
		RCIC	>4.0%	>12.0%	>50.0%
		RHR	>1.5%	>5.0%	>10.0%
		PWRs			
		HPSI	>1.5%	>5.0%	>10.0%
		AFW	>2.0%	>6.0%	>12.0%
		RHR	>1.5%	>5.0%	>10.0%
	Safety System Functional Failures (over previous four quarters)	BWRs	>6.0	N/A	N/A
		PWRs	>5.0	N/A	N/A

Note 1: Thresholds that are specific to a site or unit will be provided in Appendix D when identified.

Table 1 - PERFORMANCE INDICATORS Cont'd				
Cornerstone	**Indicator**	**Thresholds (see Note 1)**		
		Increased Regulatory Response Band	**Required Regulatory Response Band**	**Unacceptable Performance Band**
Barriers Fuel Cladding	Reactor Coolant System (RCS) Specific Activity (maximum monthly values, percent of Tech. Spec limit, during previous four quarters)	>50.0%	>100.0%	N/A
Reactor Coolant System	RCS Identified Leak Rate (maximum monthly values, percent of Tech. Spec. limit, during previous four quarters)	>50.0%	>100.0%	N/A
Emergency Preparedness	Drill/Exercise Performance (over previous eight quarters)	<90.0%	<70.0%	N/A
	ERO Drill Participation (percentage of Key ERO personnel that have participated in a drill or exercise in the previous eight quarters)	<80.0%	<60.0%	N/A
	Alert and Notification System Reliability (percentage reliability during previous four quarters)	<94.0%	<90.0%	N/A
Occupational Radiation Safety	Occupational Exposure Control Effectiveness (occurrences during previous 4 quarters)	>2	>5	N/A
Public Radiation Safety	RETS/ODCM Radiological Effluent Occurrence (occurrences during previous four quarters)	>1	>3	N/A
Physical Protection	Protected Area Security Equipment Performance Index (over a four quarter period)	>0.080	N/A	N/A
	Personnel Screening Program Performance (reportable events during the previous four quarters)	>2	>5	N/A
	Fitness-for-Duty (FFD)/Personnel Reliability Program Performance (reportable events during the previous four quarters)	>2	>5	N/A

Note 1: Thresholds that are specific to a site or unit will be provided in Appendix D when identified.

2 PERFORMANCE INDICATORS

2.1 INITIATING EVENTS CORNERSTONE

The objective of this cornerstone is to limit the frequency of those events that upset plant stability and challenge critical safety functions, during shutdown[4] as well as power operations. If not properly mitigated, and if multiple barriers are breached, a reactor accident could result which may compromise the public health and safety. Licensees can reduce the likelihood of a reactor accident by maintaining a low frequency of these initiating events. Such events include reactor ~~scram~~shutdowns due to turbine trips, loss of feedwater, loss of off-site power, and other significant reactor transients.

The indicators for this cornerstone are reported and calculated per reactor unit.

There are three indicators in this cornerstone:

- Unplanned Reactor Shutdowns ~~(automatic and manual) scrams~~ per 7,000 critical hours
- Unplanned Reactor Shutdowns ~~Scrams~~ with ~~a~~ loss of normal heat removal per 12 quarters
- Unplanned Power Changes per 7,000 critical hours

UNPLANNED REACTOR SHUTDOWNS ~~SCRAMS~~ PER 7,000 CRITICAL HOURS

Purpose

This indicator monitors the number of unplanned shutdowns of the reactor in response to off-normal conditions or events. ~~scrams.~~ It measures the frequency of unplanned reactor shutdowns per 7,000 critical hours ~~rate of scrams per year of operation at power~~ and provides an indication of initiating event frequency.

Indicator Definition

The number of unplanned shutdowns of the reactor in response to off-normal conditions or events~~scrams~~ during the previous four quarters~~, both manual and automatic,~~ while critical per 7,000 hours[5].

Data Reporting Elements

The following data are~~is~~ reported for each reactor unit:

- the number of unplanned shutdowns of the reactor~~automatic and manual scrams~~ in response to off-normal conditions or events while critical in the previous quarter

[4]Shutdown indicators are being developed and will be included in later revisions.

[5] ~~The transient rate is calculated per 7,000 critical hours because that value is representative of the critical hours of operation in a year for a typical plant.~~

- the number of hours of critical operation in the previous quarter

Calculation

The indicator is determined using the values for the previous four quarters as follows:

$$\text{value} = \frac{(\text{number of unplanned reactor shutdowns while critical in the previous 4 qtrs}) \times 7{,}000 \text{ hrs}}{(\text{total number of hours critical in the previous 4 qtrs})}$$

Definition of Terms

~~*Scram* means the shutdown of the reactor by the rapid addition of negative reactivity by any means, e.g., insertion of control rods, boron, use of diverse scram switch, or opening reactor trip breakers.~~

~~*Unplanned scram* means that the scram was not an intentional part of a planned evolution or test as directed by a normal operating or test procedure. This includes scrams that occurred during the execution of procedures or evolutions in which there was a high chance of a scram occurring but the scram was neither planned nor intended.~~
Unplanned Reactor Shutdown means the shutdown of the reactor in response to off-normal conditions or events by the unplanned addition of negative reactivity by any means, e.g., insertion of control rods, boron, or opening reactor trip breakers. Unplanned reactor shutdowns are those that bring the reactor from criticality to a shutdown mode within 15 minutes of commencing to insert negative reactivity.

Criticality, for the purposes of this indicator, typically exists when a licensed reactor operator declares the reactor critical. There may be instances where a transient initiates from a subcritical condition and is terminated by an unplanned reactor shutdown ~~scram~~ after the reactor is critical—this condition would count as an Unplanned Reactor Shutdown ~~scram~~.

Clarifying Notes

The value of 7,000 hours is used because it represents one year of reactor operation at about an 80~~.0~~% capacity factor.

If there are fewer than 2,400 critical hours in the previous four quarters the indicator value is displayed~~computed~~ as N/A because rate indicators can produce misleadingly high values when the denominator is small. The data elements ~~(unplanned scrams and critical hours)~~ are still reported.

Unplanned Reactor Shutdowns include those events which are reported under 10 CFR 50.72(b)(2)(iv)(B) which requires reporting of "any event or condition that results in actuation of the reactor protection system (RPS) when the reactor is critical except when the actuation results from and is part of a pre-planned sequence during testing or reactor operation."

Examples of off-normal conditions or events include:

Turbine Trip
Loss of Main Feedwater Flow
Loss of Normal Heat Sink (main condenser)
MSIV Closure
Loss of Offsite Power
Loss of Electrical Load (includes generator trip)
Excessive Feedwater (overcooling transient)
Loss of Auxiliary/Station Power
Small Loss of Coolant Accident (includes reactor/recirculation pump seal failures)
Loss of Service Water/Component Cooling Water
Loss of Vital AC/DC bus
Secondary/balance-of-plant Piping/Component Ruptures
Reactivity Control Anomaly (e.g., dropped or misaligned rod)
Other Initiators Leading to Automatic Actuation of Reactor Protection System
Unplanned shutdowns made in response to plant conditions in accordance with off-normal procedures (e.g., emergency procedures, abnormal operating procedures, alarm response procedures, and unplanned shutdowns to avoid exceeding a technical specification action statement time limit)

Reactor shutdowns that are not included:

Reactor shutdowns that are planned to occur as part of a test (e.g., a reactor protective system actuation test).
Reactor shutdowns that are part of a normal evolution made in accordance with normal plant procedures
Plant shutdown to comply with technical specification LCOs, if conducted in accordance with normal shutdown procedures which include a manual scram to complete the shutdown..

Included in the indicator are unplanned reactor shutdowns that occur during the execution of a procedure in which there is a high probability of a shutdown but the shutdown is not intended.

Dropped rods, single rod scrams, or half scrams are not considered unplanned reactor shutdowns~~scrams~~.

Anticipatory plant shutdowns intended to reduce the impact of external events, such as tornadoes or range fires threatening offsite power transmission lines, are excluded.

~~Examples of the types of scrams that **are included**:~~

~~□Scrams that resulted from unplanned transients, equipment failures, spurious signals, human error, or those directed by abnormal, emergency, or annunciator response procedures.~~

~~□A scram that is initiated to avoid exceeding a technical specification action statement time limit.~~

~~□A scram that occurs during the execution of a procedure or evolution in which there is a high likelihood of a scram occurring but the scram was neither planned nor intended.~~

~~Examples of scrams that **are not** included:~~

~~□Scrams that are planned to occur as part of a test (e.g., a reactor protection system actuation test), or scrams that are part of a normal planned operation or evolution.~~

~~□Reactor protection system actuation signals that occur while the reactor is sub-critical.~~

~~□Scrams that occur as part of the normal sequence of a planned shutdown and scram signals that occur while the reactor is shut down.~~

- ~~Plant shutdown to comply with technical specification LCOs, if conducted in accordance with normal shutdown procedures which include a manual scram to complete the shutdown.~~

Data Example

Unplanned Reactor Shutdowns per 7,000 Critical Hours									
	2Q/97	3Q/97	4Q/97	1Q/98	2Q/98	3Q/98	4Q/98	Prev. Qtr	
# Unpl Rx S/D in qtr	1	0	0	1	1	1	2	2	
Total Unplanned Rx				2	2	3	5	6	
S/D over 4 qtrs									
# of Hrs Crit in qtr	1500	1000	2160	2136	2160	2136	2136	1751	
Total Hrs Critical in 4 qtrs				6796	7456	8592	8568	8183	
					2Q/98	3Q/98	4Q/98	Prev. Q	
Indicator value					1.9	2.4	4.1	5.1	

Thresholds	
Green	≤3.0
White	>3.0
Yellow	>6.0
Red	>25.0

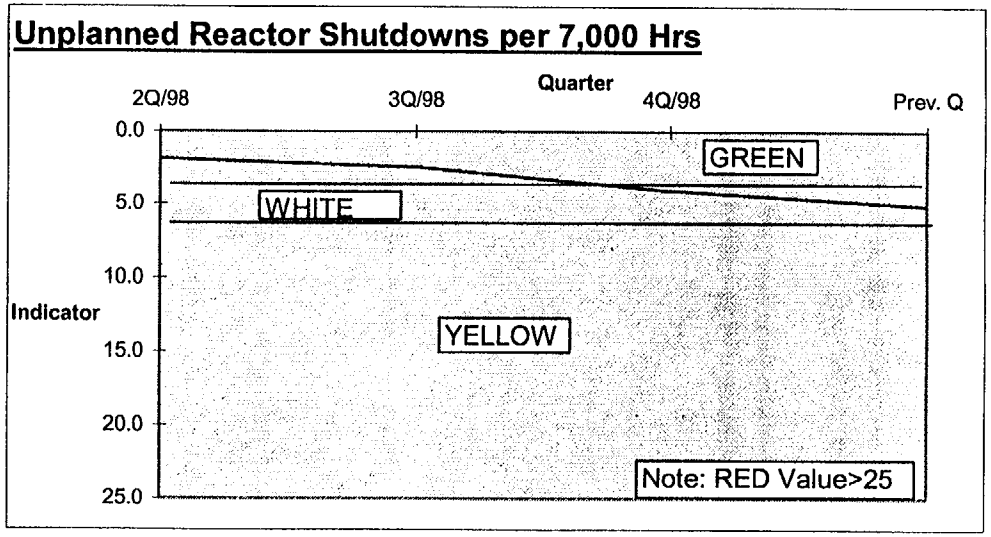

UNPLANNED REACTOR SHUTDOWNS ~~SCRAMS~~ WITH ~~A~~ LOSS OF NORMAL HEAT REMOVAL

Purpose

This indicator monitors that subset of unplanned reactor shutdowns~~unplanned and planned automatic and manual scrams~~ that were complicated by the loss of the normal heat removal path either prior to the reactor shutdown or during the reactor shutdown recovery. Such reactor shutdowns.~~that necessitate the use of mitigating systems and~~ are ~~therefore~~ more risk-significant than uncomplicated unplanned reactor shutdowns~~scrams~~.

Indicator Definition

The number of unplanned reactor shutdowns~~unplanned and planned scrams~~ while critical at or above the point of adding heat~~, both manual and automatic,~~ during the previous 12 quarters that were either caused by or ~~also~~ involved a loss of the normal heat removal path ~~through the main condenser~~ prior to establishing reactor conditions that allow use of the plant's normal long term heat removal systems.

Data Reporting Elements

The following data are~~is~~ reported for each reactor unit:

- the number of ~~planned and unplanned automatic and manual scrams~~ unplanned reactor shutdowns while critical at or above the point of adding heat in the previous quarter that were either caused by or involved a loss ~~in which~~of ~~-~~the normal heat removal path ~~through the main condenser was lost~~ prior to establishing reactor conditions that allow use of the plant's normal long term heat removal systems

Calculation

The indicator is determined using the values reported for the previous 12 quarters as follows:

value = total number of unplanned reactor ~~scrams while~~shutdowns while critical at or above the point of adding heat during ~~in~~ the previous 12 quarters that were either caused by or involved a loss of ~~in which~~ the normal heat removal path ~~through the main condenser was lost~~ prior to establishing reactor conditions that allow use of the plant's normal long term heat removal systems.

Definition of Terms

Normal heat removal path: for purposes of this ~~performance~~ indicator, the path used for heat removal from the reactor during normal plant operations. It is the same for all plants – the path from the main condenser through the main feedwater system, the steam generators (PWRs) or reactor vessel (BWRs), the main steam isolation valves (MSIVs), the turbine bypass valves, and back to the main condenser.

Loss of the normal heat removal path: when any of the following conditions have occurred and cannot be easily recovered from the control room without the need for diagnosis or repair to restore the normal heat removal path:

- complete loss of all main feedwater flow
- insufficient main condenser vacuum to remove decay heat
- complete closure of at least one MSIV~~main steam isolation valve~~ in each main steam line
- failure of turbine bypass capacity that results in insufficient bypass capability remaining to maintain reactor temperature and pressure

Unplanned reactor shutdown: the shutdown of the reactor in response to off-normal conditions or events by the unplanned addition of negative reactivity by any means, e.g., insertion of control rods, boron, or opening reactor trip breakers. Unplanned reactor shutdowns are those that bring the reactor from criticality to a shutdown mode within 15 minutes of commencing to insert negative reactivity. Unplanned reactor shutdowns do not include shutdowns which are an intentional part of a planned evolution or test as directed by normal operating or test procedure. However, they do include shutdowns that occurred during the execution of procedures or evolutions in which there was a high probability of a shutdown occurring but the shutdown was neither planned nor intended.

~~*Scram* means the shutdown of the reactor by the rapid addition of negative reactivity by any means, e.g., insertion of control rods, boron, use of diverse scram switch, or opening reactor trip breakers.~~

Criticality, for the purposes of this indicator, ~~typically exists~~ when a licensed reactor operator declares the reactor critical. There may be instances where a transient initiates from a subcritical condition and is terminated by an unplanned reactor shutdown~~scram~~ after the reactor is critical. Such an event ~~—this condition~~ would count in this indicator~~as a scram~~.

Clarifying Notes

Normal heat removal path means the loss of the normal heat removal path as defined above. The determining factor for this indicator is whether or not the normal heat removal path is *available*, not whether the operators choose to use that path or some other path.

Operator actions or design features to control the reactor cooldown rate or water level, such as closing the main feedwater valves or closing all MSIVs, are not included in this indicator as long as the normal heat removal path can be readily recovered from the control room without the need for diagnosis or repair. However, operator actions to mitigate an off-normal condition or for the safety of personnel or equipment (e.g., closing MSIVs to isolate a steam leak) are included.

Examples of a complete loss of all main feedwater flow: trip of the only operating feedwater pump during startup or while operating at reduced power; loss of a startup or an auxiliary feedwater pump normally used during plant startup; loss of all operating feed pumps following an unplanned reactor shutdown due to trips caused by low suction pressure, loss of seal water, or high water level (BWR reactor level or PWR steam generator level); unplanned reactor shutdown due to loss of all operating feed pumps; unplanned reactor shutdown in response to feed problems characteristic of a total loss of feedwater flow; and inadvertent isolation or closure of all feedwater control valves prior to an unplanned reactor shutdown.

Example of loss of turbine bypass capability: sustained use of one or more atmospheric dump valves (PWRs) or safety relief valves to the suppression pool (BWRs) after an unplanned reactor shutdown.

Examples that do not count: loss of all main feedwater flow, condenser vacuum, or turbine bypass capability caused by loss of offsite power; partial losses of condenser vacuum or turbine bypass capability after an unplanned reactor shutdown in which sufficient capability remains to remove decay heat; momentary operation of PORVs or safety relief valves; and an unplanned shutdown at low power within the capability of the PORVs if the main condenser has not yet been placed in service or has been removed from service prior to the unplanned shutdown.

~~Intentional operator actions to control the reactor water level or cooldown rate, such as securing main feedwater or closing the MSIVs, are not counted in this indicator, as long as the normal heat removal path can be easily recovered from the control room without the need for diagnosis or repair to restore the normal heat removal path. Once reaching stable plant conditions following a scram, the shutdown of main feedwater pumps in accordance with operating procedures would not count in this indicator.~~

~~Design features to limit the reactor water level, steam generator water level, or cooldown rate, such as closing the main feedwater valves on a reactor scram, are not counted in this indicator, as long as the normal heat removal path can be easily recovered from the control room without the need for diagnosis or repair to restore the normal heat removal path. Once reaching stable plant conditions following a scram, the shutdown of main feedwater pumps in accordance with operating procedures would not count in this indicator.~~

~~Events in which the normal heat removal path through the main condenser is not available and is not easily recoverable from the control room without the need for diagnosis or repair to restore the normal heat removal path are counted in this indicator.~~

~~Partial losses of condenser vacuum in which sufficient capability remains to remove decay heat are not counted in this indicator.~~

This indicator includes ~~planned and~~ unplanned reactor shutdowns~~scrams~~. Unplanned reactor shutdowns~~scrams~~ counted for this indicator are also counted for the *Unplanned Reactor Shutdowns~~Scrams~~ per 7000 Critical Hours* indicator.

~~Scrams with loss of normal heat removal at low power within the capability of the PORVs are not counted if the main condenser has not yet been placed in service, or has been removed from service.~~

~~Momentary operations of PORVs or safety relief valves are not counted as part of this indicator.~~

Data Examples

Unplanned Reactor Shutdowns with Loss of Normal Heat Removal

	3Q/95	4Q/95	1Q/96	2Q/96	3Q/96	4Q/96	1Q/97	2Q/97	3Q/97	4Q/97	1Q/98	2Q/98	3Q/98	4Q/98	Prev. Qrtr
# of S/D with loss of	0	1	0	0	0	0	0	0	0	0	0	0	0	0	0
NHR in prev qtr															
Total over 12 qtrs												1	1	0	0
												2Q/98	3Q/98	4Q/98	Prev. Q
Indicator value												1	1	0	0

Thresholds	
Green	≤2.0
White	>2.0
Yellow	>10.0
Red	>20.0

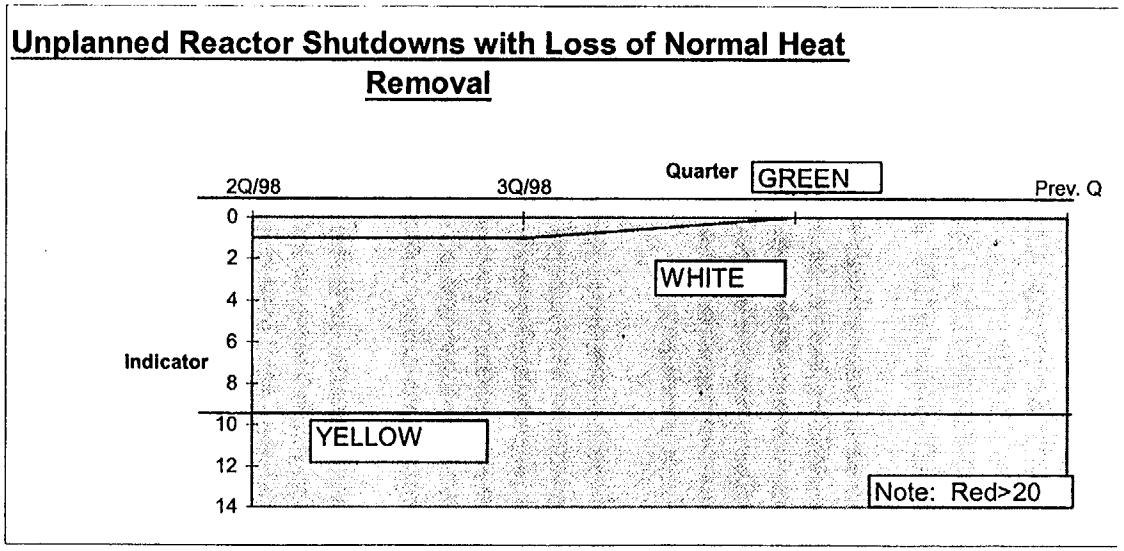

UNPLANNED POWER CHANGES PER 7,000 CRITICAL HOURS

Purpose

This indicator monitors the number of unplanned power changes (excluding ~~seram~~Unplanned Reactor Shutdowns) that could have, under other plant conditions, challenged safety functions. It may provide leading indication of risk-significant events but is not itself risk-significant. The indicator measures the number of plant power changes for a typical year of operation at power.

Indicator Definition

The number of unplanned changes in reactor power of greater than 20% of full-power, per 7,000 hours of critical operation excluding Unplanned Reactor Shutdowns ~~manual and automatic scrams~~.

Data Reporting Elements

The following data is reported for each reactor unit:

- the number of unplanned power changes, excluding ~~seram~~unplanned reactor shutdowns~~,~~ during the previous quarter
- the number of hours of critical operation in the previous quarter

Calculation

The indicator is determined using the values reported for the previous four quarters as follows:

$$\text{value} = \frac{\text{(total number of unplanned power changes over the previous 4 qtrs)}}{\text{total number of hours critical during the previous 4 qtrs}} \times 7{,}000 \text{ hrs}$$

Definition of Terms

Unplanned changes in reactor power are changes in reactor power that are initiated less than 72 hours following the discovery of an off-normal condition, and that result in, or require a change in power level of greater than 20% of full power to resolve. Unplanned changes in reactor power also include uncontrolled excursions of greater than 20% of full power that occur in response to changes in reactor or plant conditions and are not an expected part of a planned evolution or test.

Clarifying Notes

If there are fewer than 2,400 critical hours in the previous four quarters the indicator value is displayed~~computed~~ as N/A because rate indicators can produce misleadingly high values when the denominator is small. The data elements (unplanned power changes and critical hours) are still reported.

The 72 hour period between discovery of an off-normal condition and the corresponding change in power level is based on the typical time to assess the plant condition, and prepare, review, and approve the necessary work orders, procedures, and necessary safety reviews, to effect a repair.

The key element to be used in determining whether a power change should be counted as part of this indicator is the 72 hour period and not the extent of the planning that is performed between the discovery of the condition and initiation of the power change.

In developing a plan to conduct a power reduction, additional contingency power reductions may be incorporated. These additional power reductions are not counted if they are implemented to address the initial condition.

Equipment problems encountered during a planned power reduction greater than 20% that alone may have required a power reduction of 20% or more to repair are not counted as part of this indicator if they are repaired during the planned power reduction. However, if during the implementation of a planned power reduction, power is reduced by more than 20% of full power beyond the planned reduction, then an unplanned power change has occurred.

Unplanned power changes and shutdowns include those conducted in response to equipment failures or personnel errors and those conducted to perform maintenance. They do not include ~~automatic or manual scrams~~ Unplanned Reactor Shutdowns or load-follow power changes.

Apparent power changes that are determined to be caused by instrumentation problems are not included.

Unplanned power changes include runbacks and power oscillations greater than 20% of full power.

Anticipatory power reductions intended to reduce the impact of external events such as hurricanes or range fires threatening offsite power transmission lines, and power changes requested by the system load dispatchers, are excluded.

Anticipated power changes greater than 20% in response to expected problems (such as accumulation of marine debris and biological contaminants in certain seasons) which are proceduralized but cannot be predicted greater than 72 hours in advance may not need to be counted if they are not reactive to the sudden discovery of off-normal conditions. The circumstances of each situation are different and should be identified to the NRC in a FAQ so that a determination can be made concerning whether the power change should be counted.

Power changes to make rod pattern adjustments are excluded.

Power changes directed by the load dispatcher under normal operating conditions due to load demand and economic reasons, and for grid stability or nuclear plant safety concerns arising from external events outside the control of the nuclear unit are not included in this indicator. However, power reductions due to equipment failures that are under the control of the nuclear unit are included in this indicator.

Licensees should use the power indication that is used to control the plant to determine if a change of greater than 20% of full power has occurred.

This indicator captures changes in reactor power that are initiated following the discovery of an off-normal condition. If a condition is identified that is slowly degrading and the licensee prepares plans to reduce power when the condition reaches a predefined limit, and 72 hours have

elapsed since the condition was first identified, the power change does not count. If, however, the condition suddenly degrades beyond the predefined limits and requires rapid response, this situation would count.

Off-normal conditions that begin with one or more power reductions and end with an unplanned reactor trip are counted in the U~~u~~nplanned ~~reactor scram~~Reactor Shutdown - indicators only. However, if the cause of the downpower(s) and the reactor shutdown are different, an unplanned power change and a reactor shutdown must both be counted. For example, an unplanned power reduction is made to take the turbine generator off line while remaining critical to repair a component. However, when the generator is taken off line, vacuum drops rapidly due to a separate problem and the reactor is rapidly shutdown. In this case, both an unplanned power change and an unplanned reactor shutdown would be counted.[6] If an off-normal condition occurs above 20% power, and the plant is shutdown by a planned reactor trip using normal operating procedures, only an unplanned power change is counted.

Downpowers of greater than 20% of full power for ALARA reasons are counted in the indicator (FAQ 270)

[6] In this case, an Unplanned Reactor Shutdown With Loss of Normal Heat Removal would also be counted.

Data Example

Unplanned Power Changes per 7,000 Critical Hours

	2Q/97	3Q/97	4Q/97	1Q/98	2Q/98	3Q/98	4Q/98	Prev. Qtr
# of Power Changes in previous qtr	1	0	0	1	2	2	1	3
Total Power Changes in previous 4 qtrs	1	1	1	2	3	5	6	8
# of Hrs Critical in qrtr	1500	1000	2160	2136	2160	2136	2136	1751
Total Hrs Critical in previous 4 qtrs				6796	7456	8592	8568	8183
					2Q/98	3Q/98	4Q/98	Prev. Q
Indicator value					2.8	4.1	4.9	6.8

Thresholds	
Green	≤6.0
White	>6.0
Yellow	N/A
Red	N/A

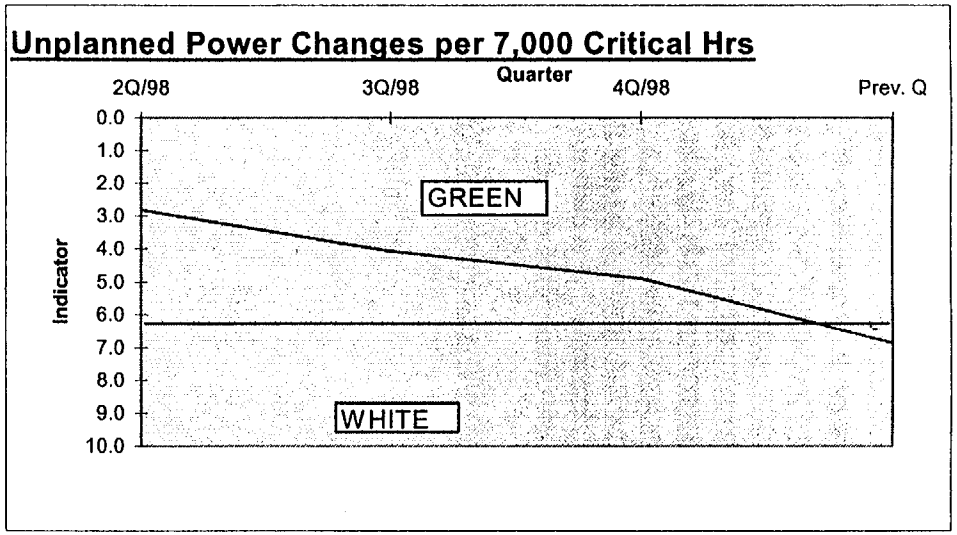

[This page intentionally left blank.]

2.2 MITIGATING SYSTEMS CORNERSTONE

~~This section defines the performance indicators used to monitor the performance of key selected systems that are designed to mitigate the effects of initiating events, and describes their calculational methods.~~
The objective of this cornerstone is to monitor the availability, reliability, and capability of systems that mitigate the effects of initiating events to prevent core damage. Licensees reduce the likelihood of reactor accidents by maintaining the availability and reliability of mitigating systems. Mitigating systems include those systems associated with safety injection, decay heat removal, and their support systems, such as emergency AC power. This cornerstone includes mitigating systems that respond to both operating and shutdown events.

The definitions and guidance contained in this section, while similar to guidance developed in support of INPO/WANO indicators and the Maintenance Rule, are unique to the ~~regulatory oversight~~Reactor Oversight Process (ROP)~~program~~.. Differences in definitions and guidance in most instances are deliberate and are necessary to meet the unique requirements of the ROP.~~regulatory oversight program.~~

While safety systems are generally thought of as those that are designed to mitigate design basis accidents, not all mitigating systems have the same risk importance. PRAs have shown that risk is often influenced not only by front-line mitigating systems, but also by support systems and equipment. Such systems and equipment, both safety- and non-safety related, have been considered in selecting the performance indicators for this cornerstone. Not all aspects of licensee performance can be monitored by performance indicators, and risk-informed baseline inspections are used to supplement these indicators.

SAFETY SYSTEM UNAVAILABILITY

Purpose

The purpose of the safety system unavailability indicator is to monitor the readiness of important safety systems to perform their safety functions in response to off-normal events or accidents.

Indicator Definition

The average of the individual train unavailabilities in the system. Train unavailability is the ratio of the hours the train is unavailable to the number of hours the train is required to be able to perform its intended safety function.

The performance indicator is calculated separately for each of the following four systems for each reactor type.

BWRs

- high pressure injection systems -- (high pressure coolant injection, high pressure core spray, feedwater coolant injection)
- heat removal systems - (reactor core isolation cooling)
- residual heat removal system
- emergency AC power system

PWRs

- high pressure safety injection system
- auxiliary feedwater system
- emergency AC power system
- residual heat removal system

Data Reporting Elements

The following elements are reported for each train for the previous quarter:

- planned unavailable hours,
- unplanned unavailable hours,
- fault exposure unavailable hours, ~~and~~
- effective reset hours,
- hours the train was required to be available for service, and~~.~~
- number of trains in the system

Sources for identifying unavailable hours can be obtained from system failure records, control room logs, event reports, maintenance work orders, etc. Preventive maintenance and surveillance test procedures may be helpful in determining if activities performed using these procedures cause systems or trains to be unavailable. These procedures may also assist in identifying the frequency of such maintenance and test activities.

Calculation

The system unavailability is determined for each reporting quarter as follows:

Train unavailability during previous 12 quarters:

$$\frac{\text{(planned unavailable hrs)} + \text{(unplanned unavailable hrs)} + \text{(fault exposure unavailable hrs)}}{\text{(hours train required during the previous 12 quarters)}}$$

$$\frac{\text{(planned unavailable hrs)} + \text{(unplanned unavailable hrs)} + \text{(fault exposure unavailable hrs)} - \text{(effective reset hrs)}}{\text{(hours train required during the previous 12 quarters)}}$$

System unavailability is the sum of the train unavailabilities divided by the number of system trains.

The indicator for each of the monitored systems is the average system unavailability over the previous 12 quarters.

For some multi-unit stations the calculation for the emergency diesel generator value could be affected by a "swing" emergency diesel generator for either unit or other units. (See Emergency AC Power section for further details.)

Definition of Terms

Planned unavailable hours: These hours include time the train was out of service for maintenance, testing, equipment modification, or any other time equipment is electively removed from service and the activity is planned in advance.

Unplanned unavailable hours: These hours include corrective maintenance time or elapsed time between the discovery and the restoration to service of an equipment failure or human error that makes the train unavailable (such as a misalignment).

Fault exposure unavailable hours: The hours that a train was in an undetected, failed condition and the time of failure has been determined. (This item is explained in more detail in the Clarifying Notes.)

T/2 fault exposure unavailable hours: The hours that a train was in an undetected, failed condition and the time of failure cannot be determined. (This item is explained in more detail in the Clarifying Notes.)

Effective reset hours: The sum of reset hours (fault exposure reset hours – delta planned hours – delta unplanned hours) during the previous 12 quarters that are *effective* (i.e., applicable) during the current quarter. (This term is explained in more detail in the Clarifying Notes.)

Hours required are the number of hours a monitored safety system is required to be available to satisfactorily perform its intended safety function.

A train consists of a group of components that together provide the monitored functions of the system (and as explained in the enclosures for specific reactor types.) Fulfilling the design basis of the system may require one or more trains of a system to operate simultaneously. The number of trains in a system is determined as follows:

- for systems that primarily pump fluids, the number of trains is equal to the number of parallel pumps or the number of flow paths in the flow system (e.g., number of auxiliary feedwater pumps). The preferred method is to use the number of pumps. For a system that contains an installed spare pump, the number of trains would equal the number of flow paths in the system.

- for systems that provide cooling of fluids, the number of trains is determined by the number of parallel heat exchangers, or the number of parallel pumps, whichever is fewer.

- emergency AC power system: the number of class 1E emergency (diesel, gas turbine, or hydroelectric) generators at the station that are installed to power shutdown loads in the event of a loss of off-site power -- This includes the diesel generator dedicated to the BWR HPCS system.

Off–normal events or accidents: These are events specified in a plant's design and licensing bases. Typically these events are specified in a plant's safety analysis report, however other events/analysis should be considered (e.g. Appendix R analysis).

Note: Additional guidance for specific systems is provided later in this section.

Clarifying Notes

The systems have been selected for this indicator based on their importance in preventing reactor core damage or extended plant outage. The selected systems include the principal systems needed for maintaining reactor coolant inventory following a loss of coolant, for decay heat removal following a reactor trip or loss of main feedwater, and for providing emergency AC power following a loss of plant off-site power.

Except as specifically stated in the indicator definition and reporting guidance, no attempt is made to monitor or give credit in the indicator results for the presence of other systems at a given plant that add diversity to the mitigation or prevention of accidents. For example, no credit is given for additional power sources that add to the reliability of the electrical grid supplying a plant because the purpose of the indicator is to monitor the effectiveness of the plant's response once the grid is lost.

Some components in a system may be common to more than one train, in which case the effect of the performance (unavailable hours) of a common component is included in all affected trains.

Unavailable hours for a multi-function system should be counted only during those times when any function monitored by this indicator is required to be available.

Trains are generally considered to be available during periodic system or equipment realignments to swap components or flow paths as part of normal operations.

It is possible for a train to be considered operable yet unavailable per the guidance in this section. The purpose of this indicator is to monitor the readiness of important safety systems to perform their safety function in response to off-normal events or accidents.

If a licensee is required to take a component out of service for evaluation and corrective actions related to a Part 21 Notification, (or if a Part 21 Notification is issued in response to a licensee identified condition), the unavailable hours must be reported. (FAQ 285)

Planned Unavailable Hours

Planned unavailable hours are hours that a train is not available for service for an activity that is planned in advance. The beginning and ending times of planned unavailable hours are known.[7] Causes of planned unavailable hours include, but are not limited to, the following:

- preventive maintenance, corrective maintenance on non-failed trains, or inspection requiring a train to be mechanically and/or electrically removed from service

- planned support system unavailability causing a train of a monitored system to be unavailable (e.g., AC or DC power, instrument air, service water, component cooling

[7]Accumulation of unavailable hours ends when the train is returned to a normal standby alignment. However, if a subsequent test (e.g., post-maintenance test) shows the train not to be capable of performing its safety function, the time between the return to normal standby alignment and the unsuccessful test is reclassified as unavailable hours.

water, or room cooling)

- testing, unless the test configuration is automatically overridden by a valid starting signal, or the function can be promptly restored either by an operator in the control room or by a dedicated operator[8] stationed locally for that purpose. Restoration actions must be contained in a written procedure[9], must be uncomplicated (*a single action or a few simple actions*), and must not require diagnosis or repair. Credit for a dedicated local operator can be taken only if (s)he is positioned at the proper location throughout the duration of the test for the purpose of restoration of the train should a valid demand occur. The intent of this paragraph is to allow licensees to take credit for restoration actions that are virtually certain to be successful (i.e., probability nearly equal to 1) during accident conditions.

  - The individual performing the restoration function can be the person conducting the test and must be in communication with the control room. Credit can also be taken for an operator in the main control room provided s(he) is in close proximity to restore the equipment when needed. Normal staffing for the test may satisfy the requirement for a dedicated operator, depending on work assignments. In all cases, the staffing must be considered in advance and an operator identified to take the appropriate prompt response for the testing configuration independent of other control room actions that may be required.

  Under stressful chaotic conditions otherwise simple multiple actions may not be accomplished with the virtual certainty called for by the guidance (e.g., lift test leads and land wires; or clearing tags). In addition, some manual operations of systems designed to operate automatically, such as manually controlling HPCI turbine to establish and control injection flow are not virtually certain to be successful.

- any modification that requires the train to be mechanically and/or electrically removed from service.

If a maintenance activity goes beyond the originally scheduled time frame, the additional hours can be considered planned unavailable hours except when due to detection of a new failed component that would prevent the train from performing its intended safety function.

Planned unavailable hours are included because portions of a system are unavailable during these planned activities when the system should be available to perform its intended safety function.

Note: It is recognized that such planned activities can have a net beneficial effect in terms of reducing unplanned unavailability and fault exposure unavailable hours (as discussed further below). If planned activities are well managed and effective, fault exposure unavailable hours and unplanned unavailable hours are minimized.

Treatment of Planned Overhaul Maintenance

[8] Operator in this circumstance refers to any plant personnel qualified and designated to perform the restoration function.

[9] Including restoration steps in an approved test procedure (FAQ 265)

Plants that perform on-line planned overhaul maintenance (i.e., within approved Technical Specification Allowed Outage Time) do not have to include planned overhaul hours in the unavailable hours for this performance indicator under the conditions noted below. Overhaul maintenance comprises those activities that are undertaken voluntarily and performed in accordance with an established preventive maintenance program to improve equipment reliability and availability. Overhauls include disassembly and reassembly of major components and may include replacement of parts as necessary, cleaning, adjustment, and lubrication as necessary. Typical major components are: diesel engine or generator, pumps, pump motor or turbine driver, or heat exchangers.

Any AOT sufficient to accommodate the overhaul hours may be considered. However, to qualify for the exemption of unavailable hours, licensees must have in place a quantitative risk assessment. This assessment must demonstrate that the planned configuration meets either the requirements for a risk-informed TS change described in Regulatory Guide 1.177, or the requirements for normal work controls described in NUMARC 93-01, Section 11.3.7.2. Otherwise the unavailable hours must be counted. The Safety System Unavailability indicator excludes maintenance-out-of-service hours on a train that is not required to be operable per technical specifications (TS). This normally occurs during reactor shutdowns. Online maintenance hours for systems that do not have installed spare trains would normally be included in the indicator. However, some licensees have been granted extensions of certain TS allowed outage times (AOTs) to perform online maintenance activities that have, in the past, been performed while shut down.

The criteria of Regulatory Guide 1.177 include demonstration that the change has only a small quantitative impact on plant risk (less than 5x10-7 incremental conditional core damage probability). It is appropriate and equitable, for licensees who have demonstrated that the increased risk to the plant is small, to exclude unavailable hours for those activities for which the extended AOTs were granted. However, in keeping with the NRC's increased emphasis on risk-informed regulation, it is not appropriate to exclude unavailable hours for licensees who have not demonstrated that the increase in risk is small. In addition, 10 CFR 50.65(a)(4), requires licensees to assess and manage the increase in risk that may result from proposed maintenance activities. Guidance on a quantitative approach to assess the risk impact of maintenance activities is contained in the latest revision of Section 11.3.7.2 of NUMARC 93-01. That section allows the use of normal work controls for plant configurations in which the incremental core damage probability is less than 10^{-6}. Licensees must demonstrate that their proposed action complies with either the requirements for a risk-informed TS change or the requirements for normal work controls described in NUMARC 93-01.

The planned overhaul maintenance may be applied once per train per operating cycle. The work may be done in two segments provided that the total time to perform the overhaul does not exceed one AOT period.

If additional time is needed to repair equipment problems discovered during the planned overhaul that would prevent the fulfillment of a safety function, the additional hours would be non-overhaul hours and/or potential fault exposure hours, and would count toward the indicator.

Other activities may be performed with the planned overhaul activity as long as the outage duration is bounded by overhaul activities. If the overhaul activities are complete, and the outage

continues due to non-overhaul activities, the additional hours would be non-overhaul hours and would count toward the indicator.

Major rebuild tasks necessitated by an unexpected component failure that would prevent the fulfillment of a safety function cannot be counted as overhaul maintenance.

This overhaul exemption does not normally apply to support systems except under unique plant-specific situations on a case-by-case basis. The circumstances of each situation are different and should be identified to the NRC so that a determination can be made. Factors to be taken into consideration for an exemption for support systems include (a) the results of a quantitative risk assessment, (b) the expected improvement in plant performance as a result of the overhaul activity, and (c) the net change in risk as a result of the overhaul activity.

Unplanned Unavailable Hours

Unplanned unavailable hours are the hours that a train is not available for service for an activity that was not planned in advance. The beginning and ending times of unplanned unavailable hours are known. Causes of unplanned unavailable hours include, but are not limited to, the following:

- corrective maintenance time following detection of a failed component that prevented the train from performing its intended safety function. (The time between failure and detection is counted as fault exposure unavailable hours, as discussed below.)

- unplanned support system unavailability causing a train of a monitored system to be unavailable (e.g., AC or DC power, instrument air, service water, component cooling water, or room cooling)

- human errors leading to train unavailability (e.g., valve or breaker mispositioning-- only the time to restore would be reported as unplanned unavailable hours-- the time between the mispositioning and discovery would be counted as fault exposure unavailable hours as discussed below)

Treatment of Fault Exposure Conditions~~Unavailable Hours~~

~~Fault exposure unavailable hours are the time that a train spends in an undetected, failed condition. Three situations involving fault exposure unavailable hours can occur.~~

1. Fault Exposure Unavailable Hours: The failure's time of occurrence and its time of discovery are known. Examples of this type of failure include events external to the equipment (e.g., a lightning strike, some mispositioning by operators, or damage caused during test or maintenance activities) that caused the train failure at a known time. For these cases, the fault exposure unavailable hours are the lapsed time between the occurrence of a failure and its time of discovery. These hours are reported as fault exposure unavailable hours and included in the calculation of safety system unavailability.

   For instances where the time of occurrence is determined to have occurred more than three years ago (12 quarters) faulted hours are only computed back for a maximum of 12 quarters.

~~For design deficiencies that occurred in a previous reporting period, fault exposure hours are not reported. However, unplanned unavailable hours are counted from the time of discovery. The indicator report is annotated to identify the presence of an old design error, and the inspection process will assess the significance of the deficiency~~.

~~The absence or inadequacy of a periodic inspection or test of a train monitored by this indicator that results in a long-standing unavailability of that train is considered, for purposes of this indicator, to be an old design issue that is not counted in the indicator~~.

2. T/2 Fault Exposure Unavailable Hours: Only the time of the failure's discovery is known with certainty. The intent of the use of the term "with certainty" is to ensure that an appropriate analysis and review to determine the time of failure is completed, documented in the corrective action program, and reviewed by management. The use of component failure analysis, circuit analysis, or event investigations are acceptable. Engineering judgment may be used in conjunction with analytical techniques to determine the time of failure. It is improper to assume that the failure occurred at the time of discovery for these failures because the assumption ignores what could be significant unavailable time prior to their discovery. Fault exposure unavailable hours for this case must be estimated. The value used to estimate the fault exposure unavailable hours for this case is: one half the time since the last successful test or operation that proved the system was capable of performing its safety function. However, the time reported is never greater than three years (12 quarters). For example, if the last successful surveillance test was 24 months ago, then the time reported would be 8760 hours (12 months). If the time since the last test was 74 months, the time reported would be 26,280 hours (36 months).

   The unavailable hours can be amended in a future report if further analysis identifies the time of failure or determines that the affected train would have been capable of performing its safety function during the worst case event for which the train is required.

   If a failure is identified when a train is not required to be available, fault exposure hours are estimated by counting from the date of the failure back to one-half the time since the last successful operation and including only those hours during that period when the train was required to be available.

   T/2 fault exposure hours, in which the time of failure is not known, are reported only in the comment section of the NRC PI data file and are not included in the calculation of safety system unavailability. (For example, the comment might read: "EDG train 1, 352 hours of T/2 fault exposure hours.") The NRC inspection process will assess the significance of the deficiency.
   ~~Note: For design deficiencies, faulted hours are not counted. However, unplanned hours are counted from the time of discovery. In these cases, the quarterly indicator report is annotated to identify the presence of a design error, and the inspection process will assess the significance of the deficiency~~.

~~3. The failure is annunciated when it occurs. For this case, there are no fault exposure unavailable hours because the time of failure is the time of discovery. These failures include the following:~~

~~□ failure of a continuously operated component, such as the trip of an operating feedwater pump that is also used to fulfill a monitored system function, such as feedwater coolant injection in some BWRs,~~

- ~~failure of a component while in standby that is annunciated in the control room, such as failure of control power circuitry for a monitored system~~,

Additional Fault Exposure Considerations

When a failed or mispositioned component that results in the loss of train function is discovered during an inspection or by incidental observation (without being tested), fault exposure unavailable hours are still reported, either as Fault Exposure Unavailable Hours or T/2 Fault Exposure Unavailable Hours.

Operator actions to recover from an equipment malfunction or an operating error can be credited if the function can be promptly restored from the control room by a qualified operator taking an uncomplicated action (a single action or a few simple actions) without diagnosis or repair (i.e., the restoration actions are virtually certain to be successful during accident conditions). Note that under stressful, chaotic conditions, otherwise simple multiple actions may not be accomplished with the virtual certainty called for by the guidance (e.g., lift test leads and land wires). In addition, some manual operations of systems designed to operate automatically, such as manually controlling HPCI turbine to establish and control injection flow, are not virtually certain to be successful. These situations should be resolved on a case-by-case basis through an FAQ.[10]

Small oil, water or steam leaks that would not preclude safe operation of the component during an operational demand and would not prevent a train from satisfying its safety function are not counted.

A train is available if it is capable of performing its safety function. For example, if a normally open valve is found failed in the open position, and this is the position required for the train to perform its function, fault exposure unavailable hours would not be counted for the time the valve was in a failed state. However, unplanned unavailable hours would be counted for the repair of the valve, if the repair required the valve to be closed or the line containing the valve to be isolated, and this degraded the full capacity or redundancy of the system.

Fault exposure unavailable hours are not counted for a failure to meet design or technical specifications, if engineering analysis determines the train was capable of performing its safety function during an operational event. For example, if an emergency generator fails to reach rated speed and voltage in the precise time required by technical specifications, the generator is not considered unavailable if the test demonstrated that it would start, load, and run as required in an emergency.

Reporting Fault Exposure Time

The fault exposure unavailable hours associated with a component failure may include unavailable hours covering several reporting periods (e.g., several quarters). The fault exposure

[10] See Appendix D for additional guidance on FAQs and examples from other licensees.

unavailable hours should be assigned to the appropriate reporting periods. For example, if a failure is discovered on the 10th day of a quarter and the estimated number of unavailable hours is 300 hours, then 240 hours should be counted for the current quarter and 60 unavailable hours should be counted for the previous quarter. Note: This will require an update of the previous quarter's data. Remove the double count by removing the planned and unplanned hours which overlap with the fault exposure hours. Put an explanation in the comment field. If you later reset~~move~~ the fault exposure hours, restore the planned and unplanned hours which had been removed.

make consistent w/ pilot

~~Removing (~~Resetting~~)~~ Fault Exposure Hours

Fault exposure hours associated with a single item may be reset~~moved~~ ~~after~~ 4 quarters ~~have elapsed~~ after the green-white threshold was crossed~~from discovery~~, provided the following criteria are met:

1. The fault exposure hours associated with the item are greater than or equal to 336 hours and the green-white threshold has been exceeded. (Note: The green-white threshold may have been crossed in the same quarter, or in a subsequent quarter.)
2. Corrective actions associated with the item to preclude recurrence of the condition have been completed by the licensee, and
3. Supplemental inspection activities by the NRC have been completed and any resulting open items related to the condition causing the fault exposure have been closed out in an inspection report.

Fault exposure hours are reset~~moved~~ by submitting a change report that provides the hours to be reset and the first quarter in which the reset hours become effective (i.e., the first quarter in which all the conditions for reset are met)~~a revision to the reported hours for the affected quarter(s)~~. The reset hours should include any planned and unplanned hours that were previously unreported. The change report should include a comment to document this action.

Data Example (Refer to the table at the end of this section.)

The table displays three categories of data for each train: *Standard*, *Reset*, and *Calculated*. The *Standard* data includes the input data elements that are required to be submitted each quarter for each train/system. The *Reset* data includes data elements that are submitted as necessary to reset fault exposure hours per applicable guidance. The *Calculated* data provides interim and final results of performance indicator calculations using the *Standard* and *Reset* data of the example.

The data example displays 16 quarters of *Standard* data for a two-train system. Of note in the example are Fault Exposure Unavailable hours reported for Train 1 and Train 2. For Train 1, fault exposure hours are indicated for 4Q97 and 1Q98. The example addresses these hours as a single event that resulted in 607 fault exposure hours spread over two reporting quarters. For Train 2, fault exposure hours are indicated for 3Q99.

The example also includes three quarters in which *Reset* data have been submitted. It is important to recognize that this example reflects the status of performance indicator data elements and calculations following the 4Q00 submittal. As such, all data for a given quarter (i.e., standard and reset) would not have been submitted concurrently. Reset data would only have been submitted following the completion of all requirements established by NEI 99-02.

Train 1 Reset Example

As noted above, the fault exposure hours for Train 1 reflect a single item. As such, the item must meet the requirements for reset.

Requirement 1 – Four quarters have elapsed from discovery
Requirement 2 – Fault exposure hours equal to or greater than 336 hours
Requirement 3 – Green-White threshold exceeded
Requirement 4 – All corrective actions completed
Requirement 5 – Supplemental inspection and resulting open items completed and closed out in an inspection report.

The Train 1 example meets the first requirement beginning with 1Q99. The second requirement is met since the total event hours exceed 336 hours. The third requirement is met beginning with the first quarter in which a PI value is calculated (4Q99) in that the PI value exceeds the G-W threshold value of 2.5%. The fourth and fifth requirements are assumed to be the limiting factors in this example and for purposes of this example, are assumed to be fully met 1Q00.

The reset data for Train 1 shows that the reset data will first become effective beginning with the calculation of the performance indicator for 1Q00 (i.e., effective quarter = 1Q00). Beginning with 1Q00, 607 fault exposure hours (103+504) will be removed from the calculation and 42 planned unavailable hours (12+30) will be added to the calculation. The 42 "delta" planned unavailable hours reflect unavailable hours that were excluded from the original reporting to avoid overlap (double counting) with fault exposure hours and must now be re-added. The combination of 607 reset hours and 42 "delta" hours results in 565 "effective reset hours" (607-42). These effective reset hours are carried forward into future quarters for a period equivalent to the original quarter plus 11 quarters. Expressed in a different way, the reset hours associated with a quarter are carried forward as long as the original fault exposure hours are included in a calculation. Thus in the Train 1 example, the effective hours for 4Q00 are decreased by 91 hours (103-12) to reflect the fact that 4Q97 data are no longer included in the performance indicator calculation for 4Q00. (Note that reset data need be input only one time. Carryover and use in the calculation for future quarters, as appropriate, is performed as part of the performance indicator calculation.)

Train 2 Reset Example
The Train 2 reset example is a simple application of the reset function. *Reset* data identifies 336 reset hours and no "delta" hours. Beginning with the effective quarter (3Q00), 336 hours will be removed from the PI calculation. These reset hours will be carried forward and used in PI calculations until 3Q02[11].

Equipment Unavailability due to Design Deficiency

Equipment failures due to design deficiency will be treated in the following manner:

Failures that are capable of being discovered during surveillance tests: These failures should be evaluated for inclusion in the equipment unavailability indicators. Examples of this type are

[11] The performance indicator calculation for 3Q02 uses data from 4Q99 through 3Q02. As such, neither the *standard* data nor the *reset* data from 3Q99 are used in the calculation for 3Q02 and beyond.

failures due to material deficiencies, subcomponent sizing/settings, lubrication deficiencies, and environmental ~~protection problems.~~ degradation

Failures that are not capable of being discovered during normal surveillance tests: These failures are usually of longer fault exposure time. These failures are amenable to evaluation through the NRC's Significance Determination Process and are excluded from the unavailability indicators. Examples of this type are failures due to pressure locking/thermal binding of isolation valves or inadequate component sizing/settings under accident conditions (not under normal test conditions). While not included in the calculation of the unavailability indicators, these failures and the associated hours should be reported in the comment field of the PI data submittal.

Hours Train Required

The term "hours train required" is associated with the hours a train is required to be available to satisfactorily perform its safety function. Unavailable hours are counted only for periods when a train is required to be available for service.

The default values identified below are typical; however, differences may exist in the number of trains required during different modes of operation. The calculational methodology accommodates differences in required train hours in these cases. The default value in the denominator can be used to simplify data collection. However, the numerator must include all unavailable hours during periods that the train is required regardless of the default value.

- Emergency AC power system. This value is estimated by the number of hours in the reporting period, because emergency generators are normally expected to be available for service during both plant operation and shutdown.

- Residual Heat Removal System. This value is estimated by the number of hours in the reporting period, because the residual heat removal system is required to be available for decay heat removal at all times.

- All other systems. This value is estimated by the number of critical hours during the reporting period, because these systems are usually required to be in service only while the reactor is critical, and for short periods during startup or shutdown. In some cases this value is already provided as part of the calculation, as in unplanned reactor shutdowns~~automatic scrams~~ per 7,000 hours critical data.

Component Failures

Unavailable hours (planned, unplanned, and fault exposure) are not reported for the failure of certain ancillary components unless the safety function of a principal component (e.g., pump, valve, emergency generator) is affected in a manner that prevents the train from performing its intended safety function. Such ancillary components include equipment associated with control, protection, and actuation functions; power supplies; lubricating subsystems; etc. For example, if there are three pressure switches arranged in a two-out-of-three logic provide low suction pressure protection for a PWR auxiliary feedwater pump, and one becomes defective, unavailable hours would not be counted because the single failure would not affect operability of the pump.

Installed Spares and Redundant Maintenance Trains

Some power plants have safety systems with extra trains to allow preventive maintenance to be carried out with the unit at power without violating the single failure criterion (when applied to the remaining trains). That is, one of the remaining trains may fail, but the system can still achieve its safety function as required by the design basis safety analysis. Such systems are characterized by a large number of trains (usually a minimum of four, but often more). To be a maintenance train, a train must not be required in the design basis safety analysis for the system to perform its safety function.

An "installed spare" is a component (or set of components) that is used as a replacement for other equipment to allow for the removal of equipment from service for preventive or corrective maintenance without violating the single failure criterion. To be an "installed spare," a component must not be required in the design basis safety analysis for the system to perform its safety function.

The following examples will help illustrate the system requirements in order to benefit from this provision:

- A system containing three 50% (flow rate and/or cooling capacity) trains would not meet the requirement since full design flow rate would not be available with one train in maintenance and one train failed (single failure criterion).

- A system with four 50% trains or three 100% trains may meet the criterion, assuming the system design flow rate and cooling requirements can be met during a design basis accident anywhere within the reactor coolant or secondary system boundaries, including unfavorable locations of LOCAs and feedwater line breaks. This statement is not intended to set new design criteria, but rather, to define the level of system redundancy required if reporting of unavailable hours on a redundant train is to be avoided.

Unavailable hours for an installed spare are counted only if the installed spare becomes unavailable while serving as replacement for another component. This includes planned and unplanned unavailable hours, and fault exposure unavailable hours. The appropriate way to estimate fault exposure hours is to count from the date of failure back to one half the time since the last successful operation and include only those hours during that period when the equipment was required to be available.

Planned unavailable hours (e.g., preventive maintenance) and unplanned unavailable hours (e.g., corrective maintenance) are not counted for a component when that component has been replaced by an installed spare.

In some designs, specific systems have a complete spare train, allowing the total replacement of one train for on-line maintenance, or increased system availability. Systems that have such extra trains generally must meet design bases requirements with one train in maintenance and a single failure of another train.

Trains that are required as backup in case of equipment failure to allow the system to meet redundancy requirements or the single failure criterion (e.g., swing components that automatically align to different trains or units) are not installed spares.

Fault exposure unavailable hours associated with failures are counted, even if the failed train/component is replaced by an installed spare while it is being repaired. For example: a pump in a high pressure safety injection system (that has an installed spare pump) fails its quarterly surveillance test. Unavailable hours reported for this failure would include the time needed to substitute the installed spare pump for the failed pump (unplanned unavailable hours), plus half the time since the last successful surveillance that demonstrated the train/system was capable of performing its safety function, or 36 months whichever is the shortest period.

In systems where there are installed spare components or trains, unavailable hours for the spare component or train are only counted against the replaced component or train. For example, if a system has an installed spare train that is valved into the system, any unavailable hours are counted against the replaced train, not the spare train. Thus, in a three train system that has one installed spare train, the number of trains in the safety system unavailability equation is two. The system unavailability is the sum of the unavailable hours divided by two.

Systems Required to be in Service at All Times

The Emergency AC power system and the residual heat removal RHR system are normally required to be in service at all times. However, planned and unplanned unavailable hours are not reported under certain conditions. The specific conditions for the emergency diesel generator are described in the Emergency Diesel Generator Section. For RHR systems, when the reactor is shutdown with fuel in the vessel, those systems or portions of systems that provide shutdown cooling can be removed from service without incurring planned or unplanned unavailable hours under the following conditions:

- RHR trains may be removed from service provided an NRC approved alternate method of decay heat removal is verified to be available for each RHR train removed from service. The intent is that at all times there will be two methods of decay heat removal available, at least one of which is a forced means of heat removal

- When the reactor is defueled or the decay heat load is so low that forced recirculation for cooling purposes, even on an intermittent basis, is no longer required (ambient losses are enough to offset the decay heat load), any train providing shutdown cooling may be removed from service without incurring planned or unplanned unavailable hours.

- When the bulk reactor coolant temperature is less than 200 F, those trains or portions of trains whose sole function is to provide suppression pool cooling (BWR) may be removed from service without incurring planned or unplanned unavailable hours.

- When portions of a single train provide both the shutdown cooling and the suppression pool cooling function, the most limiting set of reportability requirements should be used (i.e. unavailable hours and required hours are reported whenever at least one function is required.)

Fault exposure unavailable hours are always counted, even when portions of the system are removed from service as described above.

When the plant is operating, selected components that help provide the shutdown cooling function of the RHR system are normally de-energized or racked out. This does not constitute an unavailable condition for the trains that provide shutdown cooling, unless the de-energized components cannot be placed back into service before the minimum time that the shutdown cooling function would be needed (typically the time required for a plant to complete a rapid cooldown, within maximum established plant cooldown limits, from normal operating conditions).

Support System Unavailability

If the unavailability of a support system causes a train of the monitored system to be unavailable, then the hours the support system was unavailable are counted against the train as planned, unplanned, or fault exposure unavailable hours. Support systems are defined as any system required for the safety system to remain available for service. (The technical specification criteria for determining operability may not apply when determining train unavailability. In these cases, analysis or sound engineering judgment ~~may~~ be used to determine the effect of support system unavailability on the monitored system.) In many cases, for example, ~~whether~~ to determine operator actions outside the control room can be credited for restoring support systems, an FAQ should be submitted.[12] with appropriate documentation will

If the unavailability of a single support system causes a train in more than one of the monitored systems to be unavailable, the hours the support system was unavailable are counted against the affected train in each system. For example, a train outage of 3 hours in a PWR service water system caused the emergency generator, the RHR heat exchanger, the HPSI pump, and the AFW pump associated with that train to be unavailable also. In this case, 3 hours of unavailability would be reported for the associated train in each of the four systems.

If a support system is dedicated to a system and is normally in standby status, it should be included as part of the monitored system scope. In those cases, fault exposure unavailable hours caused by a failure in the standby support system that results in a loss of a train function should be reported because of the effect on the monitored system. By contrast, failures of continuously-operating support systems do not contribute to fault exposure unavailable hours in the monitored systems they support.

Unavailable hours are also reported for the unavailability of support systems that maintain required environmental conditions in rooms in which monitored safety system components are located, if the absence of those conditions is determined to have rendered a train unavailable for service at a time it was required to be available.

In some instances, unavailability of a monitored system that is caused by unavailability of a support system used for cooling need not be reported if cooling water from another source can be substituted. Limitations on the source of the cooling water are as follows:

[12] See Appendix D for additional guidance on FAQs and examples from other licensees.

- for monitored fluid systems with components cooled by a support system, where both the monitored and the support system pumps are powered by a class lE (i.e., safety grade or an equivalent) electric power source, cooling water supplied by a pump powered by a normal (non class lE--i.e., non-safety grade) electric power source may be substituted for cooling water supplied by a class lE electric power source, provided that redundancy requirements to accommodate single failure criteria for electric power and cooling water are met. Specifically, unavailable hours must be reported when both trains of a monitored system are being cooled by water provided by a single cooling water pump or by cooling water pumps powered by a single class lE power (safety grade) source.

- for emergency generators, cooling water provided by a pump powered by another class lE (safety grade) power source can be substituted, provided a pump is available that will maintain electrical redundancy requirements such that a single failure cannot cause a loss of both emergency generators.

Emergency AC power is not considered to be a support system. Unavailability of a train because of loss of AC power is counted when both the normal AC power supply and the emergency AC power supply are not available.

Data Example

	Train 1	1Q97	2Q97	3Q97	4Q97	1Q98	2Q98	3Q98	4Q98	1Q99	2Q99	3Q99	4Q99	1Q00	2Q00	3Q00	4Q00
Standard Data (Input)	Planned Unavailable Hours (quarter)	5	0	45	0	12	0	67	12	0	148	34	0	0	0	0	10
	Unplanned Unavailable Hours (quarter)	48	0	0	48	0	5	0	0	0	0	0	0	0	24	0	0
	Fault Exposure Unavailable (quarter)	0	0	0	103	504	0	0	0	0	0	0	0	0	0	0	0
	Hours Train Required for Service (quarter)	2160	2184	2208	2208	2160	2184	2208	2208	2160	2184	1104	2208	2160	2184	2208	2208
Reset Data (Input)	Δ Planned Unavailable Hours (quarter)				12	30											
	Δ Unplanned Unavailable Hours (quarter)				0	0											
	Fault Exposure Reset Hours (quarter)				103	504											
	Effective Quarter for Reset Hours				1Q00	1Q00											
Calculated	Total Hours Unavailable (12 quarter rolling sum)												1031	978	1002	957	816
	Effective Reset Hours (12 quarter)												0	565	565	565	474
	Total Hours Unavailable after adjustment (Total Hours Unavailable – Effective Reset Hours)												1031	413	437	392	342
	Total Hours Train Required for Service (12 quarter rolling sum)												25176	25176	25176	25176	25176
	Train Unavailability (Total Hours Unavailable after adjustment/Total Hours Train Required for Service)												4.1%	1.6%	1.7%	1.6%	1.4%

	Train 2	1Q97	2Q97	3Q97	4Q97	1Q98	2Q98	3Q98	4Q98	1Q99	2Q99	3Q99	4Q99	1Q00	2Q00	3Q00	4Q00
Standard Data (Input)	Planned Unavailable Hours (quarter)	2	27	0	32	0	0	49	39	129	0	12	48	0	16	12	65
	Unplanned Unavailable Hours (quarter)	0	6	0	0	48	72	80	0	0	65	0	3	0	0	0	0
	Fault Exposure Unavailable (quarter)	0	0	0	0	0	0	0	0	0	0	336	0	0	0	0	0
	Hours Train Required for Service (quarter)	2160	2184	2208	2208	2160	2184	2208	2208	2160	2184	1104	2208	2160	2184	2208	2208
Reset Data (Input)	Δ Planned Unavailable Hours (quarter)											0					
	Δ Unplanned Unavailable Hours (quarter)											0					
	Fault Exposure Reset Hours (quarter)											336					
	Effective Quarter for Reset Hours											3Q00					
Calculated	Total Hours Unavailable (12 quarter rolling sum)												948	946	929	941	974
	Effective Reset Hours (12 quarter)												0	0	0	336	336
	Total Hours Unavailable after adjustment (Total Hours Unavailable – Effective Reset Hours)												948	946	929	605	638
	Total Hours Train Required for Service (12 quarter rolling sum)												25176	25176	25176	25176	25176
	Train Unavailability (Total Hours Unavailable after adjustment/Total Hours Train Required for Service)												3.8%	3.8%	3.7%	2.4%	2.5%
	Performance Indicator Value (Sum of Train Unavailabilities divided by number of trains)												3.9%	2.7%	2.7%	2.0%	1.9%

1

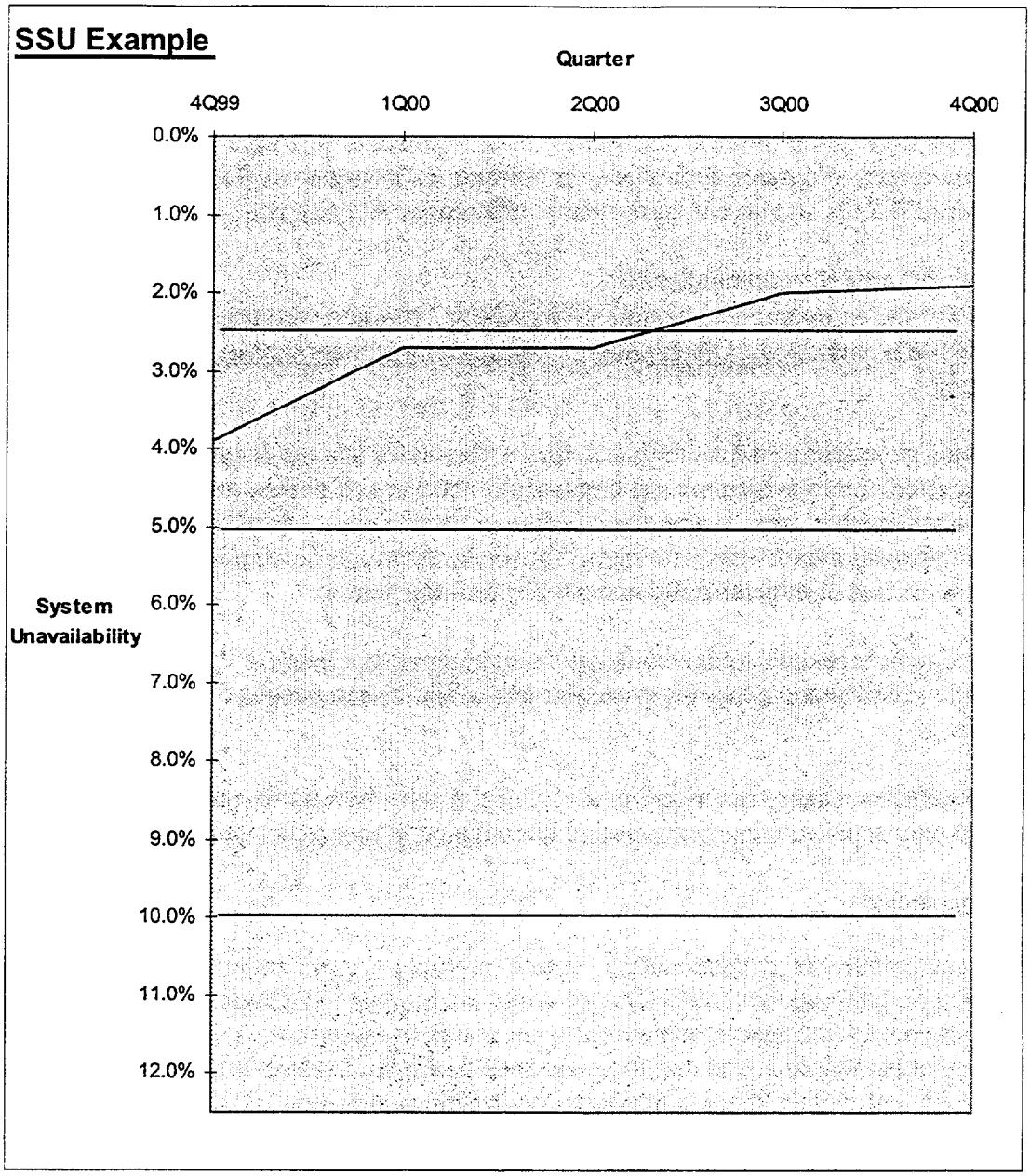
SSU Example
Quarter
4Q99
1Q00
2Q00
3Q00
4Q00
0.0%
1.0%
2.0%
3.0%
4.0%
5.0%
6.0%
7.0%
8.0%
9.0%
10.0%
11.0%
12.0%
System Unavailability

ADDITIONAL GUIDANCE FOR SPECIFIC SYSTEMS

Emergency AC Power Systems

Definition and Scope

This section provides additional guidance for reporting performance of the emergency AC power system. The emergency AC power system is typically comprised of two or more independent emergency generators that provide AC power to class 1E buses following a loss of off-site power. The emergency generator dedicated to providing AC power to the high pressure core spray system in BWRs is also within the scope of emergency AC power.

The function monitored for the indicator is:

- The ability of the emergency generators to provide AC power to the class 1E buses upon a loss of off-site power. (and, if specified in the design and licensing basis, accident conditions).

Most emergency generator trains include dedicated subsystems such as air start, lube oil, fuel oil, cooling water, etc. Support systems can include service water, DC power, and room cooling. Generally, unavailable hours are counted if a failure or unavailability of a dedicated subsystem or a support subsystem prevents the emergency generator from performing its function. Some examples are discussed in the clarifying notes for this attachment.

The electrical circuit breaker(s) that connect(s) an emergency generator to the class 1E buses that are normally served by that emergency generator are considered to be part of the emergency generator train.

Emergency generators that are not safety grade, or that serve a backup role only (e.g., an alternate AC power source), are not required to be included in the performance reporting.

Train Determination

The system unavailability is calculated on a per unit basis using the train unavailability value for each emergency diesel generator (EDG) that provides emergency AC power to that unit. The number of emergency AC power system trains for a unit is equal to the number of class 1E emergency generators that are available to power safe-shutdown loads in the event of a loss of off-site power for that unit. There are three typical configurations for EDGs at a multi-unit station:

1. EDGs dedicated to only one unit.
2. One or more EDGs are available to "swing" to either unit
3. All EDGs can supply all units

For configuration 1, the number of trains for a unit is equal to the number of EDGs dedicated to the unit. For configuration 2, the number of trains for a unit is equal to the number of dedicated EDGs for that unit plus the number of "swing" EDGs available to that unit (i.e., The "swing" EDGs are included in the train count for each unit). For configuration 3, the number of trains is equal to the number of EDGs.

Clarifying Notes

Emergency diesel generators that are dedicated to the High Pressure Core Spray (HPCS) in some BWRs should be included as a train in the Emergency AC Power calculation.

When a unit(s) is shutdown, emergency AC power trains may be removed from service in accordance with the plant's technical specifications without incurring planned or unplanned unavailable hours.

Fault exposure unavailable hours ~~are not counted~~ for failures of an EDG to start or load-run ~~if the failure can be definitely attributed to reasons~~ should be determined and reported based on ~~listed in~~ the General Clarifying Notes for Safety System Unavailability. Fault exposure hours would not be reported in the following situations:~~, or to any of the following:~~

- spurious operation of a trip that would be bypassed in the loss of offsite power emergency operating mode (e.g., high cooling water temperature trip that erroneously tripped an EDG although cooling water temperature was normal).
- malfunction of equipment that is not required to operate during the loss of offsite power emergency operating mode (e.g., circuitry used to synchronize the EDG with off-site power sources, but not required when off-site power is lost)
- a failure to start because a redundant portion of the starting system was intentionally disabled for test purposes, if followed by a successful start with the starting system in its normal alignment

When determining fault exposure unavailable hours for a failure of an EDG to load-run following a successful start, and the time the failure mechanism occurred is unknown, the last successful operation or test is the previous successful load-run (not just a successful start). To be considered a successful load-run operation or test, an EDG load-run attempt must have followed a successful start and satisfied one of the following criteria:

- a load-run of any duration that resulted from a real (e.g., not a test) manual or automatic start signal
- a load-run test that successfully satisfied the plant's load and duration test specifications
- other operation (e.g., special tests) in which the emergency generator was run for at least one hour with at least 50 percent of design load.

~~When an EDG fails to satisfy the 12/18/24-month 24-hour duration~~ surveillance test, the faulted hours are computed based on the last ~~known satisfactory load test of the diesel generator~~ as ~~defined in the three~~ bullets above. ~~For example,~~ If the EDG is shut down during a surveillance test because of a failure that would prevent the EDG from satisfying the surveillance criteria, the fault exposure unavailable hours would be computed based upon the time of the last surveillance test that would have exposed the discovered fault. The key is determining the cause of the surveillance failure. If the cause is known (and the time of failure cannot be ascertained) the T/2 fault exposure time would be reported as half the time since the last test which could have revealed the failure. This could be any of the load run tests described above, provided it was capable of identifying the failure. (Of course, the T/2 fault exposure time in this case would be reported as a comment, and would not be included in the calculation of unavailability.) (FAQ 272)

The emergency diesel generators are not considered to be available during the following portions of periodic surveillance tests unless the requirement that recovery be virtually certain during accident conditions can be satisfied:

- Load-run testing
- Fire Protection "puff" testing
- Barring

BWR High Pressure Injection Systems

(High Pressure Coolant Injection, High Pressure Core Spray, and Feedwater Coolant Injection)

Definition and Scope

This section provides additional guidance for reporting the performance of three BWR systems used primarily for maintaining reactor coolant inventory at high pressures: the high pressure coolant injection (HPCI), high pressure core spray (HPCS), and feedwater coolant injection (FWCI) systems. Plants should monitor either the HPCI, HPCS, or FWCI system, depending on which is installed. These systems function at high pressure to maintain reactor coolant inventory and to remove decay heat following a small-break Loss of Coolant Accident (LOCA) event or a loss of main feedwater event.

The function monitored for the indicator is:

~~B~~The ability of the monitored system to take suction from the suppression pool (and from the condensate storage tank, if credited in the plant's accident analysis) ~~and inject at rated pressure and flow into the reactor vessel.~~

STET

This capability is monitored for the injection and recirculation phases of the high pressure system response to an accident condition.

Figures 2.1, 2.2, and 2.3 show generic schematics for the HPCI, HPCS, and FWCI systems, respectively. These schematics indicate the components for which train unavailable hours normally are monitored. Plant-specific design differences may require other components to be included.

Train Determination

The HPCI system is considered a single-train system. The booster pump and other small pumps shown in Figure 2.1 are ancillary components not used in determining the number of trains. The effect of these pumps on HPCI performance is included in the system unavailability indicator to the extent their failure detracts from the ability of the system to perform its monitored function. The HPCI turbine, governor, and associated valves and piping for steam supply and exhaust are in the scope of the HPCI system. Valves in the feedwater line are not considered within the scope of the HPCI system.

The HPCS system is also considered a single-train system. Unavailability is monitored for the components shown in Figure 2.2. The HPCS diesel generator is considered to be part of the emergency AC power system.

For the feedwater injection system, the number of trains is determined by the number of main feedwater pumps that can be used at one time in this operating mode (typically one). Figure 2.3 illustrates a typical FWCI system.

Clarifying Notes

The HPCS system typically includes a "water leg" pump to prevent water hammer in the HPCS piping to the reactor vessel. The "water leg" pump and valves in the "water leg" pump flow path are ancillary components and are not directly included in the scope of the HPCS system for the performance indicator.

For the feedwater coolant injection system, condensate and feedwater booster pumps are not used to determine the number of trains.

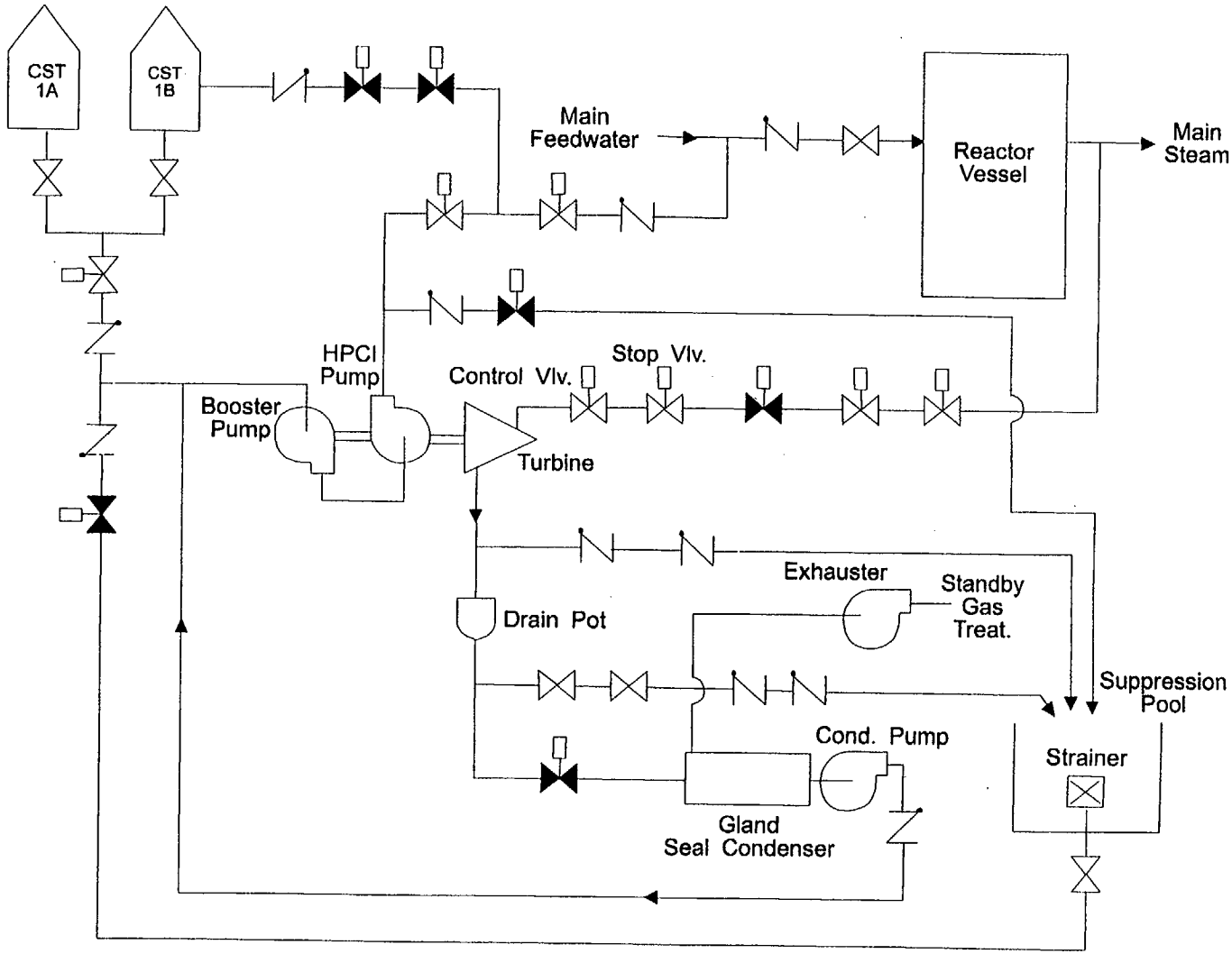

Figure 2.1
High Pressure Coolant Injection System
(Example of Reporting Scope)

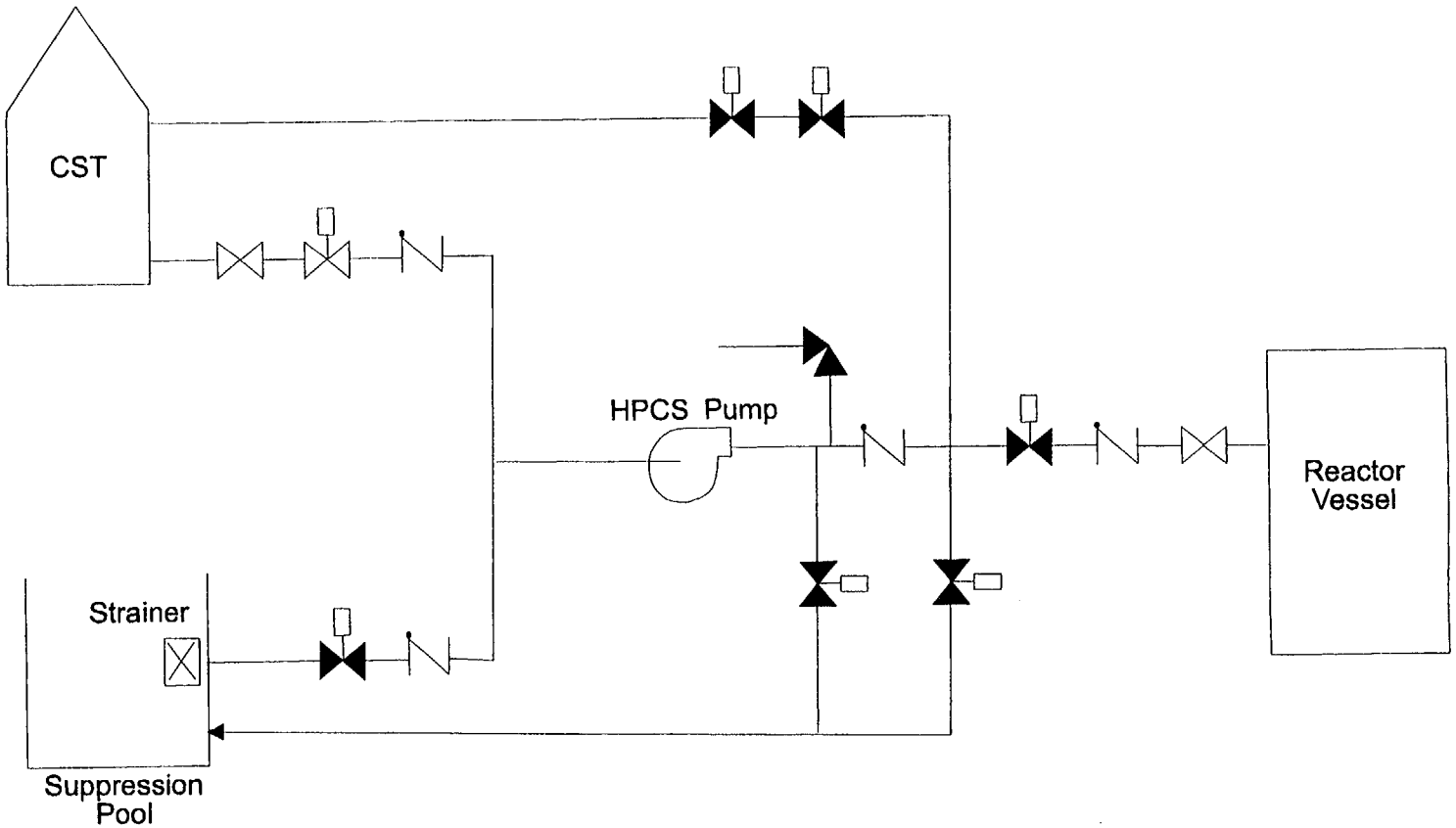

Figure 2.2
High Pressure Core Spray System
(Example of Reporting Scope)

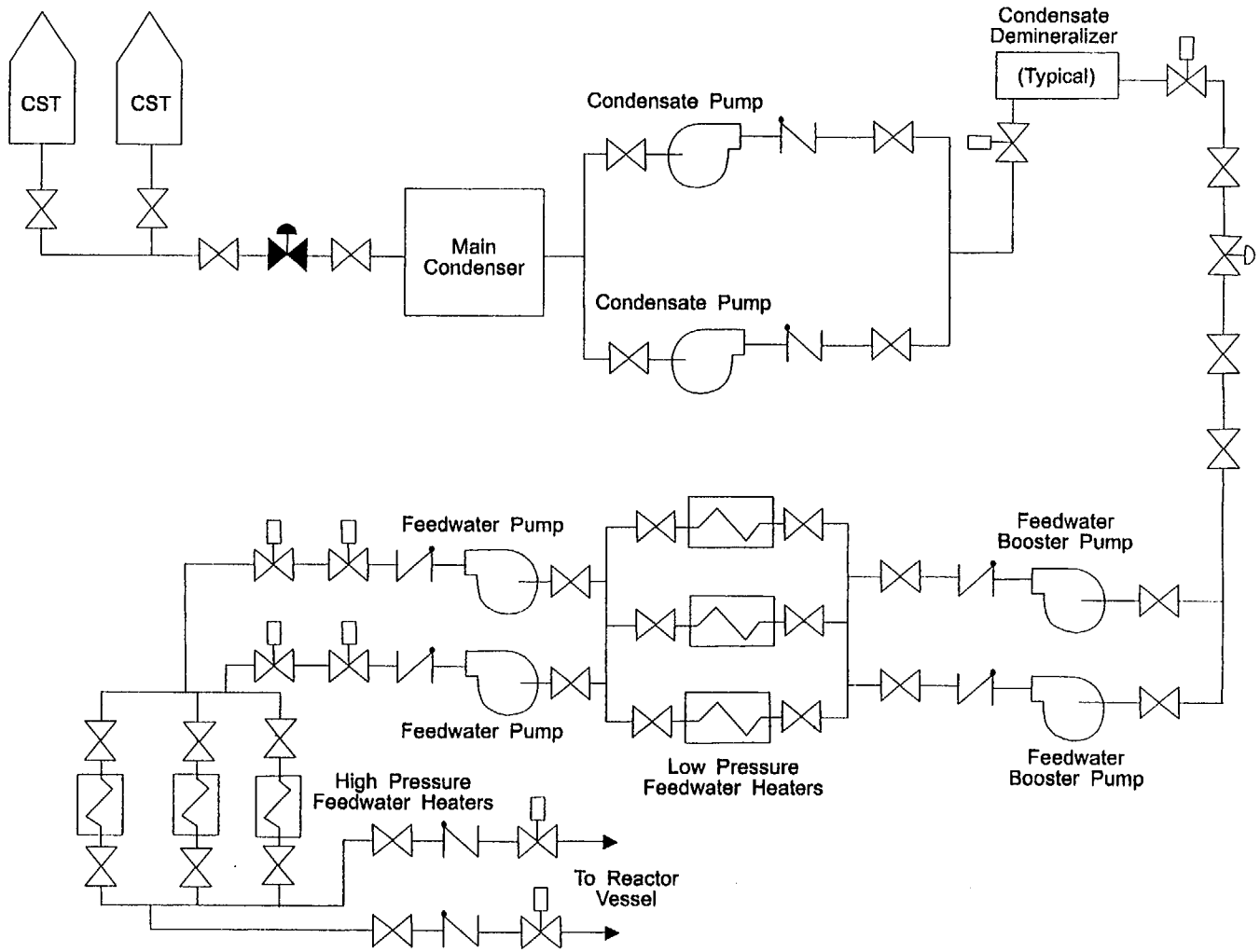

Figure 2.3
Feedwater Coolant Injection System
(Example of Reporting Scope)

BWR Heat Removal Systems

(Reactor Core Isolation Cooling)

Definition and Scope

This section provides additional guidance for reporting the performance of a BWR system that is used primarily for decay heat removal at high pressure: reactor core isolation cooling (RCIC) system. This system functions at high pressure to remove decay heat following a loss of main feedwater event. The RCIC system also functions to maintain reactor coolant inventory following a very small LOCA event.

The function monitored for the indicator, is:

- the ability of the RCIC system to cool the reactor vessel core and provide makeup water by taking a suction from either the condensate storage tank or the suppression pool and injecting at rated pressure and flow into the reactor vessel

Figures 3.1 shows a generic schematic for the RCIC system. This schematic indicates the components for which train unavailability is monitored. Plant-specific design differences may require other components to be included.

Train Determination

The RCIC system is considered a single-train system. The condensate and vacuum pumps shown in Figure 3.1 are ancillary components not used in determining the number of trains. The effect of these pumps on RCIC performance is included in the system unavailability indicator to the extent that a component failure results in an inability of the system to perform its monitored function. The RCIC turbine, governor, and associated valves and piping for steam supply and exhaust are in the scope of the RCIC system. Valves in the feedwater line are not considered within the scope of the RCIC system.

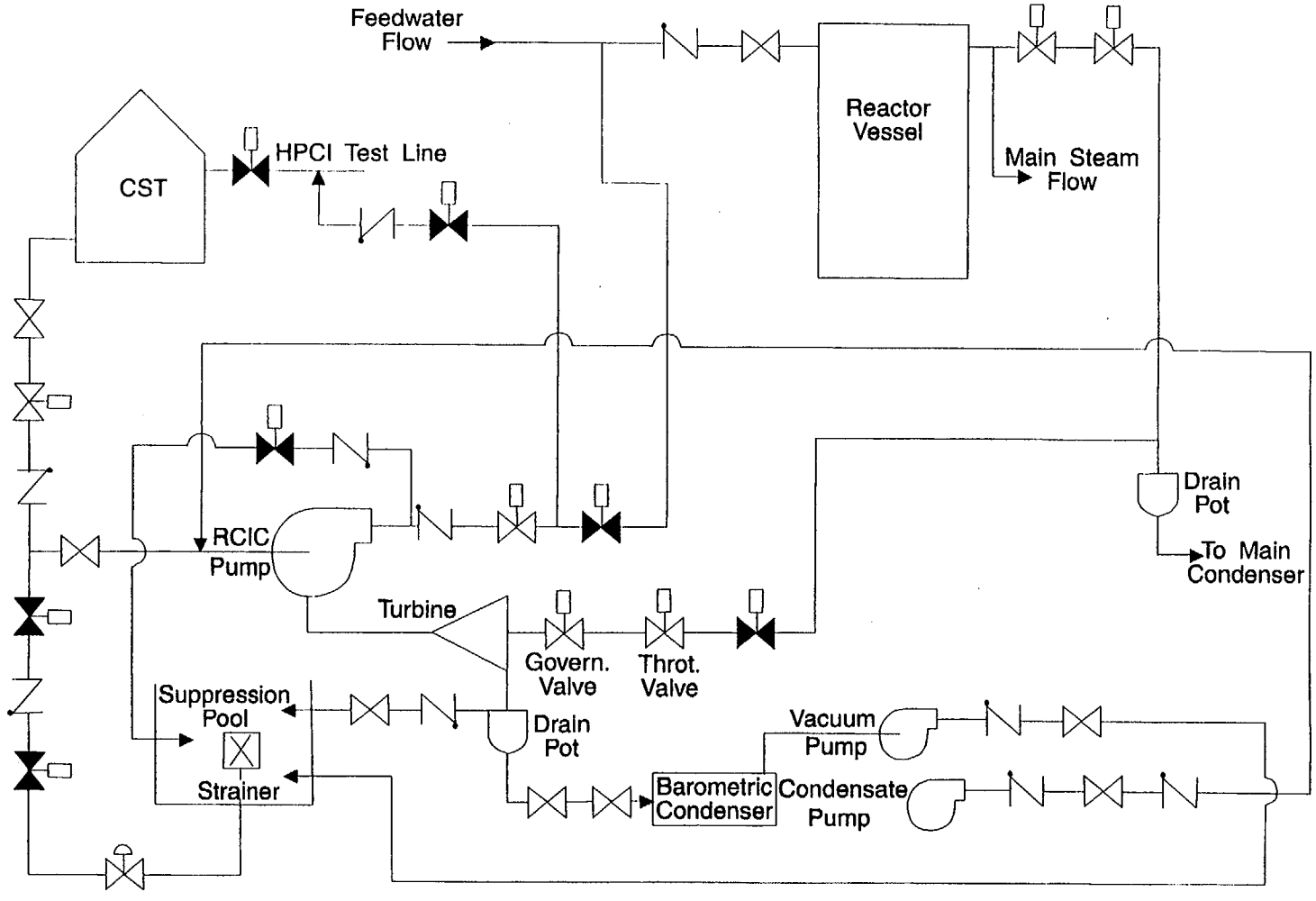

Figure 3.1
Reactor Core Isolation Cooling System
(Example of Reporting Scope)

BWR Residual Heat Removal Systems

Definition and Scope

This section provides additional guidance for reporting the performance of the BWR residual heat removal (RHR) system for the suppression pool cooling and shutdown cooling modes. The attachment also includes guidance for reporting performance of other systems used to remove heat to outside containment under low pressure conditions at early BWRs where two separate systems provide these functions with unique designs. The suppression pool cooling function is used whenever the suppression pool (or torus) water temperature exceeds or is expected to exceed a high-temperature setpoint (for example, following most relief valve openings or during some post-accident recoveries). The shutdown cooling function is used following any transient requiring normal long-term heat removal from the reactor vessel.

The functions monitored for the indicator are:

- the ability of the RHR system to remove heat from the suppression pool so that pool temperatures do not exceed plant design limits, and

- the ability of the RHR system to remove decay heat from the reactor core during a normal unit shutdown (e.g., for refueling or for servicing).

Figures 4.1 and 4.2 show generic schematics with the RHR system in the suppression pool cooling and shutdown cooling modes, respectively. Two variations of basic RHR system design are shown in Figures 4.3 and 4.4. These are included to illustrate reporting for systems with redundant and series components, respectively. The figures indicate the components for which train unavailability is monitored. Plant-specific design differences may require other components to be included.

Train Determination

The number of trains in the RHR system is determined by the number of parallel RHR heat exchangers capable of performing suppression pool cooling or shutdown cooling. The following discussion demonstrates train determination for various generic system designs.

Figures 4.1 and 4.2 illustrate a common RHR system that incorporates four pumps and two heat exchangers arranged so that each heat exchanger can be supplied by one of two pumps. This is a two-train RHR system.

Some trains have two heat exchangers in series, as shown in Figure 4.3. The system depicted in Figure 4.3 is also a two-train RHR system.

Figure 4.4 shows an arrangement with four parallel sets of a pump and a heat exchanger combination. This system is a four-train RHR system.

Other Systems: For some early BWRs, separate systems are used to remove heat to outside the containment under low pressure conditions. Depending on the particular design, one or more of the following systems may be used: shutdown cooling, containment spray, or RHR (torus cooling function). For example, a unit using a shutdown cooling system (with three heat exchangers)and a containment spray system (with two heat exchangers) would monitor each system separately for the safety system unavailability indicators. All components required for each safety system to perform its heat removal function should be included in the scope. The number of trains is determined by the number of heat exchangers in the systems that perform the heat removal function under low pressure conditions (five trains in this example).

Clarifying Notes

The low pressure coolant injection (LPCI), steam cooling, and containment spray modes of RHR operation are not monitored.

Some components are used to provide more than one function of RHR. If a component cannot perform as designed, rendering its associated train incapable of meeting one or both of the monitored functions, then the train is considered to be failed. Unavailable hours (if the train was required to be available for service) would be reported as a result of the component failure.

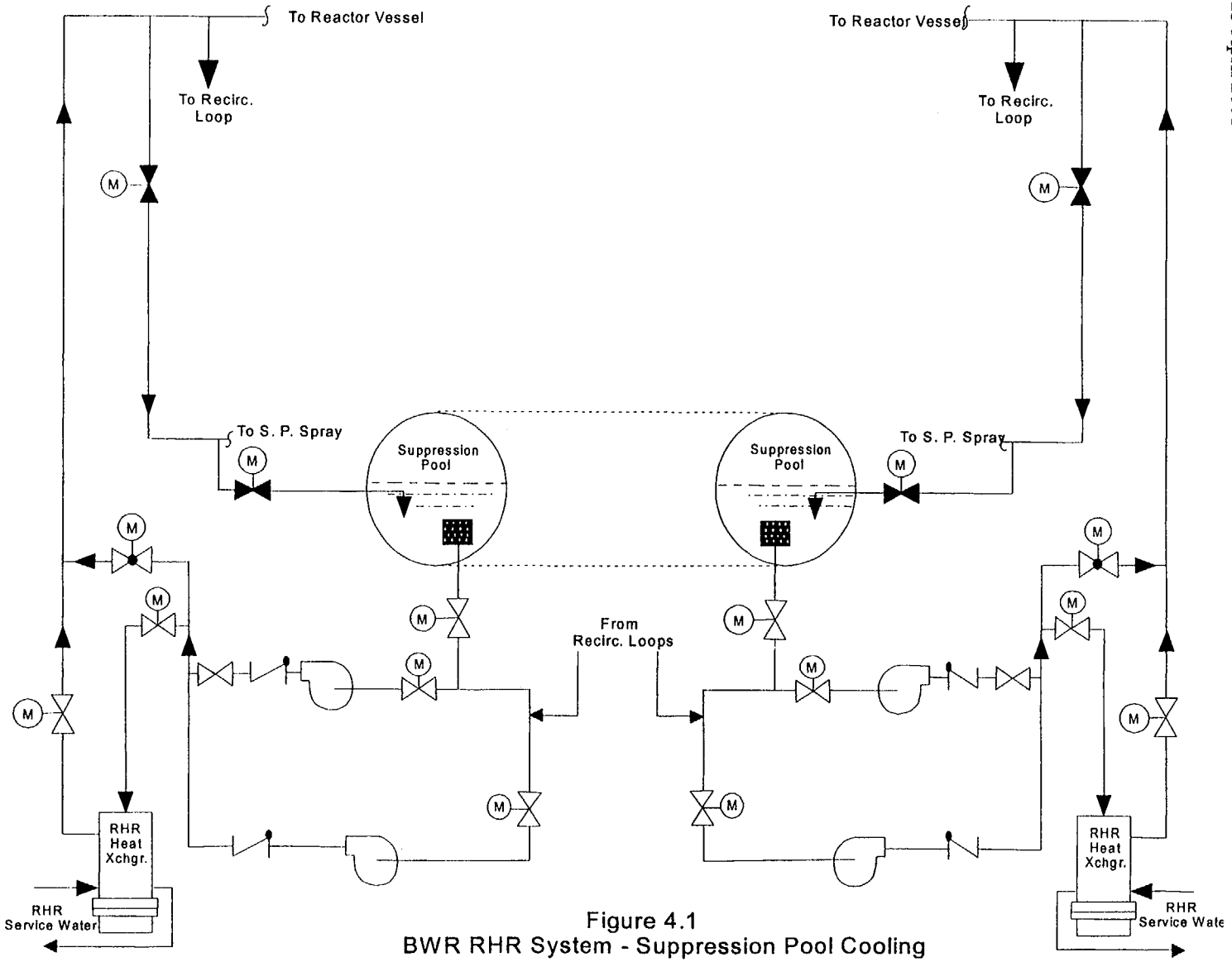

Figure 4.1
BWR RHR System - Suppression Pool Cooling

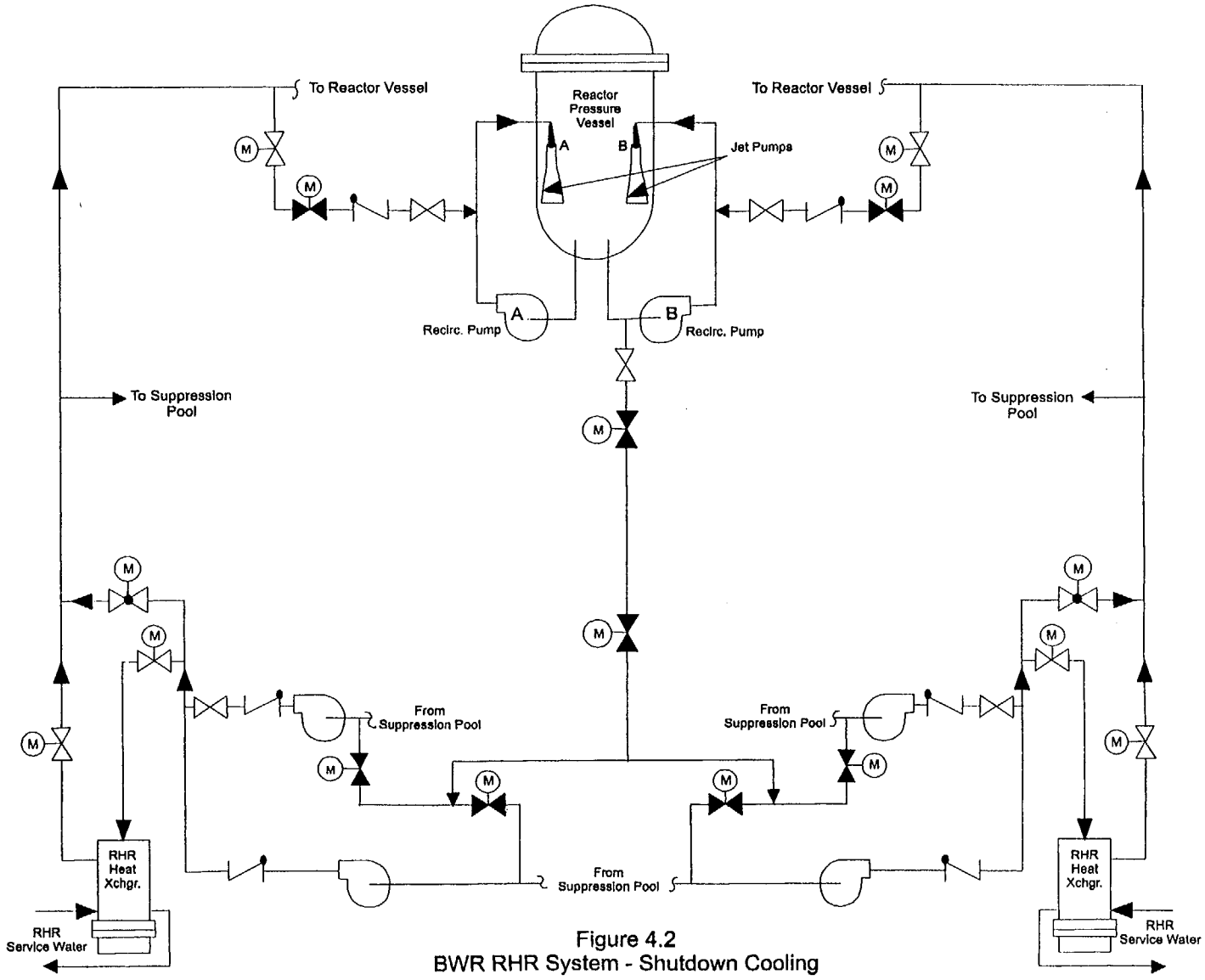

Figure 4.2
BWR RHR System - Shutdown Cooling

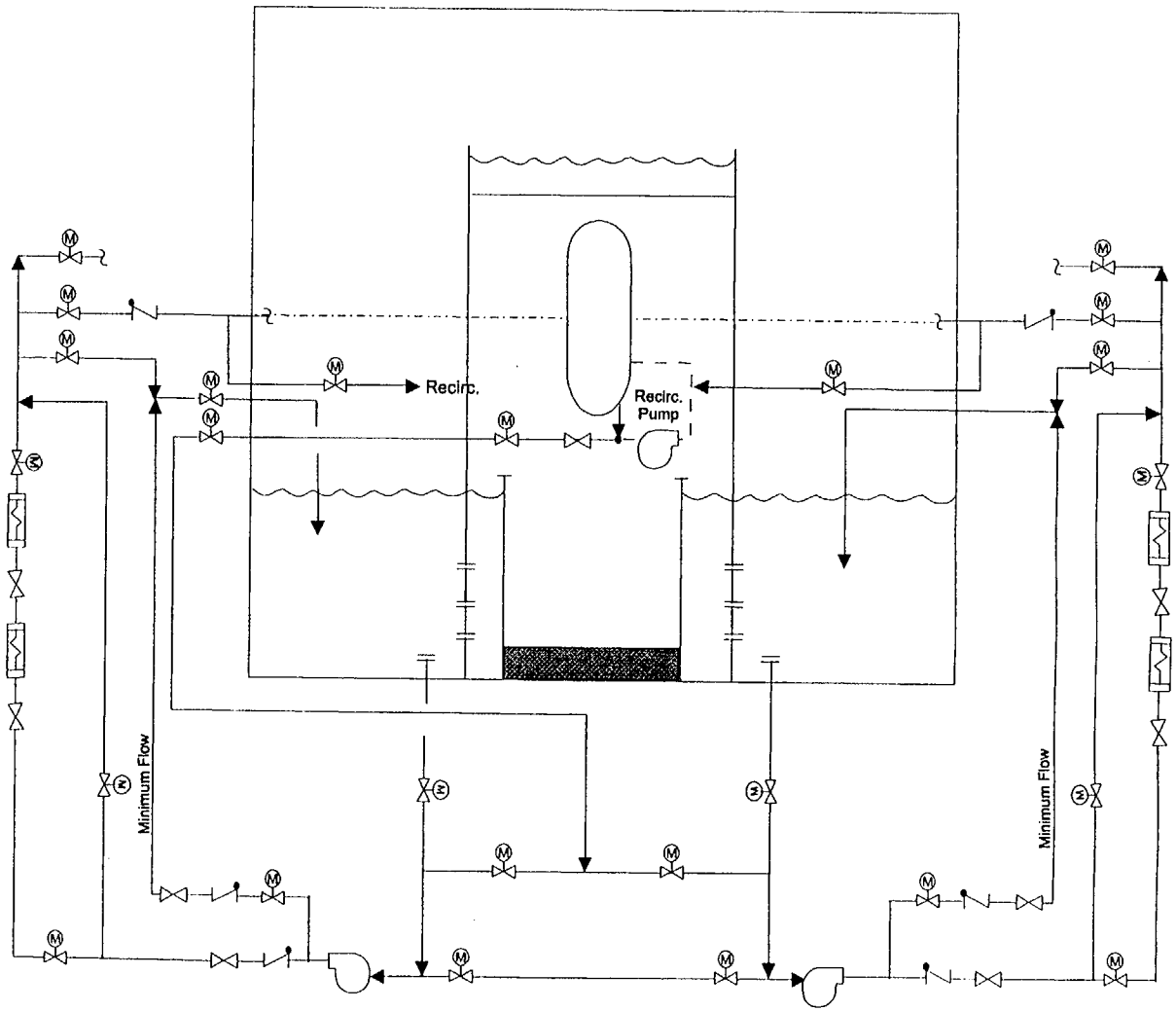

Figure 4.3
Two-Train BWR RHR System
(Example of Reporting Scope)

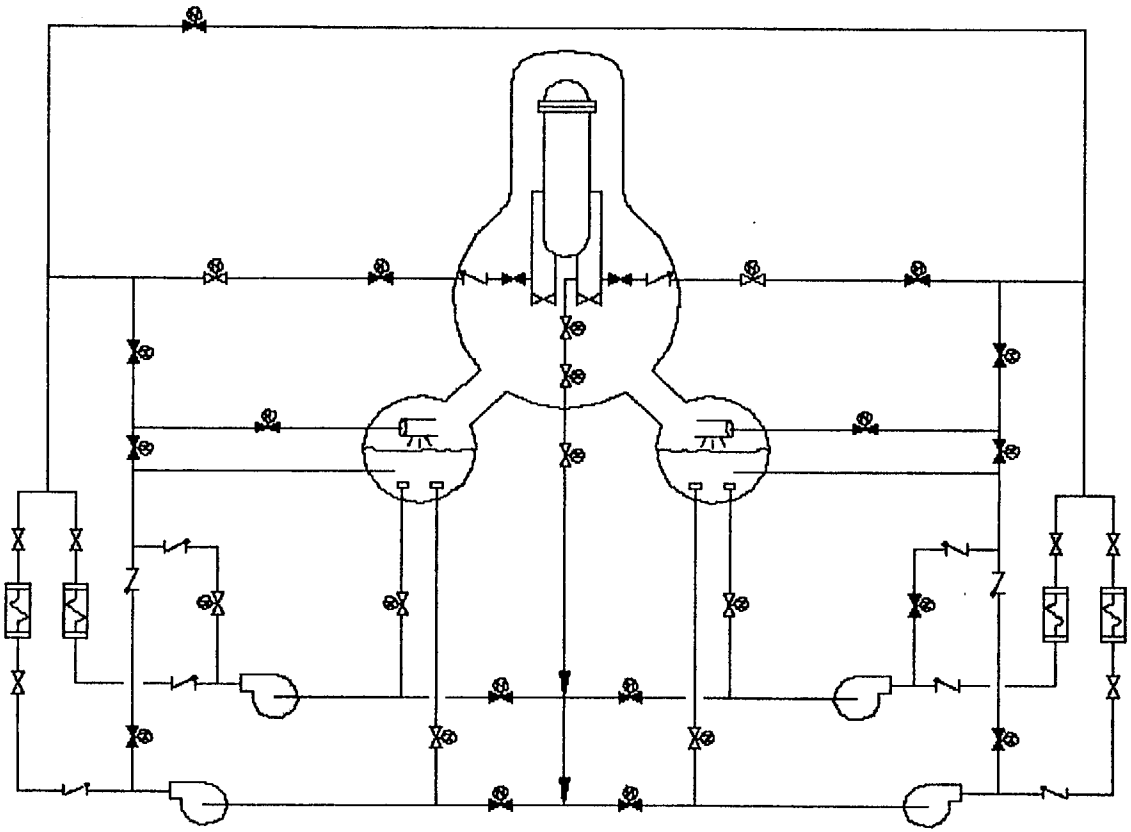

Figure 4.4 - 4 Train BWR RHR System

PWR High Pressure Safety Injection Systems

Definition and Scope

This section provides additional guidance for reporting the performance of PWR high pressure safety injection (HPSI) systems. These systems are used primarily to maintain reactor coolant inventory at high pressures following a loss of reactor coolant. HPSI system operation following a small-break LOCA involves transferring an initial supply of water from the refueling water storage tank (RWST) to cold leg piping of the reactor coolant system. Once the RWST inventory is depleted, recirculation of water from the reactor building emergency sump is required. Components in the flow paths from each of these water sources to the reactor coolant system piping are included in the scope for the HPSI system. (Because RHR and HPSI are monitored as separate systems with each having its own performance indicator, there is no need to cascade RHR system unavailability into HPSI. RHR system unavailability includes the system upstream of the RHR system to HPSI system isolation valves. Unavailability of the isolation valves between the RHR system and the HPSI pump suction are only counted against the HPSI system. (FAQ 280)~~Because the residual heat removal system has been added to the PWR scope, the isolation valve(s) between the RHR system and the HPSI pump suction is the boundary of the HPSI system. The RHR pumps used for piggyback operation are no longer in HPSI scope.~~)

There are design differences among HPSI systems that affect the scope of the components to be included for the HPSI system function. For the purpose of the safety system unavailability indicator, and where applicable, the HPSI system includes high head pumps (centrifugal charging pumps/high head safety injection pumps) which discharge at pressures of 2,200-2,500 psig and intermediate head pumps (intermediate head safety injection pumps) which discharge at pressures of 1200-1700 psig, along with associated components in the suction and discharge piping to the reactor coolant system cold-legs or hot-legs.

The function monitored for HPSI is:

- the ability of a HPSI train to take a suction from the primary water source (typically, a borated water tank), or from the containment emergency sump, and inject into the reactor coolant system at rated flow and pressure.

The charging and seal injection functions provided by centrifugal charging pumps in some system designs are not included within the scope of the safety system unavailability indicator reports.

Figures 5.1 through 5.4 show some typical HPSI system configurations for which train functions are monitored. The figures contain variations that are somewhat reactor vendor specific. They also indicate the components for which train unavailability is monitored. Plant-specific design differences may require other components to be included.

Train Determination

In general, the number of HPSI system trains is defined by the number of high head injection paths that provide cold-leg and/or hot-leg injection capability, as applicable. This is necessary to fully account for system redundancy.

Figure 5.1 illustrates a typical HPSI system for Babcock and Wilcox (B&W) reactors. The design features centrifugal pumps used for high pressure injection (about 2,500 psig) and no hot-leg injection path. Recirculation from the containment sump requires operation of pumps in the residual heat removal system. The system in Figure 5.1 is a two-train system, with an installed spare pump (depending on plant-specific design) that can be aligned to either train.

HPSI systems in some older, two-loop Westinghouse plants may be similar to the system represented in Figure 5.1, except that the pumps operate at a lower pressure (about 1600 psig) and there may be a hot-leg injection path in addition to a cold-leg injection path (both are included as a part of the train).

Figure 5.2 is typical of HPSI designs in Combustion Engineering (CE) plants. The design features three centrifugal pumps that operate at intermediate pressure (about 1300 psig) and provide flow to two cold-leg injection paths or two hot-leg injection paths. In most designs, the HPSI pumps take suction directly from the containment sump for recirculation. In these cases, the sump suction valves are included within the scope of the HPSI system. This is a two-train system (two trains of combined cold-leg and hot-leg injection capability). One of the three pumps is typically an installed spare that can be aligned to either train or only to one of the trains (depending on plant-specific design).

A HPSI system typical of those installed in Westinghouse three-loop plants is shown in Figure 5.3. This design features three centrifugal pumps that operate at high pressure (about 2500 psig), a cold-leg injection path through the BIT (with two trains of redundant valves), an alternate cold-leg injection path, and two hot-leg injection paths. One of the pumps is considered an installed spare. Recirculation is provided by taking suction from the RHR pump discharges. A train consists of a pump, the pump suction valves and boron injection tank (BIT) injection line valves electrically associated with the pump, and the associated hot-leg injection path. The alternate cold-leg injection path is required for recirculation, and should be included in the train with which its isolation valve is electrically associated. Thus, Figure 5.3 represents a two-train HPSI system.

Four-loop Westinghouse plants may be represented by Figure 5.4. This design features two centrifugal pumps that operate at high pressure (about 2500 psig), two centrifugal pumps that operate at an intermediate pressure (about 1600 psig), a BIT injection path (with two trains of injection valves), a cold-leg safety injection path, and two hot-leg injection paths. Recirculation is provided by taking suction from the RHR pump discharges. Each of two high pressure trains is comprised of a high pressure centrifugal pump, the pump suction valves and BIT valves that are electrically associated with the pump. Each of two intermediate pressure trains is comprised of the safety injection pump, the suction valves and the hot-leg injection valves electrically associated with the pump. The cold-leg safety injection path can be fed with either safety injection pump, thus it should be associated with both intermediate pressure trains. The HPSI system represented in Figure 5.4 is considered a four-train system for monitoring purposes.

Clarifying Notes

Many plants have charging pumps (typically, positive displacement charging pumps) that are not safety-related, provide a small volume of flow, and do not automatically start on a safety injection signal. These pumps should not be included within the scope of HPSI system for this indicator.

Some HPSI components may be included in the scope of more than one train. For example, cold-leg injection lines may be fed from a common header that is supplied by both HPSI trains. In these cases, the effects of testing or component failures in an injection line should be reported in both trains.

At many plants, recirculation of water from the reactor building sump requires that the high pressure injection pump take suction via the low pressure injection/residual heat removal pumps. For these plants, the low pressure injection/residual heat removal pumps discharge header isolation valve to the HPSI pump suction is included in the scope of HPSI system.

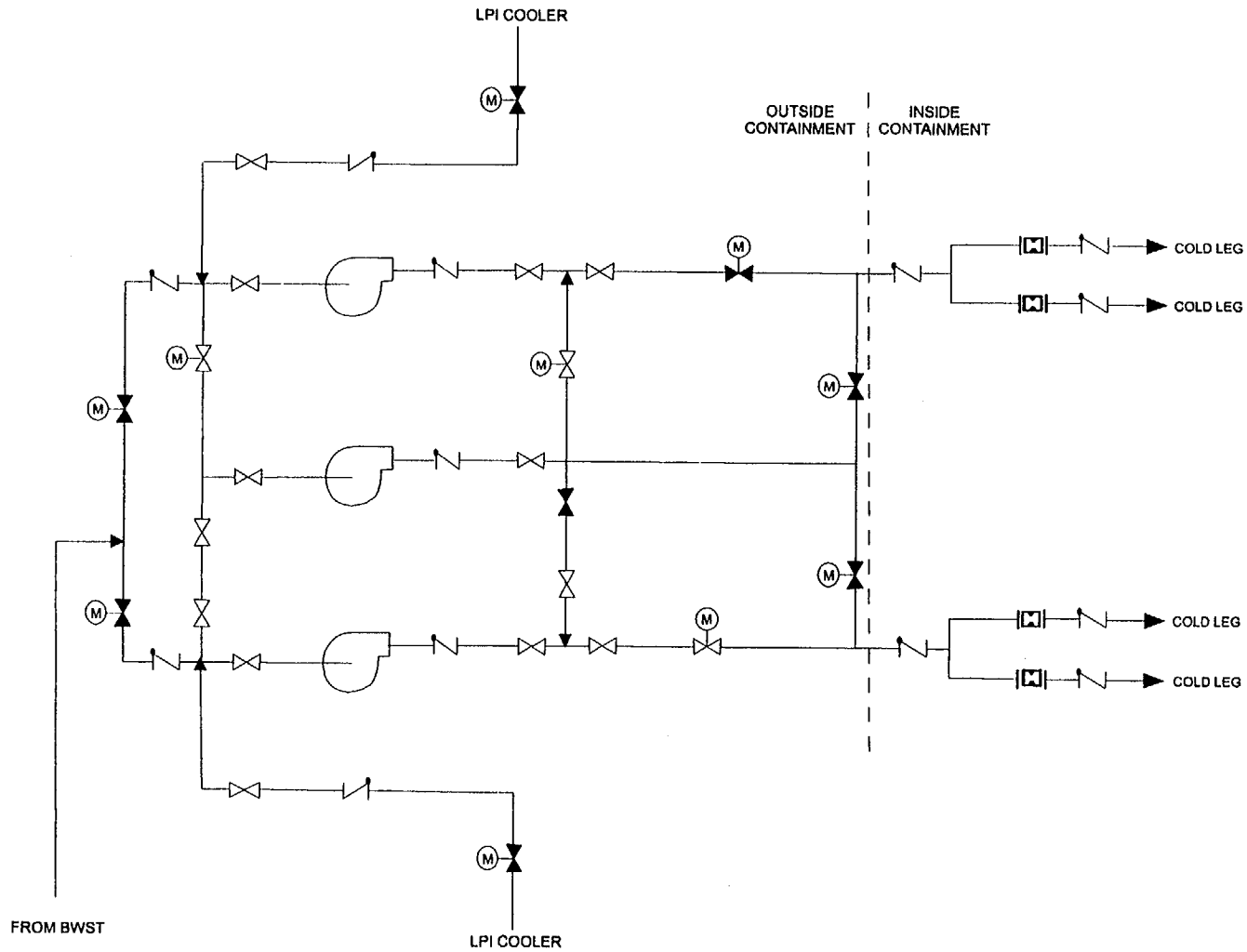

Figure 5.1
High Pressure Safety Injection System
(Example of Reporting Scope)

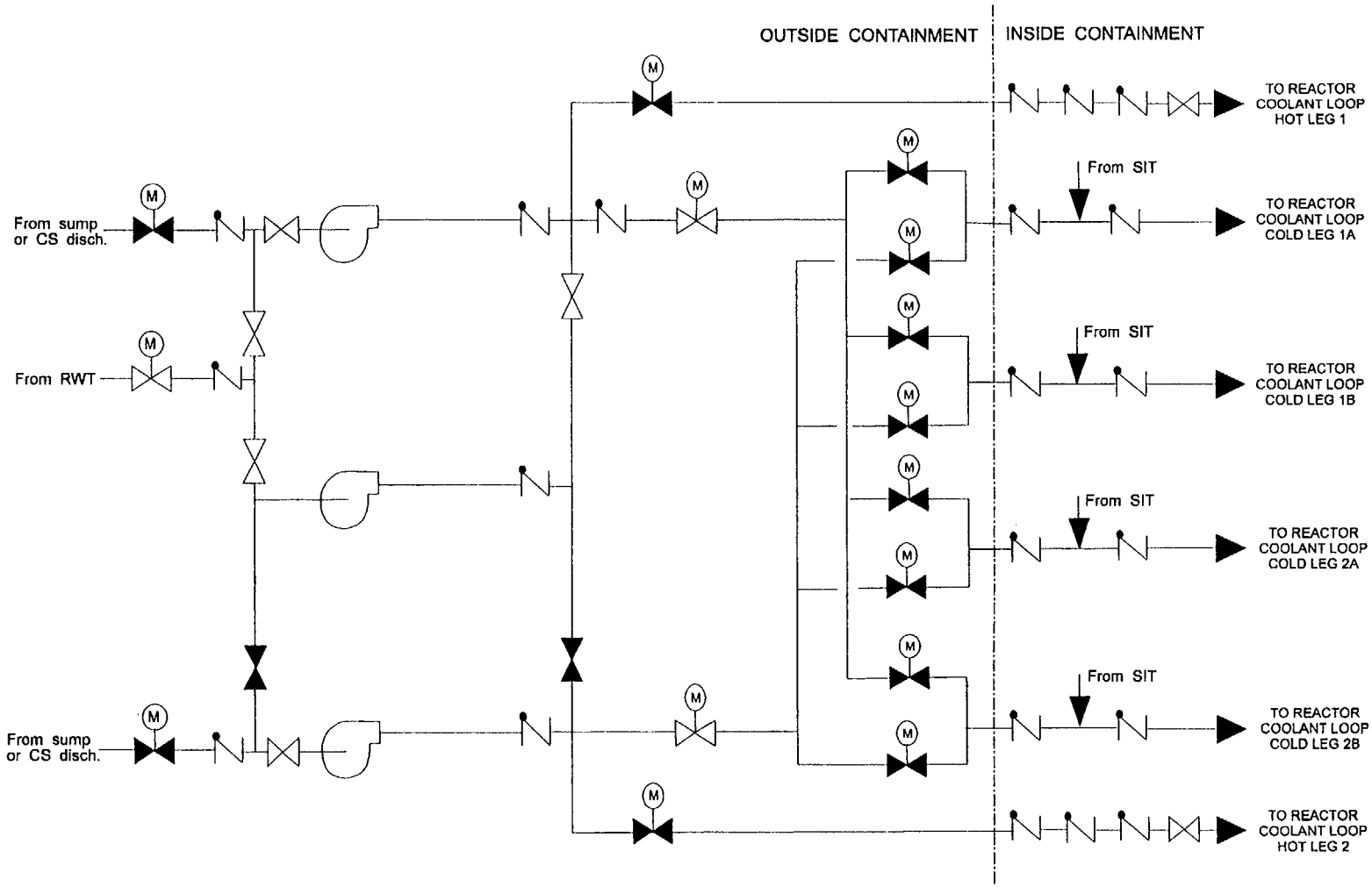

Figure 5.2
High Pressure Safety Injection System
(Example of Reporting Scope)

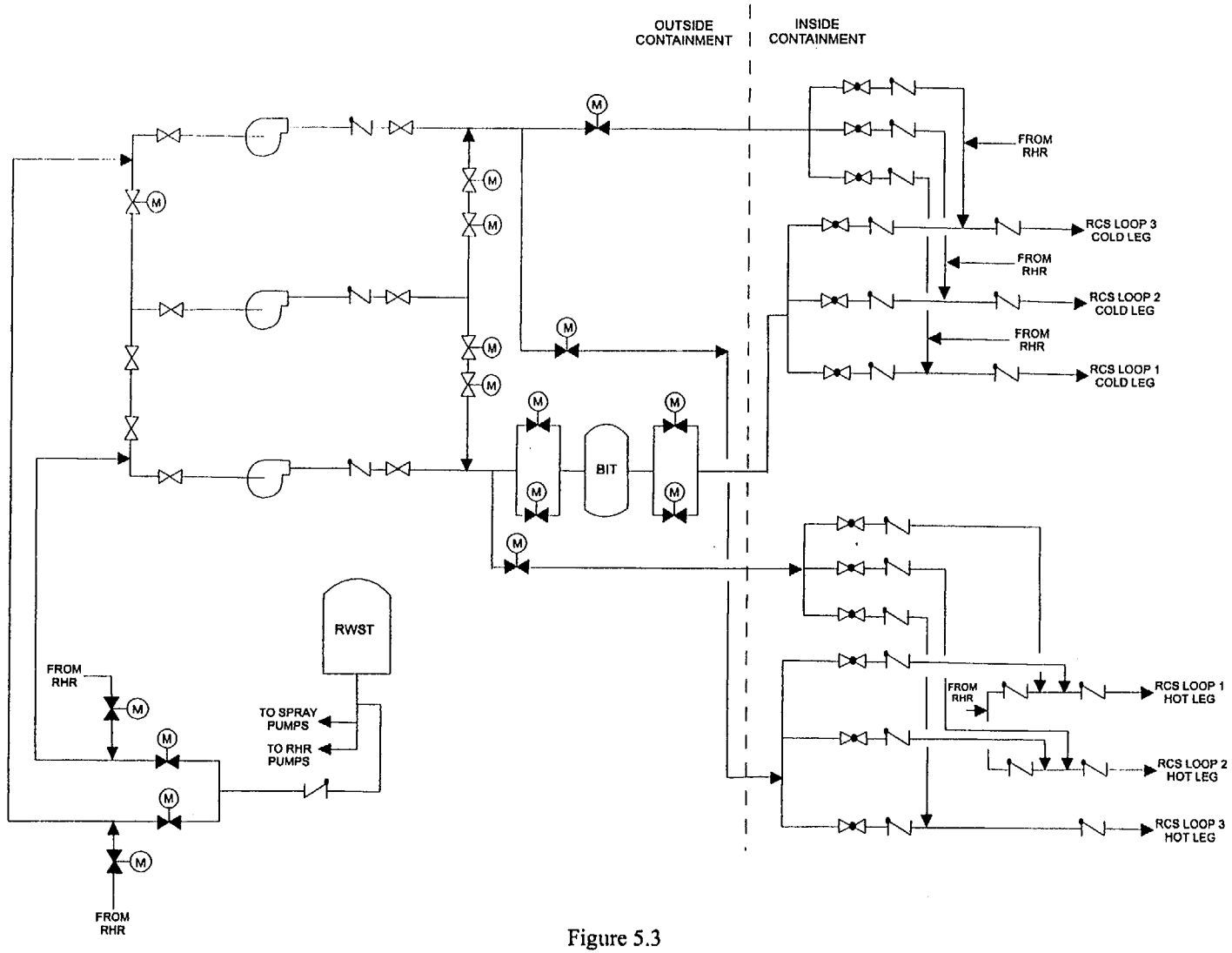

Figure 5.3
High Pressure Safety Injection System
(Example of Reporting Scope)

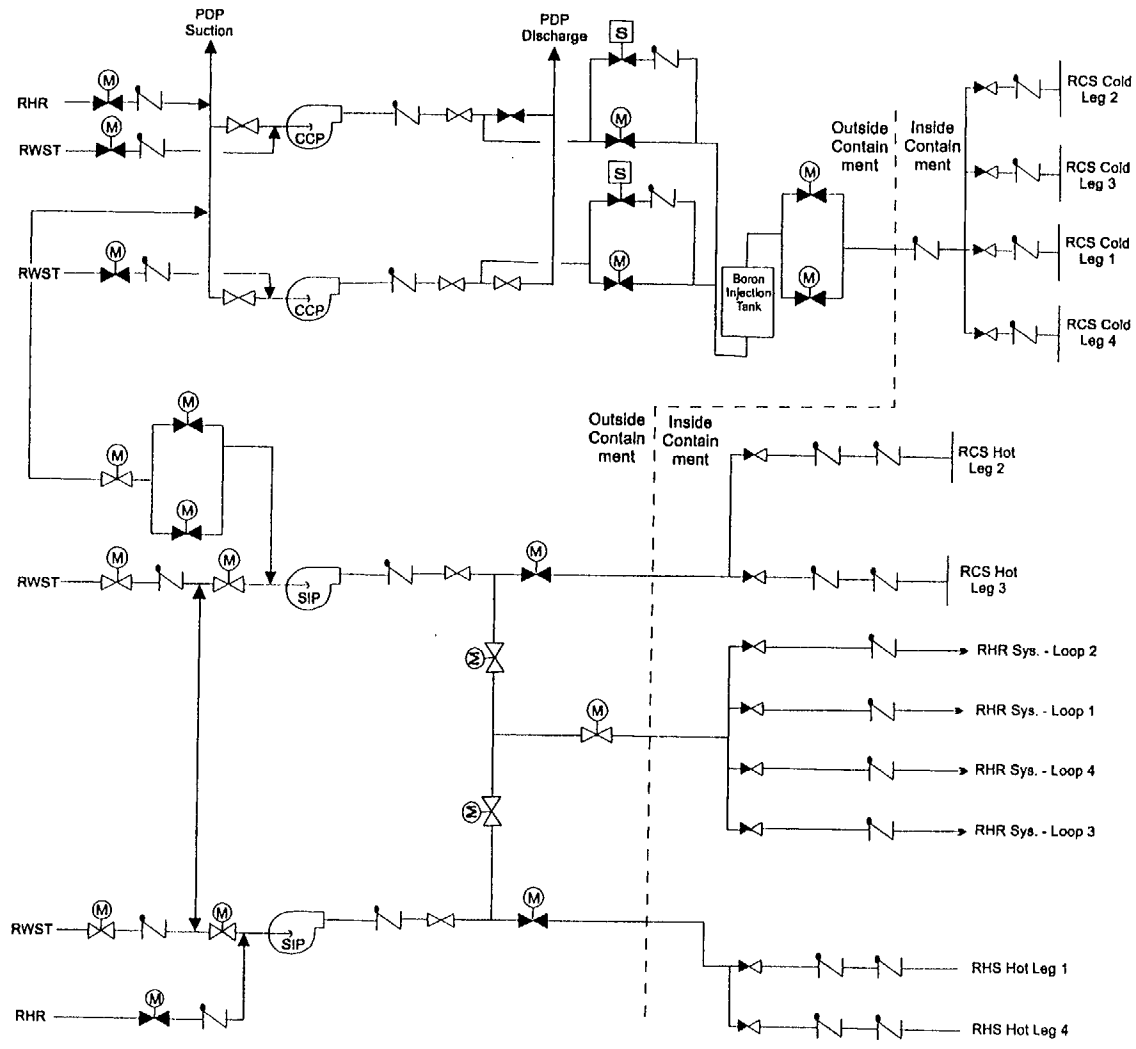

Figure 5.4
High Pressure Safety Injection System
(Example of Reporting Scope)

PWR Auxiliary Feedwater Systems

Definition and Scope

This section provides additional guidance for reporting the performance of PWR auxiliary feedwater (AFW) or emergency feedwater (EFW) systems. The AFW system provides decay heat removal via the steam generators to cool down and depressurize the reactor coolant system following a reactor trip. The AFW system is assumed to be required for an extended period of operation during which the initial supply of water from the condensate storage tank is depleted and water from an alternative water source (e.g., the service water system) is required. Therefore components in the flow paths from both of these water sources are included; however, the alternative water source (e.g., service water system) is not included.

The function monitored for the indicator is:

- the ability of the AFW system to take a suction from the primary water source (typically, the condensate storage tank) or from an emergency source (typically, a lake or river via the service water system) and inject into at least one steam generator at rated flow and pressure.

Some plants have a startup feedwater pump that requires a manual actuation. Startup feedwater pumps are not included in the scope of the AFW system for this indicator.

Figures 6.1 through 6.3 show some typical AFW system configurations, indicating the components for which train unavailability is monitored. Plant-specific design differences may require other components to be included.

Train Determination

The number of trains is determined primarily by the number of parallel pumps in the AFW system, not by the number of injection lines. For example, a system with three AFW pumps is defined as three-train system, whether it feeds two, three, or four injection lines, and regardless of the flow capacity of the pumps.

Figure 6.1 illustrates a three-pump, two-steam generator plant that features redundant flow paths to the steam generators. This system is a three-train system. (If the system had only one motor-driven pump, it would be a two-train system.) The turbine-driven pump train does not share motor-operated isolation valves with the motor-driven pump trains in this design.

Another three-pump, two-steam generator design is shown in Figure 6.2. This is also a three-train system; however, in this design, the isolation and regulating valves in the motor-driven pump trains are also included in the turbine-driven pump train.

A three-pump, four-steam generator design is shown in Figure 6.3. In this design, either motor-driven pump can supply each steam generator through a common header. The turbine-driven pump can supply each steam generator through a separate header. The turbine-driven and motor-

driven pump trains do not share the air-operated regulating valves in this design. This is a three train system. Three-steam generator designs may be arranged similar to Figure 6.3.

Clarifying Notes

Some AFW components, may be included in the scope of more than one train. For example, one set of flow regulating valves and isolation valves in a three-pump, two-steam generator system ~~(as in Figure 6.2)~~ are included in the motor-driven pump train with which they are electrically associated, but they are also included (along with the redundant set of valves) in the turbine-driven pump train. In these instances, the effects of testing or failure of the valves should be reported in both affected trains.

Similarly, when two trains provide flow to a common header, such as in Figure 6.3, the effect of isolation or flow regulating valve failures in paths connected to the header should be considered in both trains.

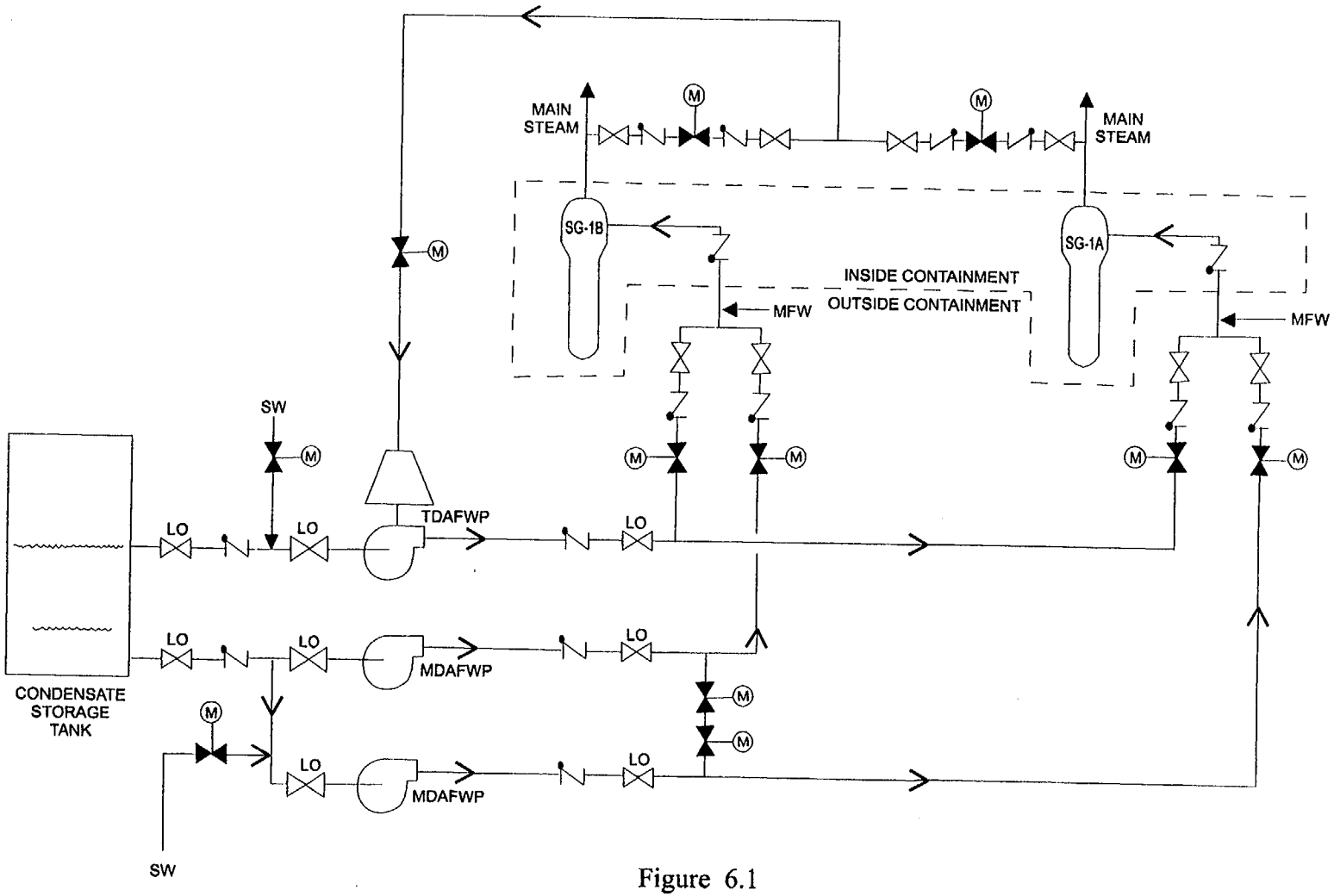

Figure 6.1
Auxiliary Feedwater System
(Example of Reporting Scope)

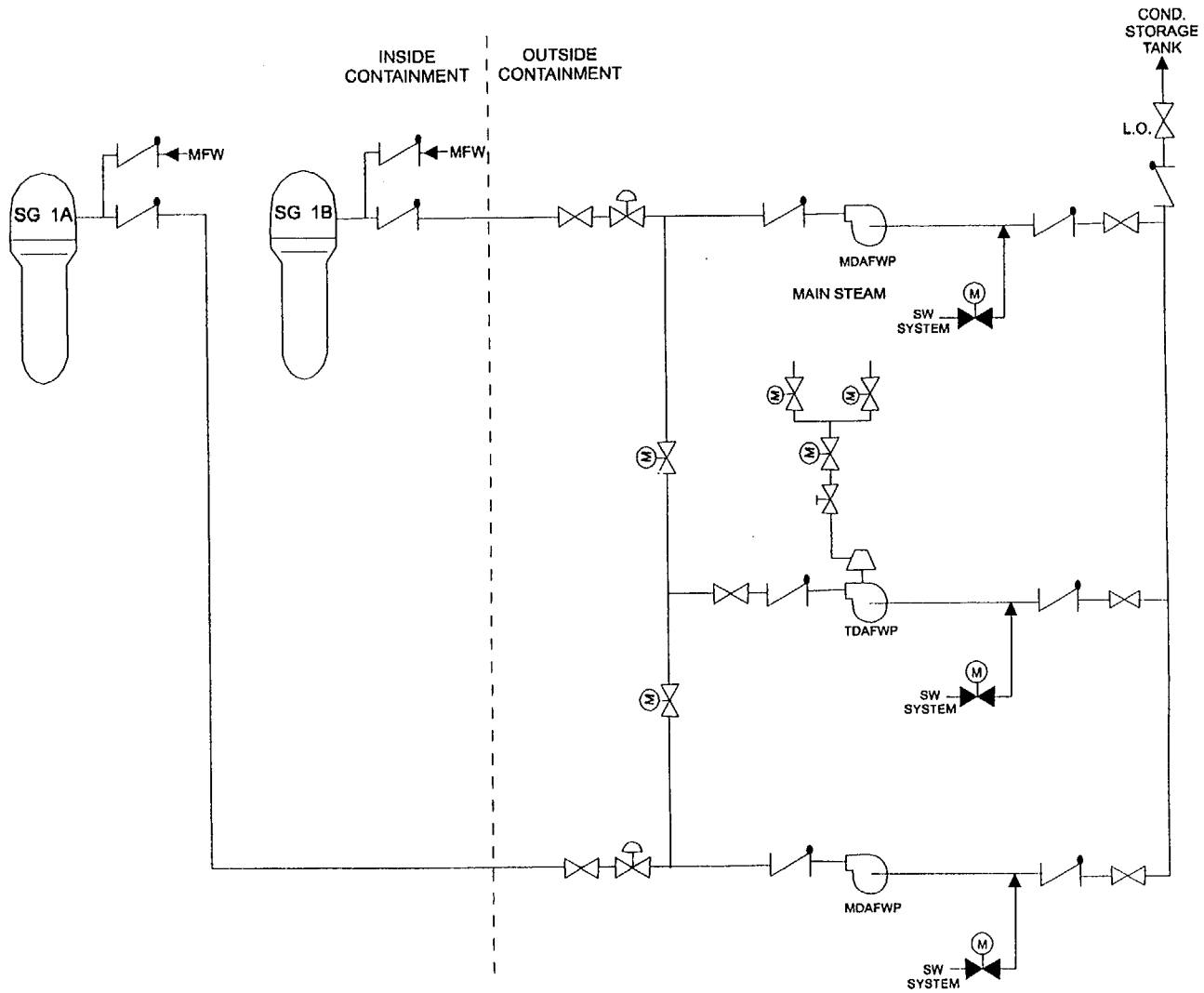

Figure 6.2
Auxiliary Feedwater System
(Example of Reporting Scope)

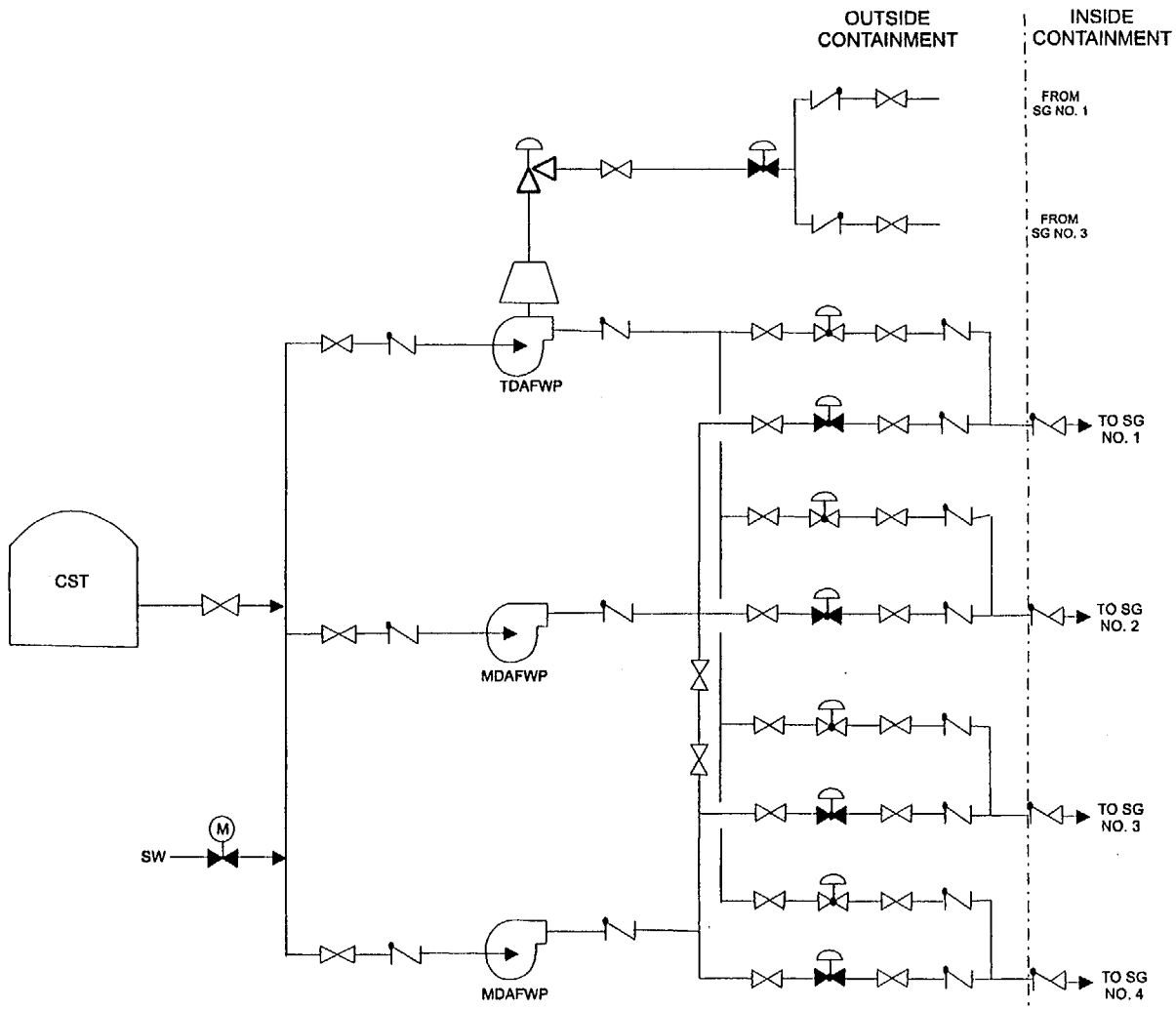

Figure 6.3
Auxiliary Feedwater System
(Example of Reporting Scope)

PWR Residual Heat Removal System

Definition and Scope

This section provides additional guidance for reporting the performance of the PWR residual heat removal (RHR) system for post-accident recirculation and shutdown cooling modes of operation. In the event of a loss of reactor coolant inventory, the post-accident recirculation mode is used to cool and recirculate water from the containment sump following depletion of RWST inventory. The shutdown cooling function is used to remove decay heat from the primary system following any transient requiring normal long-term heat removal from the reactor vessel.

The functions monitored for this indicator are:

- the ability of the RHR system to take a suction from the containment sump, cool the fluid, and inject at low pressure into the RCS, and

- the ability of the RHR system to remove decay heat from the reactor during a normal unit shutdown for refueling or maintenance.

Figures 7.1 and 7.2 show generic schematics with the RHR system in the recirculation and shutdown cooling modes, respectively. The figures indicate the components for which train unavailability is monitored. Plant-specific design differences may require other components to be included.

Train Determination

The number of trains in the RHR system is determined by the number of parallel RHR heat exchangers capable of performing post-accident heat removal or shutdown cooling. The following discussion demonstrates train determination for various generic system designs.

Figure 7.1 and 7.2 illustrate a common RHR system (for post-accident recirculation and shutdown cooling modes) which incorporates two pumps and two heat exchangers arranged so that each heat exchanger can be supplied by one pump. This is a two-train RHR system.

Clarifying Notes

Some components are used to provide more than one function of RHR. If a component cannot perform as designed, rendering its associated train incapable of meeting one or both of the monitored functions, then the train is considered to be failed. Unavailable hours (if the train was required to be available for service) would be reported as a result of the component failure.

Because RHR and HPSI are monitored as separate systems with each having its own performance indicator, there is no need to cascade RHR system unavailability into HPSI. RHR system unavailability includes the system upstream of the RHR system to HPSI system isolation valves. Unavailability of the isolation valves between the RHR system and the HPSI pump suction are only counted against the HPSI system.(FAQ 280)

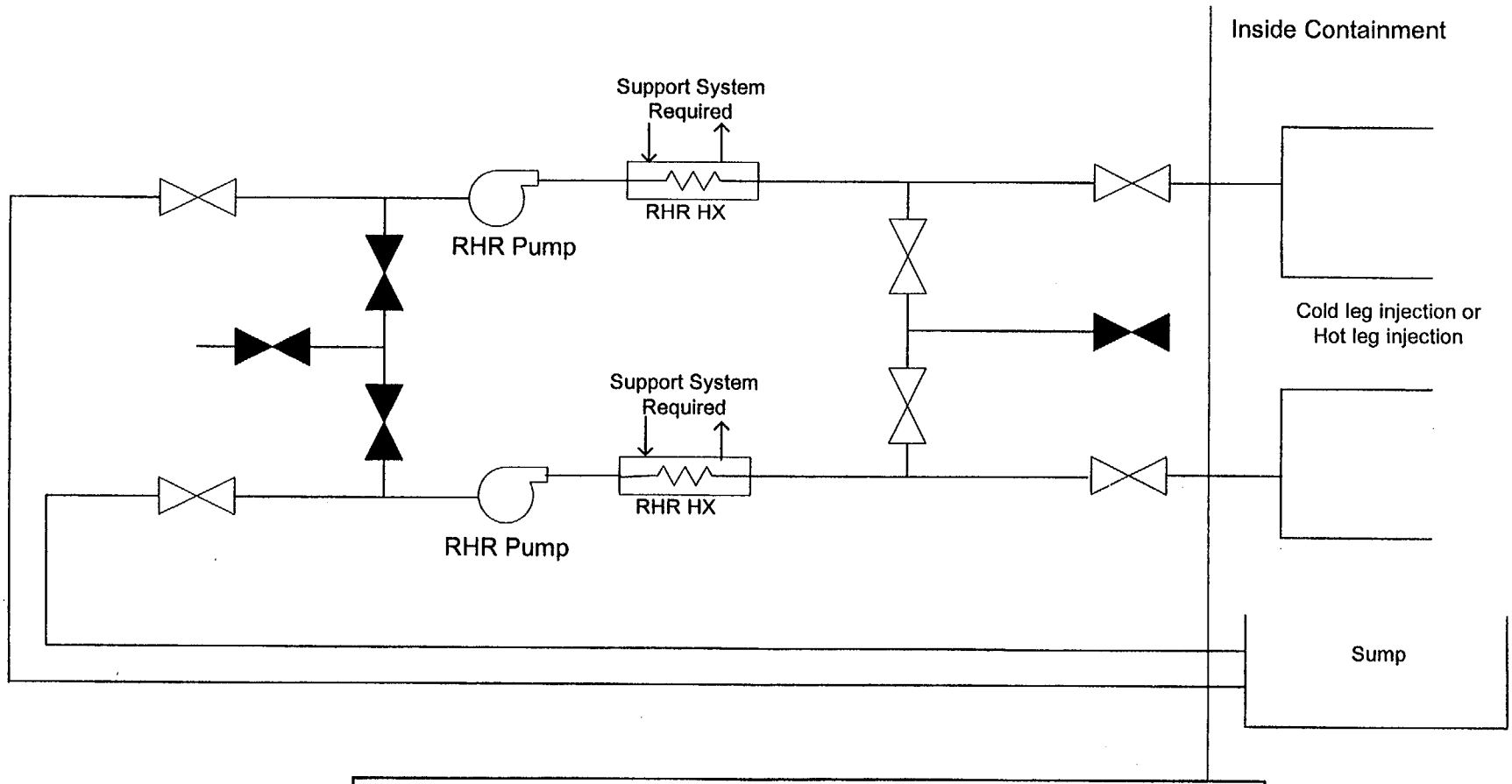

Figure 7.1 – Recirculation Mode – two trains (both source and injection)
Example of reporting Scope, PWR RHR System

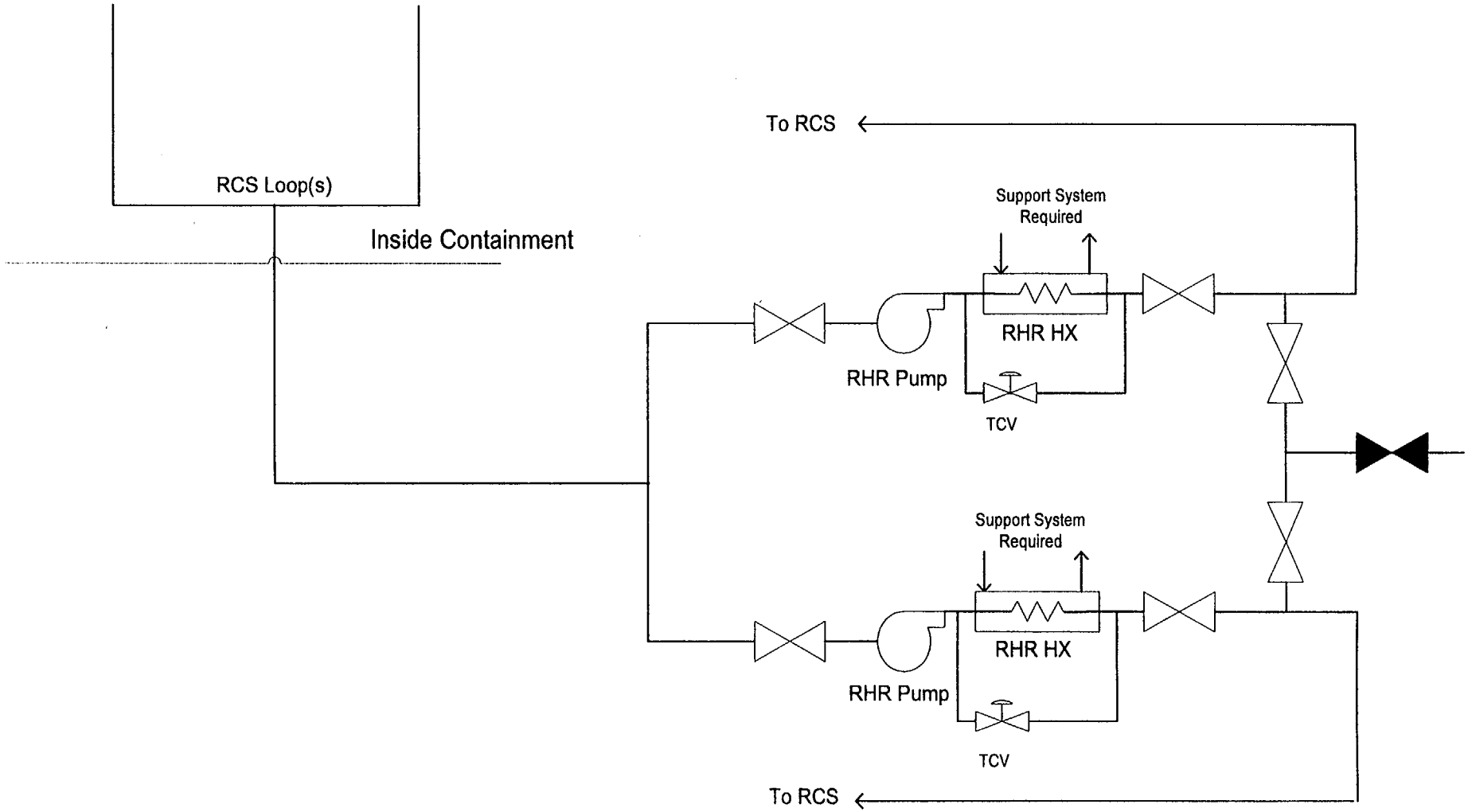

Figure 7.2 Shutdown Cooling Mode
(Example of Reporting Scope, PWR RHR System

SAFETY SYSTEM FUNCTIONAL FAILURES

Purpose

This indicator monitors events or conditions that prevented, or could have prevented, the fulfillment of the safety function of structures or systems that are needed to:

(a) Shut down the reactor and maintain it in a safe shutdown condition;
(b) Remove residual heat;
(c) Control the release of radioactive material; or
(d) Mitigate the consequences of an accident.

Indicator Definition

The number of events or conditions that prevented, or could have prevented, the fulfillment of the safety function of structures or systems in the previous four quarters.

Data Reporting Elements

The following data is reported for each reactor unit:

- the number of safety system functional failures during the previous quarter

Calculation

unit value = number of safety system functional failures in previous four quarters

Definition of Terms

Safety System Function Failure (SSFF) is any event or condition that could have prevented the fulfillment of the safety function of structures or systems that are needed to:

(A) Shut down the reactor and maintain it in a safe shutdown condition;
(B) Remove residual heat;
(C) Control the release of radioactive material; or
(D) Mitigate the consequences of an accident.

The indicator includes a wide variety of events or conditions, ranging from actual failures on demand to potential failures attributable to various causes, including environmental qualification, seismic qualification, human error, design or installation errors, etc. Many SSFFs do not involve actual failures of equipment.

Because the contribution to risk of the structures and systems included in the SSFF varies considerably, and because potential as well as actual failures are included, it is not possible to assign a risk-significance to this indicator. It is intended to be used as a possible precursor to more important equipment problems, until an indicator of safety system performance more directly related to risk can be developed.

Clarifying Notes

The definition of SSFFs is identical to the wording of the current revision to 10 CFR 50.73(a)(2)(v). Because of overlap among various reporting requirements in 10 CFR 50.73, some events or conditions that result in safety system functional failures may be properly reported in accordance with other paragraphs of 10 CFR 50.73, particularly paragraphs (a)(2)(i), (a)(2)(ii), and (a)(2)(vii). An event or condition that meets the requirements for reporting under another paragraph of 10 CFR 50.73 should be evaluated to determine if it also prevented the fulfillment of a safety function. Should this be the case, the requirements of paragraph (a)(2)(v) are also met and the event or condition should be included in the quarterly performance indicator report as an SSFF. The level of ~~judgement~~judgment for reporting an event or condition under paragraph (a)(2)(v) as an SSFF is a reasonable expectation of preventing the fulfillment of a safety function.

In the past, LERs may not have explicitly identified whether an event or condition was reportable under 10 CFR 50.73(a)(2)(v) (i.e., all pertinent boxes may not have been checked). It is important to ensure that the applicability of 10 CFR 50.73(a)(2)(v) has been explicitly considered for each LER considered for this performance indicator.

NUREG-1022: Unless otherwise specified in this guideline, guidance contained in the latest revision to NUREG-1022, "Event Reporting Guidelines, 10CFR 50.72 and 50.73," that is applicable to reporting under 10 CFR 50.73(a)(2)(v), should be used to assess reportability for this performance indicator.

Planned Evolution for maintenance or surveillance testing: NUREG-1022, Revision 2, page 56 states, "The following types of events or conditions generally are not reportable under these criteria:...Removal of a system or part of a system from service as part of a planned evolution for maintenance or surveillance testing..."

The word "planned" is defined as follows:

> "Planned" means the activity is undertaken voluntarily, at the licensee's discretion, and is not required to restore operability or for continued plant operation.

A single event or condition that affects several systems: counts as only one failure.

Multiple occurrences of a system failure: the number of failures to be counted depends upon whether the system was declared operable between occurrences. If the licensee knew that the problem existed, tried to correct it, and considered the system to be operable, but the system was subsequently found to have been inoperable the entire time, multiple failures will be counted whether or not they are reported in the same LER. But if the licensee knew that a potential problem existed and declared the system inoperable, subsequent failures of the system for the same problem would not be counted as long as the system was not declared operable in the interim. Similarly, in situations where the licensee did not realize that a problem existed (and thus could not have intentionally declared the system inoperable or corrected the problem), only one failure is counted.

Additional failures: a failure leading to an evaluation in which additional failures are found is only counted as one failure; new problems found during the evaluation are not counted, even if

the causes or failure modes are different. The intent is to not count additional events when problems are discovered while resolving the original problem.

Engineering analyses: events in which the licensee declared a system inoperable but an engineering analysis later determined that the system was capable of performing its safety function are not counted, even if the system was removed from service to perform the analysis.

Reporting date: the date of the SSFF is the Report Date of the LER.

Data Examples

Safety System Functional Failures

Quarter	2Q/98	3Q/98	4Q/98	1Q/98	2Q/98	3Q/98	4Q/98	Prev. Q
SSFF in the previous qtr	1	3	2	1	1	2	0	1
					2Q/98	3Q/98	4Q/98	Prev. Q
Indicator: Number of SSFs over 4 Qtrs					7	6	4	4

Threshold for PWRs	
Green	≤5
White	>5
Yellow	N/A
Red	N/A

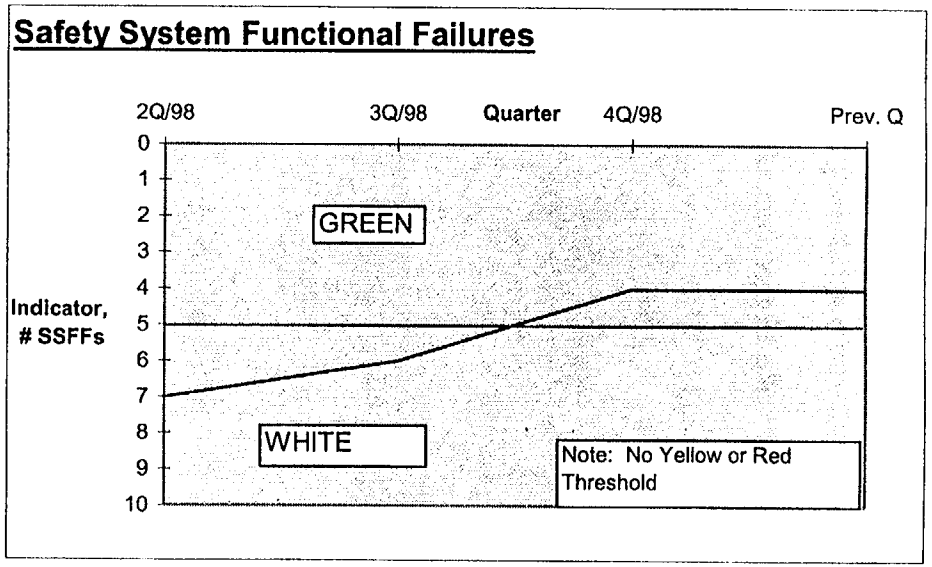

2.3 BARRIER INTEGRITY CORNERSTONE

The purpose of this cornerstone is to provide reasonable assurance that the physical design barriers (fuel cladding, reactor coolant system, and containment) protect the public from radionuclide releases caused by accidents or events. These barriers are an important element in meeting the NRC mission of assuring adequate protection of public health and safety. The performance indicators assist in monitoring the functionality of the fuel cladding and the reactor coolant system. There is currently no performance indicator for the containment barrier. The performance of this barrier is assured through the inspection program.

There are two performance indicators for this cornerstone:

- Reactor Coolant System (RCS) Specific Activity
- RCS Identified Leak Rate

REACTOR COOLANT SYSTEM (RCS) SPECIFIC ACTIVITY

Purpose

This indicator monitors the integrity of the fuel cladding, the first of the three barriers to prevent the release of fission products. It measures the radioactivity in the RCS as an indication of functionality of the cladding.

Indicator Definition

The maximum monthly RCS activity in micro-Curies per gram (μCi/gm) dose equivalent Iodine-131 per the technical specifications, and expressed as a percentage of the technical specification limit. Those plants whose technical specifications are based on micro-curies per gram (μCi/gm total Iodine should use that measurement.

Data Reporting Elements

The following data are reported for each reactor unit:

- maximum calculated RCS activity for each unit, in micro-Curies per gram dose equivalent Iodine-131, as required by technical specifications at steady state power, for each month during the previous quarter (three values are reported).

- Technical Specification limit

Calculation

The indicator is calculated as follows:

$$\text{unit value} = \frac{\text{the maximum monthly value of calculated activity}}{\text{Technical Specification limit}} \times 100$$

Definitions of Terms

(Blank)

Clarifying Notes

This indicator is recorded monthly and reported quarterly.

The indicator is calculated using the same methodology, assumptions and conditions as for the Technical Specification calculation. If more than one method can be used to meet Technical Specifications, use the results of the method that was used at the time to satisfy the Technical Specifications. (FAQ 288)

Unless otherwise defined by the licensee, steady state is defined as continuous operation for at least three days at a power level that does not vary more than ±5 percent.

This indicator monitors the steady state integrity of the fuel-cladding barrier at power. Transient spikes in RCS Specific Activity following power changes, shutdowns and scrams may not provide a reliable indication of cladding integrity and should not be included in the monthly maximum for this indicator.

Samples taken using technical specification methodology when shutdown are not reported. However, samples taken using the technical specification methodology at steady state power more frequently than required are to be reported.If in the entire month, plant conditions do not require RCS activity to be calculated, the quarterly report is noted as N/A for that month. (A value of N/A is reported).

Licensees should use the most restrictive regulatory limit (e.g., technical specifications (TS) or license condition). However, if the most restrictive regulatory limit is insufficient to assure plant safety, then NRC Administrative Letter 98-10 applies, which states that imposition of administrative controls is an acceptable short-term corrective action. When an administrative control is in place as temporary measure to ensure that TS limits are met and to ensure public health and safety (i.e., to ensure 10 CFR Part 100) (FAQ 262), that administrative limit should be used for this PI.

dose limits are not exceeded

Data Examples

Reactor Coolant System Activity (RCSA)

	4/98	5/98	6/98	7/98	8/98	9/98	10/98	11/98	12/98	1/99	2/99	Prev. mth
Indicator, % of T.S. Limit	10	20	5	4	0.5	2	20	50	60	40	30	10
Max Activity µCi/gm I-131 Equivale	0.1	0.2	0.05	0.04	0.005	0.02	0.2	0.5	0.6	0.4	0.3	0.1
T.S Limit	1	1	1	1	1	1	1	1	1	1	1	1
Thresholds	Green	≤ 50% T.S. limit										
	White	> 50% T.S limit										
	Yellow	>100% T.S. limit										

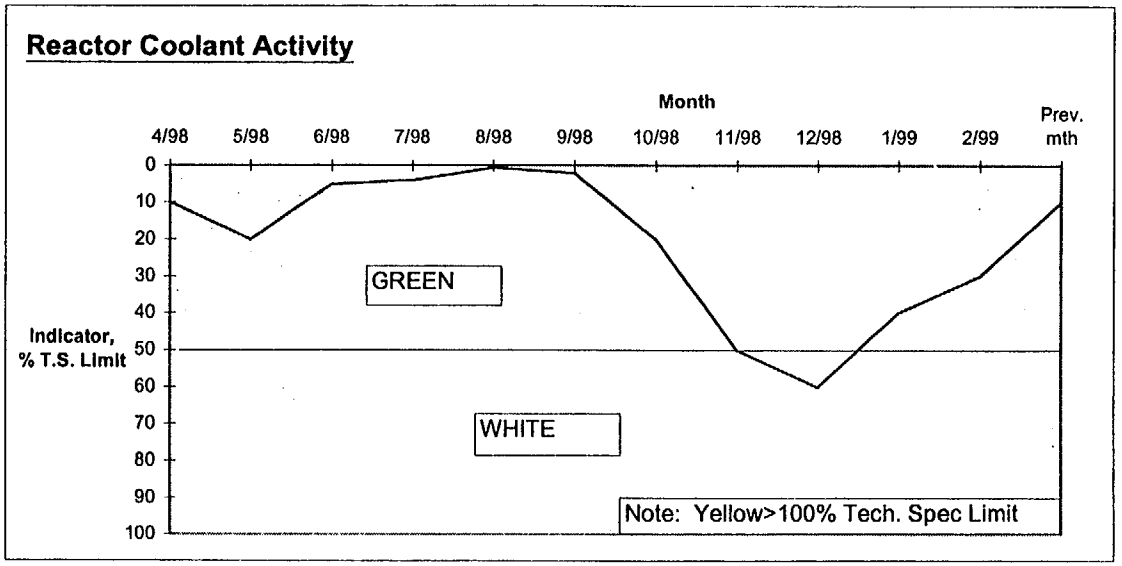

REACTOR COOLANT SYSTEM LEAKAGE

Purpose

This indicator monitors the integrity of the RCS pressure boundary, the second of the three barriers to prevent the release of fission products. It measures RCS Identified Leakage as a percentage of the technical specification allowable Identified Leakage to provide an indication of RCS integrity.

Indicator Definition

The maximum RCS Identified Leakage in gallons per minute each month per the technical specifications and expressed as a percentage of the technical specification limit.

Data Reporting Elements

The following data are required to be reported each quarter:

- The maximum RCS Identified Leakage calculation for each month of the previous quarter (three values).
- Technical Specification limit

Calculation

The unit value for this indicator is calculated as follows:

$$\text{unit value} = \frac{\text{the maximum monthly value of identified leakage}}{\text{Technical Specification limiting value}} \times 100$$

Definition of Terms

RCS Identified Leakage as defined in Technical Specifications.

Clarifying Notes

This indicator is recorded monthly and reported quarterly.

Normal steam generator tube leakage is included in the unit value calculation if required by the plant's Technical Specification definition of RCS identified leakage.

For those plants that do not have a Technical Specification limit on Identified Leakage, substitute RCS Total Leakage in the Data Reporting Elements.

Only calculations of RCS leakage that are computed in accordance with the calculational methodology requirements of the Technical Specifications are counted in this indicator. If in the entire month, plant conditions do not require RCS leakage to be calculated, the quarterly report is noted as N/A for that month. (A value of N/A is reported).

Data Examples

Reactor Coolant System Identified Leakage (RCSL)

	4/98	5/98	6/98	7/98	8/98	9/98	10/98	11/98	12/98	1/99	2/99	Prev. mth
Indicator %T.S. Value	60	40	10	70	50	60	40	30	30	20	20	20
Identified Leakage (gpm)	6	4	1	7	5	6	4	3	3	2	2	2
TS Value (gpm)	10	10	10	10	10	10	10	10	10	10	10	10
Threshold												
Green	≤50% TS limit											
White	>50% TS limit											
Yellow	>100%TS limit											
Data collected monthly, reported quarterly												

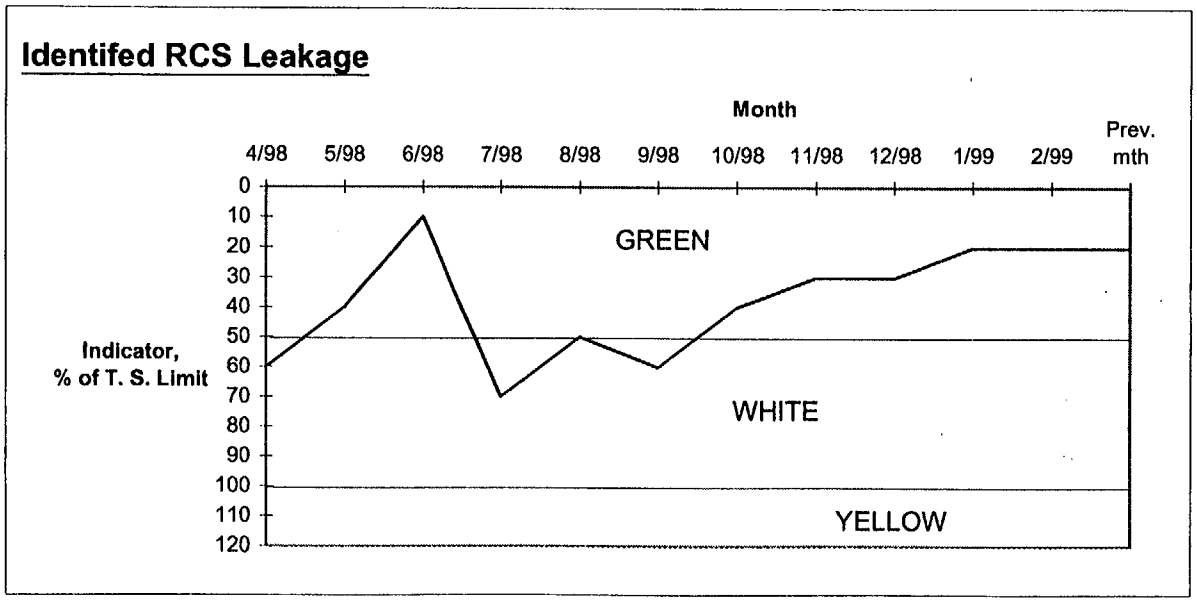

[This page intentionally left blank.]

2.4 EMERGENCY PREPAREDNESS CORNERSTONE

The objective of this cornerstone is to ensure that the licensee is capable of implementing adequate measures to protect the public health and safety during a radiological emergency. Licensees maintain this capability through Emergency Response Organization (ERO) participation in drills, exercises, actual events, training, and subsequent problem identification and resolution. The Emergency Preparedness performance indicators provide a quantitative indication of the licensee's ability to implement adequate measures to protect the public health and safety. These performance indicators create a licensee response band that allows NRC oversight of Emergency Preparedness programs through a baseline inspection program. These performance indicators measure onsite Emergency Preparedness programs. Offsite programs are evaluated by FEMA.

The protection of public health and safety is assured by a defense in depth philosophy that relies on: safe reactor design and operation, the operation of mitigation features and systems, a multi-layered barrier system to prevent fission product release, and emergency preparedness.

The Emergency Preparedness cornerstone performance indicators are:

- Drill/Exercise performance (DEP),
- Emergency Response Organization Drill Participation (ERO),
- Alert and Notification System Reliability (ANS)

DRILL/EXERCISE PERFORMANCE

Purpose

This indicator monitors timely and accurate licensee performance in drills and exercises when presented with opportunities for classification of emergencies, notification of offsite authorities, and development of protective action recommendations (PARs). It is the ratio, in percent, of timely and accurate performance of those actions to total opportunities.

Indicator Definition

The percentage of all drill, exercise, and actual opportunities that were performed timely and accurately during the previous eight quarters.

Data Reporting Elements

The following data are required to calculate this indicator:

- the number of drill, exercise, and actual event opportunities during the previous quarter.
- the number of drill, exercise, and actual event opportunities performed timely and accurately during the previous quarter.

The indicator is calculated and reported quarterly. (See clarifying notes)

Calculation

The site average values for this indicator are calculated as follows:

$$\left[\frac{\text{\# of timely \& accurate classifications, notifications, \& PARs from DE \& AEs * during the previous 8 quarters}}{\text{The total opportunities to perform classifications, notifications \& PARs during the previous 8 quarters}}\right] \times 100$$

*DE & AEs = Drills, Exercises, and Actual Events

Definition of Terms

Opportunities should include multiple events during a single drill or exercise (if supported by the scenario) or actual event, as follows:

- each expected classification or upgrade in classification
- each initial notification of an emergency class declaration
- each initial notification of PARs or change to PARs
- each PAR developed

Timely means:

- classifications are made consistent with the goal of 15 minutes once available plant parameters reach an Emergency Action Level (EAL)
- PARs are made consistent with the goal of 15 minutes once data is available.
- offsite notifications are initiated within 15 minutes of event classification and/or PAR development (see clarifying notes)

Accurate means:

- Classification and PAR appropriate to the event as specified by the approved plan and implementing procedures (see clarifying notes)
- Initial notification form completed appropriate to the event to include (see clarifying notes):
  - Class of emergency
  - EAL number
  - Description of emergency
  - Wind direction and speed
  - Whether offsite protective measures are necessary
  - Potentially affected population and areas
  - Whether a release is taking place
  - Date and time of declaration of emergency
  - Whether the event is a drill or actual event
  - Plant and/or unit as applicable

Clarifying Notes

While actual event opportunities are included in the performance indicator data , the NRC will also inspect licensee response to all actual events.

As a minimum, actual emergency declarations and evaluated exercises are to be included in this indicator. In addition, other simulated emergency events that the licensee formally assesses for performance of classification, notification or PAR development may be included in this indicator (opportunities cannot be removed from the indicator due to poor performance).

The following information provides additional clarification of the accuracy requirements described above:

- It is understood that initial notification forms are negotiated with offsite authorities. If the approved form does not include these elements, they need not be added. Alternately, if the form includes elements in addition to these, those elements need not be assessed for accuracy when determining the DEP PI. It is, however, expected that errors in such additional elements would be critiqued and addressed through the corrective action system.

- The description of the event causing the classification may be brief and need not include all plant conditions. At some sites, the EAL number is the description.

- "Release" means a radiological release attributable to the emergency event.

- Minor discrepancies in the windspeed and direction provided on the emergency notification form need not count as a missed notification opportunity provided the discrepancy would not result in an incorrect PAR being provided.

The licensee shall identify, in advance, drills, exercises and other performance enhancing experiences in which opportunities will be formally assessed, and shall be available for NRC review. The licensee has the latitude to include opportunities in the PI statistics as long as the

drill (in whatever form) simulates the appropriate level of inter-facility interaction. The criteria for suitable drills/performance enhancing experiences are provided under the ERO Drill Participation PI clarifying notes.

Performance statistics from operating shift simulator training evaluations may be included in this indicator only when the scope requires classification. Classification, PAR notifications and PARs may be included in this indicator if they are performed to the point of filling out the appropriate forms and demonstrating sufficient knowledge to perform the actual notification. However, there is no intent to disrupt ongoing operator qualification programs. Appropriate operator training evolutions should be included in the indicator only when Emergency Preparedness aspects are consistent with training goals.

Some licensees have specific arrangements with their State authorities that provide for different notification requirements than those prescribed by the performance indicator, e.g., within one hour, not 15 minutes. In these instances the licensee should determine success against the specific state requirements.

For sites with multiple agencies to notify, the notification is considered to be initiated when contact is made with the first agency to transmit the initial notification information.

Simulation of notification to offsite agencies is allowed. It is not expected that State/local agencies be available to support all drills conducted by licensees. The drill should reasonably simulate the contact and the participants should demonstrate their ability to use the equipment.

Classification is expected to be made promptly following indication that the conditions have reached an emergency threshold in accordance with the licensee's EAL scheme. With respect to classification of emergencies, the 15 minute goal is a reasonable period of time for assessing and classifying an emergency once indications are available to control room operators that an EAL has been exceeded. Allowing a delay in classifying an emergency up to 15 minutes will have minimal impact upon the overall emergency response to protect the public health and safety. The 15-minute goal should not be interpreted as providing a grace period in which a licensee may attempt to restore plant conditions and avoid classifying the emergency.

If an event has occurred that resulted in an emergency classification where no EAL was exceeded, the incorrect classification should be considered a missed opportunity. The subsequent notification should be considered an opportunity and evaluated on its own merits.

During drill performance, the ERO may not always classify an event exactly the way that the scenario specifies. This could be due to conservative decision making, Emergency Director judgment call, or a simulator driven scenario that has the potential for multiple 'forks'. Situations can arise in which assessment of classification opportunities is subjective due to deviation from the expected scenario path. In such cases, evaluators should document the rationale supporting their decision for eventual NRC inspection. Evaluators must determine if the classification was appropriate to the event as presented to the participants and in accordance with the approved emergency plan and implementing procedures.

If the expected classification level is missed because an EAL is not recognized within 15 minutes of availability, but a subsequent EAL for the same classification level is subsequently recognized, the subsequent classification is not an opportunity for DEP statistics. The reason

that the classification is not an opportunity is that the appropriate classification level was not attained in a timely manner.

Failure to appropriately classify an event counts as only one failure: This is because notification of the classification, development of any PARs and PAR notification are subsequent actions to classification.

The notification associated with a PAR is counted separately: e. g., an event triggering a GE classification would represent a total of 4 opportunities: 1 for classification of the GE, 1 for notification of the GE to the State and/or local government authorities, 1 for development of a PAR and 1 for notification of the PAR.

If PARs at the SAE are in the site Emergency Plan they could be counted as opportunities. However, this would only be appropriate where assessment and decision making is involved in development of the PAR. Automatic PARs with little or no assessment required would not be an appropriate contributor to the PI. PARs limited to livestock or crops and no PAR necessary decisions are also not appropriate.

Dose assessment and PAR development are expected to be made promptly following indications that the conditions have reached a threshold in accordance with the licensee's PAR scheme. The 15 minute goal from data availability is a reasonable period of time to develop or expand a PAR. Plant conditions, meteorological data, field monitoring data, and/or radiation monitor data should provide sufficient information to determine the need to change PARs. If radiation monitor readings provide sufficient data for assessments, it is not appropriate to wait for field monitoring to become available to confirm the need to expand the PAR. The 15 minute goal should not be interpreted as providing a grace period in which the licensee may attempt to restore conditions and avoid making the PAR recommendation.

If a licensee discovers after the fact (greater than 15 minutes) that an event or condition had existed which exceeded an EAL, but no emergency had been declared and the EAL is no longer exceeded at the time of discovery, the following applies:

- If the indication of the event was not available to the operator, the event should not be evaluated for PI purposes.
- If the indication of the event was available to the operator but not recognized, it should be considered an unsuccessful classification opportunity.
- In either case described above, notification should be performed in accordance with NUREG-1022 and not be evaluated as a notification opportunity.

1 **Data Example**

Emergency Response Organization
Drill/Exercise Performance

	3Q/96	4Q/96	1Q/97	2Q/97	3Q/97	4Q/97	1Q/98	2Q/98	3Q/98	4Q/98
Successful Classifications, Notifications & PARs over qtr	0	0	11	11	0	8	10	0	23	11
Opportunities to Perform Classifications, Notifications, & PARs in qtr	0	0	12	12	0	12	12	0	24	12
Total # of succesful Classifications, Notifications, & PARs in 8 qtrs								**40**	**63**	**74**
Total # of opportunities to perform Classification, Notifications & PARs in 8 qtrs								**48**	**72**	**84**
								2Q/98	**3Q/98**	**4Q/98**
Indicator expressed as a percentage of Opportunities to perform,								83.3%	87.5%	88.1%
Classifications, Communications & PARs										

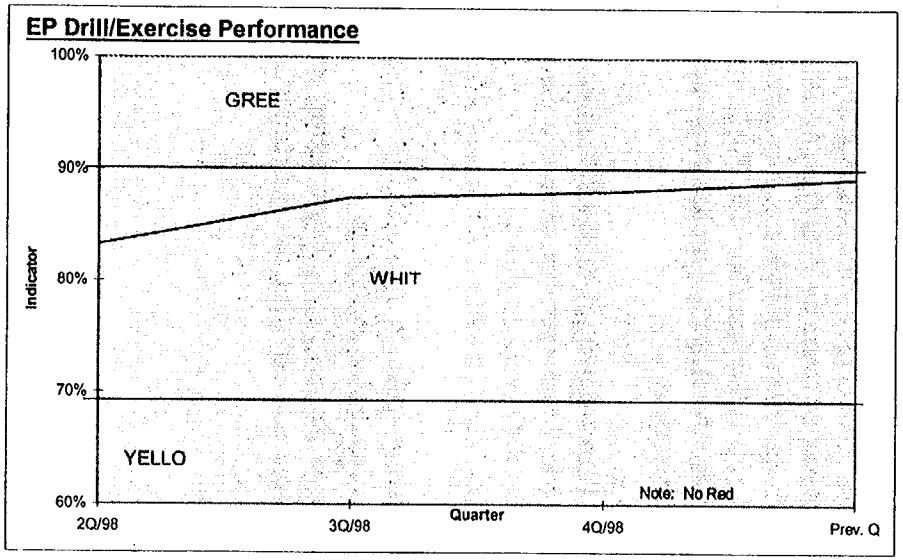

2

EMERGENCY RESPONSE ORGANIZATION DRILL PARTICIPATION

Purpose

This indicator tracks the participation of key members of the Emergency Response Organization in performance enhancing experiences, and through linkage to the DEP indicator ensures that the risk significant aspects of classification, notification, and PAR development are evaluated and included in the PI process. This indicator measures the percentage of key ERO members who have participated recently in performance-enhancing experiences such as drills, exercises, or in an actual event.

Indicator Definition

The percentage of key ERO members that have participated in a drill, exercise, or actual event during the previous eight quarters, **as measured on the last calendar day of the quarter.**

Data Reporting Elements

The following data are required to calculate this indicator and are reported:

- total number of key ERO members
- total key ERO members that have participated in a drill, exercise, or actual event in the previous eight quarters

The indicator is calculated and reported quarterly, based on participation over the previous eight quarters (see clarifying notes)

Calculation

The site indicator is calculated as follows:

$$\frac{\text{\# of Key ERO Members that have participated in a drill, exercise or actual event during the previous 8 qrts}}{\text{Total number of Key ERO Members}} \times 100$$

Definition of Terms

Key ERO members are those who fulfill the following functions:

- Control Room
  - Shift Manager (Emergency Director) - Supervision of reactor operations, responsible for classification, notification, and determination of protective action recommendations
  - Shift Communicator - provides initial offsite (state/local) notification

- Technical Support Center

    - Senior Manager - Management of plant operations/corporate resources
    - Key Operations Support
    - Key Radiological Controls - Radiological effluent and environs monitoring, assessment, and dose projections
    - Key TSC Communicator- provides offsite (state/local) notification
    - Key Technical Support

- Emergency Operations Facility

    - Senior Manager - Management of corporate resources
    - Key Protective Measures - Radiological effluent and environs monitoring, assessment, and dose projections
    - Key EOF Communicator- provides offsite (state/local) notification

- Operational Support Center

    - Key OSC Operations Manager

Clarifying Notes

When the functions of key ERO members include classification, notification, or PAR development opportunities, the success rate of these opportunities must contribute to Drill/Exercise Performance (DEP) statistics for participation of those key ERO members to contribute to ERO Drill Participation.

The licensee may designate drills as not contributing to DEP and, if the drill provides a performance enhancing experience as described herein, those key ERO members whose functions do not involve classification, notification or PARs may be given credit for ERO Drill Participation. Additionally, the licensee may designate elements of the drills not contributing to DEP (e.g., classifications will not contribute but notifications will contribute to DEP.) In this case, the participation of all key ERO members, except those associated with the non-contributing elements, may contribute to ERO Drill Participation. The licensee must document such designations in advance of drill performance and make these records available for NRC inspection.

Evaluated simulator training evolutions that contribute to Drill/Exercise Performance indicator statistics may be considered as opportunities for key ERO member participation and may be used for this indicator. The scenarios must at least contain a formally assessed classification and the results must be included in DEP statistics. However, there is no intent to disrupt ongoing operator qualification programs. Appropriate operator training evolutions should be included in this indicator only when Emergency Preparedness aspects are consistent with training goals.

If a key ERO member or operating crew member has participated in more than one drill during the eight quarter evaluation period, the most recent participation should be used in the Indicator statistics.

If a change occurs in the number of key ERO members, this change should be reflected in both the numerator and denominator of the indicator calculation.

If a person is assigned to more than one key position, it is expected that the person be counted in the denominator for each position and in the numerator only for drill participation that addresses each position. Where the skill set is similar, a single drill might be counted as participation in both positions.

When a key ERO member changes from one key ERO position to a different key ERO position with a skill set similar to the old one, the last drill/exercise participation may count. If the skill set for the new position is significantly different from the old position then the previous participation would not count.

Participation may be as a participant, mentor, coach, evaluator, or controller, but not as an observer. Multiple assignees to a given key ERO position could take credit for the same drill if their participation is a meaningful opportunity to gain proficiency in the assigned position.

The meaning of "drills" in this usage is intended to include performance enhancing experiences (exercises, functional drills, simulator drills, table top drills, mini drills, etc.) that reasonably simulate the interactions between appropriate centers and/or individuals that would be expected to occur during emergencies. For example, control room interaction with offsite agencies could be simulated by instructors or OSC interaction could be simulated by a control cell simulating the TSC functions, and damage control teams.

In general, a drill does not have to include all ERO facilities to be counted in this indicator. A drill is of adequate scope if it reasonably simulates the interaction between one or more of the following facilities, as would be expected to occur during emergencies:

- the control room,
- the Technical Support Center (TSC),
- the Operations Support Center,
- the Emergency Operations Facility (EOF),
- field monitoring teams,
- damage control teams, and
- offsite governmental authorities.

The licensee need not develop new scenarios for each drill or each team. However, it is expected that the licensee will maintain a reasonable level of confidentiality so as to ensure the drill is a performance enhancing experience. A reasonable level of confidentiality means that some scenario information could be inadvertently revealed and the drill remain a valid performance enhancing experience. It is expected that the licensee will remove from drill performance statistics any opportunities considered to be compromised. There are many processes for the maintenance of scenario confidentiality that are generally successful. Examples may include confidentiality statements on the signed attendance sheets and spoken admonitions by drill controllers. Examples of practices that may challenge scenario confidentiality include drill controllers or evaluators or mentors, who have scenario knowledge becoming participants in subsequent uses of the same scenarios and use of scenario reviewers as participants.

All individuals qualified to fill the Control Room Shift Manager/ Emergency Director position that actually might fill the position should be included in this indicator.

The communicator is the key ERO position that fills out the notification form, seeks approval and usually communicates the information to off site agencies. Performance of these duties is assessed for accuracy and timeliness and contributes to the DEP PI. Senior managers who do not perform these duties should not be considered communicators even though they approve the form and may supervise the work of the communicator. However, there are cases where the senior manager actually collects the data for the form, fills it out, approves it and then communicates it or hands it off to a phone talker. Where this is the case, the senior manager is also the communicator and the phone talker need not be tracked. The communicator is not expected to be just a phone talker who is not tasked with filling out the form. There is no intent to track a large number of shift communicators or personnel who are just phone talkers.

Data Example

Emergency Response Organization (ERO) Participation

	2Q/98	3Q/98	4Q/98	Prev. Q
Total number of Key ERO personnel	56	56	64	64
Number of Key personnel participating in drill/event in 8 qtrs	48	52	54	53
	2Q/98	**3Q/98**	**4Q/98**	**Prev. Q**
Indicator percentage of Key ERO personnel participating in a drill in 8 qtrs	86%	93%	84%	83%

Thresholds	
Green	≥80%
White	<80%
Yellow	<60%
No Red Threshold	

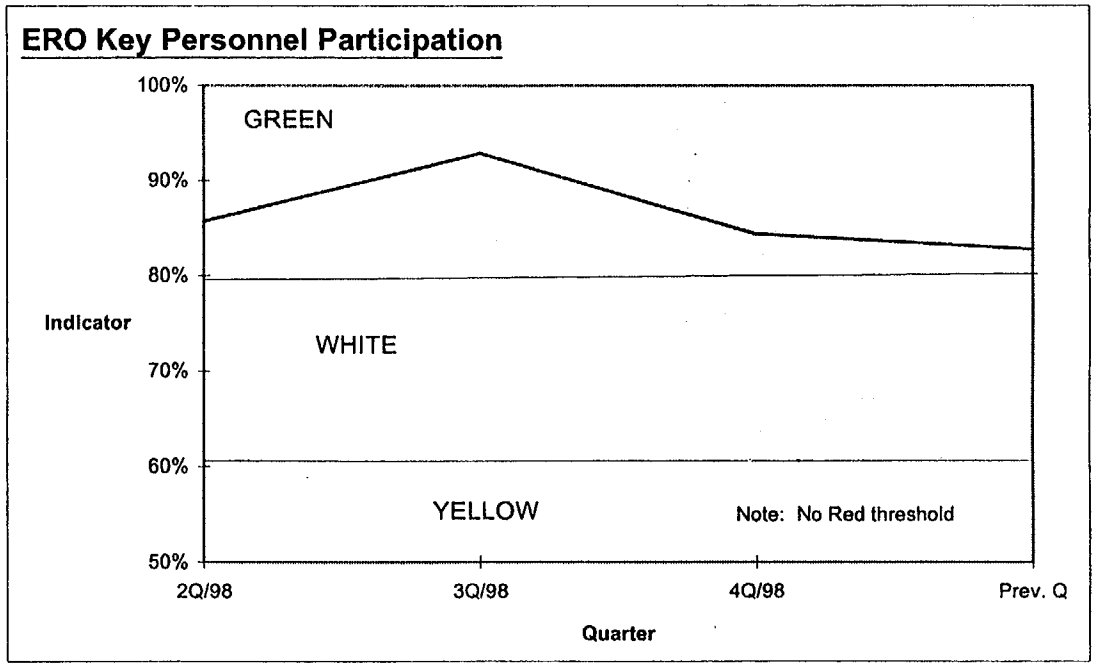

ALERT AND NOTIFICATION SYSTEM RELIABILITY

Purpose

This indicator monitors the reliability of the offsite Alert and Notification System (ANS), a critical link for alerting and notifying the public of the need to take protective actions. It provides the percentage of the sirens that are capable of performing their safety function based on regularly scheduled tests.

Indicator Definition

The percentage of ANS sirens that are capable of performing their function, as measured by periodic siren testing in the previous 12 months.

Periodic tests are the regularly scheduled tests (documented in the licensee's test plan or guidelines) that are conducted to actually test the ability of the sirens to perform their function (e.g., silent, growl, siren sound test). Tests performed for maintenance purposes should not be counted in the performance indicator database.

Data Reporting Elements

The following data are reported: (see clarifying notes)

- the total number of ANS siren-tests during the previous quarter
- the number of successful ANS siren-tests during the previous quarter

Calculation

The site value for this indicator is calculated as follows:

$$\frac{\text{\# of succesful siren - tests in the previous 4 qtrs}}{\text{total number of siren - tests in the previous 4 qtrs}} \times 100$$

Definition of Terms

Siren-Tests: the number of sirens times the number of times they are tested. For example, if 100 sirens are tested 3 times in the quarter, there are 300 siren-tests.

Successful siren-tests are the sum of sirens that performed their function when tested. For example, if 100 sirens are tested three times in the quarter and the results of the three tests are: first test, 90 performed their function; second test, 100 performed their function; third test, 80 performed their function. There were 270 successful siren-tests.

Clarifying Notes

The purpose of the ANS PI is to provide a uniform industry reporting approach and is not intended to replace the FEMA Alert and Notification reporting requirement at this time.

For those sites that do not have sirens, the performance of the licensee's alert and notification system will be evaluated through the NRC baseline inspection program. A site that does not have sirens does not report data for this indicator.

If a siren is out of service for maintenance or is inoperable at the time a regularly scheduled test is conducted, then it counts as both a siren test and a siren failure.

For plants where scheduled siren tests are initiated by local or state governments, if a scheduled test is not performed either intentionally or accidentally, the missed test is not considered as valid test opportunities. Missed test occurrences should be entered in the plant's corrective action program.

If a siren failure is determined to be due only to testing equipment, and subsequent testing shows the siren to be operable (verified by telemetry or simultaneous local verification) without any corrective action having been performed, the siren test should be considered a success. Maintenance records should be complete enough to support such determinations and validation during NRC inspection.

Siren systems may be designed with equipment redundancy or feedback capability. It may be possible for sirens to be activated from multiple control stations. Feedback systems may indicate siren activation status, allowing additional activation efforts for some sirens. If the use of redundant control stations is in approved procedures and is part of the actual system activation process, then activation from either control station should be considered a success. A failure of both systems would only be considered one failure, whereas the success of either system would be considered a success. If the redundant control station is not normally attended, requires setup or initialization, it may not be considered as part of the regularly scheduled test. Specifically, if the station is only made ready for the purpose of siren tests it should not be considered as part of the regularly scheduled test.

If a siren is out of service for scheduled planned refurbishment or overhaul maintenance performed in accordance with an established program, or for scheduled equipment upgrades, the siren need not be counted as a siren test or a siren failure. However, sirens that are out of service due to unplanned corrective maintenance would continue to be counted as failures. Unplanned corrective maintenance is a measure of program reliability. The exclusion of a siren due to temporary unavailability during planned maintenance/upgrade activities is acceptable due to the level of control placed on scheduled maintenance/upgrade activities. It is not the intent to create a disincentive to performing maintenance/upgrades to ensure the ANS performs at its peak reliability.

As part of a refurbishment or overhaul plan, it is expected that each utility would communicate to the appropriate state and/or local agencies the specific sirens to be worked and ensure that a functioning backup method of public alerting would be in-place. The acceptable time frame for allowing a siren to remain out of service for system refurbishment or overhaul maintenance should be coordinated with the state and local agencies. Based on the impact to their organization, these time frames should be specified in upgrade or system improvement implementation plans and/or maintenance procedures. Deviations from these plans and/or procedures would constitute unplanned unavailability and would be included in the PI.

1 **Data Example**

Alert & Notification System Reliability							
Quarter	3Q/97	4Q/97	1Q/98	2Q/98	3Q/98	4Q/98	Prev. Q
Number of succesful siren-tests in the qtr	47	48	49	49	49	54	52
Total number of sirens tested in the qtr	50	50	50	50	50	55	55
Number of successful siren-tests over 4 qtrs				193	195	201	204
Total number of sirens tested over 4 qtrs				200	200	205	210
				2Q/98	3Q/98	4Q/98	Prev. Q
Indicator expressed as a percentage of sirens				96.5%	97.5%	98.0%	97.1%
Thresholds							
Green	≥94%						
White	<94%						
Yellow	<90%						
Red							

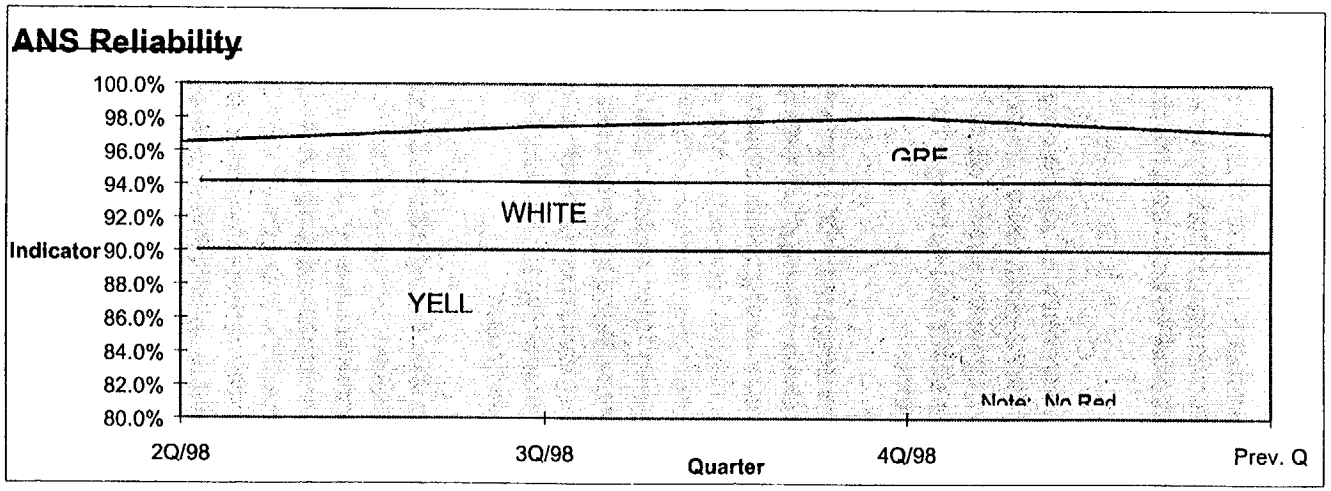

2

2.5 OCCUPATIONAL RADIATION SAFETY CORNERSTONE

The objectives of this cornerstone are to:

(1) keep occupational dose to individual workers below the limits specified in 10 CFR Part 20 Subpart C; and

(2) use, to the extent practical, procedures and engineering controls based upon sound radiation protection principles to achieve occupational doses that are as low as is reasonably achievable (ALARA) as specified in 10 CFR 20.1101(b).

There is one indicator for this cornerstone:

- Occupational Exposure Control Effectiveness

OCCUPATIONAL EXPOSURE CONTROL EFFECTIVENESS

Purpose

The purpose of this performance indicator is to address the first objective of the occupational radiation safety cornerstone. The indicator monitors the control of access to and work activities within radiologically-significant areas of the plant and occurrences involving degradation or failure of radiation safety barriers that result in readily-identifiable unintended dose.

The indicator includes dose-rate and dose criteria that are risk-informed, in that the indicator encompasses events that might represent a substantial potential for exposure in excess of regulatory limits. The performance indicator also is considered "leading" because the indicator:

- encompasses less-significant occurrences that represent precursors to events that might represent a substantial potential for exposure in excess of regulatory limits, based on industry experience; and

- employs dose criteria that are set at small fractions of applicable dose limits (e.g., the criteria are generally at or below the levels at which dose monitoring is required in regulation).

Indicator Definition

The performance indicator for this cornerstone is the sum of the following:

- Technical specification high radiation area (>1 rem per hour) occurrences
- Very high radiation area occurrences
- Unintended exposure occurrences

Data Reporting Elements

The data listed below are reported for each site. For multiple unit sites, an occurrence at one unit is reported identically as an input for each unit. However, the occurrence is only counted once against the site-wide threshold value.

- The number of technical specification high radiation area (>1 rem per hour) occurrences during the previous quarter
- The number of very high radiation area occurrences during the previous quarter
- The number of unintended exposure occurrences during the previous quarter

Calculation

The indicator is determined by summing the reported number of occurrences for each of the three data elements during the previous 4 quarters.

Definition of Terms

Technical Specification High Radiation Area (>1 rem per hour) Occurrence - A nonconformance (or concurrent[13] nonconformances) with technical specifications[14] or comparable requirements in 10 CFR 20[15] applicable to technical specification high radiation areas (>1 rem per hour) that results in the loss of radiological control over access or work activities within the respective high-radiation area (>1 rem per hour). For high radiation areas (>1 rem per hour), this PI does not include nonconformance with licensee-initiated controls that are beyond what is required by technical specifications and the comparable provisions in 10 CFR Part 20.

Technical Specification high radiation areas, commonly referred to as locked high radiation areas, includes any area, accessible to individuals, in which radiation levels from radiation sources external to the body are in excess of 1 rem (10 mSv) per 1 hour at 30 centimeters from the radiation source or 30 centimeters from any surface that the radiation penetrates, and excludes very high radiation areas. Technical specification high radiation areas, in which radiation levels from radiation sources external to the body are less than or equal to 1 rem (10 mSv) per 1 hour at 30 centimeters from the radiation source or 30 centimeters from any surface that the radiation penetrates, are excluded from this performance indicator.

- "Radiological control over access to technical specification high radiation areas" refers to measures that provide assurance that inadvertent entry into the technical specification high radiation areas by unauthorized personnel will be prevented.
- "Radiological control over work activities" refers to measures that provide assurance that dose to workers performing tasks in the area is monitored and controlled.

Examples of occurrences that would be counted against this indicator include:

- Failure to post an area as required by technical specifications,

[13] "Concurrent" means that the nonconformances occur as a result of the same cause and in a common timeframe.

[14] Or comparable provisions in licensee procedures if the technical specifications do not include provisions for high radiation areas.

[15] Includes 10 CFR 20, §20.1601(a), (b), (c), and (d) and §20.1902(b).

- Failure to secure an area against unauthorized access,
- Failure to provide a means of personnel dose monitoring or control required by technical specifications,
- Failure to maintain administrative control over a key to a barrier lock as required by technical specifications, or
- An occurrence involving unauthorized or unmonitored entry into an area.

Examples of occurrences that are not counted include the following:

- Situations involving areas in which dose rates are less than or equal to 1 rem per hour,
- Occurrences associated with isolated equipment failures. This might include, for example, discovery of a burnt-out light, where flashing lights are used as a technical specification control for access, or a failure of a lock, hinge, or mounting bolts, when a barrier is checked or tested.[16]

Very High Radiation Area Occurrence - A nonconformance (or concurrent nonconformances) with 10 CFR 20 and licensee procedural requirements that results in the loss of radiological control over access to or work activities within a very high radiation area. "Very high radiation area" is defined as any area accessible to individuals, in which radiation levels from radiation sources external to the body could result in an individual receiving an absorbed dose in excess of 500 rads (5 grays) in 1 hour at 1 meter from a radiation source or 1 meter from any surface that the radiation penetrates

- "Radiological control over access to very high radiation areas" refers to measures to ensure that an individual is not able to gain unauthorized or inadvertent access to very high radiation areas.
- "Radiological control over work activities" refers to measures that provide assurance that dose to workers performing tasks in the area is monitored and controlled.

Unintended Exposure Occurrence - A single occurrence of degradation or failure of one or more radiation safety barriers that results in unintended occupational exposure(s), as defined below.

Following are examples of an occurrence of degradation or failure of a radiation safety barrier included within this indicator:

- failure to identify and post a radiological area
- failure to implement required physical controls over access to a radiological area
- failure to survey and identify radiological conditions
- failure to train or instruct workers on radiological conditions and radiological work controls
- failure to implement radiological work controls (e.g., as part of a radiation work permit)

An occurrence of the degradation or failure of one or more radiation safety barriers is only counted under this indicator if the occurrence resulted in unintended occupational exposure(s) equal to or exceeding any of the dose criteria specified in the table below. The dose criteria were selected to serve as "screening criteria," only for the purpose of determining whether an

[16] Presuming that the equipment is subject to a routine inspection or preventative maintenance program, that the occurrence was indeed isolated, and that the causal condition was corrected promptly upon identification.

occurrence of degradation or failure of a radiation safety barrier should be counted under this indicator. The dose criteria should not be taken to represent levels of dose that are "risk-significant." In fact, the dose criteria selected for screening purposes in this indicator are generally at or below dose levels that are required by regulation to be monitored or to be routinely reported to the NRC as occupational dose records.

Table: Dose Values Used as Screening Criteria to Identify an Unintended Exposure Occurrence in the Occupational Exposure Control Effectiveness PI

2% of the stochastic limit in 10 CFR 20.1201 on total effective dose equivalent. The 2% value is 0.1 rem.	
10 % of the non-stochastic limits in 10 CFR 20.1201. The 10% values are as follows:	
5 rem	the sum of the deep-dose equivalent and the committed dose equivalent to any individual organ or tissue
1.5 rem	the lens dose equivalent to the lens of the eye
5 rem	the shallow-dose equivalent to the skin or any extremity, other than dose received from a discrete radioactive particle
20% of the limits in 10 CFR 20.1207 and 20.1208 on dose to minors and declared pregnant women. The 20% value is 0.1 rem.	
100% of the limit on shallow-dose equivalent from a discrete radioactive particle. The current value is 50 rem.[17]	

"Unintended exposure" refers to exposure that results in dose in excess of the administrative guideline(s) set by a licensee as part of their radiological controls for access or entry into a radiological area. Administrative dose guidelines may be established

- within radiation work permits, procedures, or other documents,
- via the use of alarm setpoints for personnel dose monitoring devices, or
- by other means, as specified by the licensee.

It is incumbent upon the licensee to specify the method(s) being used to administratively control dose. An administrative dose guideline set by the licensee is not a regulatory limit and does not, in itself, constitute a regulatory requirement. A revision to an administrative dose guideline(s) during job performance is acceptable (with regard to this PI) if conducted in accordance with plant procedures or programs.

If a specific type of exposure was not anticipated or specifically included as part of job planning or controls, the full amount of the dose resulting from that type of exposure should be considered

[17] The NRC is currently proceeding with rulemaking that may result in a change to the limit on shallow-dose equivalent from a discrete radioactive particle. At the time a final rule is issued, the performance indicator value will be revised as needed.

as "unintended" in making a comparison with the respective criteria in the PI. For example, this might include Committed Effective Dose Equivalent (CEDE), Committed Dose Equivalent (CDE), or Shallow Dose Equivalent (SDE).

Clarifying Notes

An occurrence (or concurrent occurrences) that potentially meet the definition of more than one element of the performance indicator will only be counted once. In other words, an occurrence (or concurrent occurrences) will not be double-counted (or triple-counted) against the performance indicator. If two or more individuals are exposed in a single occurrence, the occurrence is only counted once.

Radiography work conducted at a plant under another licensee's 10 CFR Part 34 license is generally outside the scope of this PI. However, if a Part 50 licensee opts to establish additional radiological controls under its own program consistent with technical specifications or comparable provisions in 10 CFR Part 20, then a non-conformance with such additional controls or unintended dose resulting from the non-conformance shall be evaluated under the criteria in the PI.

Data Example

Occupational Exposure Control Effectiveness

Quarter	3Q/95	4Q/95	1Q/96	2Q/96	3Q/96	4Q/96	1Q/97	2Q/97	3Q/97	4Q/97	1Q/98	2Q/98	3Q/98	4Q/98	Prev. Qrtr
Number of technical specification high radiation occurrences during the quarter	0	0	3	0	0	0	0	0	0	0	0	0	0	0	0
Number of very high radiation area occurrences during the quarter	0	0	0	0	0	0	1	0	1	0	0	0	0	0	0
Number of unintended exposure occurrences during the quarter	1	0	0	0	0	0	0	0	0	0	0	0	0	1	0
Reporting Quarter				2Q/96	3Q/96	4Q/96	1Q/97	2Q/97	3Q/97	4Q/97	1Q/98	2Q/98	3Q/98	4Q/98	Prev. Qrtr
Total # of occurrences in the previous 4 qtrs				4	3	3	1	1	2	2	1	1	0	1	1

Thresholds	
Green	≤2
White	>2
Yellow	>5
No Red Threshold	

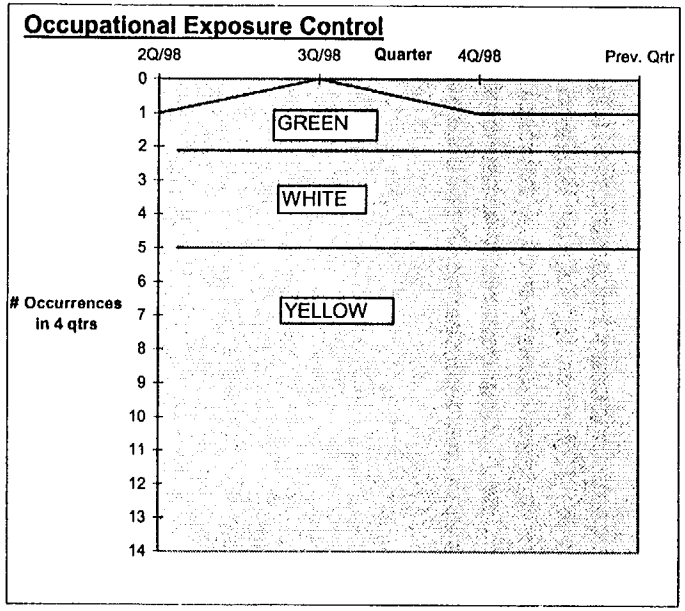

2.6 PUBLIC RADIATION SAFETY CORNERSTONE

RETS/ODCM RADIOLOGICAL EFFLUENT OCCURRENCE

Purpose

To assess the performance of the radiological effluent control program.

Indicator Definition

Radiological effluent release occurrences per site that exceed the values listed below:

Radiological effluent releases in excess of the following values:		
Liquid Effluents	Whole Body	1.5 mrem/qtr
	Organ	5 mrem/qtr
Gaseous Effluents	Gamma Dose	5 mrads/qtr
	Beta Dose	10 mrads/qtr
	Organ Doses from I-131, I-133, H-3 & Particulates	7.5 mrems/qtr

Note:
(1) Values are derived from the Radiological Effluent Technical Specifications (RETS) or similar reporting provisions in the Offsite Dose Calculation Manual (ODCM), if applicable RETS have been moved to the ODCM in accordance with Generic Letter 89-01.
(2) The dose values are applied on a per reactor unit basis in accordance with the RETS/ODCM.
(3) For multiple unit sites, allocation of dose on a per reactor unit basis from releases made via common discharge points is to be calculated in accordance with the methodology specified in the ODCM.

Data Reporting Elements

Number of RETS/ODCM Radiological Effluent Occurrences each quarter involving assessed dose in excess of the indicator effluent values.

Calculation

Number of RETS/ODCM Radiological Effluent Occurrences per site in the previous four quarters.

Definition of Terms

A RETS/ODCM Radiological Effluent Occurrence is defined as a release that exceeds any or all of the five identified values outlined in the above table. These are the whole body and organ dose values for liquid effluents and the gamma dose, beta dose, and organ dose values for gaseous effluents.

Clarifying Notes

The following conditions do not count against the RETS/ODCM Radiological Effluent Occurrence:

- Liquid or gaseous monitor operability issues
- Liquid or gaseous releases in excess of RETS/ODCM concentration or instantaneous dose-rate values
- Liquid or gaseous releases without treatment but that do not exceed values in the table

Not all effluent sample (e.g., composite sample analysis) results are required to be finalized at the time of submitting the quarterly PI reports. Therefore, the reports should be based upon the best-available data. If subsequently available data indicates that the number of occurrences for this PI is different than that reported, then the report should be revised, along with an explanation regarding the basis for the revision.

Data Example

RESTS/ODCM Radiological Effluent Indicator											
Quarter					3Q/97	4Q/97	1Q/98	2Q/98	3Q/98	4Q/98	Prev. Q
Number of RETS/ODCM occurrences in the qtr					1	0	0	1	0	0	1
								2Q/98	3Q/98	4Q/98	Prev. Q
Number of RETS/ODCM occurrences in the previous 4 qtrs								2	1	1	2

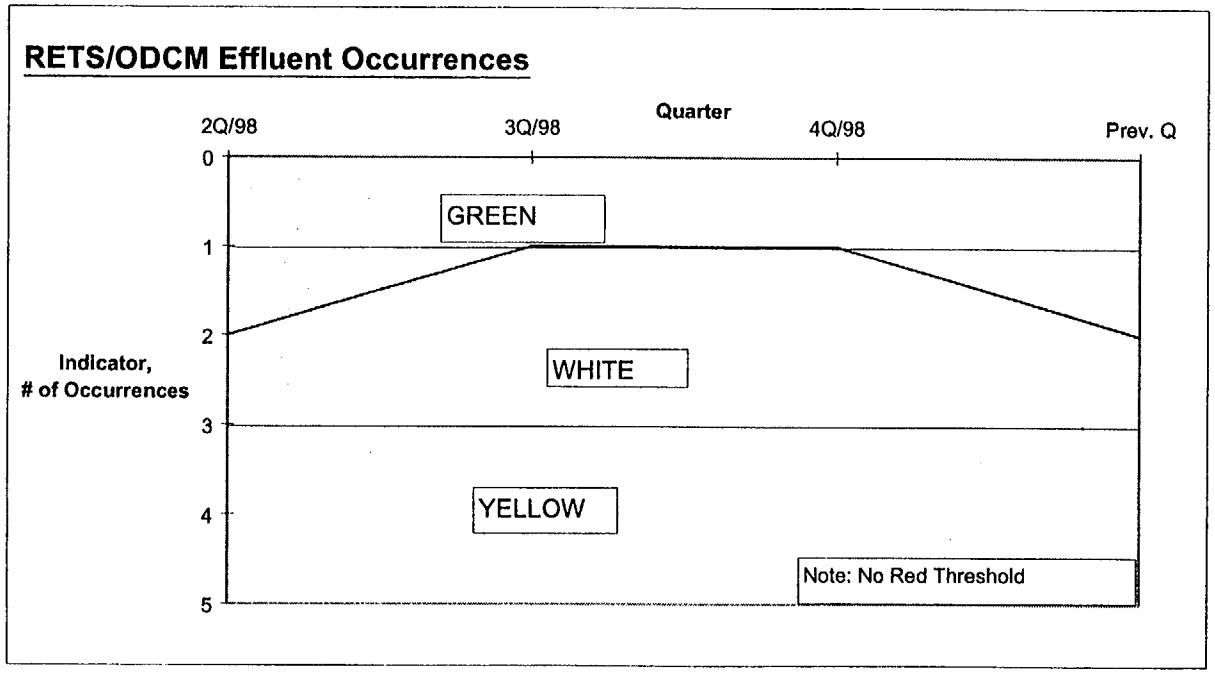

[This page intentionally left blank.]

2.7 PHYSICAL PROTECTION CORNERSTONE

Performance indicators for this cornerstone were selected to provide baseline and trend information needed to evaluate each licensee's physical protection and access authorization systems. The regulatory purpose is to provide high assurance that these systems will function to protect against the design basis threat of radiological sabotage as defined in 10 CFR Part 73. As a surrogate to any engineered physical security protection system, posted security officers provide compensation when a portion of the system is unavailable to perform its intended function. The performance indicator value is not an indication that the protection afforded by the plant's physical security organization is less than required by the regulatory requirements.

An effective access authorization (AA) system minimizes the potential for an internal threat. Basic elements of this program are the personnel screening program, the fitness-for-duty (FFD) program and the continual behavior observation program (referred to as CBOP). When there has been a programmatic failure or significant degradation in the AA system, the licensee is required to take corrective action and report the event to the regulator. These reportable events are the basis for the performance indicators (PI) that are used to monitor program effectiveness.

There is one performance indicator for the physical protection system, and two indicators for access authorization. The performance indicators are assessed against established thresholds using the data and methodology as established in this guideline. The NRC baseline inspections will validate and verify the testing requirements for each system to assure performance standards and testing periodicity are appropriate to provide valid data.

Performance Indicators:
The three physical protection performance indicators are:
1. Protected Area Security Equipment Performance Index,
2. Personnel Screening Program Performance, and
3. Fitness-for-Duty (FFD)/Personnel Reliability Program Performance.

The first indicator serves as a measure of a plant's ability to maintain equipment—to be available to perform its intended function. When compensatory measures are employed because a segment of equipment is unavailable—not adequately performing its intended function, there is no security vulnerability but there is an indication that something needs to be fixed. The PI provides trend indications for evaluation of the effectiveness of the maintenance process, and also provides a method of monitoring equipment degradation as a result of aging that might adversely impact reliability. Maintenance considerations for protected area and vital area portals are appropriately and sufficiently covered by the inspection program.

The remaining two indicators measure significant programmatic deficiencies in the access and trustworthiness programs. These programs verify that persons granted unescorted access to the protected area have satisfactorily completed personal screening and, as a result, are considered to be trustworthy and reliable. Each indicator is based on the number of reportable events, required by regulation, that reveal significant problems in the management and operation of the licensee's access authorization or fitness-for-duty programs.

PROTECTED AREA (PA) SECURITY EQUIPMENT PERFORMANCE INDEX

Purpose:

Operability of the PA security system is necessary to detect and assess safeguards events and to provide the first line of the defense-in-depth physical protection of the plant perimeter. In the event of an attempted encroachment, the intrusion detection system identifies the existence of the threat, the barriers provide a delay to the person(s) posing the threat and the alarm assessment system is used to determine the magnitude of the threat. The PI is used to monitor the unavailability of PA intrusion detection systems and alarm assessment systems to perform their intended function.

Indicator Definition:

PA Security equipment performance is measured by an index that compares the amount of the time CCTVs and IDS are unavailable, as measured by compensatory hours, to the total hours in the period. A normalization factor is used to take into account site variability in the size and complexity of the systems.

Data Reporting Elements:

Report the following site data for the previous quarter for each unit:

- Compensatory hours, CCTVs: The hours (expressed to the nearest tenth of an hour) expended in posting a security officer as required compensation for camera(s) unavailability because of degradation or defects.
- Compensatory hours, IDS: The hours (expressed to the nearest tenth of an hour) expended in posting a security officer as required compensation for IDS unavailability because of degradation or defects.
- CCTV Normalization factor: The number of CCTVs divided by 30. If there are 30 or fewer CCTVs, a normalization factor of 1 should be used.
- IDS Normalization factor: The number of physical security zones divided by 20. If there are 20 or fewer zones, a normalization factor of 1 should be used.

Calculation

The performance indicator is calculated using values reported for the previous four quarters. The calculation involves averaging the results of the following two equations.

$$\text{IDS Unavailability Index} = \frac{\text{IDS Compensatory hours in the previous 4 quarters}}{\text{IDS Normalization Factor x 8760 hrs}}$$

$$\text{CCTV Unavailability Index} = \frac{\text{CCTV Compensatory hours in the previous 4 quarters}}{\text{CCTV Normalization Factor x 8760 hrs}}$$

$$\text{Indicator Value} = \frac{\text{IDS Unavilability Index} + \text{CCTV Unavailability Index}}{2}$$

Definition of Terms

Intrusion detection system (IDS) - E-fields, microwave fields, *etc.*

CCTV - The closed circuit television cameras that support the IDS.

Normalization factors - Two factors are used to compensate for larger than nominal size sites.

- *IDS Normalization Factor*: Using a nominal number of physical security zones across the industry, the normalization factor for IDS is twenty. If a site has twenty or fewer intrusion detection zones, the normalization factor will be 1. If a site has more zones than 20, the factor is the total number of site zones divided by 20 (*e.g.*, 50 ÷ 20 = 2.5).
- *CCTV Normalization Factor*: Using a nominal number of perimeter cameras across the industry, the normalization factor for cameras is 30. If a site has thirty or fewer perimeter cameras, the normalization factor is 1. If a site has more than 30 perimeter cameras, the factor is the total number of perimeter cameras divided by 30 (*e.g.*, 50 ÷ 30 = 1.7).

> Note: The normalization factors are general approximations and may be modified as experience in the pilot program dictates.

Compensatory measures: Measures used to meet physical security requirements pending the return of equipment to service. Protected Area protection is not diminished by the use of compensatory measures for equipment unavailability.

Compensatory man-hours: The man-hours (expressed to the nearest tenth of an hour) that compensatory measures are in place (posted) to address a degradation in the IDS and CCTV systems. When a portion of the system becomes unavailable—incapable of performing its intended function—and requires posting of compensatory measures, the compensatory man-hour clock is started. The period of time ends when the cause of the degraded state has been repaired, tested, and system declared operable.

If a zone is posted for a degraded IDS and a CCTV camera goes out in the same posted area , the hours for the posting of the IDS will not be double counted. However, if the IDS problem is corrected and no longer requires compensatory posting but the camera requires posting, the hours will start to count for the CCTV category.

Equipment unavailability: When the system has been posted because of a degraded condition (unavailability), the compensatory hours are counted in the PI calculation. If the degradation is caused by environmental conditions, preventive maintenance or scheduled system upgrade, the compensatory hours are not counted in the PI calculation. However, if the equipment is degraded after preventive maintenance or periodic testing, compensatory posting would be required and the compensatory hours would count. Compensatory hours stop being counted when the equipment deficiency has been corrected, equipment tested and declared back in service.

Clarifying Notes

Compensatory posting:

- The posting for this PI is only for the protected area perimeter, not vital area doors or other places such posting may be required.

- Postings for IDS segments for false alarms in excess of security program limits would be counted in the PI. In the absence of a false alarm limit in the security program, qualified individuals can disposition the condition and determine whether compensatory posting is required.

- Some postings are the result of non-equipment failures, which may be the result of test/maintenance conditions. For example, in a situation where a part of the IDS is taken out-of-service to check a condition for false alarms not in excess of security program false alarm limits, no compensatory hours would be counted. If the equipment is determined to have malfunctioned, it is not operable and maintenance/repair is required, the hours would count.

- Compensatory hours expended to address simultaneous equipment problems (IDS & CCTV) are counted beginning with the initial piece of equipment that required compensatory hours. When this first piece of equipment is returned to service and no longer requires compensatory measures, the second covered piece of equipment carries the hours. If one IDS zone is required to be covered by more than one compensatory post, the total man-hours of compensatory action are to be counted. If multiple IDS zones are covered by one compensatory post, the man-hours are only counted once.

- IDS equipment issues that do not require compensatory hours would not be counted

- Compensatory man hours for a failed Pan-Tilt-Zoom (PTZ) camera count for the PI only if the PTZ is either being used as a CCTV or is substituting for a failed CCTV.

- The PI metric is based on expended compensatory hours and starts when the IDS or CCTV is actually posted. There are no "fault exposure hours" or other consideration beyond the actual physical compensatory posting. Also, this indicator only uses compensatory man-hours to provide an indication of CCTV or IDS unavailability. If a PTZ camera or other non-personnel (no expended portion of a compensatory man-hour) item is used as the compensatory measure, it is not counted for this PI.

- In a situation where security persons are already in place at continuously manned remote location security booths around the perimeter of the site and there is a need to provide compensatory coverage for the loss of IDS equipment, security persons already in these booths can fulfill this function. If they are used to perform the compensatory function, the hours are included in the PI. The man hours for all persons required to provide compensation are counted. If more persons are assigned than required, only the required compensatory man hours would be counted.

- Compensatory hours for this PI cover hours expended in posting a security officer as required as compensation for IDS and/or CCTV unavailability because of a degradation or defect. If other problems (e.g., security computer or multiplexer) result in compensatory postings because the IDS/CCTV is no longer capable of performing its intended safeguards function, the hours would count. Equipment malfunctions that do not require compensatory posting are not included in this PI.

- If an ancillary system is needed to support proper operability of IDS or CCTV and it fails, and the supported system does not operate as intended, the hours would count. For example, a CCTV camera requires sufficient lighting to perform its function so that such a lighting failure would result in compensatory hours counted for this PI.

Data reporting: For this performance indicator, rounding may be performed as desired provided it is consistent and the reporting hours are expressed to the nearest tenth of an hour. Information supporting performance indicators is reported on a per unit basis. For performance indicators that reflect site conditions (IDS or CCTV), this requires that the information be repeated for each unit on the site. The criterion for data reporting is from the time the failure or deficiency is identified to the time it is placed back in service.

Degradation: Required system/equipment/component is no longer available/capable of performing its intended safeguards function—manufacturer's equipment design capability and/or as covered in the PSP.

Extreme environmental conditions:
Compensatory hours do not count for extreme environmental conditions beyond the design specifications of the system, including severe storms, heavy fog, heavy snowfall, and sun glare that renders the IDS or CCTV temporarily inoperable. If after the environmental condition clears, the zone remains unavailable, despite reasonable recovery efforts, the compensatory hours would not begin to be counted until technically feasible corrective action could be completed. For example, a hurricane decimates a portion of the perimeter IDS and certain necessary components have to be obtained from the factory. Any restoration delay would be independent of the licensee's maintenance capability and therefore would not be counted in the indicator.

Other naturally occurring conditions that are beyond the control of the licensee, such as damage or nuisance alarms from animals are not counted.

Independent Spent Fuel Storage Installations (ISFSIs): This indicator does not include protective measures associated with such installations.

Intended function: The ability of a component to detect the presence of an individual or display an image as intended by manufacturer's equipment design capability and/or as covered in the PSP.

Operational support: E-fields or equivalent that are taken out of service to support plant operations and are not equipment failures but are compensatorily posted do not count for this PI.

Scheduled equipment upgrade:

- In the situation where system degradation results in a condition that cannot be corrected under the normal maintenance program (*e.g.*, engineering evaluation specifies the need for a system/component[18] modification or upgrade), and the system requires compensatory posting, the compensatory hours stop being counted toward the PI for those conditions addressed within the scope of the modification after such an evaluation has been made and the station has formally initiated a commitment in writing with descriptive information about the upgrade plan including scope of the project, anticipated schedule, and expected expenditures. This formally initiated upgrade is the result of established work practices to design fund, procure, install and test the project. A note should be made in the comment section of the PI submittal that the compensatory hours are being excluded under this provision. Compensatory hour counting resumes when the upgrade is complete and operating as intended as determined by site requirements for sign-off. Reasonableness should be applied with respect to a justifiable length of time the compensatory hours are excluded from the PI.

- For the case where there are a few particularly troubling zones that result in formal initiation of an entire system upgrade for all zones, counting compensatory hours would stop only for zones out of service for the upgrade. However, if subsequent failures would have been prevented by the planned upgrade those would also be excluded from the count. This exclusion applies regardless of whether the failures are in a zone that precipitated the upgrade action or not, as long as they are in a zone that will be affected by the upgrade, and the upgrade would have prevented the failure.

Preventive maintenance:

- Scheduled preventive maintenance (PM) on system/equipment/component to include probability and/or operability testing. Includes activities necessary to keep the system at the required functional level. Planned plant support activities are considered PM.
- If during preventive maintenance or testing, a camera does not function correctly, and can be compensated for by means other than posting an officer, no compensatory man-hours are counted.

~~-~~Predictive maintenance is treated as preventive maintenance. Since the equipment has not failed and remains capable of performing its intended security function, any maintenance performed in advance of its actual failure is preventive. It is not the intent to create a disincentive to performing maintenance to ensure the security systems perform at their peak reliability and capability.

[18] A modification to prevent the circumvention of the IDS (or CCTV) (such as the installation of a razor wire barrier) would fall under these provisions because the modification would be acting as an ancillary system of the IDS.(FAQ 279)

Scheduled system upgrade: Activity to improve, upgrade or enhance system performance, as appropriate, in order to be more effective in its reliability or capability.

Data Example

Protected Area Security Equipment Performance Indicator

Quarter	2Q/97	3Q/97	4Q/97	1Q/98	2Q/98	3Q/98	4Q/98	Prev. Q
IDS Compensatory Hours in the qtr	36	48	96	126	65	45	60	55
CCTV Compensatory Hours in the qtr	24	36	100	100	48	56	53	31
IDS Compensatory Hrs in previous 4 qtrs				306	335	332	296	225
CCTV Compensatory Hrs in the previous 4 qtrs				260	284	304	257	188
IDS Normalization Factor	1.05	1.05	1.05	1.05	1.1	1.1	1.1	1.1
CCTV normalization Factor	1.2	1.2	1.2	1.2	1.3	1.3	1.3	1.3
IDS Unavailability Index				0.033268	0.034765	0.034454	0.030718	0.02335
CCTV Unavailability Index				0.024734	0.024939	0.026695	0.022568	0.016509
					2Q/98	3Q/98	4Q/98	Prev. Q
Indicator Value				0.03	0.03	0.03	0.03	0.02

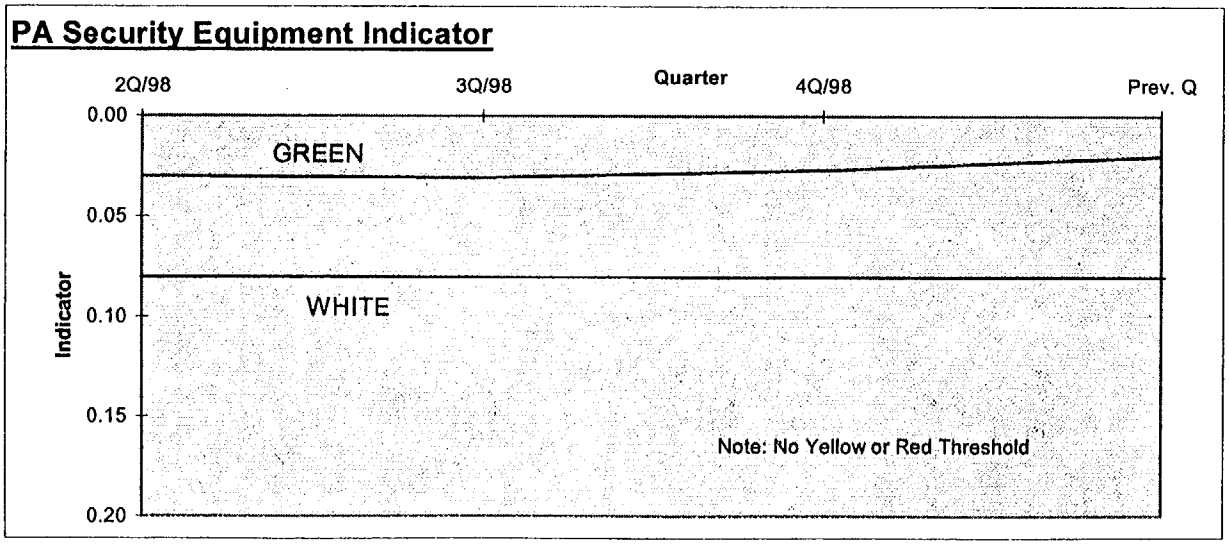

PERSONNEL SCREENING PROGRAM PERFORMANCE

Purpose:

The screening program performance indicator is used to verify that the unescorted access authorization program has been implemented pursuant to 10 CFR §§ 73.56 & 73.57 to evaluate trustworthiness of personnel prior to granting unescorted access to the protected area. The screening program includes psychological evaluation, an FBI criminal history check, a background check and reference check. The program should be able to verify that persons granted unescorted access to the protected area have satisfactorily completed personal screening and, as a result, are considered to be trustworthy and reliable.

Indicator Definition

The number of reportable failures to properly implement the regulatory requirements.

Data Reporting Elements

The number of failures to implement requirement(s) of 10 CFR Part 73.56 and 73.57 that were reportable during the previous quarter under 10 CFR Part 73 Appendix G.

Calculation:

The indicator is a summation of the values reported for the previous four quarters.

Definition of Terms:

Reportable event: - a failure in the licensee's program that requires prompt regulatory notification. This is in contrast to a loggable event, which is not considered significant.

Clarifying Notes:

The only reportable event is that defined in the PI - "a failure in the licensee's program that requires prompt regulatory notification." If you are not required to make a one-hour report concerning a significant failure to meet regulation it is not included for PI purposes. This indicator provides a measure of the effectiveness of programmatic efforts to implement regulatory requirements outlined in 10 CFR §§ 73.56 and 73.57 only and does not apply to the rest of Part 73. It does not include any reportable events that result from the program operating as intended. For example, if a background investigation reveals a significant event concerning a contract worker but unescorted access had not been granted and proper action was taken, this does not count as a data reporting element. It is not a failure to implement the requirements because the program functioned as implemented in compliance with the requirements.

Where a programmatic failure affected multiple sites, the instance is reported for each affected unit at each affected site.

The criterion for reporting of performance indicators is based on the time the failure or deficiency is identified.

Data Examples

Personnel Screening Program Indicator

Quarter	2Q/97	3Q/97	4Q/97	1Q/98	2Q/98	3Q/98	4Q/98	Prev. Q
10 CFR §73.56 One Hr Reports	0	1	3	0	1	1	0	0
Reportable Events in previous 4 qtrs					2Q/98	3Q/98	4Q/98	Prev. Q
					5	5	2	2

Thresholds	
Green	≤2
White	>2
Yellow	>5

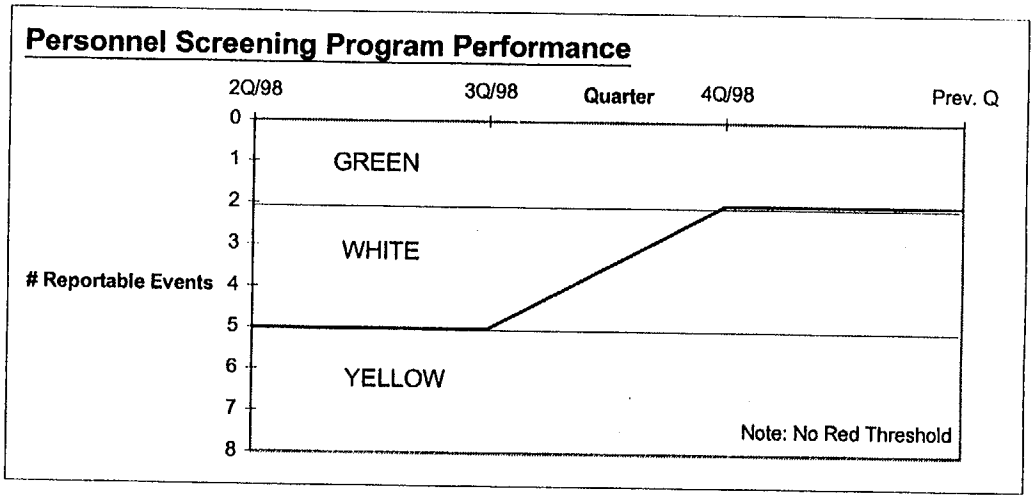

FITNESS-FOR-DUTY (FFD)/PERSONNEL RELIABILITY PROGRAM PERFORMANCE

Purpose:

The fitness-for-duty/personnel reliability program performance indicator is used to assess the implemented program for reasonable assurance that personnel are in compliance with associated requirements, 10 CFR Part 26 and § 73.56, to include: suitable inquiry, testing for substance abuse and behavior observation. This trustworthiness and reliability program is designed to minimize the potential for a person's performance or behavior to adversely affect his or her ability to safely and competently perform required duties.

Indicator Definition

The number of reportable failures to properly implement the requirements of 10 CFR Part 26 and 10 CFR 73.56.

Data Reporting Elements:

The number of failures to implement fitness-for-duty and behavior observation requirements, reportable during the previous quarter.

Calculation:

The indicator is a summation of the values reported for the previous four quarters.

Definition of Terms:

Reportable event: a failure in the licensee's program that requires prompt regulatory notification. This is in contrast to a loggable event, which is not considered significant.

Clarifying Notes:

This indicator provides a measure of the effectiveness of programmatic efforts to implement regulatory requirements outlined in 10 CFR Part 26 and Part 73.56 and does not include any reportable events that result from the program operating as intended. For example, if a contract supervisor is selected for a random drug test, tests positive, and proper action is taken, this does not count as a data reporting element. It is not a failure to implement the requirements because the program functioned as implemented in compliance with the requirements of 10 CFR Part 26.

Only reports of significant programmatic failures of the implemented regulatory requirements are included in the PIs for access authorization or fitness-for-duty.

Where a programmatic failure affected multiple sites, the instance is reported for each affected unit at each affected site.

The criterion for reporting of performance indicators is based on the time the failure or deficiency is identified.

1 **Data Example**

FFD/Personnel Reliability

Quarter	2Q/97	3Q/97	4Q/97	1Q/98	2Q/98	3Q/98	4Q/98	Prev. Q
10 CFR Part 26 Prompt Reports	0	1	1	0	0	1	0	0
					2Q/98	3Q/98	4Q/98	Prev. Q
Reportable Events in previous 4 qtrs					2	2	1	1
Thresholds								
Green	≤2							
White	>2							
Yellow	>5							
Red	N/A							

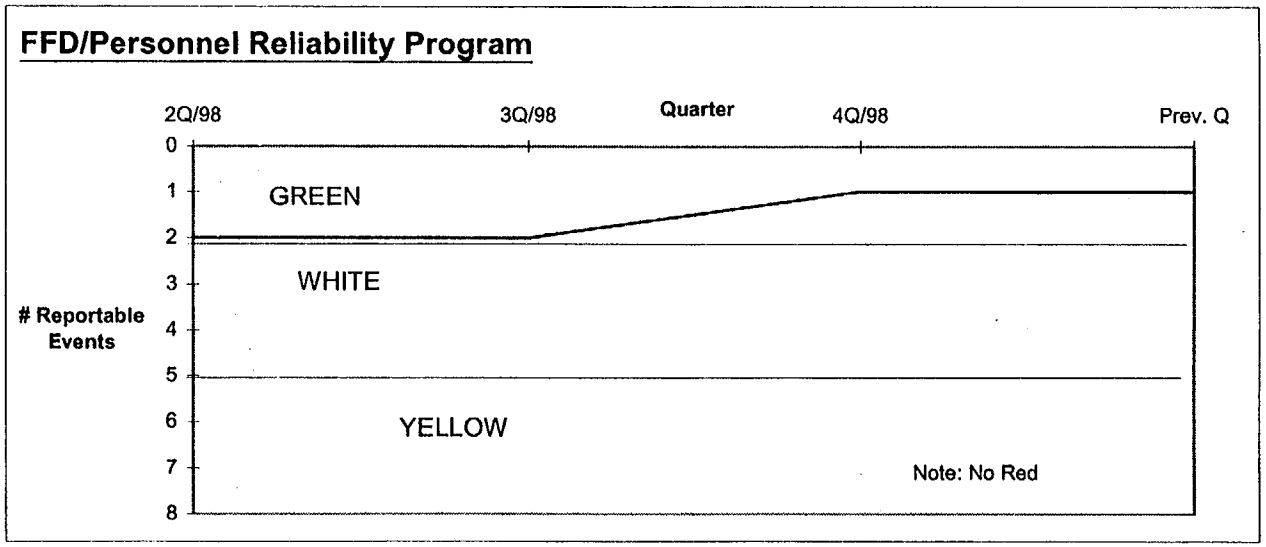

2

APPENDIX A

Acronyms & Abbreviations

AA	Access Authorization
AC	Alternating (Electrical) Current
AFW	Auxiliary Feedwater System
ALARA	As Low As Reasonably Achievable
ANS	Alert & Notification System
BWR	Boiling Water Reactor
CBOP	Behavior Observation Program
CFR	Code of Federal Regulations
CCTV	Closed Circuit Television
DC	Direct (Electrical) Current
DE & AEs	Drills, Exercises and Actual Events
EAL	Emergency Action Levels
EDG	Emergency Diesel Generator
EOF	Emergency Operations Facility
EFW	Emergency Feedwater
ERO	Emergency Response Organization
ESF	Engineered Safety Features
FBI	Federal Bureau of Investigations
FEMA	Federal Emergency Management Agency
FFD	Fitness for Duty
FSAR	Final Safety Analysis Report
FWCI	Feedwater Coolant Injection
IDS	Intrusion Detection System
ISFSI	Independent Spent Fuel Storage Installation
HPCI	High Pressure Coolant Injection
HPCS	High Pressure Core Spray
HPSI	High Pressure Safety Injection
HVAC	Heating, Ventilation and Air Conditioning
LER	Licensee event Report
LPCI	Low Pressure Coolant Injection
LPSI	Low Pressure Safety Injection
LOCA	Loss of Coolant Accident
MSIV	Main Steam Isolation Valve
N/A	Not Applicable
NEI	Nuclear Energy Institute
NRC	Nuclear Regulatory Commission
ODCM	Offsite Dose Calculation Manual
OSC	Operations Support Center
PA	Protected Area
PARs	Protective Action Recommendations
PI	Performance Indicator
PRA	Probabilistic Risk Analysis

PORV	Power Operated Relief Valve
PWR	Pressurized Water Reactor
RETS	Radiological Effluent Technical Specifications
RCIC	Reactor Core Isolation Cooling
RCS	Reactor Coolant System
RHR	Residual Heat Removal
SSFF	Safety System Functional Failure
SSU	Safety System Unavailability
TSC	Technical Support Center

APPENDIX B

STRUCTURE AND FORMAT OF NRC PERFORMANCE INDICATOR DATA FILES

Performance indicator data files submitted to the NRC as part of the Regulatory Oversight Process should conform to structure and format identified below. The NEI performance indicator Website (PIWeb) automatically produces files with structure and format outlined below.

File Naming Convention

Each NRC PI data file should be named according to the following convention. The name should contain the unit docket number, underscore, the date and time of creation and (if a change file) a "C" to indicate that the file is a change report. A file extension of .txt is used to indicate a text file.

Example: 05000399_20000103151710.txt

In the above example, the report file is for a plant with a docket number of 05000399 and the file was created on January 3, 2000 at 10 seconds after 3:17 p.m. The absence of a C at the end of the file name indicates that the file is a quarterly data report.

General Structure

Each line of the report begins with a left bracket (e.g., "[") and ends with a right bracket (e.g., "]"). Individual items of information on a line (elements) are separated by a vertical "pipe" (e.g., "|").

Each file begins with [BOF] as the first line and [EOF] as the last line. These indicate the beginning and end of the data file. The file may also contain one or more "buffer" lines at the end of the file to minimize the potential for file corruption. The second line of the file contains the unit docket number and the date and time of file creation (e.g., [05000399|1/2/2000 14:20:32]). Performance indicator information is contained beginning with line 3 through the next to last line (last line is [EOF]). The information contained on each line of performance indicator information consists of the performance indicator ID, applicable quarter/year (month/year for Barrier Integrity indicators), comments, and each performance indicator data element. Table B-1 provides a description of the data elements and order for each line of performance indicator data in a report file.

Example:
[IE01|3Q1998|Comments here|2|2400]

In the above example, the line contains performance indicator data for Unplanned ~~Scram~~Reactor Shutdowns per 7000 Critical Hours (IE01), during the 3rd quarter of 1998. The applicable comment text is "Comments here". The data elements identify that (see Table B-1) there were 2 unplanned reactor ~~automatic and manual scramswhile~~shutdowns while critical and there were 2400 hours of critical operation during the quarter.

TABLE B-1 – PI DATA ELEMENTS IN NRC DATA REPORT

Performance Indicator	Data Element Number	Description
General Comment	1	Performance Indicator Flag (i.e., GEN)
	2	Report quarter and year (e.g., 1Q2000)
	3	Comment text
Unplanned ~~Scrams~~ Reactor Shutdowns per 7,000 Critical Hours	1	Performance Indicator Flag (i.e., IE01)
	2	Quarter and year (e.g., 1Q2000)
	3	Comment text
	4	Number of unplanned ~~automatic and manual scrams~~reactor shutdowns while critical in the reporting quarter
	5	Number of hours of critical operation in the reporting quarter
~~Scram~~Unplanned Reactor Shutdowns with Loss of Normal Heat Removal	1	Performance Indicator Flag (i.e., IE02)
	2	Quarter and year (e.g., 1Q2000)
	3	Comment text
	4	The number of ~~automatic and manual scrams~~unplanned reactor shutdowns while critical in the reporting quarter in which the normal heat removal path through the main condenser was lost
Unplanned Power Changes per 7,000 Critical Hours	1	Performance Indicator Flag (i.e., IE03)
	2	Quarter and year (e.g., 1Q2000)
	3	Comment text
	4	Number of unplanned power changes, excluding ~~scram~~unplanned reactor shutdowns, during the reporting quarter
	5	Number of hours of critical operation in the reporting quarter
Safety System Unavailability (SSU), Emergency AC Power System	1	Performance Indicator Flag (i.e., MS01)
	2	Quarter and year (e.g., 1Q2000)
	3	Comment text
	4	Planned Unavailable Hours
	5	Unplanned Unavailable Hours
	6	Fault Exposure Unavailable Hours
	7	Hours Train Required for Service
	*	Items 4 to 7 are repeated for each train
Safety System Unavailability (SSU), High Pressure Injection System	1	Performance Indicator Flag (i.e., MS02)
	2	Quarter and year (e.g., 1Q2000)
	3	Comment text
	4	Planned Unavailable Hours
	5	Unplanned Unavailable Hours
	6	Fault Exposure Unavailable Hours
	7	Hours Train Required for Service
	*	Items 4 to 7 are repeated for each train
Safety System Unavailability (SSU), Heat Removal System	1	Performance Indicator Flag (i.e., MS03)
	2	Quarter and year (e.g., 1Q2000)
	3	Comment text

Performance Indicator	Data Element Number	Description
	4	Planned Unavailable Hours
	5	Unplanned Unavailable Hours
	6	Fault Exposure Unavailable Hours
	7	Hours Train Required for Service
	*	Items 4 to 7 are repeated for each train
Safety System Unavailability (SSU), Residual Heat Removal System	1	Performance Indicator Flag (i.e., MS04)
	2	Quarter and year (e.g., 1Q2000)
	3	Comment text
	4	Planned Unavailable Hours
	5	Unplanned Unavailable Hours
	6	Fault Exposure Unavailable Hours
	7	Hours Train Required for Service
	*	Items 4 to 7 are repeated for each train
Safety System Functional Failures	1	Performance Indicator Flag (i.e., MS05)
	2	Quarter and year (e.g., 1Q2000)
	3	Comment text
	4	Number of safety system functional failures during the reporting quarter
Reactor Coolant System Activity (RCSA)	1	Performance Indicator Flag (i.e., BI01)
	2	Month and year (e.g., 3/2000)
	3	Comment text
	4	Maximum calculated RCS activity, in micro curies per gram dose equivalent Iodine 131, as required by technical specifications, for reporting month
	5	Technical Specification limit for RCS activity in micro curies per gram does equivalent Iodine 131
Reactor Coolant System Identified Leakage (RCSL)	1	Performance Indicator Flag (i.e., BI02)
	2	Month and year (e.g., 3/2000)
	3	Comment text
	4	Maximum RCS Identified Leakage calculation for reporting month in gpm
	5	Technical Specification limit for RCS Identified Leakage in gpm
Emergency Response Organization Drill/Exercise Performance	1	Performance Indicator Flag (i.e., EP01)
	2	Quarter and year (e.g., 1Q2000)
	3	Comment text
	4	Number of drill, exercise and actual event opportunities performed timely and accurately during the reporting quarter
	5	Number of drill, exercise and actual event opportunities during the reporting quarter
Emergency Response Organization (ERO) Participation	1	Performance Indicator Flag (i.e.,EP02)
	2	Quarter and year (e.g., 1Q2000)
	3	Comment text
	4	Total Key ERO members that have participated in a drill, exercise, or actual event in the previous 8 qrtrs
	5	Total number of Key ERO personnel at end of reporting quarter
Alert & Notification System Reliability	1	Performance Indicator Flag (i.e., EP03)
	2	Quarter and year (e.g., 1Q2000)

Performance Indicator	Data Element Number	Description
	3	Comment text
	4	Total number of successful ANS siren-tests during the reporting quarter
	5	Total number of ANS sirens tested during the reporting quarter
Occupational Exposure Control Effectiveness	1	Performance Indicator Flag (i.e., OR01)
	2	Quarter and year (e.g., 1Q2000)
	3	Comment text
	4	Number of technical specification high radiation area occurrences during the reporting quarter
	5	Number of very high radiation area occurrences during the reporting quarter
	6	The number of unintended exposure occurrences during the reporting quarter
RETS/ODCM Radiological Effluent Indicator	1	Performance Indicator Flag (i.e., PR01)
	2	Quarter and year (e.g., 1Q2000)
	3	Comment text
	4	Number of RETS/ODCM occurrences in the quarter
Protected Area Security Equipment Performance Indicator	1	Performance Indicator Flag (i.e., PP01)
	2	Quarter and year (e.g., 1Q2000)
	3	Comment text
	4	IDS Compensatory Hours in the quarter
	5	CCTV Compensatory Hours in the quarter
	6	IDS Normalization Factor
	7	CCTV Normalization Factor
Personnel Screening Program Indicator	1	Performance Indicator Flag (i.e., PP02)
	2	Quarter and year (e.g., 1Q2000)
	3	Comment text
	4	10 CFR §73.56 One Hr Reports
FFD/Personnel Reliability	1	Performance Indicator Flag (i.e., PP03)
	2	Quarter and year (e.g., 1Q2000)
	3	Comment text
	4	Number of failures to implement fitness-for-duty and behavior observation requirements, reportable during the reporting quarter.
Fault Exposure Hour Reset	1	Target Performance Indicator (Performance Indicator Flag preceded by "FR", e.g., (FRMS01, FRMS02, FRMS03 or FRMS04)
	2	Target Quarter (Quarter and year of data to be reset, e.g., 1Q2000)
	3	Effective Quarter (Quarter and year that reset data becomes effective, e.g., 1Q2001)
	4	Comment text
	5	Delta Planned Unavailable Hours (Delta change to planned unavailable hours reported for train 1 for Target Quarter. Hours are added to reported hours beginning with Effective Quarter.)

Performance Indicator	Data Element Number	Description
	6	Delta Unplanned Unavailable Hours (Delta change to unplanned unavailable hours reported for train 1 for Target Quarter. Hours are added to reported hours beginning with Effective Quarter.)
	7	Delta Fault Exposure Hours (Delta change to fault exposure hours reported for train 1 for Target Quarter. Hours are subtracted from reported hours beginning with Effective Quarter.)
	*	Items 5 to 7 are repeated for each train

APPENDIX C

Background Information and Cornerstone Development

INTRODUCTION

This section discusses the overall objectives and basis for the performance indicators used for each of the seven cornerstone areas. A more in-depth discussion of the background behind each of the performance indicators identified in the main report may be found in SECY 99-07.

INITIATING EVENTS CORNERSTONE

GENERAL DESCRIPTION

The objective of this cornerstone is to limit the frequency of those events that upset plant stability and challenge critical safety functions, during shutdown as well as power operations. When such an event occurs in conjunction with equipment and human failures, a reactor accident may occur. Licensees can therefore reduce the likelihood of a reactor accident by maintaining a low frequency of these initiating events. Such events include reactor trips due to turbine trip, loss of feedwater, loss of offsite power, and other reactor transients. There are a few key attributes of licensee performance that determine the frequency of initiating events at a plant.

PERFORMANCE INDICATORS

PRAs have shown that risk is often determined by initiating events of low frequency, rather than those that occur with a relatively higher frequency. Such low-frequency, high-risk events have been considered in selecting the PIs for this cornerstone. All of the PIs used in this cornerstone are counts of either initiating events, or transients that could lead to initiating events (see Table 1). They have face validity for their intended use because they are quantifiable, have a logical relationship to safety performance expectations, are meaningful, and the data are readily available. The PIs by themselves are not necessarily related to risk. They are however, the first step in a sequence which could, in conjunction with equipment failures, human errors, and off-normal plant configurations, result in a nuclear reactor accident. They also provide indication of problems that, if uncorrected, increase the risk of an accident. In most cases, where PIs are suitable for identifying problems, they are sufficient as well, since problems that are not severe enough to cause an initiating event (and therefore result in a PI count) are of low risk significance. In those cases, no baseline inspection is required (the exception is shutdown configuration control, for which supplemental baseline inspections is necessary).

MITIGATING SYSTEMS CORNERSTONE

GENERAL DESCRIPTION

The objective of this cornerstone is to ensure the availability, reliability, and capability of systems that respond to initiating events to prevent undesirable consequences (i.e., core damage). When such an event occurs in conjunction with equipment and human failures, a reactor accident may result. Licensees therefore reduce the likelihood of reactor accidents by enhancing the availability and reliability of mitigating systems. Mitigating systems include those systems associated with safety injection, residual heat removal, and emergency AC power. This cornerstone includes mitigating systems that respond to both operating and shutdown events.

PERFORMANCE INDICATORS

While safety systems and components are generally thought of as those that are designed for design-basis accidents, not all mitigating systems have the same risk importance. PRAs have shown that risk is often influenced not only by front-line mitigating systems, but also by support systems and equipment. Such systems and equipment, both safety- and nonsafety-related, have been considered in selecting the PIs for this cornerstone. The PIs are all direct counts of either mitigating system availability or reliability or surrogates of mitigating system performance. They have face validity for their intended use because they are quantifiable, have a logical relationship to safety performance expectations, are meaningful, and the data are readily available. Not all aspects of licensee performance can be monitored by PIs. Risk-significant areas not covered by PIs will be assessed through inspection.

BARRIER INTEGRITY CORNERSTONE

GENERAL DESCRIPTION

The purpose of this cornerstone is to provide reasonable assurance that the physical design barriers (fuel cladding, reactor coolant system, and containment) protect the public from radionuclide releases caused by accidents or events. These barriers play an important role in supporting the NRC Strategic Plan goal for nuclear reactor safety, "Prevent radiation-related deaths or illnesses due to civilian nuclear reactors." The defense in depth provided by the physical design barriers which comprise this cornerstone allow achievement of the reactor safety goal.

PERFORMANCE INDICATORS

The performance indicators for this cornerstone cover two of the three physical design barriers. The first barrier is the fuel cladding. Maintaining the integrity of this barrier prevents the release of radioactive fission products to the reactor coolant system, the second barrier. Maintaining the integrity of the reactor coolant system reduces the likelihood of loss of coolant accident initiating events and prevents the release of radioactive fission products to the containment atmosphere in transients and other events. Performance indicators for reactor coolant system activity and reactor coolant system leakage monitor the integrity of the first two physical design barriers. Even if significant quantities of radionuclides are released into the containment atmosphere, maintaining the integrity of the third barrier, the containment, will limit radioactive releases to the

environment and limit the threat to the public health and safety. The integrity of the containment barrier is ensured through the inspection process.

Therefore, there are three desired results associated with the barrier integrity cornerstone. These are to maintain the functionality of the fuel cladding, the reactor coolant system, and the containment.

EMERGENCY PREPAREDNESS CORNERSTONE

GENERAL DESCRIPTION

Emergency Preparedness (EP) is the final barrier in the *defense in depth* approach to safety that NRC regulations provide for ensuring the adequate protection of the public health and safety. Emergency Preparedness is a fundamental cornerstone of the Reactor Safety Strategic Performance Area. 10 CFR Part 50.47 and Appendix E to Part 50, define the requirements of an EP program and a licensee commits to implementation of these requirements through an Emergency Plan (the Plan). The performance indicators for this cornerstone are designed to ensure that the licensee is capable of implementing adequate measures to protect the public health and safety in the event of a radiological emergency.

PERFORMANCE INDICATORS

Compliance of EP programs with regulation is assessed through observation of response to simulated emergencies and through routine inspection of onsite programs. Demonstration exercises involving onsite and offsite programs, form the key observational tool used to support, on a continuing basis, the reasonable assurance finding that *adequate protective measures can and will be taken in the event of a radiological emergency*. This is especially true for the most risk significant facets of the EP program. This being the case, the PIs for onsite EP draw significantly from performance during simulated emergencies and actual declared emergencies, but are supplemented by direct NRC inspection and inspection of licensee self assessment. NRC assessment of the adequacy of offsite EP will rely (as it does currently) on regular FEMA evaluations.

OCCUPATIONAL EXPOSURE CORNERSTONE

GENERAL DESCRIPTION

This cornerstone includes the attributes and the bases for adequately protecting the health and safety of workers involved with exposure to radiation from licensed and unlicensed radioactive material during routine operations at civilian nuclear reactors. The desired result is the adequate protection of worker health and safety from this exposure. The cornerstone uses as its bases the occupational dose limits specified in 10 CFR 20 Subpart C and the operating principle of maintaining worker exposure "as low as reasonably achievable (ALARA)" in accordance with 10 CFR 20.1101. These radiation protection criteria are based upon the assumptions that a linear relationship, without threshold, exists between dose and the probability of stochastic health effects (radiological risk); the severity of each type of stochastic health effect is independent of dose; and nonstochastic radiation-induced health effects can be prevented by limiting exposures

below thresholds for their induction. Thus, 10 CFR Part 20 requires occupational doses to be maintained ALARA with the exposure limits defined in 10 CFR 20 Subpart C constituting the maximum allowable radiological risk. Industry experience has shown that the occurrences of uncontrolled occupational exposure that potentially could result in an individual exceeding a dose limit have been low frequency events. These potential overexposure incidents are associated with radiation fields exceeding 1000 millirem per hour (mrem/hr) and have involved the loss of one or more radiation protection controls (barriers) established to manage and control worker exposure. The probability of undesirable health effects to workers can be maintained within acceptable levels by controlling occupational exposures to radiation and radioactive materials to prevent regulatory overexposures and by implementing an aggressive and effective ALARA program to monitor, control and minimize worker dose.

PERFORMANCE INDICATORS

A combined performance indicator is used to assess licensee performance in controlling worker doses during work activities associated with high radiation fields or elevated airborne radioactivity areas. The PI was selected based upon its ability to provide an objective measure of an uncontrolled measurable worker exposure or a loss of access controls for areas having radiation fields exceeding 1000 millirem per hour (mrem/hr). The data for the PI are currently being collected by most licensees in their corrective action programs. The PI either directly measures the occurrence of unanticipated and uncontrolled dose exceeding a percentage of the regulatory limits or identifies the failure of barriers established to prevent unauthorized entry into those areas having dose rates exceeding 1000 mrem/hr. The indicator may identify declining performance in procedural guidance, training, radiological monitoring, and in exposure and contamination control prior to exceeding a regulatory dose limit. The effectiveness of the licensee's assessment and corrective action program is considered a cross-cutting issue and is addressed elsewhere.

PUBLIC EXPOSURE CORNERSTONE

GENERAL DESCRIPTION

This cornerstone includes the attributes and the bases for adequately protecting public health and safety from exposure to radioactive material released into the public domain as a result of routine civilian nuclear reactor operations. The desired result is the adequate protection of public health and safety from this exposure. These releases include routine gaseous and liquid radioactive effluent discharges, the inadvertent release of solid contaminated materials, and the offsite transport of radioactive materials and wastes. The cornerstone uses as its bases, the dose limits for individual members of the public specified in 10 CFR 20, Subpart D; design objectives detailed in Appendix I to 10 CFR Part 50 which defines what doses to members of the public from effluent releases are "as low as reasonably achievable" (ALARA); and the exposure and contamination limits for transportation activities detailed in 10 CFR Part 71 and associated Department of Transportation (DOT) regulations. These radiation protection standards require doses to the public be maintained ALARA with the regulatory limits constituting the maximum allowable radiological risk based on the linear relationship between dose received and the probability of adverse health effects.

PERFORMANCE INDICATORS

One PI for the radioactive effluent release program has been initially developed to monitor for inaccurate or increasing projected offsite doses. The effluent radiological occurrence (ERO) PI does not evaluate performance of the radiological environmental monitoring program (REMP) which will be assessed through the routine baseline inspection. For transportation activities, the infrequent occurrences of elevated radiation or contamination limits in the public domain from this measurement area precluded identification of a corresponding indicator. A second PI has been proposed for future use to monitor the inadvertent release of potentially contaminated materials which could result in a measurable dose to a member of the public. These indicators will provide partial assessments of licensee radioactive effluent monitoring and offsite material release activities and were selected to identify decreasing performance prior to exceeding public regulatory dose limits.

PHYSICAL SECURITY CORNERSTONE

GENERAL DESCRIPTION

This cornerstone addresses the attributes and establishes the basis to provide assurance that the physical protection system can protect against the design basis threat of radiological sabotage as defined in 10 CFR 73.1(a). The key attributes in this cornerstone are based on the defense in depth concept and are intended to provide protection against both external and internal threats. To date, there have been no attempted assaults with the intent to commit radiological sabotage and, although there has been no PRA work done in the area of safeguards, it is assumed that there exists a small probability of an attempt to commit radiological sabotage. Although radiological sabotage is assumed to be a small probability, it is also assumed to be risk significant since a successful sabotage attempt could result in initiating an event with the potential for disabling of the safety systems necessary to mitigate the consequences of the event with substantial consequence to public health and safety. An effective security program decreases the risk to public health and safety associated with an attempt to commit radiological sabotage.

PERFORMANCE INDICATORS

Three performance indicators are used to assess licensee performance in the Physical Protection and Access Authorization Systems. The PIs were selected based on their ability to provide objective measures of performance.

The performance of the physical protection system will be measured by the percent of the time all components (barriers, alarms and assessment aids) in the systems are available and capable of performing their intended function. When systems are not available and capable of performing their intended function, compensatory measures must be implemented. Compensatory measures are considered acceptable pending equipment being returned to service, but historically have been found to degrade over time. The degradation of compensatory measures over time, along with the additional costs associated with implementation of compensatory measures provides the incentive for timely maintenance/I&C support to return equipment to service. The percent of time equipment is available and capable of performing its intended function will provide data on the effectiveness of the maintenance process and also provide a method of monitoring equipment degradation as a result of aging that could adversely impact on reliability.

Two performance indicators are used to measure the Assess Authorization System. The performance indicators for this system will count the number of reportable events that reflect program degradations. This data is currently available and there are regulatory requirements to report significant events in the areas of Personnel Screening and FFD. The Behavior Observation significant events are captured in the FFD reporting requirements.

APPENDIX D

Plant Specific Design Issues

This appendix provides additional guidance on plant specific Frequently Asked Questions and identifies resolutions to performance indicator reporting issues that are specific to individual plant designs.

Plant-specific Issues

The NEI 99-02 guidance was written to accommodate situations anticipated to arise at a typical nuclear power plant. However, uncommon plant designs or unique conditions may exist that have not been anticipated. In these cases, licensees should first apply the guidance as written to determine the impact on the indicators. Then, if the licensee believes that there are unique circumstances sufficient to warrant an exception to the guidance as written, the licensee should submit a Frequently Asked Question to NEI for consideration at a public meeting with the NRC. If the FAQ is approved, the issue will be included in Appendix D of this document as a plant-specific issue.

Some provisions in NEI 99-02 may differ from the design, programs, or procedures of a particular plant. Examples include (1) the lack of a high pressure injection system at Oyster Creek, (2) the overlapping Emergency Planning Zones at Kewaunee and Point Beach, and (3) the lack of sirens in the Emergency Notification System at Hatch. There are also a number of plants that perform the containment heat removal and shutdown cooling functions with multiple systems rather than with a Residual Heat Removal system. For these types of situations, licensees should submit an FAQ describing the way a particular function is performed and recommending a method for monitoring that function.

There are some provisions in NEI 99-02 that are intentionally restrictive to ensure that the NRC is informed of the condition of the plant. Such provisions include (1) no exemption of overhaul hours for support systems, (2) limited credit for operator actions to recover unavailable support systems, and (3) limited credit for actions taken to mitigate the effects of unavailability of monitored systems. A risk-informed process would apply a consistent standard of judgment to each situation to determine the appropriate unavailable hours. This provision for plant-specific exceptions will risk-inform the performance indicators using the NRC/Industry public meeting forum to apply that consistent standard of judgment.

In evaluating each request for a plant-specific exception, the NRC/Industry forum will take into consideration factors related to the particular issue. Examples of the factors to be considered for various types of exceptions are listed below:

For exceptions to allow exclusion of unavailable hours for overhaul of support systems, the following issues may be addressed, along with any other pertinent information:

1. NRC approval through an NOED, Technical Specification change, or other means
2. results of a quantitative risk-assessment of the overhaul activity
3. the expected improvement in plant performance as a result of the overhaul

4. the net change in risk as a result of the overhaul

For exceptions to allow credit for operator actions to recover unavailable support systems, the following issues may be addressed, along with any other pertinent information:

1. NRC approval through an NOED, Technical Specification change, or other means
2. risk-significance of the support function(s)
3. capability to recognize the support system unavailability
4. availability of personnel to perform the recovery actions
5. means of communications between the control room and the local operators
6. frequency with which the recovery actions are performed
7. probability of successful completion of recovery actions
8. soundness of engineering analysis

For exceptions to allow credit for operator compensatory actions to mitigate the effects of unavailability of monitored systems, the following issues may be addressed, along with any other pertinent information:

1. NRC approval through an NOED, Technical Specification change, or other means
2. risk-significance of the monitored function(s)
3. capability to recognize the need for compensatory actions
4. availability of trained personnel to perform the compensatory actions
5. means of communications between the control room and the local operators
6. availability of compensatory equipment
7. availability of a procedure for compensatory actions
8. frequency with which the compensatory actions are performed

9. probability of successful completion of compensatory actions within the required time

Oyster Creek

Issue: Oyster Creek does not have a high pressure coolant injection system. The function performed by the HPCI system is accomplished at the Oyster Creek station by a combination of pressure reduction using the Automatic Depressurization System (ADS) and injecting coolant into the vessel using the Core Spray System (low pressure coolant injection). The core spray system consists of two redundant trains each having redundant active components (pumps and valves).

Resolution: For the HPCS indicator, Oyster Creek will report system availability of the Core Spray System and consider ADS as a support function required for system operability. Note: Technical Specifications for Oyster Creek require plant shutdown if ADS is inoperable.

At this point, Oyster Creek will consider core spray as a two train system and consider similar configurations at other plants, the WANO definition, and how unavailability is reported to WANO.

Dresden Station

Issue: At Dresden Station, the RHR function as defined in NEI 99-02 is accomplished using both the Low Pressure Coolant Injection (LPCI) and the Shutdown Cooling (SDC) Systems. LPCI performs the suppression pool heat removal function while SDC performs the reactor core decay heat removal function.

The LPCI System has two parallel heat exchangers and the SDC System consists of three 100% capacity parallel trains. The configuration of the SDC system can be treated as two trains with one installed spare train as described in Section 2.2 of NEI 99-02.

Resolution: Dresden is utilizing two trains of LPCI and two trains of SDC to meet the reporting requirements of NEI 99-02. The third train of SDC should be treated as an installed spare and is subject to the reporting requirements in NEI 99-02.

Kewaunee and Point Beach

Issue: The Kewaunee and Point Beach sites have overlapping Emergency Planning Zones (EPZ). We report siren data to the Federal Emergency Management Agency (FEMA) grouped by criterion other than entire EPZs (such as along county lines). May we report siren data for the PIs in the same fashion to eliminate confusion and prevent 'double reporting' of sirens that exist in both EPZs? Kewaunee and Point Beach share a portion of EPZs and responsibility for the sirens has been divided along the county line that runs between the two sites. FEMA has accepted this, and so far the NRC has accepted this informally.

Resolution: The purpose of the Alert and Notification System Reliability PI is to indicate the licensee's ability to maintain risk-significant EP equipment. In this unique case, each neighboring plant maintains sirens in a different county. Although the EPZ is shared, the plants do not share the same site. In this case, it is appropriate for the licensees to report the sirens they are responsible for. The NRC Web site display of information for each site will contain a footnote recognizing this shared EPZ responsibility.

Surry, North Anna and Beaver Valley Unit 1

Issue: The Safety System Unavailability Performance Indicator for PWR RHR monitors:

- The ability of the RHR system to take a suction from the containment sump, cool the fluid, and inject at low pressure to the RCS, and

- The ability of the RHR system to remove decay heat from the reactor during normal shutdown for refueling and maintenance.

The RHR system for Surry Units 1 & 2, North Anna Units 1& 2 and Beaver Valley Unit 1 provides function 2, shutdown cooling, and does not provide for function 1, post accident recirculation cooling. Function 1, is provided by two 100% low head safety injection pumps taking suction from the containment sump and injecting to the RCS at low pressure and with the heat exchanger function (containment sump water cooling) provided by four 50% capacity

containment recirculation spray system pumps and heat exchangers. How should the Safety system unavailability for these units be calculated?

Resolution: The RHR Performance Indicator should be calculated as follows. The RHR system should be counted as two trains of RHR providing decay heat removal, function 2. The low head safety injection and recirculation spray pumps and associated coolers should be counted as an additional two trains of RHR providing the post accident recirculation cooling, function 1.

Four trains should be monitored as follows:

Train 1 (recirculation mode)
"A" train consisting of the "A" LHSI pump, associated MOVS and the required "A" train recirculation spray pumps heat exchangers, and MOVS.

Train 2 (recirculation mode)
"B" train consisting of the "B" LHSI pump, associated MOVS and the required "B" train recirculation spray pumps, heat exchangers, and MOVS.

Train 3 (shutdown cooling mode)
"A" train consisting of the "A" RHR pump, associated MOVS and heat exchanger.

Train 4 (shutdown cooling mode)
"B" train consisting of the "B" RHR pump, associated MOVS and heat exchanger.

Beaver Valley Unit 2

Issue: The Safety System Unavailability Performance Indicator for PWR RHR monitors:

- The ability of the RHR system to take a suction from the containment sump, cool the fluid, and inject at low pressure to the RCS, and
- The ability of the RHR system to remove decay heat from the reactor during normal shutdown for refueling and maintenance.

The RHR system for Beaver Valley Unit 2 provides function 2, shutdown cooling, and does not provide for function 1, post accident recirculation cooling.

Function 1, is provided by two 100% containment recirculation spray pumps taking suction from the containment sump, and injecting to the RCS at low pressure. The heat exchanger function is provided by two 100% capacity containment recirculation spray system heat exchangers, one per train.

How should the safety system unavailability for BVPS Unit 2 be calculated?

Resolution: The RHR Performance Indicator should be calculated as follows. The two containment recirculation spray pumps and associated coolers should be counted as two trains of RHR providing the post accident recirculation cooling, function 1. The RHR system should be counted as two additional trains of RHR providing decay heat removal, function 2.

Four trains should be monitored as follows:

Train 1 (recirculation mode)
Consisting of the containment recirculation spray pump associated MOVS and the required recirculation spray pump heat exchanger and MOVS.

Train 2 (recirculation mode)
Consisting of containment recirculation spray pump associated MOVS and the required recirculation spray pump heat exchanger, and MOVS.

Train 3 (shutdown cooling mode)
Consisting of the "A" RHR pump, associated MOVS and heat exchanger.

Train 4 (shutdown cooling mode)
Consisting of the "B" RHR pump, associated MOVS and heat exchanger.

ANO-2, Calvert Cliffs, Fort Calhoun, Millstone 2, Palisades, Palo Verde, San Onofre, St. Lucie, and Waterford 3

For CE designed NSSS systems, the functions reported under the RHR SSU performance indicator are accomplished by multiple systems. How should CE plants collect and report data for this indicator?

Issue: The Safety System Unavailability Performance Indicator for PWR RHR monitors:

The ability of the RHR system to take a suction from the containment sump, cool the fluid, and inject at low pressure into the RCS, and

The ability of the RHR system to remove decay heat from the reactor during normal shutdown for refueling and maintenance.

CE ECCS designs differ from the RHR description and typical figures in NEI 99-02. CE designs run all ECCS pumps during the injection phase (Containment Spray (CS), High Pressure Safety Injection (HPSI), and Low Pressure Safety Injection (LPSI)), and on Recirculation Actuation Signal (RAS), the LPSI pumps are automatically shutdown, and the suction of the HPSI and CS pumps is shifted to the containment sump. The HPSI pumps then provide the recirculation phase core injection, and the CS pumps by drawing inventory out of the sump, cooling it in heat exchangers, and spraying the cooled water into containment, support the core injection inventory cooling. How should CE designs report the RHR SSU Performance Indicator?

Resolution: For the first function: "The ability of the RHR system to take a suction from the containment sump, cool the fluid, and inject at low pressure into the RCS."

The CE plant design uses HPSI to "take a suction from the sump", CS to "cool the fluid", and HPSI to "inject at low pressure into the RCS". Due to these design differences, CE plants with this design should monitor this function in the following manner. The HPSI pumps and their suction valves are already monitored under the HPSI function, and no monitoring under the RHR PI is necessary or required. The two containment spray pumps and associated coolers should be

counted as two trains of RHR providing the post accident recirculation cooling.

For the second function: "The ability of the RHR system to remove decay heat from the reactor during normal shutdown for refueling and maintenance."

The CE plant design uses LPSI pumps to pump the water from the RCS, through the SDC heat exchangers, and back to the RCS. Due to this CE design difference, the SDC system should be counted as two trains of RHR providing the decay heat removal function.

Therefore, for the CE designed plants four trains should be monitored, when the particular affected function is required by Technical Specifications, as follows:

Train 1 (recirculation mode) Consisting of the "A" containment spray pump, the required spray pump heat exchanger and associated flow path valves.

Train 2 (recirculation mode) Consisting of the "B" containment spray pump, the required spray pump heat exchanger and associated flow path valves.

Train 3 (shutdown cooling mode) Consisting of the "A" SDC pump, associated flow path valves and heat exchanger.

Train 4 (shutdown cooling mode) Consisting of the "B" SDC pump, associated flow path valves and heat exchanger.

Note that required hours and unavailable hours will be determined by technical specification requirements, not "default hours."

Reporting of RHR data should follow this guidance beginning with the second quarter 2000 data submittal. Historical data was originally reported as two trains. A change report must be submitted to provide historical data for four trains. This can be accomplished in either of two ways:

1. Maintain Train 1 and Train 2 historical data as is. For Train 3 and 4, repeat Train 1 and Train 2 data.

2. Recalculate and revise all historical data using this guidance.

Provide comments with the change report to identify the manner in which the historical data has been revised.

Palo Verde

Issue: NEI 99-02, revision 0 states "Some plants have a startup feedwater pump that requires manual actuation. Startup feedwater pumps are not included in the scope of the AFW system for this indicator." Our plants have startup feedwater pumps that require manual actuation. They are not safety related, but they are credited in the safety analysis report as providing additional reliability/availability to the AFW system and are required by Technical Specifications to be operable in modes 1, 2 and 3. They are also included in the plant PRA and are classified as high risk significant. Should these pumps be treated as third train of auxiliary feedwater for NEI 99-02 monitoring purposes or does the startup feedwater pump exemption apply?

Resolution: Based on the information provided, these particular SSCs should be considered a third train of auxiliary feedwater for NEI 99-02 monitoring purposes.

North Anna

Issue: At North Anna Power Station only one part time CCTV camera is used as part of the PA perimeter threat assessment during refueling outages. With one part time CCTV camera, that has been reliable, we have not had any compensatory hours to report for this portion of the PI. This results in what might seem to be an artificially high performance index for this PI since the CCTV camera portion of the indicator is equally weighted with the IDS portion. Is it appropriate to continue to report CCTV camera compensatory hours for a site with a low number of and infrequently used CCTV cameras?

Resolution: Continue to report in accordance with the current guidance in NEI 99-02. That is, report compensatory hours for the part time CCTV camera as they occur. Put a note for this PI in the comments section submitted to the NRC similar to the following: "Performance data reflects zero, (or X), hours of CCTV camera operation during this reporting period."

Surry

Issue: At Surry Power Station only one full time CCTV camera is used as part of the PA perimeter threat assessment. With only one CCTV camera, that has been reliable, we have not had any compensatory hours to report for this portion of the PI. This results in what might seem to be an artificially high performance index for this PI since the CCTV camera portion of the indicator is equally weighted with the IDS portion. Is it appropriate to continue to report CCTV camera compensatory hours for a site with such a low number of CCTV cameras?

Resolution: Continue to report in accordance with the current guidance in NEI 99-02. That is, report compensatory hours for the single CCTV camera as they occur. Put a note for this PI in the comment section submitted to the NRC similar to the following: "Performance data reflects one CCTV camera."

Indian Point 3

Issue: Regarding the HPSI indicator, our plant has a unique flow path for high head recirculation. If this flow path was found isolated by a manual valve, would fault exposure hours necessarily be counted, even if the main flow path was available?

Our plant has three trains of HPSI with three intermediate pressure pumps fed by separate safety related power supplies. Our three trains share common suction supplies. For the recirculation phase of an accident, two HPSI pumps are required in the short term if the event was a small break LOCA. For a large break LOCA, the HPSI pumps are not required until we transfer to hot leg recirculation, which is required to occur between 14 and 23.4 hours after the LOCA. During high head recirculation (hot or cold leg), the HPSI suction is supplied by the output of low head pumps. We have two internal SI Recirculation pumps located in the containment that provide the primary choice for low head recirculation and for supplying the suction of the HPSI pumps. The external RHR pumps provide a backup to the internal SI Recirculation pumps for both functions. Both sets of pumps deliver flow through the RHR HXs that can then be routed to a common header for the suction of the HPSI pumps.

In the case of a passive failure requiring the isolation of the flow path to the common HPSI suction piping, we have a unique design in that a separate flow path is installed to deliver a suction supply to just one of our three SI pumps (specifically, the 32 SI pump). This flowpath bypasses the RHR HXs and would deliver sump fluid directly from the RHR pump discharge to the suction of the 32 SI pump. The internal recirculation pumps can not support this flowpath, but they can still be run for containment heat removal via recirculation spray if required. This alternate low to high head flowpath does not fit into the typical "train" design common in the industry because it is not used in the event of any active failure, and it relies on powering pumps and valves from all 3 of our EDGs. Our system is also unique in that loss of the alternate flow path is not a failure that equates to the NEI guidance. It appears that the mispositioning of a valve in the designs of the NEI guidance would cause the loss of one of two trains used for high head injection considering either and active or passive failure.

The mispositioning of the valve was reported in LER 2000-001. The LER reported a bounding risk assessment since the IPE does not model the passive failure flow path to the HHSI pumps header. The risk assessment determined that the core damage frequency (CDF) would be approximately 3E-8 per year with a conditional CDF of approximately 7.5E-9 for a period of three months (approximate time of valve misposition). This is not risk significant.

Resolution: The fault exposure hours do not have to be counted. Except as specifically stated in the indicator definition and reporting guidance, no attempt is made to monitor or give credit in the indicator results for the presence of other systems (or sets of components) that add diversity to the mitigation or prevention of accidents. The passive failure mitigation features described as supporting the high head recirculation function, while serving a system diversity function, are not included as part of the high head safety injection system components monitored for this indicator.

Grand Gulf

Issue: Of the 43 sirens associated with our Alert Notification System, two of the sirens are located in flood plain areas. During periods of high river water, the areas associated with these sirens are inaccessible to personnel and are uninhabitable. During periods of high water, the electrical power to the entire area and the sirens is turned off. The frequency and duration of this occurrence varies based upon river conditions but has occurred every year for the past five years and lasts an average of two months on each occasion.

Assuming the sirens located in the flood plain areas are operable prior to the flooded and uninhabitable conditions, would these sirens be required to be included in the performance indicator during flooded conditions?

Resolution: If sirens are not available for operation due to high flood water conditions and the area is deemed inaccessible and uninhabitable by State and/or Local agencies, the siren(s) in question will not be counted in the numerator or denominator of the Performance Indicator for that testing period.

Crystal River Unit 3 (CR-3)

Issue: CR-3 has two EF System pumps and associated piping systems that are credited for Design Basis Accidents of Loss of Main Feedwater, Main Feedwater Line Break, Main Steam Line Break, and Small Break LOCA. A design criterion for the EF System is that a maximum time limit of 60 seconds from initiation signal to full flow shall not be exceeded for automatic initiation. Pumps EFP-2 (steam turbine driven) and EFP-3 (independent diesel driven) are auto-start pumps and are tested for the 60-second time criteria. EFP-3 was installed in 1999 to replace a third pump, the electric motor driven (EFP-1) pump, due to emergency diesel generator electrical loading concerns in certain accident scenarios.

Per FSAR Section 10.5.2, "MAR [modification approval record] 98-03-01-02 installed a diesel driven Emergency Feedwater Pump (EFP-3) to functionally replace the motor driven Emergency Feedwater Pump (EFP-1) as the "A" EF Train."

The motor driven pump does not receive an automatic start signal. The motor driven pump is interlocked with the diesel driven pump so that if the diesel driven pump is operating, EFP-1 will be tripped or its start inhibited. The motor driven pump is maintained for defense-in-depth. EFP-1 can be used to transfer water from the condenser hotwell into the steam generators during a seismic event, if long term cooling is necessary. EFP-1 can be used as a backup to EFP-2 to supply EFW to the steam generators for fires in the Main Control Room, Cable Spreading Room, and Control Complex HVAC Room.

CR-3 is reporting RROP safety system unavailability performance indicator data on the basis of two EF pumps and trains. CR-3 is not reporting on EFP-1. CR-3 design and usage of EFP-1 does not fit the NEI definition of either an "installed spare" or a "redundant extra train."

EFP-1 is safety-related and tested. However, EFP-1 is not required to be OPERABLE in any MODE in accordance with the Improved Technical Specifications (ITS). EFP-1 cannot replace

EFP-3 to meet two train EFW ITS requirements. EFP-1 is included in the PRA but is not a "risk significant" component. EFP-1 is credited in the FSAR as noted above for providing defense-in depth and maintained for potential use in certain seismic and Appendix R conditions.

Should this be reported as a third train of AFW?

Resolution: No, since the pump has no operability requirements in the Technical Specifications.

Crystal River Unit 3 (CR-3)

Issue: CR-3 has an independent motor driven pump and independent piping system for the Auxiliary Feedwater (AFW) System that is separate from the EF System. The AFW pump (FWP-7) and associated components are designed to provide an additional non-safety grade source of secondary cooling water to the steam generators should a loss of all main and EF occur. This reduces reliance on the High Pressure Injection/Power Operated Relief Valve (HPI/PORV) mode of long term cooling. This AFW source was added to CR-3 in 1988 in response to NRC concerns on the issue of EF reliability (Generic Issue 124).

Per the FSAR, "The AFW source is non-safety grade and is not Class 1E powered or electrically connected to the emergency diesel generators. As such, it is not relied upon during design basis events and is intended for use on an "as available" basis only. AFW performs no safety function and there is no impact on nuclear safety if it fails to operate.....It is not environmentally qualified nor Appendix R protected.....Although the AFW source is non-safety grade it is credited by the NRC as a compensating feature in enhancing the reliability of secondary decay heat removal. Auxiliary feedwater may be used, as defense-in depth, during emergency situation when steam generator pressure has been reduced to the point where EFP-2 is no longer available or to avoid EFP-2 cyclic operation."

FWP-7 is powered by an independent, non-safety related, diesel. FWP-7 is a manually started pump and the associated control valves are manually controlled from the Main Control Room.

FWP-7 is not safety related.

FWP-7 is not required by ITS to be OPERABLE in any MODE.

FWP-7 cannot replace either EFP-2 or EFP-3 to meet two train EFW ITS requirements. CR-3 design and usage of FWP-7 does not fit the NEI definition of either an "installed spare" or a "redundant extra train."

FWP-7 is credited in the FSAR for providing defense-in depth and as an additional source non-safety grade source of secondary cooling water to steam generators.

Should this be reported as a third train of AFW?

Resolution: No, since the pump has no operability requirements in the Technical Specifications.

Indian Point 2, Indian Point 3

Issue: The ECCS designs for Indian Point 2 and Indian Point 3 include two safety injection recirculation pumps, the recirculation sump inside containment, piping and associated valves located inside containment, and two RHR/LHSI pumps, piping, containment sump (dedicated to RHR pumps), two RHR heat exchangers and associated valves. These two subsystems are identified in the Technical Specifications and FSAR. The RHR/LHSI system is automatically started on an SI, takes suction from the RWST as do the high head SI pumps (3), provides water in the injection phase of an accident, and is secured during the transfer to the recirculation phase of the accident. The recirculation pumps remain in standby in the injection phase and are started by operator action during switchover for the recirculation phase. The recirculation pumps (2) take suction from their dedicated sump and have the capability to feed the low head injection lines, the containment spray headers, and the suction of the high head SI pumps for high head injection. The RHR head exchangers can provide cooling for both the RHR and recirculation flowpaths. The recirculation pumps are inside containment and can not be tested during operation

The RHR pumps perform the normal decay heat removal function during shutdown operations, and can also be aligned for post accident recirculation. However, the two redundant recirculation pumps represent the primary providers of the low head recirculation function. If a single active failure were to occur, then one recirculation pump would remain available and provides sufficient capacity to meet the core and containment cooling requirements. Only in the event of a passive failure or multiple active failures would it be necessary to align the RHR pumps for recirculation. Use of the RHR pumps for recirculation requires opening two motor operated valves aligned in series to allow suction from the containment sump.

How should the recirculation subsystem unavailability be reported under the mitigating system PI for RHR?

Resolution: The Safety System Unavailability Performance Indicator for RHR monitors two functions:

The ability of the RHR system to draw suction from the containment sump, cool the fluid, inject at low pressure to the RCS, and
The ability of the RHR System to remove decay heat from the reactor during normal shutdown for refueling and maintenance.

At Indian Point Units 2 & 3, the two SI Recirculation Pumps and associated valves and components should be counted as two trains of RHR providing post accident recirculation cooling, function 1. The two RHR pumps and associated valves and components should be counted as two trains of RHR providing decay heat removal, function 2. The RHR Heat Exchangers and associated components and valves which serve both RHR and recirculation functions should be shared by an RHR and an SI Recirculation Pump train, functions 1 and 2.

The two RHR pumps are also capable of providing backup to function 1. Except as specifically stated in the indicator definition and reporting guidance, no attempt is made to monitor or give credit in the indicator results for the presence of other systems (or sets of components) that add diversity to the mitigation or prevention of accidents. The RHR pump suction flowpath from the Containment Sump provides passive failure mitigation features which, while supporting a system

diversity function, are not included as part of the RHR system components monitored for this indicator.

Four (4) trains should be monitored as follows:

Train 1 (shutdown cooling mode)
"A" train consisting of the "A" RHR pump, "A" RHR heat exchanger, and associated valves.

Train 2 (shutdown cooling mode)
"B" train consisting of the "B" RHR pump, "B" RHR heat exchanger, and associated valves.

Train 3 (recirculation mode)
"A" train consisting of the "A" SI Recirculation pump, "A" RHR heat exchanger, and associated valves.

Train 4 (recirculation mode)
"B" train consisting of the "B" SI Recirculation pump, "B" RHR heat exchanger, and associated valves.

The required hours for trains 1 & 2 differ from trains 3 & 4, and will be determined using existing guidelines. Reporting of RHR data should follow this guidance beginning with the first quarter 2001 data submittal.

Catawba Site

Issue: A recently issued FAQ for the NRC Performance Indicators Program revised the positions taken for unavailability associated with planned overhaul hours. FAQ 178 was withdrawn from NEI 99-02 and replaced with FAQ 219. The new FAQ, effective for fourth quarter reporting, adds two clarifying questions and answers to the previous FAQ 178. These two additional items are:

Q. What is considered to be a major component for overhaul purposes?

A. A major component is a prime mover - a diesel engine or, for fluid systems, the pump or its motor or turbine driver or heat exchangers.

Q. Does the limitation on exemption of planned unavailable hours due to overhaul maintenance of "once per train per operating cycle" extend to support systems for a monitored system?

A. For this indicator, only planned overhaul maintenance of the four monitored systems (not to include support systems) may be considered for the exemption of planned unavailable hours.

At Catawba Nuclear Station, periodic testing indicated that crud and rust accumulation in the Nuclear Service Water System (NSWS) headers and piping was reducing water flow. To restore the water flow and the prevent further deterioration of the headers and piping, a refurbishment project was planned to clean the system, replace part of the piping, and rearrange certain piping

access to the headers to avoid water stagnation. Since the NSWS is a shared system between both Catawba units, it was decided that the optimum time to perform this work would be while Unit 1 was in a refueling outage and Unit 2 was at power. This project included both "A" and "B" redundant trains of the system and was sequenced independently during the recent Catawba Nuclear Station Unit 1 End of Cycle 12 (1EOC12) refueling outage. Approximately 8,000 feet of piping was cleaned that included 4,260 feet of 42 inch, 760 feet of 30 inch, 330 feet of 24 inch, 660 feet of 18 inch, 1,935 feet of 10 inch, and 100 feet of 8 inch. Due to the extensive nature of the work performed, each train of NSWS was unavailable for approximately ten days.

Applicable technical specifications were revised through the standard NRC approval process (reference Amendment No. 189 to FOL NPF-35 and Amendment No. 182 to FOL NPF-52 approved October 4, 2000) to allow this project to be performed. These amendments allowed specific systems, including mitigating systems monitored under the NRC performance indicator program, to be inoperable beyond the normal technical specification allowable outage times (AOT) of 72 hours for up to a total of 288 hours on a one-time basis. A significant part of the justification for the license amendment request was a discussion of the risk assessment of the proposed change and the NRC concluded in the SER that the results and insights of the risk analysis supported the proposed temporary AOT extensions.

The NSWS itself is not a monitored system under the performance indicators; however, its unavailability does affect various systems and components, many of which are considered major components by the definition contained in FAQ 219 (diesel engines, heat exchangers, and pumps). The specific performance indicators affected by unavailability of the NSWS are contained in the Mitigating Systems Cornerstone and include: Emergency AC Power System Unavailability, High Pressure Safety Injection System Unavailability, Auxiliary Feedwater System Unavailability, and Residual Heat Removal System Unavailability. If the hours that this overhaul of the NSWS made its supported systems unavailable cannot be excluded from reporting under the performance indicators, it will result in Catawba Unit 2 reporting two white indicators for the 4Q2000 data. These two white indicators for Emergency AC Power System Unavailability and Residual Heat Removal System Unavailability would result in a degraded cornerstone situation as defined in the NRC Action Matrix. Additionally, since these indicators are twelve quarter averages, carrying these hours for the next three years would result in decreased margin to the white/yellow threshold and greatly increase the consequences of additional unavailable hours that might occur during that period of time.

Based on input from NRC and NEI individuals who participated in discussions related to FAQ 219, Duke Energy understands that there was a desire to eliminate exclusion of monitored systems unavailable hours caused by minor "overhaul" type activities on supporting systems. However, it seems unreasonable to require reporting of unavailable hours for situations such as this when the overhaul activities are extensive enough to have required NRC review and approval of a change in technical specifications to allow the increased AOT.

Should this situation be counted?

Resolution: For this plant specific situation, the planned overhaul hours for the nuclear service water support system may be excluded from the computation of monitored system unavailabilities.

Such exemptions may be granted on a case-by-case basis. Factors considered for this approval include (1) the results of a quantitative risk assessment of the overhaul activity, (2) the expected improvement in plant performance as a result of the overhaul, and (3) the net change in risk as a result of the overhaul.

Diablo Canyon Units 1 and 2

Issue: At Diablo Canyon (DC), intrusion of marine debris (kelp and other marine vegetation) at the circulating water intake structures can occur and, under extreme storm conditions result in high differential pressure across the circulating water traveling screens, loss of circulating water pumps and loss of condenser. Over the past several years, DC has taken significant steps, including changes in operating strategy as well as equipment enhancements, to reduce the vulnerability of the plant to this phenomenon. DC has also taken efforts to minimize kelp, however environmental restrictions on kelp removal and the infeasibility of removing (and maintaining removal of) extensive marine growth for several miles around the plant prevent them from eliminating the source if the storm-driven debris. To minimize the challenge to the plant under storm conditions which could likely result in loss of both circulating water pumps, DC procedurally reduces power to 25% power or less. From this power level, the plant can be safely shut down by control rod motion and use of atmospheric dump valves without the need for a reactor trip.

Is this anticipatory plant shutdown in response to an external event, where DC has taken all reasonable actions within environmental constraints to minimize debris quantity and impact, able to be excluded from being counted under IE01 and IE02?

Resolution: In consideration of the intent of the performance indicators and the extensive actions taken by PG&E to reduce the plant challenge associated with shutdowns in response to severe storm-initiated debris loading, the following interpretation will be applied to Diablo Canyon. A controlled shutdown from reduced power (less than 25%), which is performed in conjunction with securing of the circulating water pumps to protect the associated traveling screens from damage due to excessive debris loading under severe storm conditions, will not be considered a "~~scram~~unplanned reactor shutdown." ~~If, however, the actions taken in response to excessive debris loading result in the initiation of a reactor trip (manual or automatic), the event would require counting under both the Unplanned Scrams (IE01) and Scrams with a Loss of Normal Heat Removal (IE02) indicators~~.

South Texas Project Units 1 and 2

Issue: NEI 99-02 requires the Residual Heat Removal (RHR) system to satisfy two separate functions:

- The ability to take a suction from the containment sump, cool the fluid, and inject at low pressure into the RCS
- The ability of the RHR system to remove decay heat from the reactor during a normal unit shutdown for refueling or maintenance

These functions are completed by the Emergency Core Cooling System on most Westinghouse PWR designs. South Texas Project has a unique design for these functions completed by two separate systems with a shared common heat exchanger. How should unavailability be counted for South Texas Project?

Resolution: Due to the unique design South Texas project, unavailability will be determined as follows:

- In plant Modes 1, 2, 3, and 4 South Texas Project will count the unavailability of the Low Head Safety Injection Pump and the flowpath through it's associated RHR Heat Exchanger as the hours to count for the RHR performance indicator. This equipment and flowpath satisfies the requirement to "take a suction from the containment sump, cool the fluid, and inject at low pressure into the RCS". The RHR pump does not contribute to the performance of this safety function since it can not take suction on the containment sump.
- In plant Modes 4, 5, and 6 South Texas Project will count the unavailability hours of the RHR Pump and the flowpath through it's associated RHR Heat Exchanger as the hours to count for the RHR performance indicator. This equipment and flowpath satisfies the requirement to "remove decay heat from the reactor during a normal unit shutdown for refueling or maintenance". The RHR loop is required to be isolated from the Reactor Coolant System in Modes 1, 2, and 3 due to the system design. This requirement prevents the system from performing its intended cooling function until plant pressure and temperature are lowered to a value consistent with the system design.

Overlap times when both functions/systems are required will be adjusted to eliminate double counting the same time periods.

San Onofre

Issue: At our ocean plant we periodically recirculate the water in our intake structure causing the temperature to rise in order to control marine growth. Marine mollusks, if allowed to grow larger than ¾" in size, can clog the condenser and component cooling water heat exchangers. This process is carried out over a six hour period in which the temperature is raised slowly in order to encourage fish to move toward the fish elevator so they can be removed from the intake. Temperature is then reduced and tunnels reversed to start the actual heat treat. Actual time with warm water in the intake is less than half of the evolution. A dedicated operator is stationed for the evolution, and by procedure at any point, can back out and restore normal intake temperatures by pushing a single button to reposition a single circulating water gate. The gate is large and may take several minutes to reposition and clear the intake of the warm water, but a single button with a dedicated operator, in close communication with the control room initiates

the gate closure. During this evolution, one train of service water, a support system for HPSI and RHR, is aligned to the opposite unit intake and remains fully Operable in accordance with the Technical Specifications. The second train is aligned to participate in the heat treat, and while functional, has water beyond the temperature required to perform its design function. This design function of the support system is restored with normal intake temperatures by the dedicated operator realigning the gate with a single button if needed. Gate operation is tested before the start of the evolution and restoration actions are virtually certain. Does the time required to perform these evolutions on a support system need to be counted as unavailability for HPSI and RHR?

Resolution: No. The period of heat treatment will not be considered as "unavailable" for the HPSI and RHR systems because of the utility's actions to limit the environmental impact of heat treatments. As described in the question, the ability of safety systems HPSI and RHR to actuate and start is not impaired by these evolutions There are no unavailable hours.

Susquehanna

Issue: Analysis has shown that when RHR is operated in the Suppression Pool Cooling (SPC) Mode, the potential for a waterhammer in the RHR piping exists for design basis accident conditions of LOCA with simultaneous LOOP. SPC is used during normal plant operation to control suppression pool temperature within Tech Spec requirements, and for quarterly Tech Spec surveillance testing. We do not enter an LCO when SPC mode is used for routine suppression pool temperature control or surveillance testing because, as stated in the FSAR, the system's response to design basis LOCA/LOOP events while in SPC configuration determined that a usage factor of 10% is acceptable. The probability of the event of concern is 6.4 E-10.If the specified design basis accident scenario occurs while the RHR system is in SPC mode, there is a potential for collateral equipment damage that could subsequently affect the ability of the system to perform the safety function. If the time RHR is run in SPC mode must be counted as unavailability, then our station RHR system indicator will be forever white due to the number of hours of normal SPC run time (approximately 300 hours per year). This would tend to mask any other problems, which would not be visible until the indicator turned yellow at 5.0%. Should our station count unavailability for the time when RHR is operated in SPC mode for temperature control or surveillance testing?

Resolution: No, as long as the plant is being operated in accordance with technical specifications and the updated FSAR.

Davis Besse

Issue: Davis-Besse has an independent motor-driven feedwater pump (MDFP) that is separate from the two trains of 100% capacity turbine-driven auxiliary feedwater pumps. The piping for the MDFP (when in the auxiliary feedwater mode) is separate from the auxiliary feedwater system up to the steam generator containment isolation valves. The MDFP is not part of the original plant design, as it was added in 1985 following our loss-of-feedwater event to provide "a diverse means of supplying auxiliary feedwater to the steam generators, thus improving the reliability and availability of the auxiliary feedwater system" (quote from the DB Updated Safety Analysis Report). The resolution to FAQ 182 was that Palo Verde should count the

unavailability hours for their startup feedwater pump. However, since the DB MDFP is manually initiated, DB has not been reporting unavailability hours for the MDFP due to the exception stated on page 69 of NEI 99-02 Revision 0. The DB MDFP is non-safety related, non-seismic, and is not Class 1E powered or automatically connected to the emergency diesel generators. The DB MDFP is required by the Technical Specifications to be operable in modes 1 - 3. However, the Tech Specs do not require the MDFP to be aligned in the auxiliary feedwater mode when below 40 percent power. (The MDFP is used in the main feedwater mode as a startup feedwater pump when less than 40% power). The DB auxiliary feedwater system is designed to automatically feed only an intact steam generator in the event of a steam or feedwater line break. Manual action must be taken to isolate the MDFP from a faulted steam generator. The MDFP is included in the plant PRA, and is classified as high risk-significant for Davis-Besse. Per the DB Tech Specs, the MDFP and both trains of turbine-driven auxiliary feedwater pumps are required in Modes 1-3. The MDFP does not fit the NEI definition of either an "installed spare" or a "redundant extra train" per NEI 99-02, Rev. 0, pages 30 - 31. Should the Davis-Besse MDFP be reported as a third train of Auxiliary Feedwater, even though it is manually initiated? (Note: this FAQ is similar to Appendix D questions for Palo Verde and Crystal River regarding the auxiliary feedwater system)

Resolution: Based on the information provided, this pump should be considered a third train of auxiliary feedwater for NEI 99-02 monitoring purposes. See the Palo Verde Appendix D question.

Prairie Island

Issue: At Prairie Island, the three safeguards Cooling Water (service water) pumps were declared inoperable for lack of qualified source of lineshaft bearing water. This required entry into Technical Specifications 3.0.c (motherhood). The plant requested and received a Notice of Enforcement Discretion (NOED) that allowed continued operation of both units until installation of a temporary modification to provide a qualified bearing water supply to two of the three pumps was complete (14 days). Compensatory measures were implemented to ensure continued availability of water to the lineshaft bearings.

The Cooling Water System is required to mitigate design basis transients and accidents, maintain safe shutdown after external events (e.g. seismic event), and maintain safe shutdown after a fire (Appendix R).The only events for which the Cooling Water System function could have been compromised are the loss of off-site power (LOOP) and a design basis earthquake (DBE). These two events are limiting because they both involve the loss of off-site power. If off-site power continues to power the non-safeguards buses, then the Cooling Water System function is not lost.

Our Risk Assessment determined that the initiating event frequency for a DBE during the 14 day NOED period was so low that it was not a concern. Therefore, this discussion will focus on the LOOP event. The bearing water supply was not fully qualified for LOOP because the power to the automatic backwash for strainers in the system was not safeguards. The concern was that system strainers would plug eventually. However, for this initiating event, function is not lost immediately – it takes time for the strainers to plug. The time it takes is a function of river water quality. Based on an estimate of worst-case river water quality, there are 4 to 7 hours before function would be lost (strainers plug). In fact, testing around the period of the event, showed river water quality was such that the strainers did not plug after 48 hours. Given the time available there is high probability that operators could complete recovery actions before function

was lost. A specific probabilistic risk assessment of the local operator actions determined that the probability of failure was less than 1%.

The NOED was requested to preclude a two unit shutdown. As part of the request for the NOED, compensatory measures to assure that the Cooling Water System function is maintained were proposed. In summary, the compensatory measures were to:

- use a hose (pressure-rated) to connect a safety related source of Cooling Water to the lineshaft bearing supply piping for a Cooling Water Pump
- post a dedicated operator locally in the screenhouse near the Cooling Water Pumps
- pre-stage equipment and tools in the screenhouse
- place identification tags at the connection locations
- train the dedicated operator(s) on the procedure for connecting the hose

The need to implement the compensatory measures would have been identified to the Control Room operator by a loss of bearing flow alarm. As stated earlier, this condition is not expected to occur until a filter becomes plugged 4 to 7 hours after the loss of off site power. The Control Room operator would notify the dedicated operator to perform the procedure. The walkdown of the procedure determined that bearing flow could be established in less than 10 minutes. The pump is capable of operating for approximately one hour without bearing flow. When bearing flow is established, the Control Room alarm will clear, thereby giving the Control Room operator confirmation that the procedure has been performed. The procedure also required an independent verification of the bearing flow restoration within one hour of receiving the loss of bearing water flow alarm.

The Cooling Water System is a support system and it's unavailability affects: High Pressure Safety Injection, Auxiliary Feedwater, Residual Heat Removal, and Unit 1 Emergency AC (Unit 2 Emergency AC is cooled independent of Cooling Water). Using NEI 99-02 criteria, Prairie Island included the time that the Cooling Water Pumps were declared inoperable, approximately 300 hours, as unplanned unavailability in our PI data report. This resulted in two White Indicators (one on each unit), two other systems (one per unit) on the Green/White threshold, and two systems (again, one per unit) close to the Green/White threshold. However, the cause for these Performance Indicators changing from Green to White is a direct result of the lack of qualified bearing water to the Cooling Water pumps. The lack of qualified bearing water was evaluated through the SDP and resulted in a White finding. A root cause evaluation was performed and corrective actions identified. Since the change in the performance Indicators from Green to White was a direct result of the unqualified bearing water, no additional corrective action is planned.

This event does not fit into the guidance given in NEI 99-02. In Rev. 0, page 26, the Clarifying Notes address testing and Control Room operator actions. In Rev. 1, page 28, the Clarifying Notes only allow operator actions taken in the Control Room. We have also reviewed Catawba's FAQ 254. However, their situation addressed maintenance activity results not operator action.

Initially, unavailable hours were recorded from the time of discovery until completion of a Temporary Modification that provided a qualified bearing water supply. This resulted in counting approximately 300 unavailable hours per pump. Since the compensatory actions would

have maintained the Cooling Water System function, should the unavailable hours be counted only from the time of discovery until the compensatory measures were in place?

Resolution: Yes, the unavailable hours should be counted only from the time of discovery until the time that the compensatory measures were in place and remained in place. The actions required to restore the Cooling Water System function were simple and had a high probability of success. This is based upon the following factors:

- A probabilistic risk assessment of the local operator actions calculated less than a 1% probability of failure.
- There is control room alarm to alert the Control Room operator of the need for the compensatory measures.
- There are at least two means of communication between the Control Room and the local operator.
- Recovery action for each pump was simple - connect a hose to two fittings and position two valves.
- Time to complete the recovery action was estimated to be about 10 minutes, based on walk-throughs. Failure to successfully complete the recovery action was not expected to preclude the ability to make additional attempts at recovery.
- A dedicated operator was stationed in the area to complete the recovery action.
- The operator had a procedure and training for accomplishing the recovery action.
- All necessary equipment for recovery action was pre-staged and the fittings and valves were readily accessible.
- Indication of successful recovery actions was available locally and in the Control Room.

Note: This FAQ is specific to the plant and the circumstances, which included NRC approval of compensatory measures and an SDP review. Other licensees should not unilaterally apply this FAQ result, but should submit a plant specific FAQ.

Ginna

Issue: NEI 99-02 states (p 26) that Planned Unavailable Hours include "…testing, unless the test configuration is automatically overridden by a valid starting signal, or the function can be promptly restored either by an operator in the control room or by a dedicated operator stationed locally for that purpose." Also,(p 40) The control room operator must be "…an operator independent of other control room operator immediate actions that may also be required. Therefore, an individual must be 'dedicated.'" Ginna Station's Standby Aux Feedwater Pumps do not have an auto-start signal; they are required to be manually started by an operator within 10 minutes. Should this be counted as unavailable time?

Resolution: No. The PI should not count them since this is an NRC approved design.

Ginna

Issue: Page 62 of NEI 99-02, Rev 0, states in part: "…the isolation valve(s) between the RHR system and the HPSI pump suction is the boundary of the HPSI system." Ginna Station's system design has three MOV's meeting this definition: 857A and 857C (two valves in series from the A

RHR train) and 857B from the B RHR train. Each RHR train is a 100% train. MOVs 857 A and 857C are in parallel with 857B. If Ginna Station was to have a fault exposure to one of these three valves, it would not prevent any of the three HPSI pumps from performing its function of taking a suction from the containment emergency sump. Rather, a fault exposure to one of these three valves would prevent its associated RHR train from supplying a suction from the containment emergency sump to any of the three HPSI pumps. Thus, the boundary between the RHR and HPSI systems needs to be adjusted for Ginna Station.

Resolution: The down-stream side of the isolation valve(s) between the RHR system and the HPSI pump suction is the boundary of the HPSI system for Ginna Station. The isolation valve(s) themselves will be in the RHR system and be associated with their respective RHR train.

Diablo Canyon

Issue: The response to PI FAQ #158 states "Anticipatory power changes greater than 20% in response to expected problems (such as accumulation of marine debris and biological contaminants in certain seasons) which are proceduralized but cannot be predicted greater than 72 hours in advance may not need to be counted if they are not reactive to the sudden discovery of off-normal conditions."

Due to its location on the Pacific coast, Diablo Canyon is subject to kelp/debris intrusion at the circulating water intake structure under extreme storm conditions. If the rate of debris intrusion is sufficiently high, the traveling screens at the intake of the main condenser circulating water pumps (CWPs) become overwhelmed. This results in high differential pressure across the screens and necessitates a shutdown of the affected CWP(s) to prevent damage to the screens.

To minimize the challenge to the plant should a shutdown of the CWP(s) be necessary in order to protect the circulating water screens, the following operating strategy has been adopted:

- If a storm of sufficient intensity is predicted, reactor power is procedurally curtailed to 50% in anticipation of the potential need to shut down one of the two operating CWPs. Although the plant could remain at 100% power, this anticipatory action is taken to avoid a reactor trip in the event that intake conditions necessitate securing a CWP. One CWP is fully capable of supporting plant operation at 50% power.
- If one CWP must be secured based on adverse traveling screen/condenser differential pressure, the procedure directs operators to immediately reduce power to less than 25% in anticipation of the potential need to secure the remaining CWP. Although plant operation at 50% power could continue indefinitely with one CWP, this anticipatory action is taken to avoid a reactor trip in the event that intake conditions necessitate securing the remaining CWP. Reactor shutdown below 25% power is within the capability of the control rods, being driven in at the maximum rate, in conjunction with operation of the atmospheric dump valves.
- Should traveling screen differential pressure remain high and cavitation of the remaining CWP is imminent/occurring, the CWP is shutdown and a controlled reactor shutdown is initiated. Based on anticipatory actions taken as described above, it is expected that a reactor trip would be avoided under these circumstances.

How should each of the above power reductions (i.e., 100% to 50%, 50% to 25%, and 25% to reactor shutdown) count under the Unplanned Power Changes PI?

Resolution: Anticipatory power reductions, from 100% to 50% and from 50% to less than 25%, that result from high swells and ocean debris are proceduralized and cannot be predicted 72 hours in advance. Neither of these anticipatory power reductions would count under the Unplanned Power Changes PI. However, a power shutdown from less than 25% that is initiated on loss of the main condenser (i.e., shutdown of the only running CWP) would count as an unplanned power change since such a reduction is forced and can therefore not be considered anticipatory.

D.C. Cook

Issue: The definition for the Reactor Coolant System (RCS) Leakage performance indicator is "The maximum RCS Identified Leakage in gallons per minute each month per the technical specification limit and expressed as a percentage of the technical specification limit."

Cook Nuclear Plant Unit 1 and 2 report Identified Leakage since the Technical Specifications have a limit for Identified Leakage with no limit for Total Leakage. Plant procedures for RCS leakage calculation requires RCS leakage into collection tanks to be counted as Unidentified Leakage due to non-RCS sources directed to the collection tanks. All calculated leakage is considered Unidentified until the leakage reaches an administrative limit at which point an evaluation is performed to identify the leakage and calculate the leak rate. Consequently, Identified Leakage is unchanged until the administrative limit is reached. This does not allow for trending allowed RCS Leakage. The procedural requirements will remain in place until plant modifications can be made to remove the non-RCS sources from the drain collection tanks. What alternative method should be used to trend allowed RCS leakage for the Barrier Integrity Cornerstone?

Resolution: Report the maximum RCS Total Leakage calculated in gallons per minute each month per the plant procedures instead of the calculated Identified Leakage. This value will be compared to and expressed as a percentage of the combined Technical Specification Limits for Identified and Unidentified Leakage. This reporting is considered acceptable to provide consistency in reporting for plants with the described plant configuration.

Calvert Cliffs

Issue: Calvert Cliffs monitors the Safety System Unavailability Performance Indicator for PWR RHR using the guidance in NEI 99-02 provided for Combustion Engineering (CE) designed plants. When a unit is in Mode 6 and with water level in the Refueling Pool, at 23 feet or more above the top of the irradiated fuel assemblies seated in the reactor vessel, the Technical Specifications only require one Shutdown Cooling (SDC) loop to be operable and in operation. Unlike most of the other CE designed plants, at Calvert Cliffs, the two SDC loops on each unit have a common suction piping line. As a result, to permit required local leak rate testing and other maintenance activities on this common suction line, both trains of SDC would be taken out-of-service. Recognizing this plant specific design feature, the Technical Specifications

specifically allow this required testing and maintenance to be performed without entering the action statements while the plant is in this particular condition. While the SDC trains are unavailable, decay heat is removed by natural convection to the volume of water in the Refueling Pool. Calvert Cliffs Technical Specifications Bases indicates that "a minimum refueling water level of 23 feet above the irradiated fuel assemblies seated in the reactor vessel provides an adequate available heat sink." In this situation, should unavailable hours be counted against the SDC loop given the plant design at Calvert Cliffs?

Resolution: It is appropriate to not count unavailable hours for the above-described situation at Calvert Cliffs. Removing the SDC suction headers from service for the circumstances specifically allowed by the applicable Technical Specification is a reflection of plant design rather than an indication of adequate component or train maintenance practices. Unavailable hours would be counted while operating in accordance with this applicable Technical Specification if a situation occurred that required entering the action statement.

Nine Mile Point

Issue: Some plants are designed to have a residual transfer of the non-safety electrical buses from the generator to an off-site power source when the turbine trip is caused by a generator protective feature. The residual transfer automatically trips large electrical loads to prevent damaging plant equipment during reenergization of the switchgear. These large loads include the reactor feedwater pumps, reactor recirculation pumps, and condensate booster pumps. After the residual transfer is completed the operators can manually restart the pumps from the control room. The turbine trip will result in a reactor scram. Should the trip of the reactor feedwater pumps be counted as a scram with a loss of normal heat removal?

Resolution: No. In this instance, the electrical transfer scheme performed as designed following a scram and the residual transfer. In addition the pumps can be started from the control room. Therefore, this would not count as a scram with a loss of normal heat removal

Turkey Point

Issue: Turkey Point's Unit 3 Emergency Diesel Generators EDGs) are air-cooled, using very large radiators (eight assemblies, each weighing 300-400 pounds) which form one end of the EDG building. After 12 years of operation the radiators began to exhibit signs of leakage, and the plant decided to replace them. Replacing all eight radiator assemblies is a labor-intensive activity, that requires that sections of the missile shield grating be removed, heat deflecting cowling be cut away, and support structures be built above and around the existing radiators to facilitate the fitup process. This activity could not have been completed within the standard 72 hour allowed outage time (AOT). Last year Turkey Point requested, and received, a license amendment for an extended AOT, specifically for the replacement of these radiators. NEI 99-02 allows for the exclusion of planned overhaul maintenance hours from the EAC performance indicator, but does not define overhaul maintenance. Does an activity as extensive as replacing the majority of the cooling system, for which an extended AOT was granted, qualify as overhaul maintenance?

Resolution: In this specific case, yes, for three reasons: (1) that activity involves disassembly and reassembly of major portions of the EDG system en toto, tantamount to an overhaul; (2) the activity is infrequent, i.e., the same as the vendor's recommendation for overhaul of the engine alone (every 12 years); and (3) the NRC specifically granted an AOT extension for this activity supported by a quantitative analysis

APPENDIX E

Frequently Asked Questions

The following table identifies where NRC approved FAQs were incorporated in the text. Not all FAQs have been directly included in the text. (For example, some FAQs were withdrawn; others asked basic questions whose answer was already in the text; and some asked questions not directly related to the PI Guideline.)

TO BE DEVELOPED

Section	FAQs
Introduction	121,217
Unplanned ~~Scram~~Reactor Shutdowns per 7,000 Critical Hours	5,159
~~Scram~~Unplanned Reactor Shutdowns with a Loss of Normal Heat Removal	4,65,180,204,220,238,248,249
Unplanned Power Changes per 7,000 Critical Hours	1,2,3,6,156,158,166,227,228,231,237,244
Safety System Unavailability	11,12,13,14,17,18,19,21,73,74,86,87,88,145, 146,147,148,149,150,151,152,153,154,155, 164 , 165, 167, 168, 171,175,176,192,199, 201,218,219,222,225,239,241,247, 252
Safety System Functional Failure	144
Reactor Coolant System Specific Activity	22,23,24,25,177,226
Reactor Coolant System Leakage	
EP Drill/Exercise Performance	27,29,30,34,36,37,41,43,125,173,197,198,202, 235, 242,243,
ERO Drill Participation	44,45,50,53,54,85,233,234
Alert and Notification System Reliability	123,174,229,232,246
Occupational Exposure Control Effectiveness	92,93,95,96,103,104,107,109,111,112,130, 131,132,203,240
RETS/ODCM Radiological Effluent Occurrence	90
Protected Area Security Equipment Performance Index	59,60,61,68,77,80,81,82,83,136,137,138, 139,140,141,160,162,163,184,185,189, 230,250,253, 256, 259
Personnel Screening Program Performance	127,128,133,134
Fitness-For-Duty/Personnel Reliability Program Performance	58,127,128,129
Appendix D	15,71,172,182,183,184,185,188,200,205,206, 236, 255,254, 263
Withdrawn	113,114,115,116,117,118,119,120,142,169, 178, 190,193