Docket

UNITED STATES
NUCLEAR REGULATORY COMMISSION
WASHINGTON, D. C. 20555

April 20, 1981

RECEIVED
APR 23 1981
U.S. NUCLEAR REGULATORY COMMISSION

Docket Nos. 50-280
and 50-281

Mr. J. H. Ferguson
Executive Vice President - Power
Virginia Electric and Power Company
Post Office Box 26666
Richmond, Virginia 23261

Dear Mr. Ferguson:

SUBJECT: ORDER FOR MODIFICATION OF LICENSES CONCERNING PRIMARY COOLANT SYSTEM PRESSURE ISOLATION VALVES

This letter transmits an Order for Modification of License which revises the Technical Specifications for Facility Operating License No. DPR-32 and DPR-37 for the Surry Power Station, Unit Nos. 1 and 2. The change is a result of the information you provided in response to our 10 CFR 50.54(f) letter of February 23, 1980, regarding primary coolant system pressure isolation valves. Based upon our review of your response, as well as other previously docketed information, we have concluded that a WASH-1400 Event V valve configuration exists at your facility and that corrective action as defined in the attached Order is necessary.

Attached to the Order for Modification of License is the Technical Specification Report (TER) which supports the Order; and the plant Technical Specifications which will ensure public health and safety over the operating life of your facility. We are aware that there may be editorial corrections to the attached TER. Please note that the Technical Specifications correctly delineate the requirements for your facility.

In addition to Event V valve configurations, we are continuing our efforts to review other configurations located at high pressure/low pressure system boundaries for their potential risk contribution to an intersystem LOCA. Therefore, further activity regarding the broader topic of intersystem LOCA's may be expected in the future.

8104270224
P

A copy of the enclosed Order is being filed with the Office of the Federal Register for publication.

Sincerely,

Steven A. Varga, Chief
Operating Reactors Branch #1
Division of Licensing

Enclosure:
Order for Modification
of Licenses

cc w/enclosure:
See next page

Mr. J. H. Ferguson
Virginia Electric and Power Company

cc: Mr. Michael W. Maupin
Hunton and Williams
Post Office Box 1535
Richmond, Virginia 23213

Mr. J. L. Wilson, Manager
P. O. Box 315
Surry, Virginia 23883

Swem Library
College of William and Mary
Williamsburg, Virginia 23185

Donald J. Burke, Resident Inspector
Surry Power Station
U. S. Nuclear Regulatory Commission
Post Office Box 166
Route 1
Surry, Virginia 23883

Mr. Sherlock Holmes, Chairman
Board of Supervisors of Surry County
Surry County Courthouse, Virginia 23683

Commonwealth of Virginia
Council on the Environment
903 Ninth Street Office Building
Richmond, Virginia 23219

Attorney General
1101 East Broad Street
Richmond, Virginia 23219

Mr. James R. Wittine
Commonwealth of Virginia
State Corporation Commission
Post Office Box 1197
Richmond, Virginia 23209

Director, Criteria and Standards Division
Office of Radiation Programs (ANR-460)
U. S. Environmental Protection Agency
Washington, D. C. 20460

U. S. Environmental Protection Agency
Region III Office
ATTN: EIS COORDINATOR
Curtis Building - 6th Floor
6th and Walnut Streets
Philadelphia, Pennsylvania 19106

UNITED STATES OF AMERICA
NUCLEAR REGULATORY COMMISSION

| | | |
|---|---|---|
| In the Matter of<br>Virginia Electric and<br>Power Company<br>(Surry Power Station,<br>Unit Nos. 1 and 2) | )<br>)<br>)<br>)<br>)<br>)<br>) | Docket Nos. 50-280 and 50-281 |

ORDER FOR MODIFICATION OF LICENSES

I

The Virginia Electric and Power Company (the licensee) holds Facility Operating License Nos. DPR-32 and DPR-37, which authorizes the licensee to operate the Surry Power Station Unit Nos. 1 and 2 at power levels not in excess of 2441 megawatts thermal rated power. The licenses were originally issued on May 25, 1972 and January 29, 1973 and will expire on June 25, 2008. The facilities, which are located at the licensee's site in Surry County, Virginia, are pressurized water reactors (PWR) used for the commercial generation of electricity.

II

The Reactor Safety Study (RSS), WASH-1400, identified in a PWR an inter-system loss of coolant accident (LOCA) which is a significant contributor to risk of core melt accidents (Event V). The design examined in the RSS contained in-series check valves isolating the high pressure Primary Coolant System (PCS) from the Low Pressure Injection System (LPIS) piping. The scenario which leads to the Event V accident is initiated by the failure of these check valves to function as a pressure isolation barrier. This causes an overpressurization and rupture of the LPIS low pressure piping which results in a LOCA that bypasses containment.

8104270232

In order to better define the Event V concern, all light water reactor licensees were requested by letter dated February 23, 1980, to provide the following in accordance with 10 CFR 50.54(f):

1. Describe the valve configurations and indicate if an Event V isolation valve configuration exists within the Class I boundary of the high pressure piping connecting PCS piping to low pressure system piping; e.g., (1) two check valves in series, or (2) two check valves in series with a motor operated valve (MOV);
2. If either of the above Event V configurations exist, indicate whether continuous surveillance or periodic tests are being performed on such valves to ensure integrity. Also indicate whether valves have been known, or found, to lack integrity; and
3. If either of the above Event V configurations exist, indicate whether plant procedures should be revised or if plant modifications should be made to increase reliability.

In addition to the above, licensees were asked to perform individual check valve leak testing prior to plant startup after the next scheduled outage.

By letters dated March 14 and August 13, 1980, the licensee responded to our February letter. Based upon the NRC review of this response as well as the review of previously docketed information for the facility, I have concluded in consonance with the attached Safety Evaluation (Attachment 1) that one or more valve configuration(s) of concern exist at the facility. The attached Technical Evaluation Report (TER) (Attachment 2) provides, in Section 4.0, a tabulation of the subject valves.

The staff's concern has been exacerbated due not only to the large number of plants which have an Event V configuration(s) but also because of recent unsatisfactory operating experience. Specifically, two plants have leak tested check valves with unsatisfactory results. At Davis-Besse, a pressure isolation check valve in the LPIS failed and the ensuing investigation found that valve internals had become disassembled. At the Sequoyah Nuclear Plant, two Residual Heat Removal (RHR) injection check valves and one RHR recirculation check valve failed because valves jammed open against valve over-travel limiters.

It is, therefore, apparent that when pressure isolation is provided by two in-series check valves and when failure of one valve in the pair can go undetected for a substantial length of time, verification of valve integrity is required. Since these valves are important to safety, they should be tested periodically to ensure low probability of gross failure. As a result, I have determined that periodic examination of check valves must be undertaken by the licensee as provided in Section III below to verify that each valve is seated properly and functioning as a pressure isolation device. Such testing will reduce the overall risk of an inter-system LOCA. The testing mandated by this Order may be accomplished by direct volumetric leakage measurement or by other equivalent means capable of demonstrating that leakage limits are not exceeded in accordance with Section 2.2 of the attached TER.

In view of the operating experiences described above and the potential consequences of check valve failure, I have determined that prompt action is necessary to increase the level of assurance that multiple pressure isolation barriers are in place and will remain intact. Therefore, the public health, safety and interest require that this modification of Facility Operating License Nos. DPR-32 and DPR-37 be immediately effective.

III

Accordingly, pursuant to Section 161i of the Atomic Energy Act of 1954, as amended, and the Commission's regulations in 10 CFR Parts 2 and 50, IT IS HEREBY ORDERED THAT EFFECTIVE IMMEDIATELY, Facility Operating License Nos. DPR-32 and DPR-37 are modified by the addition of the following requirements:

1. Implement Technical Specifications (Attachment 3) which require periodic surveillance over the life of the plant and which specify limiting conditions for operation for PCS pressure isolation valves.
2. If check valves have not been (a) individually tested within 12 months preceding the date of the Order, and (b) found to comply with the leakage rate criteria set forth in the Technical Specifications described in Attachment 3, the MOV in each line shall be closed within 30 days of the effective date of this Order and quarterly Inservice Inspection (ISI) MOV cycling ceased until the check valve tests have been satisfactorily accomplished. (Prior to closing the MOV, procedures shall be implemented and operators trained to assure

that the MOV remains closed. Once closed, the MOV shall be tagged closed to further preclude inadvertent valve opening).

3. The MOV shall not be closed as indicated in paragraph 2 above unless a supporting safety evaluation has been prepared. If the MOV is in an emergency core cooling system (ECCS), the safety evaluation shall include a determination as to whether the requirements of 10 CFR 50.46 and Appendix K to 10 CFR Part 50 will continue to be satisfied with the MOV closed. If the MOV is not in an ECCS, the safety evaluation shall include a determination as to whether operation with the MOV closed presents an unreviewed safety question as defined in 10 CFR 50.59(a)(2). If the requirements of 10 CFR 50.46 and Appendix K have not been satisfied, or if an unreviewed safety question exists as defined in 10 CFR 50.59, then the facility shall be shut down within 30 days of the date of this Order and remain shutdown until check valves are satisfactorily tested in accordance with the Technical Specifications set forth in Attachment 3.

4. The records of the check valve tests required by this Order shall be made available for inspection by the NRC's Office of Inspection and Enforcement.

IV

The licensee or any other person who has an interest affected by this Order may request a hearing on this Order within 25 days of its publication in the Federal Register. A request for hearing shall be submitted to the Secretary, U.S. Nuclear Regulatory Commission, Washington, D.C. 20555. A copy of the request shall also be sent to the Executive Legal Director at the same address, and to Mr. Michael W. Maupin, Houston and Williams, Post Office Box 1535, Richmond, Virginia 23213, attorney for the licensee. If a hearing is requested by a person other than the licensee, that person shall describe, in accordance with 10 CFR 2.714(a)(2), the manner in which his or her interest is affected by this Order. ANY REQUEST FOR A HEARING SHALL NOT STAY THE IMMEDIATE EFFECTIVENESS OF THIS ORDER.

If a hearing is requested by the licensee or other person who has an interest affected by this Order, the Commission will issue an order designating the time and place of any such hearing. If a hearing is held, the issues to be considered at such a hearing shall be:

(a) Whether the licensee should be required to individually leak test check valves in accordance with the Technical Specifications set forth in Attachment 3 to this Order.

(b) Whether the actions required by Paragraphs 2 and 3 of Section III of this Order must be taken if check valves have not been tested within 12 months preceding the date of this order.

Operation of the facility on terms consistent with this Order is not stayed by the pendency of any proceedings on this Order. In the event that a need for further action becomes apparent, either in the course of proceedings on this Order or any other time, the Director will take appropriate action.

FOR THE NUCLEAR REGULATORY COMMISSION

Darrell G. Eisenhut, Director
Division of Licensing

Effective Date: April 20, 1981
Bethesda, Maryland

Attachments:
1. Safety Evaluation Report
2. Technical Evaluation Report
3. Technical Specifications

UNITED STATES
NUCLEAR REGULATORY COMMISSION
WASHINGTON D. C. 20555

Attachment 1

# SAFETY EVALUATION REPORT
# SURRY POWER STATION, UNIT NOS. 1 AND 2
# PRIMARY COOLANT SYSTEM PRESSURE ISOLATION VALVES
# (WASH-1400, EVENT V)

## 1.0 Introduction

The Reactor Safety Study (RSS), WASH-1400, identified in a PWR an intersystem loss of coolant accident (LOCA) which is a significant contributor to risk of core melt accidents (Event V). The design examined in the RSS contained in-series check valves isolating the high pressure Primary Coolant System (PCS) from the Low Pressure Injection System (LPIS) piping. The scenario which leads to the Event V accident is initiated by the failure of these check valves to function as a pressure isolation barrier. This causes an overpressurization and rupture of the LPIS low pressure piping which results in a LOCA that bypasses containment.

In order to better define the Event V concern, all light water reactor licensees were requested by 10 CFR 50.54(f) letter, dated February 23, 1980, to identify valve configurations of concern and prior valve test results, if any. By letters dated March 14, 1980 and August 13, 1980, the licensee responded to our request and this information was subsequently transmitted to our contractor, the Franklin Research Center, for verification that the licensee had correctly identified the subject valve configurations.

## 2.0 Evaluation

In order to prepare the Technical Evaluation Report (TER) it was necessary that the contractor verify and evaluate the licensee's response to our February 1980 letter. The NRC acceptance criteria used by Franklin were based on WASH-1400 findings, probabilistic analyses and appropriate Standard Review Plan requirements. With respect to the verification of the licensee's response to our information request, the Franklin evaluation was based on FSAR information, ISI/IST site visit data, and other previously docketed information. The attached Franklin TER correctly identifies the subject valve configurations.

## 3.0 Conclusion

Based on our review of the Franklin TER, we find that the valve configurations of concern have been correctly identified. Since periodic testing of these PCS pressure isolation valves will reduce the probability of an intersystem LOCA we, therefore, conclude that the requirement to test these valves should be incorporated into the plant's Technical Specifications.

Dated: April 20, 1981

Dupl

8104270084

ATTACHMENT 2

THIS REPORT SUPERSEDES ISSUE OF AUGUST 22, 1980

TECHNICAL EVALUATION REPORT

# PRIMARY COOLANT SYSTEM PRESSURE ISOLATION VALVES

VIRGINIA ELECTRIC & POWER COMPANY
SURRY UNITS 1 AND 2

NRC DOCKET NO. 50-280, 50-281

NRC TAC NO. 12937, 12938

NRC CONTRACT NO. NRC-03-79-118

FRC PROJECT C5257

FRC TASK 267, 268

*Prepared by*

Franklin Research Center
The Parkway at Twentieth Street
Philadelphia, PA 19103

Author: P. N. Noell
T. C. Stilwell
FRC Group Leader: P. N. Noell

*Prepared for*

Nuclear Regulatory Commission
Washington, D.C. 20555

Lead NRC Engineer: P. J. Polk

October 24, 1980

This report was prepared as an account of work sponsored by an agency of the United States Government. Neither the United States Government nor any agency thereof, or any of their employees, makes any warranty, expressed or implied, or assumes any legal liability or responsibility for any third party's use, or the results of such use, of any information, apparatus, product or process disclosed in this report, or represents that its use by such third party would not infringe privately owned rights.

Franklin Research Center
A Division of The Franklin Institute
The Benjamin Franklin Parkway, Phila., Pa. 19103 (215) 448-1000

8104270236

# 1.0 INTRODUCTION

The NRC has determined that certain isolation valve configurations in systems connecting the high-pressure Primary Coolant System (PCS) to lower-pressure systems extending outside containment are potentially significant contributors to an intersystem loss-of-coolant accident (LOCA). Such configurations have been found to represent a significant factor in the risk computed for core melt accidents.

The sequence of events leading to the core melt is initiated by the concurrent failure of two in-series check valves to function as a pressure isolation barrier between the high-pressure PCS and a lower-pressure system extending beyond containment. This failure can cause an overpressurization and rupture of the low-pressure system, resulting in a LOCA that bypasses containment.

The NRC has determined that the probability of failure of these check valves as a pressure isolation barrier can be significantly reduced if the pressure at each valve is continuously monitored, or if each valve is periodically inspected by leakage testing, ultrasonic examination, or radiographic inspection. The NRC has established a program to provide increased assurance that such multiple isolation barriers are in place in all operating Light Water Reactor plants designated by DOR Generic Implementation Activity B-45.

In a generic letter of February 23, 1980, the NRC requested all licensees to identify the following valve configurations which may exist in any of their plant systems communicating with the PCS: 1) two check valves in series or 2) two check valves in series with a motor-operated valve (MOV).

For plants in which valve configurations of concern are found to exist, licensees were further requested to indicate: 1) whether, to ensure integrity of the various pressure isolation check valves, continuous surveillance or periodic testing was currently being conducted, 2) whether any check valves of concern were known to lack integrity, and 3) whether plant procedures should be revised or plant modifications be made to increase reliability.

Franklin Research Center (FRC) was requested by the NRC to provide technical assistance to NRC's B-45 activity by reviewing each licensee's submittal

against criteria provided by the NRC and by verifying the licensee's reported findings from plant system drawings. This report documents FRC's technical review.

## 2.0 CRITERIA

### 2.1 Identification Criteria

For a piping system to have a valve configuration of concern, the following five items must be fulfilled:

1) The high-pressure system must be connected to the Primary Coolant System;

2) there must be a high-pressure/low-pressure interface present in the line;

3) this same piping must eventually lead outside containment;

4) the line must have one of the valve configurations shown in Figure 1; and

5) the pipe line must have a diameter greater than 1 inch.

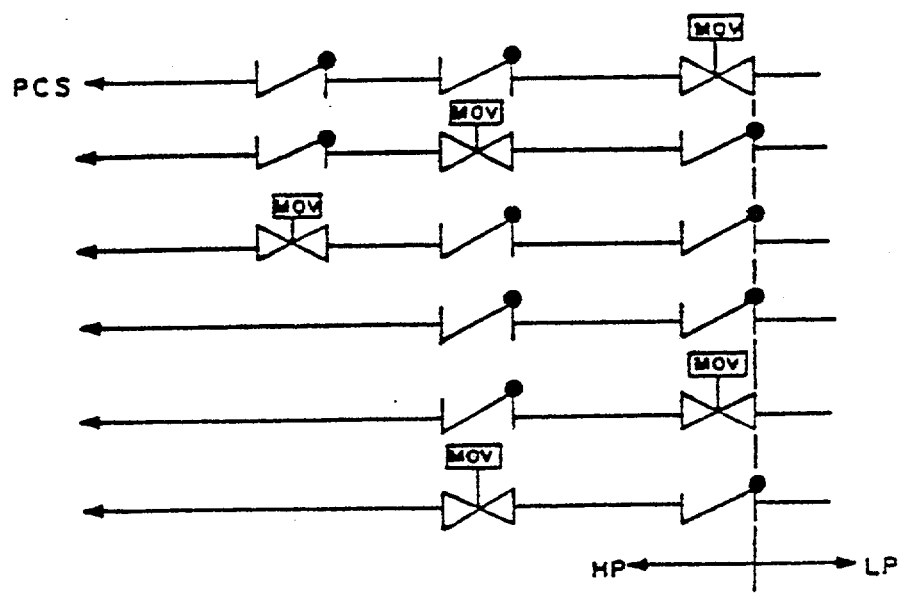


Figure 1. Valve Configurations Designated by the NRC To Be Included in This Technical Evaluation

## 2.2 Periodic Testing Criteria

For licensees whose plants have valve configurations of concern and choose to institute periodic valve leakage testing, the NRC has established criteria for frequency of testing, test conditions, and acceptable leakage rates. These criteria may be summarized as follows:

### 2.2.1 Frequency of Testing

Periodic hydrostatic leakage testing* on each check valve shall be accomplished every time the plant is placed in the cold shutdown condition for refueling, each time the plant is placed in a cold shutdown condition for 72 hours if testing has not been accomplished in the preceding 9 months, each time any check valve may have moved from the fully closed position (i.e., any time the differen- tial pressure across the valve is less than 100 psig), and prior to returning the valve to service after maintenance, repair, or replacement work is performed.

### 2.2.2 Hydrostatic Pressure Criteria

Leakage tests involving pressure differentials lower than function pressure differentials are permitted in those types of valves in which service pressure will tend to diminish the overall leakage channel opening, as by pressing the disk into or onto the seat with greater force. Gate valves, check valves, and globe-type valves, having function pressure differential applied over the seat, are examples of valve applications satisfying this requirement. When leakage tests are made in such cases using pressures lower than function maximum pressure differential, the observed leakage shall be adjusted to function maximum pressure differential value. This adjustment shall be made by calculation appropriate to the test media and the ratio between test and function pressure differential, assuming leakage to be directly proportional to the pressure differential to the one-half power.

### 2.2.3 Acceptable Leakage Rates:

- Leakage rates less than or equal to 1.0 gpm are considered acceptable.
- Leakage rates greater than 1.0 gpm but less than or equal to 5.0 gpm are considered acceptable if the latest measured rate has not exceeded the rate determined by the previous test by an amount

*To satisfy ALARA requirements, leakage may be measured indirectly (as from the performance of pressure indicators) if accomplished in accordance with approved procedures and supported by computations showing that the method is capable of demonstrating valve compliance with the leakage criteria.

that reduces the margin between measured leakage rate and the maximum permissible rate of 5.0 gpm by 50% or greater.

- Leakage rates greater than 1.0 gpm but less than or equal to 5.0 gpm are considered unacceptable if the latest measured rate exceeded the rate determined by the previous test by an amount that reduces the margin between measured leakage rate and the maximum permissible rate of 5.0 gpm by 50% or greater.
- Leakage rates greater than 5.0 gpm are considered unacceptable.

## 3.0 TECHNICAL EVALUATION

### 3.1 Licensee's Response to the Generic Letter

In response to the NRC's generic letter [Ref. 1], the Virginia Electric & Power Company (VEP) stated [Ref. 2] that, "With regard to Surry Power Station, Units 1 and 2, information concerning periodic testing to insure the integrity of primary coolant pressure boundary isolation check valves was forwarded in our letter Serial No. 030/121779, dated February 7, 1980, addressed to the attention of Mr. A. Schwencer. Our letter was in response to Mr. Schwencer's letter of December 17, 1979, concerning this subject."

In the December 17, 1979 letter, the ISI testing procedure for four check valves of a concerned configuration in the Low-Head Safety Injection System was described by VEP as follows:

"The check valves in question (SI-79, 82, 85, 241, 242, 243) will be tested, utilizing previously approved ISI acoustical monitoring techniques, to verify proper operation. However, the existing system design does not provide the capability for leak testing the valves. A design change request has been initiated to install leakage monitoring connections on the appropriate lines. A thorough review of the safety implications of the request is underway. Unless otherwise determined by review, leak testing will be performed utilizing the system developed in the design package."

It is FRC's understanding that, with VEP's concurrence, the NRC will direct VEP to change its Plant Technical Specifications as necessary to ensure that periodic leakage testing (or equivalent testing) is conducted in accordance with the criteria of Section 2.2.

## 3.2 FRC Review of Licensee's Response

FRC has reviewed the licensee's response against the plant-specific Piping and Instrumentation Diagrams (P&IDs) [Ref. 3] that might have the valve configurations of concern.

FRC has also reviewed the efficacy of instituting periodic testing for the check valves involved in this particular application with respect to the reduction of the probability of an intersystem LOCA in the Low-Head Safety Injection System pipe lines.

In its review of the P&IDs [Ref. 3] for Surry Units 1 and 2, FRC found the following piping system to be of concern:

> The Low-Head Safety Injection System (LHSIS) is connected to the cold-leg side of each of the three Primary Coolant System loops. Each cold-leg branch of the LHSIS has two check valves in a series configuration of concern with all three branches leading to a single motor-operated valve (MOV).
>
> The high-pressure/low-pressure interface is on the upstream side of this single MOV. These valves of the LHSIS are listed below for Surry Units 1 and 2:

Low-Head Safety Injection System

<u>Loop 1, cold leg</u>

high-pressure check valve, SI-79
high-pressure check valve, SI-241
high-pressure common MOV, 890C, normally open (n.o.)

<u>Loop 2, cold leg</u>

high-pressure check valve, SI-82
high-pressure check valve, SI-242
high-pressure common MOV, 890C, n.o.

<u>Loop 3, cold leg</u>

high-pressure check valve, SI-85
high-pressure check valve, SI-243
high-pressure common MOV, 890C, n.o.

In accordance with the criteria of Section 2.0, FRC found no other valve configurations of concern existing in this plant. These findings confirm the licensee's response [Ref. 2].

FRC reviewed the effectiveness of instituting periodic leakage testing of the check valves in these lines as a means of reducing the probability of an intersystem LOCA occurring. FRC found that introducing a program of check valve leakage testing in accordance with the criteria summarized in Section 2.0 will be an effective measure in substantially reducing the probability of an intersystem LOCA occurring in these lines and a means of increasing the probability that these lines will be able to perform their safety-related functions. It is also a step toward achieving a corresponding reduction in the plant probability of an intersystem LOCA in Surry Power Station, Units 1 and 2.

## 4.0 CONCLUSION

Surry Units 1 and 2, have been determined to have valves in one of the configurations of concern in all three of the cold-leg branches of each Low-Head Safety Injection System.

If VEP modifies the Plant Technical Specification for Surry Units 1 and 2 to incorporate periodic testing (as delineated in Section 2.2) for the check valves itemized in Table 1.0, then FRC considers this an acceptable means of achieving plant compliance with the NRC staff objectives of Reference 1.

Table 1.0

Primary Coolant System Pressure Isolation Valves

| System | Check Valve No. | Allowable Leakage* |
|---|---|---|
| Low-Head Safety Injection | | |
| Loop 1, cold leg | SI-79<br>SI-241 | |
| Loop 2, cold leg | SI-82<br>SI-242 | |

*To be provided by licensee at a future date in accordance with Section 2.2.3.

| | |
|---|---|
| Loop 3, cold leg | SI-85<br>SI-243 |

## 5.0 REFERENCES


[1]. Generic NRC letter, dated 2/23/80, from Mr. D. G. Eisenhut, Department of Operating Reactors (DOR), to Mr. C. M. Stallings, Viginia Electric & Power Company (VEP).

[2]. Virginia Electric & Power Company's response to NRC's letter, dated 3/14/80, from Mr. C. M. Stallings (VEP) to Mr. D. G. Eisenhut (DOR).

[3]. List of examined P&IDs:

Stone & Webster drawings:

11548-FM-82A

11548-FM-86A

11548-FM-86B

11548-FM-87A

11548-FM-88A

11548-FM-88B

11548-FM-88C

11548-FM-89A

11548-FM-89B

# TECHNICAL SPECIFICATIONS CHANGES

| Remove Pages | Add Pages |
|---|---|
| 3.1-13a | 3.1-13a |
| 4.1-9a | 4.1-9a |

8104270237

6. If the primary-to-secondary leakage through all steam generators not isolated from the Reactor Coolant System exceeds 1 gpm total and 500 gallons per day through any one steam generator not isolated from the Reactor Coolant System, reduce the leakage rate to within limits within 4 hours or be in hot shutdown within the next 6 hours and in cold shutdown within the following 30 hours.

7. a. Prior to going critical all primary coolant system pressure isolation valves listed below shall be functional as a pressure isolation device, except as specified in 3.1.C.7.b. Valve leakage shall not exceed the amounts indicated.

| | Unit 1 | Unit 2 | Max. Allowable Leakage (see note (a) below) |
|---|---|---|---|
| Loop A, Cold Leg | 1-SI-79, 1-SI-241 | 2-SI-79, 2-SI-241 | ≤5.0 gpm for each valve |
| Loop B, Cold Leg | 1-SI-82, 1-SI-242 | 2-SI-82, 2-SI-242 | |
| Loop C, Cold Leg | 1-SI-85, 1-SI-243 | 2-SI-85, 2-SI-243 | |

b. If Specification 3.1.C.7.a cannot be met, an orderly shutdown shall be initiated and the reactor shall be in hot shutdown within 6 hours and in the cold shutdown condition within the following 30 hours.

Notes

(a) 1. Leakage rates less than or equal to 1.0 gpm are considered acceptable.

2. Leakage rates greater than 1.0 gpm but less than or equal to 5.0 gpm are considered acceptable if the latest measured rate has not exceeded the rate determined by the previous test by an amount that reduces the margin between measured leakage rate and the maximum permissible rate of 5.0 gpm by 50% or greater.

3. Leakage rates greater than 1.0 gpm but less than or equal to 5.0 gpm are considered unacceptable if the latest measured rate exceeded the rate determined by the previous test by an amount that reduces the margin between measured leakage rate and the maximum permissible rate of 5.0 gpm by 50% or greater.

4. Leakage rates greater than 5.0 gpm are considered unacceptable.

TABLE 4.1.2A (CONTINUED)

| DESCRIPTION | TEST | FREQUENCY | FSAR SECTION REFERENCE |
|---|---|---|---|
| 16. Reactor Vessel Overpressure Mitigating System (except backup air supply) | Functional & Setpoint | Prior to decreasing RCS temperature below 350°F and monthly while the RCS is <350°F and the Reactor Vessel Head is bolted. | None |
| 17. Reactor Vessel Overpressure Mitigating System Backup Air Supply | Setpoint | Refueling | None |
| 18. Primary Coolant System Pressure Isolation Valves | Functional | 1. Periodic leakage[a] on each valve listed in Specification 3.1.C.7a shall be accomplished prior to entering power operation condition after every time the plant is placed in the cold shutdown condition for refueling, after each time the plant is placed in a cold shutdown condition for 72 hours if testing has not been accomplished in the preceding 9 months, and prior to returning the valve to service after maintenance, repair or replacement work is performed. | |

(a) To satisfy ALARA requirements, leakage may be measured indirectly (as from the performance of pressure indicators) if accomplished in accordance with approved procedures and supported by computations showing that the method is capable of demonstrating valve compliance with the leakage criteria.

(b) Minimum differential test pressure shall not be below 150 psid.