TOTAL FW
16

MATERIAL 150. SHT. No. 1794

QSL	ITEM	QTY.	SIZE	DESCRIPTION	TAG No. OR ASTM MAT'L.	HEAT NO.
01	1	1	1/2"	2000# BRONZE OR BRASS THREADED GLOBE VAL.	Y0506236	
01	2	AS REQ'D	1/2"	PIPE (SCH 80, SMLS) C.S.	A-106 GR. B	
04	2	2	1/2"	2000# C.S. SW GATE VALVE	Y0506236	
04	3	2	1/2"	3000# C.S THRD CAP	A-181 GR. I OR II	
04	4	1	6"	B/W DIAPH. CONTROL VA. S.S.)	WCR-905	
01	10	AS REQ'D	1/2"	PIPE (SCH 80, SMLS) C.S.	A-106 GR. B	
04	11	AS REQ'D	1/2"	PIPE (SCH 40S) SMLS S.S.	A-312 GR TP-304	
04	12	1	6"	B.W. DIAPH. CONTROL VA. S.S	WCR-904	
01	13	1	1/2"	3000# C.S. HALF CPLG.	A-181 GR I OR II	
	14	1	1/2"	600# C.S. SW. GATE VALVE	Y-0506236	
	15	1	1/2"	3000# C.S THRD CAP	A-181 GR I OR II	

REV.	DATE	DR CHK	DESCRIPTION	REMARKS
1	12/8/71	SS GN	RELEASED PIPING AT CPN. ADDED: NOTES 3, 4 & 5; ITEM 4; WELD PROCEDURE; P.O. #; TOTAL NO. OF FW. PER DWG 1-5497-B.	FIELD ACTION/FAB. REQ'D ACTION REQ'D.
2	7/14/75	RGN	REV'D.; ITEM #2 Y0506236 WAS CX0506236 REV'D BY A.E.P.	NO ACTION REQ'D
3	1-20-76	DR	REVISED BY A.E.P. DESIGN PER REC-DC-12-G71 TO REFLECT AS BUILT WHEN CHECK VALVE WAS ADDED.	NO ACTION REQ'D
4	2/2/78	H.B. LB	PER RFC #12-1430 DELETE ITEM 8 & ADDED ITEM 6 7 8 9 10 SEE DETAIL "D"	FIELD ACTION REQ'D.
5	1/13/82	A.G. DR	PER RFC-DC-12-2649. ADDED PIPE SPEC G-14. DIM'S PCMK. L-8, L9, 7B-8, WELD BOX. NOTES 6 & 7. FIELD WELDS. FW 17 TO 24 FSW 25 TO 28. ITEMS 11 TO 15, DELETED ITEMS 6 TO 10 FROM B/M REVISED ITEM 4 IN B/M. MODIFIED 1-NSW-37-6	FIELD ACTION REQ'D.

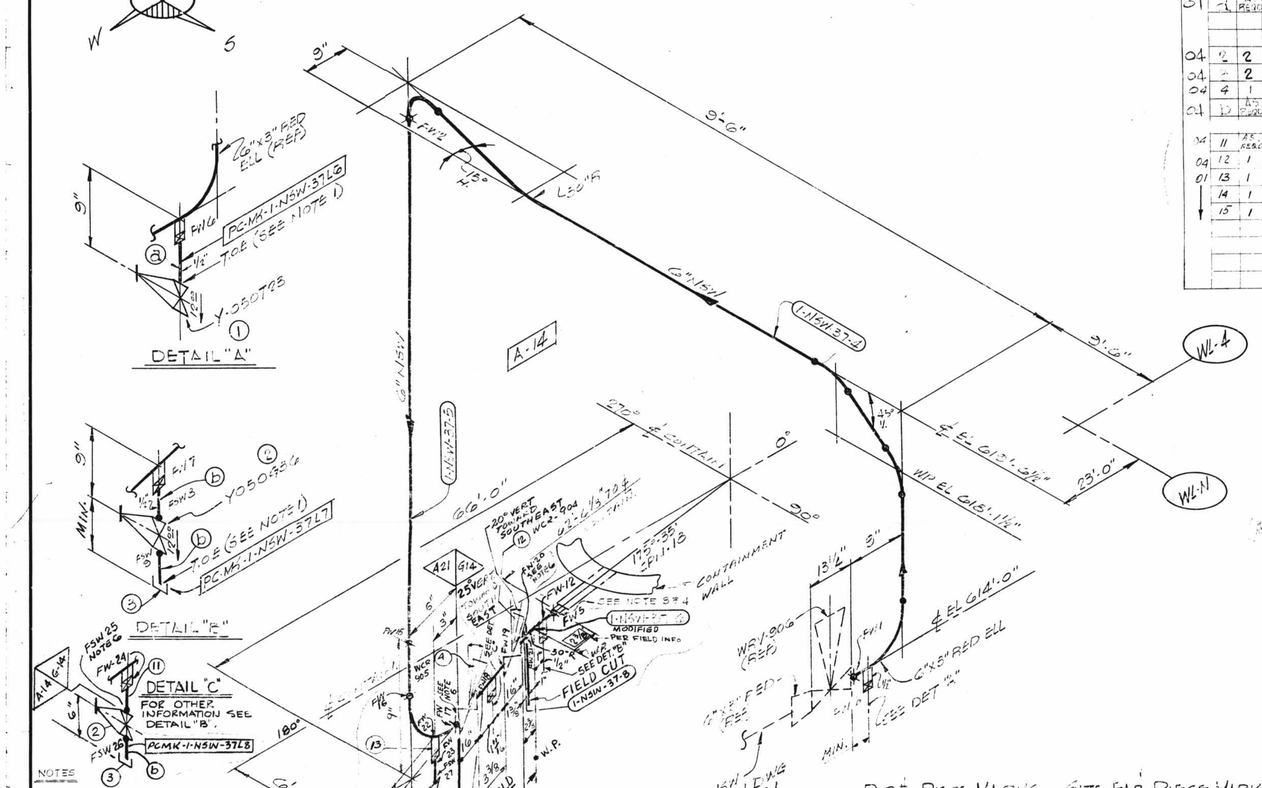

NOTES

1. USE CRANE 425-A COMPOUND ON ALL THREADED CONNE.
2. BUTTWELDS = RT-100% TESTING
   SOCKET WELDS = PT-100% TESTING
3. FABRICATOR TO MAKE THIS END OF SPOOL 6" LONGER WITH PLAIN END TO FACILITATE [illegible]
4. FW'S [illegible] ARE TO BE MADE AFTER PIPE IS PRE-ALIGNED [illegible] TO FIT AS BUILT DIM'S
5. CARB. STL. 2 & UNDER CS-G CARB. STL 2 1/2 & UP) CS-H OR CS-G
6. PROVIDE BI-METALLIC WELDS (STAINLESS STEEL-CARBON STEEL)
7. REMOVE BONNET ASSEMBLY BEFORE WELDING VALVE BODY TO PIPE LINE

TOTAL FW 12	FOR REV. 5 ONLY	
SIZE	QUAN	FW
6"	1'	5
1/2"	1'	7

P.O.# PIECE MARKS SITE FAB PIECE MARKS

506 1-NSW-37-4, -5, -6, -7, -8

1-NSW-37 L6, L7, L8, L9

NOTE DESIGNS

G-14 DESIGN SPEC. DCCPM 1096GN
HANGER SEISMIC CLASS I
TEST REQUIREMENTS QL 4
WELD PROCEDURE
QSL 04 TESTING SEE NOTE 3

FABRICATOR NOTE: FABRICATION MUST CONFORM TO LATEST A.E.P. ARRGT. DWGS.

LABOR COST CONTROL	
USE ONLY WITH	
PIPE SIZE	
SCHEDULE	
TYPE	
ISO START DATE	
ISO FINISH DATE	
WORK OPERATION	LINE ITEM NUMBER
HANGER INST.	
ERECT	
WELD	
RADIO-G – X-RAY	
STRESS RELIEVE	
MISC. WORK	

LABOR COST CONTROL	
USE ONLY WITH	
PIPE SIZE	
SCHEDULE	
TYPE	
ISO START DATE	
ISO FINISH DATE	
WORK OPERATION	LINE ITEM NUMBER
HANGER INST.	
ERECT	
WELD	
RADIO-G – X-RAY	
STRESS RELIEVE	
MISC. WORK	

A-14 DESIGN SPEC. DCCPM 1096GN
HANGER SEISMIC CLASS
TEST REQUIREMENTS QL 4
WELD PROCEDURE SEE NOTE 5
QSL 04 TESTING SEE NOTE 3

A-21 DESIGN SPEC. DCCPM 1096GN
HANGER SEISMIC CLASS
TEST REQUIREMENTS QL 1
WELD PROCEDURE SEE NOTE 5
QSL 01 TESTING N/A

DESIGN SPEC	SEE DESIGN
TEST REQUIREMENTS	CODE
MATERIAL CLASS	STAMP

PIPE												
A-53	A-106			A-376		A-312						
	GR. B					GR TP 304						
STD.	XY	XXY	10	20	30	40	60	80	100	120	140	160
SMLS	WLDD											

FITTINGS		
A-105	A-234	A-182
A-403	A-181	

TESTING			
N.D.T. SEE DESIGN CODE STAMP			
M.T.	P.T.	R.T.	U.T.
PRESSURE TEST			
MEDIUM	PRESS.	DURATION	

ADDITIONAL

D-72B

POUR/ZONE No. A-14
REQUIRED COMPLETION DATE
FABRICATED BY TIPECO

FLOW DIAGRAM 1-5114A
O.S.L. SEE DESIGN
WELD PROCEDURE CODE STAMP

REVISION RECORD		
NO.	DATE	DESCRIPTION

1-NSW-37 (sheet 2 of 2)
Lower Containment Ventilation
Unit 2 Supply Line

LIVSEY & COMPANY, INC.
DONALD C. COOK NUCLEAR PLANT

DWN. WJP	DATE 3-16-71	AUXILIARY BLDG.	
CKD. GN	DATE 9-23-71	DWG. NO. 1-NSW-37 SHT 2 OF 2	REV 5
ISSUED			
REF. DWG. 1-5497			