TOTAL FW

MATERIAL 150. SHT. NO 1297

| QSL | ITEM | QTY. | SIZE | DESCRIPTION | TAG No. OR ASTM MAT'L. | HEAT NO. |
|---|---|---|---|---|---|---|
| 01 | 1 | 4 | 1" | 600# CS SW GLOBE VALVE | Y100T36 | |
| | 2 | 1 | 1/2" | 200# BRONZE OR BRASS THRD GLOBE VA | Y050T23 | |
| | 3 | 2 | 1" | 3000# CS SW PLUG | A-181 GR I OR II | |
| | 4 | 8 | - | 3/4"ø x 5 1/2" HEX MACHINE BOLT | A-307 GR B | |
| | 5 | 16 | 3/4" | HEAVY HEX NUT | ↓ | |
| | 6 | 8 | - | 3/4"ø x 3 1/2" HEX MACHINE BOLT | | |
| | 7 | 2 | 6" | 1/16" THK GASKET COMP ASBESTOS RUBBER BONED FULL FACE | | |
| | 8 | 1 | 6" | 125# BUTTERFLY WAFER VA, CI | 12FW06RS | |
| | 9 | 1 | 3" | REGULATING VALVE | WRV-906 | |
| | 10 | 4 | 1" | 3000# CS SW 90° ELL | A-181 GR I OR II | |
| | 11 | 2 | 1" | 3000# CS SW HALF CPLG | ↓ | |
| | a | AS REQD | 1" | PIPE (SCH. 80 SMLS) CS | A106 GR. B | |
| | b | " | 1/2" | PIPE (SCH. 80 SMLS) CS. | " | |

| REV. | DATE | DR CHK | DESCRIPTION | REMARKS |
|---|---|---|---|---|
| 1 | 5/2/72 | SG. GN | ADDED: ITEMS 4 THRU 11; WFS-906 & RELATED PIPING; BOX FOR TOTAL NO. OF FW'S; NOTE 3. REVISED: ITEMS 1 & 3; PIPING FOR WFA-906. DELETED NOTE 1. PER AEP DWG 1-5497-4 | FIELD ACTION REQD |

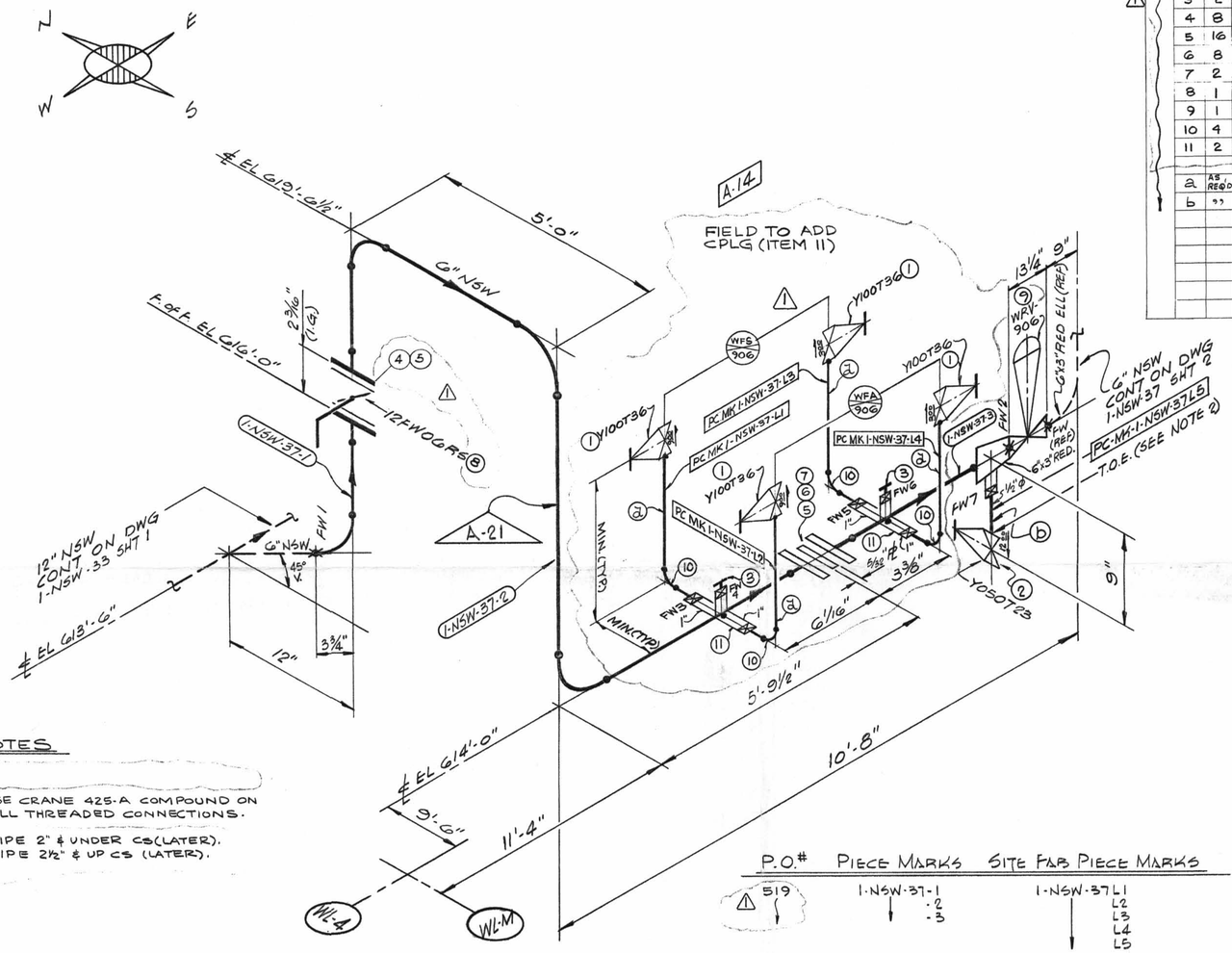


## NOTES

1. 
2. USE CRANE 425-A COMPOUND ON ALL THREADED CONNECTIONS.
3. PIPE 2" & UNDER CS(LATER). PIPE 2 1/2" & UP CS (LATER).

| P.O.# | PIECE MARKS | SITE FAB PIECE MARKS |
|---|---|---|
| 519 | 1-NSW-37-1 | 1-NSW-37 L1 |
| | :2 | L2 |
| | :3 | L3 |
| | | L4 |
| | | L5 |

N.P.S. DESIGNS

FABRICATOR NOTE: FABRICATION MUST CONFORM TO LATEST A.E.P. ARRGT. DWGS.

| LABOR COST CONTROL | |
|---|---|
| USE ONLY WITH | |
| PIPE SIZE | |
| SCHEDULE | |
| TYPE | |
| *ISO START DATE* | |
| *ISO FINISH DATE* | |
| WORK OPERATION | LINE ITEM NUMBER |
| HANGER INST. | |
| ERECT | |
| WELD | |
| RADIO-G – X-RAY | |
| STRESS RELIEVE | |
| MISC. WORK | |

| LABOR COST CONTROL | |
|---|---|
| USE ONLY WITH | |
| PIPE SIZE | |
| SCHEDULE | |
| TYPE | |
| *ISO START DATE* | |
| *ISO FINISH DATE* | |
| WORK OPERATION | LINE ITEM NUMBER |
| HANGER INST. | |
| ERECT | |
| WELD | |
| RADIO-G – X-RAY | |
| STRESS RELIEVE | |
| MISC. WORK | |

| SIZE | QUAN. | FW |
|---|---|---|
| 6" | 24'-0" | 1 |
| 3" | — | 1 |
| 1" | 3'-0" | 20 |
| 1/2" | 1'-0" | 1 |

| | |
|---|---|
| DESIGN SPEC. | DCCPM102QCS |
| HANGER SEISMIC CLASS | II |
| TEST REQUIREMENTS | QL1 |
| MATERIAL CLASS | A-21 SPEC 104 |

W.P. = WORKING POINT
T.O.E. = THREAD ONE END
T.B.E. = THREAD BOTH ENDS
B.O.E. = BEVEL ONE END
T.O.P. = TOP OF PIPE ELEV.
Q.S.L. = MATERIAL QUALITY REQUIREMENTS
T.L. = TRUE LENGTH

B.B.E. = BEVEL BOTH ENDS
P.O.E. = PLAIN ONE END
P.B.E. = PLAIN BOTH ENDS
S.O.E. = SHAPE ONE END
B.O.P. = BOTTOM OF PIPE ELEV.

FW = FIELD WELD
H = HORIZONTAL
V = VERTICAL
SW = SHOP WELD
FSW = FIFLD SHOP WELD

⊗ = FIELD WELD
O = AUTOMATIC SHOP WELD
⊗ = MANUAL SHOP WELD
⊗ = VERIFY DIMENSION IN FIELD

PIPE: A-53, A-106 GR B, A-376, A-312; STD., XY, XXY, 10, 20, 30, 40, 60, 80, 100, 120, 140, 160; SMLS, WLDD

FITTINGS: A-105, A-234, A-182; A-403, A-181

TESTING: N.D.T. N/A; M.T., P.T., R.T., U.T.; PRESSURE TEST; MED., PRESS., DURATION

ADDITIONAL

POUR/ZONE No. A-14
REQUIRED COMPLETION DATE
FABRICATED BY TUBESCO

FLOW DIAGRAM 1-2-5114A
O.S.L. 01
WELD PROCEDURE SEE NOTE 3

REVISION RECORD: NO. | DATE | DESCRIPTION

**1-NSW-37 (sheet 1 of 2)**
**Lower Containment Ventilation**
**Unit 2 Supply Line**

LIVSEY & COMPANY, INC.
DONALD C. COOK NUCLEAR PLANT

DWN. WJP DATE: 9-16-71
CKD. GN DATE: 9-23-71
ISSUED
REF. DWG. 1-5497-2

AUXILIARY BLDG
DWG. NO. 1-NSW-37 SHT 1 OF 2
REV. 1

D-72A