TOTAL FW 11	FOR REV. 4 ONLY	
SIZE	QUAN.	FW
3"	2'-0"	4
1/2"	1'-0"	7

TOTAL FW 14

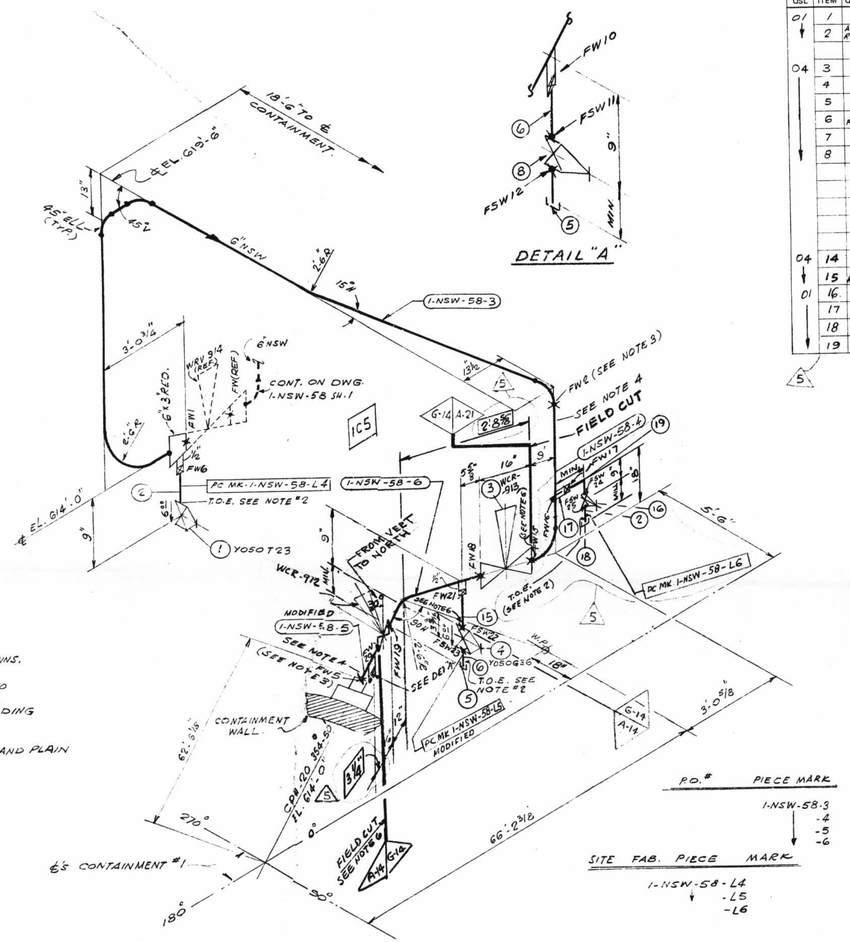

NOTES:

1. BUTTWELDS = RT-100% TESTING
   SOCKET WELDS = PT-100% TESTING
2. USE CRANE 425-A COMPOUND ON ALL THRD. CONNS.
3. FIELD WELDS REFERENCED TO THIS NOTE ARE TO BE MADE AFTER PIPE IS CUT, PRE-ALIGNED AND ENDS HAVE BEEN PREPARED FOR WELDING TO SUIT AS-BUILT CPN.
4. SPOOL TO BE FABRICATED WITH 6" EXTRA PIPE AND PLAIN END TO FACILITATE INSTALLATION.
5. WELD PROCEDURE AS FOLLOWS:
   G/S 2" & UNDER - CS-1 OR CS-G
   G/S 2½" & OVER - CS-1 OR CS-2
6. PROVIDE BI-METALLIC WELDS (STAINLESS STEEL-CARBON STEEL)
7. REMOVE BONNET ASSEMBLY BEFORE WELDING VALVE BODY TO PIPE LINE

MATERIAL ISO SH. No. 1857

QSL	ITEM	QTY.	SIZE	DESCRIPTION	TAG No. OR ASTM MAT'L.	HEAT NO.
01	1	1	½"	200# SCRD GLOBE VA. BRONZE OR BRASS	Y050T23	
	2	AS REQ'D	½"	PIPE (SCH. 80) SMLS C.S.	A-106 GR. B.	
04	3	1	6"	B/W DIAPH. CONTROL VA. S.S.	WCR-913	
	4	1	½"	600# S.W. GATE VA. C.S.	Y050G36	
	5	2	½"	3000# SCR'D. C.S. CAP	A-181 GR. I OR II	
	6	AS REQ'D	½"	PIPE (SCH. 80) SMLS. C.S.	A 106 GR B	
	7					
	8	1	½"	600# C.S. S.W. GLOBE VALVE	Y-050T36	
04	14	1	6"	B/W DIAPH. CONTROL VA. S.S.	WCR-912	
	15	AS REQ'D	½"	PIPE (SCH. 40S) SMLS SS	A-312 GR-TP. 304	
01	16	1	½"	600# S.W. GATE VALVE C.S.	Y-050G36	
	17	1	½"	3000# CS HALF CPLG.	A-181 GR I OR II	
	18	1	½"	3000# C.S. THR'D CAP		
	19	1	½"	3000# S.W. 90° ELL. C.S.		

REV	DATE	DR	DESCRIPTION	REMARKS
1	7/19/75	P.G. A	REV'D.: ITEM #4 Y050G36 WAS CY050G36-REV'D. BY AEP.	NO ACTION REQ'D.
2	1-20-76	H.M.	REVISED BY A.E.P. DESIGN PER RFC-DC-12-671 TO REFLECT AS BUILT WHEN CHECK VALVE WAS ADDED	NO ACTION REQ'D.
3	2/8/78	H.B. LB	PER RFC #12-1430 DELETE ITEM 7 & ADDED ITEM 9 10 11 12 13. SEE DETAIL "B"	FIELD ACTION REQ'D.
4	1/13/82	A.G. DR.	PER RFC-DC-12-2549 ADDED PIPE SPEC. G-14. DIM'S. PCMK 6&16 FIELD WELD BOX. NOTES 6&7. FW 15 THRU 21, FSW 22 THRU 25, ITEM NOS 14 & 18 TO B/M. DELETED ITEM NOS 8 THRU 13 IN B/M. REVISED ITEM 3 IN B/M. MODIFIED PCMK'S 5 & 6.	FIELD ACTION REQ'D.
5	1/28/82	E.G. JM	PER RFC-DC-12-2549 BOXED DIMENSIONS INDICATE FIELD INFO. RELOCATED TEST CONN. & ADDED ITEM 19 TO B/M. PER FIELD	FIELD ACTION REQ'D.

LABOR COST CONTROL	
USE ONLY WITH	
PIPE SIZE	
SCHEDULE	
TYPE	
ISO START DATE	
ISO FINISH DATE	
WORK OPERATION	LINE ITEM NUMBER
HANGER INST.	
ERECT	
WELD	
RADIO-G – X-RAY	
STRESS RELIEVE	
MISC. WORK	

LABOR COST CONTROL	
USE ONLY WITH	
PIPE SIZE	
SCHEDULE	
TYPE	
ISO START DATE	
ISO FINISH DATE	
WORK OPERATION	LINE ITEM NUMBER
HANGER INST.	
ERECT	
WELD	
RADIO-G – X-RAY	
STRESS RELIEVE	
MISC. WORK	

P.O.#	PIECE MARK
	1-NSW-58-3
	-4
	-5
	-6

SITE FAB. PIECE MARK

1-NSW-58-L4
-L5
-L6

G-14 DESIGN SPEC. DCCPM 109 QCN
HANGER SEISMIC CLASS I
TEST REQUIREMENTS QL 4
WELD PROCEDURE
QSL 04 TESTING SEE NOTE 1

A-14 DESIGN SPEC. DCCPM 103 QCN
HANGER SEISMIC CLASS I
TEST REQUIREMENTS QL- 4
WELD PROCEDURE SEE NOTE 5
QSL- 04 TESTING SEE NOTE #1

A-21 DESIGN SPEC. DCCPM 102 QCS
HANGER SEISMIC CLASS II
TEST REQUIREMENTS QL- N/A
WELD PROCEDURE SEE NOTE 5
QSL- 01 TESTING N/A.

N.P.S. DESIGNS

FABRICATOR NOTE: FABRICATION MUST CONFORM TO LATEST A.E.P. ARRGT. DWGS. 1-54971

DESIGN SPEC.	SEE
HANGER SEISMIC CLASS	DESIGN
TEST REQUIREMENTS	CODE
MATERIAL CLASS	STAMP.

R.P. = BORING POINT
T.O.E. = THREAD ONLY END
B.O.E. = BEVEL BOTH ENDS
B.O.E. = BEVEL ONE END
T.O.P. = TOP OF PIPE ELEV.
Q.S.L. = MATERIAL QUALITY REQUIREMENTS
T.L. = TRUE LENGTH

B.B.E. = BEVEL BOTH ENDS
P.O.E. = PLAIN ONE END
P.B.E. = PLAIN BOTH ENDS
S.O.E. = SHAPE ONE END
B.O.P. = BOTTOM OF PIPE ELEV.

FW = FIELD WELD
H = HORIZONTAL
V = VERTICAL
SW = SHOP WELD
FSW = FIELD SHOP WELD
FF = TO FACE OF FLANGE

R = FIELD WELD
O = AUTOMATIC SHOP WELD
M = MANUAL SHOP WELD
E = VERIFY DIMENSION IN FIELD

PIPE												
A-53	A-106 GR. B		A-376	A-312 GR-TP-304								
STD.	XY	XXY	10	20	30	40	60	80	100	120	140	160
SMLS	WLDD						X					

FITTINGS		
A-105	A-234	A-182
A-403	A-181	

TESTING			
N.D.T. SEE DESIGN CODE STAMP			
M.T.	P.T.	R.T.	U.T.
PRESSURE TEST			
MED.	PRESS.	DURATION	

ADDITIONAL

D-07B

POUR/ZONE No. 1C5
REQUIRED COMPLETION DATE
FABRICATED BY TUBECO

FLOW DIAGRAM 1-5114A
Q.S.L. SEE DESIGN
WELD PROCEDURE CODE STAMP.

REVISION RECORD		
NO.	DATE	DESCRIPTION

1NSW-58 (sheet 2 of 3)
Lower Containment Ventilation
Unit 4 Supply Line

LIVSEY & COMPANY, INC.
DONALD C. COOK NUCLEAR PLANT

DWN. S.G. DATE 11-8-71
CKD. DATE 1/4/74
ISSUED
REF. DWG. 1-54971A

CONTAIN. VICINITY
DWG. NO. 1-NSW-58 SH. 2 OF 3
REV. 5