DWG. NO. OP-2-5114A

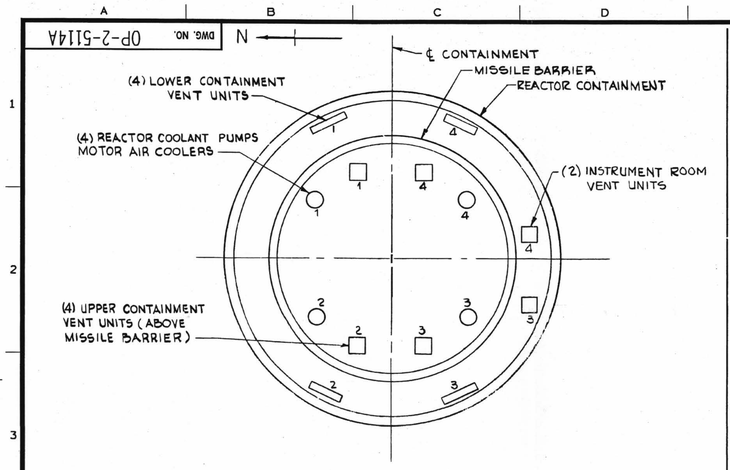

LOCATION PLAN

UNIQUE VALVE NUMBERS (UVN) AT LOWER CONTAINMENT VENTILATION UNITS

BANK NO. 1		BANK NO. 2		BANK NO. 3	
SYMBOL	UVN	SYMBOL	UVN	SYMBOL	UVN
1	NSW 213-2 NSW 213-1 NSW 213-3 NSW 213-4	4	NSW 216-2 NSW 216-1 NSW 216-3 NSW 216-4	7	NSW 219-2 NSW 219-1 NSW 219-3 NSW 219-4
2	NSW 214-2 NSW 214-1 NSW 214-3 NSW 214-4	5	NSW 217-2 NSW 217-1 NSW 217-3 NSW 217-4	8	NSW 220-2 NSW 220-1 NSW 220-3 NSW 220-4
3	NSW 215-2 NSW 215-1 NSW 215-3 NSW 215-4	6	NSW 218-2 NSW 218-1 NSW 218-3 NSW 218-4	9	NSW 221-2 NSW 221-1 NSW 221-3 NSW 221-4
16	NSW 228-2 NSW 228-1 NSW 228-3 NSW 228-4	13	NSW 225-2 NSW 225-1 NSW 225-3 NSW 225-4	10	NSW 222-2 NSW 222-1 NSW 222-3 NSW 222-4
17	NSW 229-2 NSW 229-1 NSW 229-3 NSW 229-4	14	NSW 226-2 NSW 226-1 NSW 226-3 NSW 226-4	11	NSW 223-2 NSW 223-1 NSW 223-3 NSW 223-4
18	NSW 230-2 NSW 230-1 NSW 230-3 NSW 230-4	15	NSW 227-2 NSW 227-1 NSW 227-3 NSW 227-4	12	NSW 224-2 NSW 224-1 NSW 224-3 NSW 224-4
INLET 19 DRAIN	NSW 545-2 NSW 545-1 NSW 545-3 NSW 545-4	INLET 20 DRAIN	NSW 546-2 NSW 546-1 NSW 546-3 NSW 546-4	INLET 21 DRAIN	NSW 547-2 NSW 547-1 NSW 547-3 NSW 547-4
OUTLET 22 DRAIN	NSW 542-2 NSW 542-1 NSW 542-3 NSW 542-4	OUTLET 23 DRAIN	NSW 543-2 NSW 543-1 NSW 543-3 NSW 543-4	OUTLET 24 DRAIN	NSW 544-2 NSW 544-1 NSW 544-3 NSW 544-4

CHART TO COORDINATE SUPPLY AND RETURN LINES TO EQUIPMENT NOT SHOWN

SYMBOL	EQUIP. NUMBER	EQUIPMENT
A	1	TO AND FROM VENTILATION UNITS LOWER CONTAINMENT
B	3	
C	4	
D	3	TO AND FROM VENTILATION UNITS INSTRUMENTATION ROOM
E	1	TO AND FROM VENTILATION UNITS IN UPPER CONTAINMENT
F	2	TO AND FROM VENTILATION UNITS UPPER CONTAINMENT
G	3	TO AND FROM VENTILATION UNITS IN UPPER CONTAINMENT
H	2	TO AND FROM REACTOR COOLANT PUMPS, MOTOR AIR COOLER
J	3	
K	4	

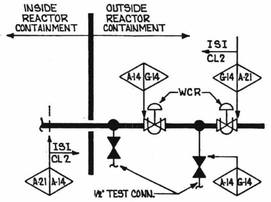

SKETCH "D-9"
(CHANGE IN PIPE CLASS - TYPICAL ON ALL SUPPLY & RETURN LINES)

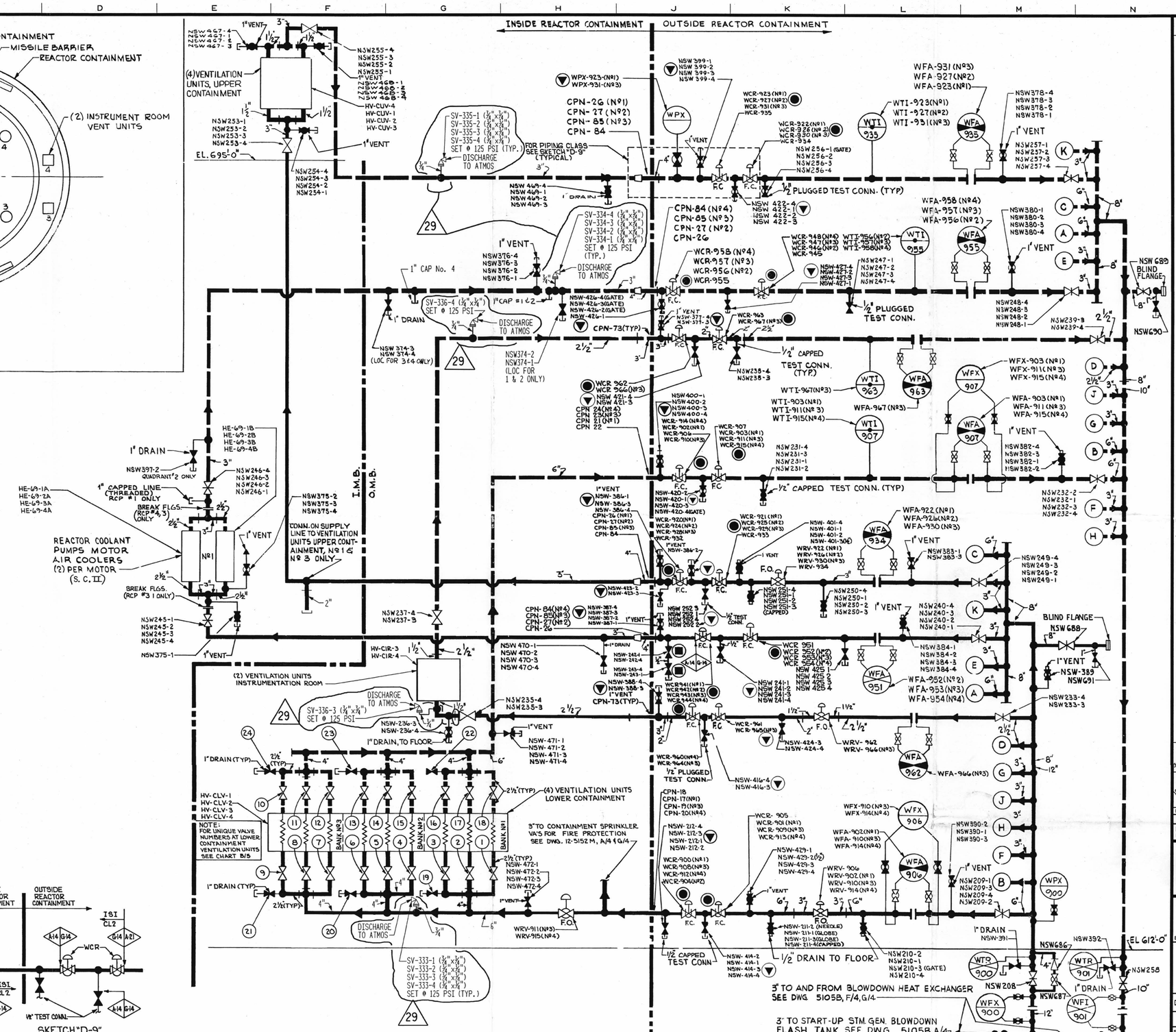

GENERAL NOTES

- UNLESS OTHERWISE NOTED ON THIS DRAWING:
- REFER TO DRAWING 12-5104 FOR "HAND OPERATED VALVE IDENTIFICATION NUMBERS" NOTES.
- THE UNIT PREFIX DESIGNATION FOR EACH COMPONENT IDENTIFICATION NO. IS " 2 ".

LEGEND
- SUPPLY PIPING
- RETURN PIPING
- AUXILIARY PIPING

FOR VALVE, INSTRUMENT, SAMPLING, PIPE MATERIAL AND OTHER SYMBOLS NOT EXPLAINED ON THIS DWG., AND FOR MARK NUMBER CODES, SEE DWGS 12-5103, 5104.

A. ALL EQUIPMENT SEISMIC CLASS II EXCEPT AS NOTED.
B. FOR CODE CLASS 2 INST CONNS. THE 151 BOUNDARY EXTENDS TO & INCLUDES THE FIRST ROOT VALVE.
C. FOR CODE CLASS 2 VENTS & DRAINS THE 151 BOUNDARY EXTENDS TO & INCLUDES THE FIRST NORMALLY CLOSED VALVE.

DATE	NO.	DESCRIPTION	APPD.
5-27-99	29	INCORPORATED PER PARTIAL RELEASE OF 2-DCP-449 REV. 0. ISSUED FOR RECORD. GM/RMM AT/JB KF/DD	GG
10-21-99	28	REVISED NOTE FOR SYMBOL E AND G AT A/8-9 PER C/R 99-15917, DCR 99-0127. GR/SK 10-15-99	JMM

REVISIONS

FILENAME: op-2-5114a.029
(raster file): op-2-5114a 29.cit

"THIS DRAWING IS THE PROPERTY OF THE AMERICAN ELECTRIC POWER SERVICE CORP. AND IS LOANED UPON CONDITION THAT IT IS NOT TO BE REPRODUCED OR COPIED, IN WHOLE OR IN PART, OR USED FOR FURNISHING INFORMATION TO ANY PERSON WITHOUT THE WRITTEN CONSENT OF THE AEP SERVICE CORP., OR FOR ANY PURPOSE DETRIMENTAL TO THEIR INTEREST, AND IS TO BE RETURNED UPON REQUEST"

INDIANA MICHIGAN POWER COMPANY
DONALD C. COOK
NUCLEAR PLANT
BRIDGMAN MICHIGAN

FLOW DIAGRAM
NON-ESSENTIAL
SERVICE WATER

D-01

DWG. NO. OP-2-5114A-29

ARCH	ELEC	MECH	STR

SCALE: DRN:
DATE: CHK:

DESIGN ENGINEERING DIVISION:
REFER TO DRIG END ISSUE MICROFILM FOR SIGNATURES

AEP AMERICAN ELECTRIC POWER
AEP SERVICE CORP.
1 RIVERSIDE PLAZA
COLUMBUS, OH 43215

IGS0694

D-01