CP&L
A Progress Energy Company

John S. Keenan
Vice President
Brunswick Nuclear Plant

SEP 27 2001

10 CFR 50.90

SERIAL: BSEP 01-0112
TSC-2001-04

U. S. Nuclear Regulatory Commission
ATTN: Document Control Desk
Washington, DC 20555-0001

BRUNSWICK STEAM ELECTRIC PLANT, UNIT NOS. 1 AND 2
DOCKET NOS. 50-325 AND 50-324/LICENSE NOS. DPR-71 AND DPR-62
ADDITIONAL INFORMATION IN SUPPORT OF REQUEST FOR LICENSE AMENDMENTS TO ADOPT ALTERNATIVE RADIOLOGICAL SOURCE TERM
(NRC TAC NOS. MB2570 AND MB2571)

Ladies and Gentlemen:

On August 1, 2001 (Serial: BSEP 01-0063), Carolina Power & Light (CP&L) Company submitted a license amendment application to allow a full-scope implementation of an Alternative Radiological Source Term (AST) for the Brunswick Steam Electric Plant (BSEP), Units 1 and 2. This license amendment application makes use of a methodology, described in General Electric Nuclear Energy Topical Report NEDC-31858P-A, Revision 2, "BWROG Report for Increasing MSIV Leakage Rate Limits and Elimination of Leakage Control Systems," for evaluation of an alternate leakage treatment path from the main steam line isolation valves (MSIVs) to the main condenser. The NRC approved this methodology in a letter and Safety Evaluation dated March 3, 1999.

The August 1, 2001, letter indicated that CP&L would, by September 28, 2001, submit additional information regarding the seismic ruggedness of the proposed alternate leakage treatment path. The purpose of this letter is to submit the necessary information regarding the evaluation of the alternate leakage treatment path. The methodology described in NEDC-31858P-A is only being used to support the license amendment application to adopt an alternative radiological source term; CP&L is not requesting MSIV leakage increases or elimination of a MSIV leakage control system.

Enclosure 1 provides a description of the alternate leakage treatment pathway. The BSEP, Unit 1 Seismic Evaluation Report for the alternate leakage treatment path is provided in Enclosure 2.

Table 4-1 of the Seismic Evaluation Report identifies those BSEP, Unit 1 plant conditions that, based on the seismic verification walkdowns, do not meet the seismic verification review guidelines. The BSEP, Unit 1 modifications necessary to resolve the conditions

A001

P.O. Box 10429
Southport, NC 28461

T > 910.457.2496
F > 910.457.2803

identified in Table 4-1 will be completed during Unit 1 Refueling Outage 13 (i.e., designated as B114R1), scheduled to begin in March 2002.

The seismic verification walkdowns for BSEP, Unit 2 have not yet been performed. These BSEP, Unit 2 seismic verification walkdowns will be completed prior to or during Unit 2 Refueling Outage 15 (i.e., designated as B216R1). Due to similarity of design and construction, it is expected that the results of the Unit 2 seismic ruggedness evaluations will be similar to the Unit 1 results. The outliers identified for Unit 2 will be resolved by analysis and/or modifications during the B216R1 outage, scheduled to begin in March 2003.

Please refer any questions regarding this submittal to Mr. David C. DiCello, Manager - Regulatory Affairs, at (910) 457-2235.

Sincerely,

John S. Keenan

WRM/wrm

Enclosures:
1. Alternate Leakage Treatment Path
2. Seismic Evaluation Report, August 31, 2001

John S. Keenan, having been first duly sworn, did depose and say that the information contained herein is true and correct to the best of his information, knowledge and belief; and the sources of his information are officers, employees, and agents of Carolina Power & Light Company.

Dean S. Mason
Notary (Seal)

My commission expires: 8/29/04

cc (with enclosures):

U. S. Nuclear Regulatory Commission, Region II
ATTN: Dr. Bruce S. Mallett, Acting Regional Administrator
Sam Nunn Atlanta Federal Center
61 Forsyth Street, SW, Suite 23T85
Atlanta, GA 30303-8931

U. S. Nuclear Regulatory Commission
ATTN: Mr. Theodore A. Easlick, NRC Senior Resident Inspector
8470 River Road
Southport, NC 28461-8869

U. S. Nuclear Regulatory Commission
ATTN: Mr. Donnie J. Ashley (Mail Stop OWFN 8G9)
11555 Rockville Pike
Rockville, MD 20852-2738

Ms. Jo A. Sanford
Chair - North Carolina Utilities Commission
P.O. Box 29510
Raleigh, NC 27626-0510

Mr. Mel Fry
Director - Division of Radiation Protection
North Carolina Department of Environment and Natural Resources
3825 Barrett Drive
Raleigh, NC 27609-7221

ENCLOSURE 1

BRUNSWICK STEAM ELECTRIC PLANT, UNIT NOS. 1 AND 2
DOCKET NOS. 50-325 AND 50-324/LICENSE NOS. DPR-71 AND DPR-62
ADDITIONAL INFORMATION IN SUPPORT OF REQUEST FOR LICENSE AMENDMENTS TO ADOPT ALTERNATIVE RADIOLOGICAL SOURCE TERM
(NRC TAC NOS. MB2570 AND MB2571)

Alternate Leakage Treatment Path

Background

Regulatory Guide 1.183, Appendix A, provides assumptions, acceptable to the NRC, for evaluation of the radiological consequences of loss-of-coolant accidents (LOCAs) using Alternative Radiological Source Terms (ASTs). For Boiling Water Reactor (BWR) main steam line isolation valve (MSIV) leakage, Regulatory Guide 1.183 allows credit for a reduction in MSIV releases due to holdup and deposition in main steam piping downstream of the MSIVs and in the main condenser, including the treatment of air ejector effluent by offgas systems, if the components and piping systems used in the release path are capable of performing their safety function during and following a safe shutdown earthquake (SSE). Appendix A also states that an acceptable model for evaluating reduction of MSIV releases is provided in General Electric Topical Report NEDC-31858P-A, "BWROG Report for Increasing MSIV Leakage Limits and Elimination of Leakage Control Systems, September 1993."

This enclosure summarizes the Seismic Evaluation Report, prepared by ABS Consulting, which supports Carolina Power & Light (CP&L) Company's AST license amendment application for Brunswick Steam Electric Plant (BSEP), Units 1 and 2 submitted August 1, 2001 (Serial: BSEP 01-0063). A copy of the Seismic Evaluation Report is provided in Enclosure 2. The Seismic Evaluation Report concludes that the possibility of a failure of the Turbine Building, alternate leakage treatment (ALT) piping and appendages, and the main condensers is highly unlikely and that such a failure would be contrary to a large body of earthquake experience data.

BSEP, Units 1 and 2 do not have a Leakage Control system to route and contain secondary containment bypass leakage. As such, the isolated condenser will be the primary method for MSIV leakage treatment. The Boiling Water Reactor Owners' Group (BWROG) has evaluated several alternate MSIV leakage treatment methods and has recommended the isolated condenser for MSIV leakage treatment. This leakage treatment takes advantage of the large volume in the isolated main condenser to promote plate-out and hold-up of the release of any fission products potentially leaking from the closed MSIVs.

CP&L plans to use the main steam drain lines downstream of the outboard MSIVs to the isolated main condenser as the primary method for MSIV leakage treatment, as described in NEDC-31858P-A. The AST license amendment application is not requesting a change in MSIV

leakage rates. Other system steam drains, such as High Pressure Coolant Injection (HPCI) and Reactor Core Isolation Cooling (RCIC) system, are routed to the main condenser and, as such, would be captured as well. Except for establishing the proper flow path to the main condenser, this method is passive and does not require any logic control or interlocks. Since this ALT path was not designed to be single failure proof, a backup ALT path can be established by opening main steam drain valves MS-V46 through MS-V49 and V5005 to direct leakage to the isolated main condenser. The components included within the MSIV seismic verification boundary is shown on Figure 1.

As supported by the BWROG topical report, these ALT paths will assure that a reliable and effective method is available for treating any potential MSIV leakage during a postulated LOCA. Minor modifications to system piping and supports are necessary to ensure seismic ruggedness of the ALT paths. These modifications will be completed during the next refueling outage for Unit 1 (i.e., Refueling Outage 13, designated as B114R1). A walkdown of the Unit 2 ALT path and boundaries will be completed before or during the next Unit 2 refueling outage (i.e., Refueling Outage 15, designated as B216R1). Any modifications for Unit 2, required to resolve outliers identified during the seismic walkdowns, will be completed during the B216R1 outage.

Through walkdowns, the use of experience data, and bounding calculations, CP&L has demonstrated that the main steam piping, main condenser, and interconnecting piping and equipment are seismically adequate to withstand a design basis earthquake (DBE) and maintain their integrity. Upon NRC approval of the Alternative Radiological Source Term license amendment application, CP&L will incorporate the applicable alternate leakage treatment methods into the Operating and/or Emergency Operating Procedures, as appropriate.

NRC Limitations for the Alternate Leakage Treatment Path

In the Safety Evaluation for NEDC-31858P-A, Revision 2, the NRC identified nine limitations to be addressed as part of a plant-specific application of the approach for evaluating MSIV leakage. These limitations relate to assuring that the alternate leakage treatment path is functionally reliable commensurate with its intended safety function, and to assuring that the alternate leakage paths, including the main condenser, are seismically rugged. Each limitation is addressed below for BSEP, Units 1 and 2.

NRC Limitation 1:

Individual licensees should provide a detailed description of the ALT drain path and the basis for its functional reliability, commensurate with its intended safety-related function. The licensee should also describe their maintenance and testing program for the active components (such as valves) in the ALT path.

Discussion:

Under normal operating conditions, a flow path is in service to the main condenser through flow orifices FO-1766 through FO-1769; the orifice bypass valves (i.e., MS-F038A through F038D and MVD-F021) are normally closed. When required, the ALT path will be established by

opening the orifice bypass valves (i.e., MS-F038A through F038D) and MVD-F021. Also, normally open motor-operated valves MS-V28 (i.e., the steam supply to the moisture separator reheaters, reactor feed pumps, and steam jet air ejectors) and MVD-S1 (i.e., the steam supply main turbine steam seal system) will be manually closed, assuming balance-of-plant power to these valves is not available, to establish the MSIV leakage boundary. Valves MS-F038A through F038D and MVD-F021 are powered from a Class 1E power source and have redundant power from a Class 1E source. Opening these valves will provide a leakage path of sufficient size to ensure MSIV leakage is directed to the main condenser. The ALT path to the main condenser is shown as a solid line in Figure 2.

The motor-operated orifice bypass valves, MS-F038A through F038D, and MVD-F021 are not redundant and are not accessible during the post-accident period. Therefore, to ensure a highly reliable flow path is available, a backup ALT pathway has also been established. The backup ALT path consists of the four motor-operated steam line drain valves (i.e., MS-V46, V47, V48, and V49) and a common line manual isolation valve (MVD-V5005) located near the inlet of the main turbine stop valves. The backup ALT pathway is shown as a solid line on Figure 3. The MS-V46, V47, V48, V49, and MVD-V5005 valves are normally closed during power operation. Should a loss of function of the ALT path occur, these valves would be manually opened to establish the backup ALT path to the main condenser. The main condenser would be manually isolated to provide a boundary for either path. Each of the valves in the backup ALT pathway is accessible post-accident. Operating Procedures and/or Emergency Operating Procedures will be revised to incorporate establishment of the ALT and backup ALT paths.

The installed configuration, with the boundaries as identified on Figure 1, was walked down on Unit 1 to confirm the seismic ruggedness of the ALT and backup ALT paths. In accordance with the guidance of NEDC-31858P-A, the following design attributes were evaluated: (1) piping, pipe support and equipment seismic vulnerabilities, such as excessive span, heavy unsupported components, non-ductile piping or support material, localized stresses, severe corrosion, and anchorage, (2) seismic anchor movement, (3) seismic interaction (i.e., II/I) and proximity, (4) valve attributes, and (5) seismic attributes of the path boundaries. A full description of these walkdowns is found in Section 3 of the Seismic Evaluation Report. Conditions not meeting the acceptance criteria were reviewed. Bounding evaluations were performed for typical configurations and the results are presented in Table 4-6 of the Seismic Evaluation Report. The result of these evaluations demonstrate that the ALT paths will remain functional in the event of a design basis earthquake at BSEP.

The establishment of the ALT path will rely upon the MS-F038A, F038B, F038C, F038D, and MVD-F021 motor-operated valves opening. These valves will be added to the BSEP Augmented Inservice Testing (IST) Program and will be periodically stroke timed. Additionally, ALT boundary check valves MVD-V5008 and V5009 will be added to the plant check valve program to ensure reliability.

NRC Limitation 2:

Individual licensees should provide plant-specific information for piping design parameters (e.g., uniqueness of piping configurations, pipe span between supports, and diameter-to-thickness

ratios for each pipe size), to demonstrate that they are enveloped by those associated with the earthquake experience database.

Discussion:

The main steam drain piping included in the ALT path to the main condenser generally conforms to American National Standards Institute (ANSI) B31.1 design guidelines. Piping is typically constructed from SA-106 Grade B carbon steel with butt-welded or socket-welded joints. Pipe supports consist of a combination of rigid struts and spring or rod hangers. Support spacing generally meets the ANSI B31.1 recommended span. A comparison of the D/t ratios of the BSEP ALT paths was made to those presented in the earthquake experience database as shown in Figure 4-2 of the Seismic Evaluation Report. The design attributes of the BSEP piping and supports were compared to the attributes of the database piping and supports as shown in Tables 4-3 through 4-6 of the Seismic Evaluation Report. Overall, the BSEP piping compares favorably with sites in the experience database, as discussed in Section 4.3 of the Seismic Evaluation Report.

NRC Limitation 3:

Individual licensees should demonstrate that the plant condenser design falls within the bounds of design characteristics found in the earthquake experience database. This should include a review of as-built design documents and/or a walkdown to verify that the condenser has adequate anchorage.

Discussion:

The main condensers installed at BSEP, Unit 1 have been confirmed to fall within the bounds of design characteristics found in selected conventional power plant condensers included in the earthquake experience database of Appendix D to NEDC-31858P-A. As described in Section 3.3.1 of the Seismic Verification Report, the main condenser was included in walkdowns of the MSIV seismic verification boundary. Main condenser anchorage was identified as an outlier requiring further evaluation (i.e., see Table 3-3 of the Seismic Evaluation Report). The main condenser anchorage was compared with the performance of condensers in the earthquake experience database. Plant design drawings were reviewed for the main condenser anchorage. Calculations were performed to confirm the adequacy of the main condenser shell and anchorage during a DBE. The BSEP anchorage shear area to seismic demand is substantially greater than the selected database sites. The main condenser support load demand (i.e., combined seismic DBE and operational, horizontal shears and vertical uplift) is less than the total available anchorage capacity based on American Institute of Steel Construction (AISC) allowables (i.e., see Section 4.4 of the Seismic Evaluation Report).

Due to similarity of design and construction, it is expected that the results of the Unit 2 evaluations will be similar and, therefore, the Unit 2 main condenser will also be within NEDC-31858P design characteristics.

NRC Limitation 4:

Individual licensees should perform a plant-specific seismic evaluation for representative supports and anchorages associated with affected piping and the condenser.

Discussion:

EQE International, Incorporated engineers performed field walkdowns of the Unit 1 ALT path, ALT path boundaries, backup ALT path, and associated appendages. (EQE International, Incorporated was acquired by ABS Consulting in January 2000). All members of the teams were degreed engineers with 10 to 20 years of experience in structural engineering and/or earthquake experience methodology. Results of the seismic verification walkdowns indicated some "outliers" that require resolution as discussed in Table 4-1 of the Seismic Evaluation Report. Bounding calculations were performed to provide assurance that the ALT path piping, related supports, and components will remain functional in the event of a DBE at BSEP. Further discussion of the ALT path piping and supports is provided in Section 4.3 of the Seismic Evaluation Report. Calculations were also performed to confirm the adequacy of the main condenser shell and anchorage during a DBE. The BSEP anchorage shear area to seismic demand is substantially greater than the selected database sites. The main condenser support load demand (i.e., combined seismic DBE and operational; horizontal shears and vertical uplift) is less than the total available anchorage capacity based on AISC allowables (i.e., see Section 4.4 of the Seismic Evaluation Report).

NRC Limitation 5:

Individual licensees should confirm that the condenser will not fail due to seismic II/I type of interaction (e.g., structural failure of the turbine building and its internals).

Discussion:

The BSEP Turbine Building is a Class II structure. The BSEP main condensers are located in the lower elevations of the Turbine Building. The building above the main condensers and below the operating floor is a concrete reinforced structure. The superstructure above the operating floor is a steel framed crane bay with panel siding and roof constructed of metal deck, insulation and built up roofing. Seismic interaction issues, including potential II/I failures, were reviewed as part of the seismic verification walkdown performed by EQE engineers. The ground motion response spectra of selected database facilities were compared with BSEP design basis ground spectrum as shown in Figure 2-1 of the Seismic Evaluation Report. In general, the earthquake experience database sites have experienced strong ground motions that are in excess of the BSEP DBE at the frequency range of interest. Based on this comparison, CP&L has concluded that the BSEP DBE ground spectrum is generally bounded by those of the database sites at the frequencies of interest. The Turbine Building is designed for both Uniform Building Code (UBC) seismic and wind loadings. The design is controlled by hurricane wind loads. The design hurricane wind lateral shear and moment loads are substantially greater than the seismic UBC and DBE loads at most structure elevations. Some localized cracking of the concrete

structures at the lowest elevations could occur. However, seismic margins against collapse of structures designed to commercial codes and standards are typically in the order of 1.5 times design ground motions. Due to these substantial margins, failure and collapse of the Turbine Building under DBE loads is not expected. Further evaluation is provided in Section 4.2 of the Seismic Evaluation Report.

NRC Limitation 6:

Individual licensees of plants whose FSARs or UFSARs reference Appendix A to 10 CFR Part 100 should perform a bounding seismic analysis for the ALT path piping. Those licensees committed to Part 100 should discuss the basis for selecting a particular portion of the bypass/drain line for the bounding analysis.

Discussion:

Appendix A to 10 CFR Part 100 is not referenced in the BSEP UFSAR. As part of the plant seismic verification of the non-seismic ALT piping, related supports, and components using the earthquake experience-based approach as outlined in the NEDC-31858P-A, the following reviews were performed to demonstrate that the piping and related supports fall within the bounds of the experience database: (1) a review of the design codes and standards, piping design parameters and support configurations, and (2) seismic verification walkdowns to identify potential piping concerns. Conditions found during the seismic verification walkdown that did not meet the walkdown screening guidelines or which were judged by the seismic walkdown team to require further review were documented as "outliers." Bounding evaluations were performed for these outliers to determine their adequacy or to identify a need for modification of these supports.

NRC Limitation 7:

The methodology and criteria used for the analytical evaluations should be those which are in compliance with the design basis methodology and criteria, or those which are acceptable to the NRC.

Discussion:

Overall, this evaluation followed the guidelines established in Topical Report NEDC-31858P-A and the associated NRC Safety Evaluation. The three key elements of this effort are seismic experience database comparisons, seismic verification walkdowns, and the seismic assessments of selected components. Systems, structures, and components evaluated were the main condenser structure and anchorage, the Turbine Building structure, the ALT paths boundaries which included the main steam lines from the outboard MSIVs to the turbine stop valves and the lines to the bypass valves, and the ALT and backup ALT path piping and supports. All items listed were included in the initial seismic verification walkdown. The Turbine Building structure was evaluated by comparison to the earthquake experience database and by reconciling the original UBC seismic and wind loads to the DBE criteria. The main condenser was compared to

the condensers from the earthquake experience database. The main condenser shell and anchorage were confirmed by calculation to have margin in excess of that required. Piping and supports within and at the boundaries were walked down and compared to the criteria of the General Implementing Procedure (GIP) for seismic verification of nuclear plant equipment and to the piping and supports of the earthquake experience database. Outliers were identified and resolved by analysis or identified as modifications to be performed in the next Unit 1 refueling outage. Full details of the methodology are provided in the Seismic Evaluation Report.

NRC Limitation 8:

The facility ground motion estimates shown in Figures 1 through 13 of this [NRC] attachment have been reviewed and accepted by the NRC for inclusion in BWROG's earthquake experience database. These thirteen facility ground motion estimates may be used to verify the seismic adequacy of equipment in the alternative MSIV pathway for plants referencing the BWROG's Topical Report, NEDC-31858P, Revision 2.

Discussion:

A composite comparison of the ground response spectra of selected earthquake experience database facilities with the BSEP DBE is included in the Seismic Evaluation Report. Ten of the sites were included from the list reviewed and accepted by the NRC.

NRC Limitation 9:

Individual licensees are responsible for ensuring the sufficiency of the earthquake experience data being submitted for NRC review and determination. When a revision of the QME Standard that incorporates specific criteria for use of experience data in the qualification of mechanical equipment is endorsed by NRC, such criteria should be followed in applications involving MSIV ALT pathway evaluation.

Discussion:

As stated in the response to NRC Limitation 7, this evaluation followed the guidelines established in Topical Report NEDC-31858P-A and the associated NRC Safety Evaluation. CP&L believes that appropriate earthquake experience data has been used in the seismic evaluation of the ALT and backup ALT paths being established for BSEP.

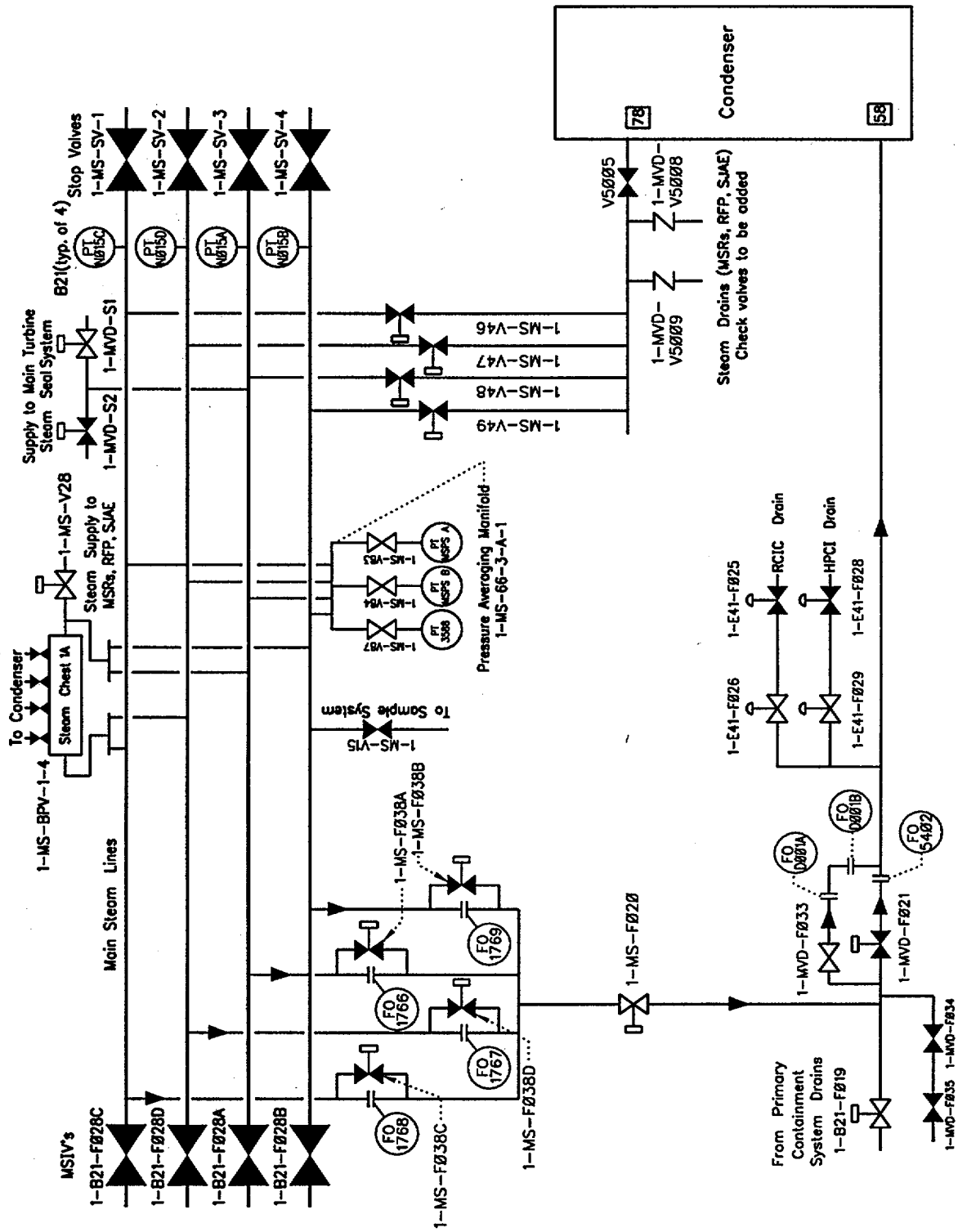

Figure 1
Brunswick MSIV Seismic Verification Boundary
(BSEP, Unit 1 Only)

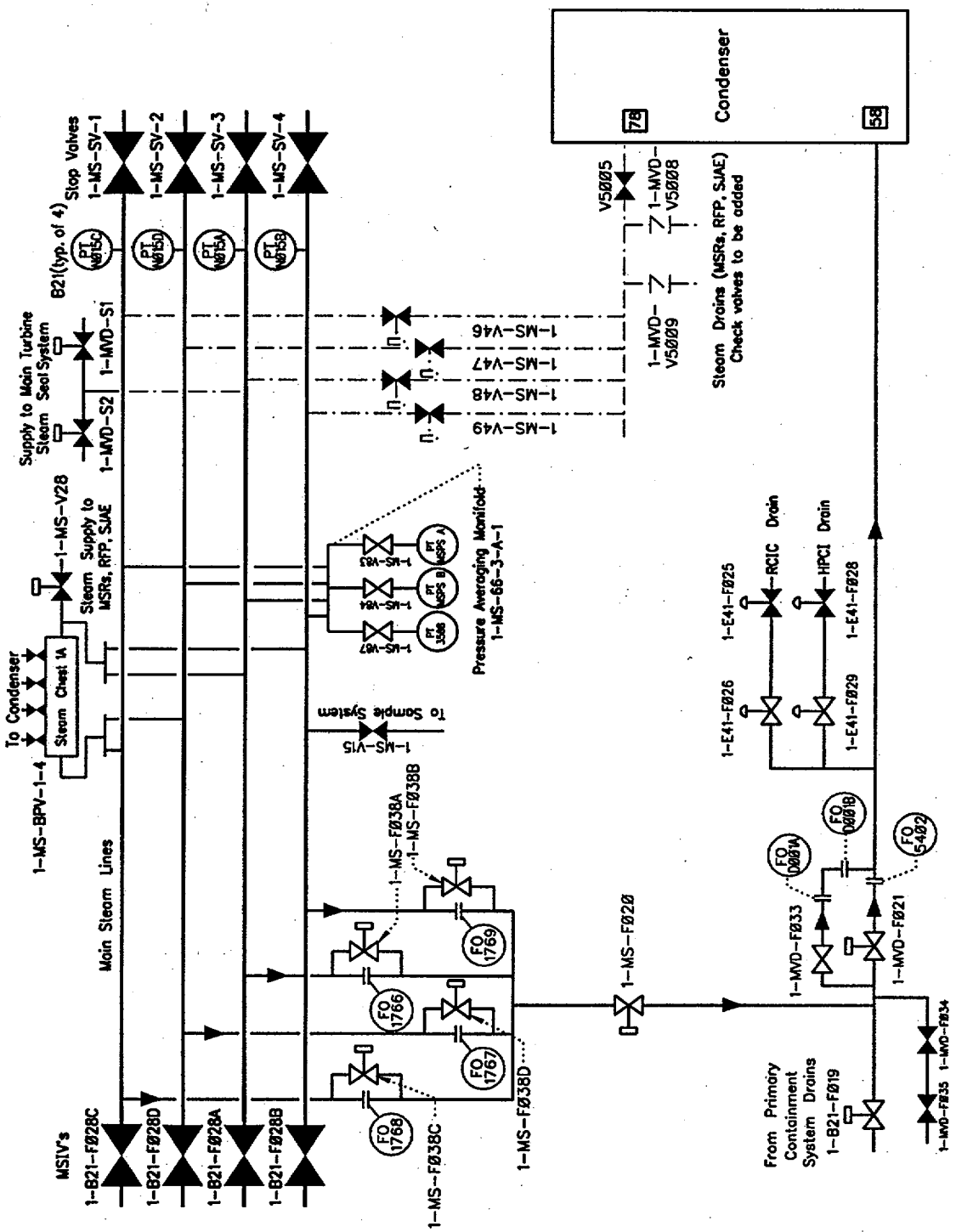

Figure 2
Brunswick Alternate Leakage Treatment Path
(BSEP, Unit 1 Only)

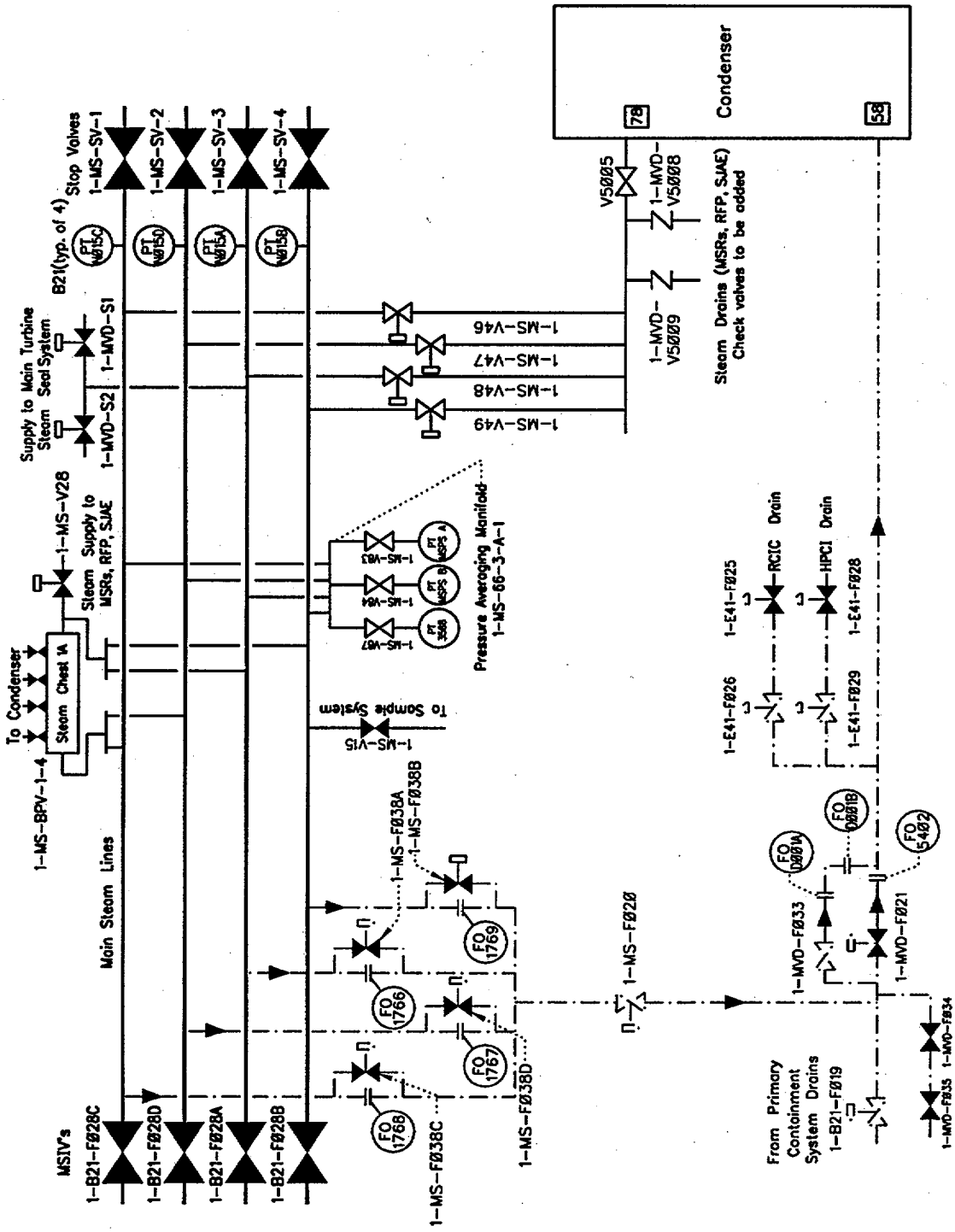

Figure 3
Brunswick Backup Alternate Treatment Path
(BSEP, Unit 1 Only)

ENCLOSURE 2

BRUNSWICK STEAM ELECTRIC PLANT, UNIT NOS. 1 AND 2
DOCKET NOS. 50-325 AND 50-324/LICENSE NOS. DPR-71 AND DPR-62
ADDITIONAL INFORMATION IN SUPPORT OF REQUEST FOR LICENSE AMENDMENTS TO ADOPT ALTERNATIVE RADIOLOGICAL SOURCE TERM
(NRC TAC NOS. MB2570 AND MB2571)

Seismic Evaluation Report,
August 31, 2001

ABS Consulting

Brunswick Nuclear Plant Unit 1 Alternative Source Term Technical Specification Change Alternate MSIV Leakage Path

Seismic Evaluation Report

August 31, 2001

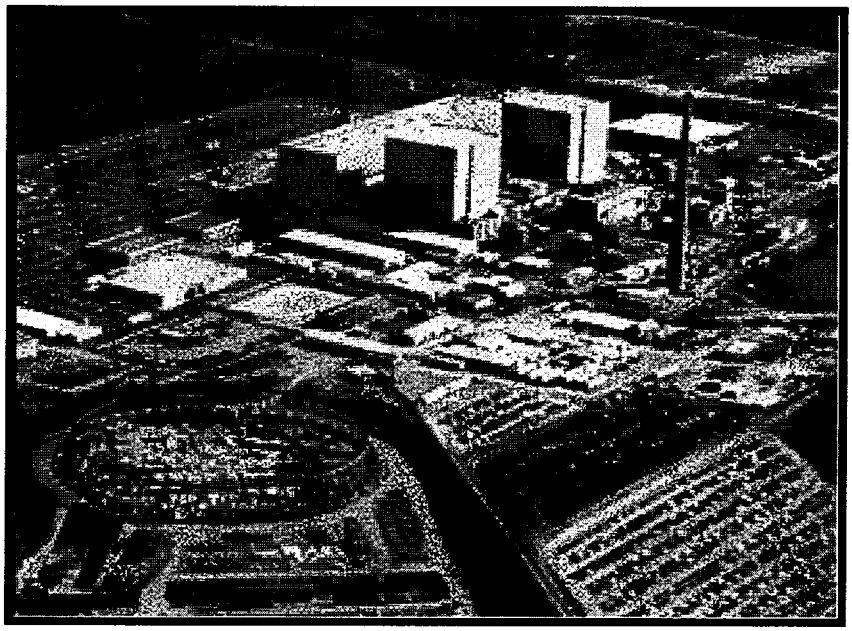

EQE INTERNATIONAL

Progress Energy

ABS Consulting

APPROVAL COVER SHEET

Title:	Brunswick Nuclear Plant Unit 1 Alternative Source Term Technical Specification Change Alternate MSIV Leakage Path Seismic Evaluation Report
Report Number:	405019-R-001
Client:	Carolina Power & Light
Project Number:	405019.01

Revision Number	Approval Date	Prepared	Reviewed	Approved
0	8/31/01	S. P. Harris	J. O. Dizon	S. P. Harris

TABLE OF REVISIONS		
Revision No.	**Description of Revision**	**Date**
0	Initial Issue	August 31, 2001

© 2001 by ABSG Consulting.
ALL RIGHTS RESERVED

The information contained in this document is solely for use by CP&L for regulatory submittal purposes.

Table of Contents

Page

1. **INTRODUCTION** 8

2. **SEISMIC EXPERIENCE DATABASE COMPARISONS** 9

   2.1 Seismic Ground Motions 9

   2.2 Piping, Equipment, and Other Plant Features 11

3. **SEISMIC VERIFICATION WALKDOWNS** 24

   3.1 Seismic Verification Review Guidelines 24

      3.1.1 Piping, Pipe Support and Equipment Design Attributes 25

      3.1.2 Seismic Anchor Movement Issues 26

      3.1.3 Seismic Interaction Issues (II/I and Proximity) 26

      3.1.4 Valve Design Attributes 26

   3.2 Seismic Verification Boundary 28

   3.3 Walkdown Results 28

      3.3.1 Seismic Walkdown 28

4. **SEISMIC ASSESSMENTS** 36

   4.1 Outlier Resolution 36

      4.1.1 Seismic Demand 36

      4.1.2 Seismic Capacity 37

   4.2 Turbine Building 38

   4.3 Alternate Leakage Treatment Piping and Supports 39

   4.4 Condenser 40

5. **REFERENCES** 67

TABLES

Page

3-1 Brunswick MSIV Leakage Boundary Flow Diagrams 30

3-2 Brunswick MSIV Leakage Boundary Points 31

3-3 Brunswick MSIV Walkdown Outliers 32

4-1 Brunswick MSIV Outliers Resolution Summary 43

4-2 Brunswick Turbine Building Design Basis 46

4-3 Design Basis for Brunswick ALT Related Piping and Supports 47

4-4 Seismic Experience Database Piping Data 48

4-5 Comparison of Brunswick and Selected Database Piping Parameter 54

4-6 Bounding Evaluation of Typical Support Configurations 55

4-7 Comparison of Brunswick and Selected Database Condensers 56

FIGURES

2-1 Comparison of Brunswick DBE Ground Spectrum and Selected Database Site Spectra 13

2-2 Comparison of Brunswick DBE and Valley Steam Plant Ground Spectra 14

2-3 Comparison of Brunswick DBE and Burbank Power Plant Ground Spectra 15

2-4 Comparison of Brunswick DBE and El Centro Steam Plant Ground Spectra 16

2-5 Comparison of Brunswick DBE and Moss Landing Power Plant Ground Spectra 17

FIGURES (CONT.)

Page

2-6 Comparison of Brunswick DBE and Humboldt Bay Nuclear Power Plant Ground Spectra 18

2-7 Comparison of Brunswick DBE and Coolwater Power Plant Ground Spectra 19

2-8 Comparison of Brunswick DBE and Commerce Refuge to Energy Plant Ground Spectra 20

2-9 Comparison of Brunswick DBE and Grayson Power Plant Ground Spectra 21

2-10 Comparison of Brunswick DBE and Las Ventanas Power Plant Ground Spectra 22

2-11 Comparison of Brunswick DBE and PALCO Cogeneration Plant Ground Spectra 23

3-1 Brunswick MSIV Seismic Verification Boundary 35

4-1 Comparison of Design Basis Wind with Seismic Lateral Shear and Moments for Brunswick Turbine Building 58

4-2 Comparison of Brunswick and Selected Database Piping D/t Ratios 59

4-3 Size Comparison of Brunswick Condenser with Moss Landing Database Condensers 60

4-4 Weight Comparison of Brunswick Condenser with Moss Landing Database Condensers 61

4-5 Height Comparison of Brunswick Condenser with Moss Landing Database Condensers 62

4-6 Plan Dimension Comparison of Brunswick Condenser with Moss Landing Database Condensers 63

FIGURES (CONT.)

Page

4-7 Schematic Plan View of Brunswick Condenser Anchorage 64

4-8 Comparison of Brunswick and Moss Landing Database Condenser Anchorage to Seismic Demand for Direction Parallel to the Turbine Generator Axis 65

4-9 Comparison of Brunswick and Moss Landing Database Condenser Anchorage to Seismic Demand for Direction Transverse to the Turbine Generator Axis 66

1. Introduction

This report summarizes the engineering activities performed for the supplemental plant specific Main Steam piping seismic verification to support the Alternative Source Term tech spec change at Brunswick Nuclear Plant Unit 1. The verification program was performed in accordance with the recommendations of the General Electric Boiling Water Reactor Owners Group (BWROG) Report for Increasing MSIV Leakage Rate Limits and Elimination of Leakage Control Systems (Reference 1). The U.S. Nuclear Regulatory Commission (NRC) has reviewed the BWROG report and issued a safety evaluation report (SER) on its application for addressing the MSIV leakage issues (Reference 2), subject to certain limitations.

Engineering activities associated with the supplemental plant specific seismic verification program, as recommended in the BWROG report, consist of the following key elements:

- Seismic Experience Database Comparisons
- Seismic Verification Walkdowns
- Seismic Assessments of Selected Components

Detailed discussions of each of these activities are presented in the following sections of the report.

2. Seismic Experience Database Comparisons

The seismic experience data are derived from an extensive database on the performance of power plants and industrial facilities in past strong-motion earthquakes. These performance data are compiled by EQE for the Seismic Qualification Utility Group, the Electric Power Research Institute and others, and included over 100 facilities in more than 60 earthquakes that have occurred around the world from 1934 to present. Of interest to the MSIV leakage issues are the performance of the non-seismically analyzed main steam system piping, related components and supports, and condensers.

The BWROG Report (Reference 1) summarizes data on the performance of main steam piping and condensers in past strong-motion earthquakes and compares these piping and condensers with those in typical U.S. GE Mark I, II, and III nuclear plants. The earthquake experience data and similarity comparisons are then used to draw conclusions on how the GE piping and condensers would perform in a design basis earthquake (DBE).

The following sections present experience database comparisons that are plant-specific to Brunswick Nuclear Plant for use to support the increased MSIV leakage tech spec change submittal.

2.1 Seismic ground motions

Ground motion estimates of 13 database sites were reviewed and accepted by the NRC staff for inclusion in the BWROG's earthquake experience database, and are presented in the referenced NRC Safety Evaluation Report (SER, Reference 2). To establish applicability of the BWROG's earthquake experience-based methodology for demonstrating the seismic ruggedness of non-seismically analyzed main steam piping

and associated components at Brunswick, comparisons of the ground response spectra of selected database facilities with Brunswick design basis ground spectrum were made.

The majority of the MSIV alternate leakage treatment (ALT) path and associated piping systems and the condensers at Brunswick are located in the lower elevations of the Turbine Building. Brunswick Turbine Building is classified as a Class II structure, hence, no dynamic analysis of the building was performed. The building below the operating floor is a reinforced concrete structure. The horizontal ground spectrum is taken as the Brunswick 5% damped design basis DBE spectrum with a 0.16g ZPA.

A composite comparison of the ground response spectra of selected earthquake experience database facilities with the Brunswick design basis DBE ground spectrum is shown in Figure 2-1. The selected ground motions include the following 10 sites from among the 13 database facilities reviewed and accepted by the NRC:

- Valley Steam Plant - USGS estimate
  1971 San Fernando Earthquake (M6.6)
- Burbank Power Plant - USGS estimate
  1971 San Fernando Earthquake (M6.6)
- El Centro Steam Plant - N/S direction
  1979 Imperial Valley Earthquake (M6.6)
- Moss Landing Power Plant - PG&E estimate
  1989 Loma Prieta Earthquake (M7.1)
- Humboldt Bay Nuclear Power Plant - Average
  1975 Ferndale Earthquake (M5.5)
- Coolwater Power Plant - Transverse direction
  1992 Landers Earthquake (M7.3)

- Commerce Refuge to Energy Plant (LA Bulk Mail) - E/W direction
  1987 Whittier Narrows Earthquake (M5.9)

- Grayson Power Plant (Glendale) – N110E direction
  1971 San Fernando Earthquake (M6.6)

- Las Ventanas Power Plant – Transverse direction
  1985 Chile Earthquake (M7.8)

- PALCO Cogeneration Plant (Rio Dell) – Average
  1992 Petrolia Earthquake (M6.9)

The individual comparison plots of the 5% damped ground spectra of the above 10 database facilities with the Brunswick DBE ground spectrum are shown in Figures 2-2 to 2-11. In general, the earthquake experience database sites have experienced strong ground motions that are in excess of the Brunswick DBE at the frequency range of interest (i.e., about 1 Hz. and above for piping and rigid range for equipment). All of the database site ground motions envelope the Brunswick DBE ground spectrum by large factors in various frequency bands within the 1 Hz. and above range.

Based on the above observations and comparison, it is concluded that the Brunswick DBE ground spectrum is generally bounded by those of the earthquake experience database sites at the frequencies of interest. Hence, the use of earthquake experience-based approach for demonstrating the seismic ruggedness of non-seismically analyzed main steam piping and associated components at Brunswick, consistent with the BWROG's recommendations and limitations of the SER, is appropriate.

2.2 Piping, Equipment and Other Plant Features

The main steam piping and condensers in the earthquake experience database exhibited substantial seismic ruggedness, even when they are typically not designed to resist earthquakes. This is a common conclusion in studies of this type on other plant items such as welded steel piping in general, anchored equipment such as motor control

centers, pumps, valves, structures, and so forth. That is, with limited exceptions, normal industrial construction and equipment typically have substantial inherent seismic ruggedness, even when they are not designed for earthquakes. No failures of the main steam piping were found. Anchored condensers have also performed well in past earthquakes with damage limited to minor internal tube leakage.

The BWROG Report (Reference 1) contains detailed discussions and comparisons of main steam piping and condenser design in several earthquake experience database sites and example GE Mark I, II, and III plants in the U.S. The general conclusions of these comparisons are as follows:

- GE plant designs are similar to or more rugged than those in the earthquake experience database that exhibited good earthquake performance;
- The possibility of significant failure in GE BWR main steam piping or condensers in the event of an eastern U.S. design basis earthquake is highly unlikely; and that
- Any such failure would also be contrary to a large body of historical earthquake experience data, and thus unprecedented.

Plant-specific comparisons of the main steam piping, related components and supports, and condensers at Brunswick with those in the selected earthquake experience database facilities are provided in Section 4 of this report.

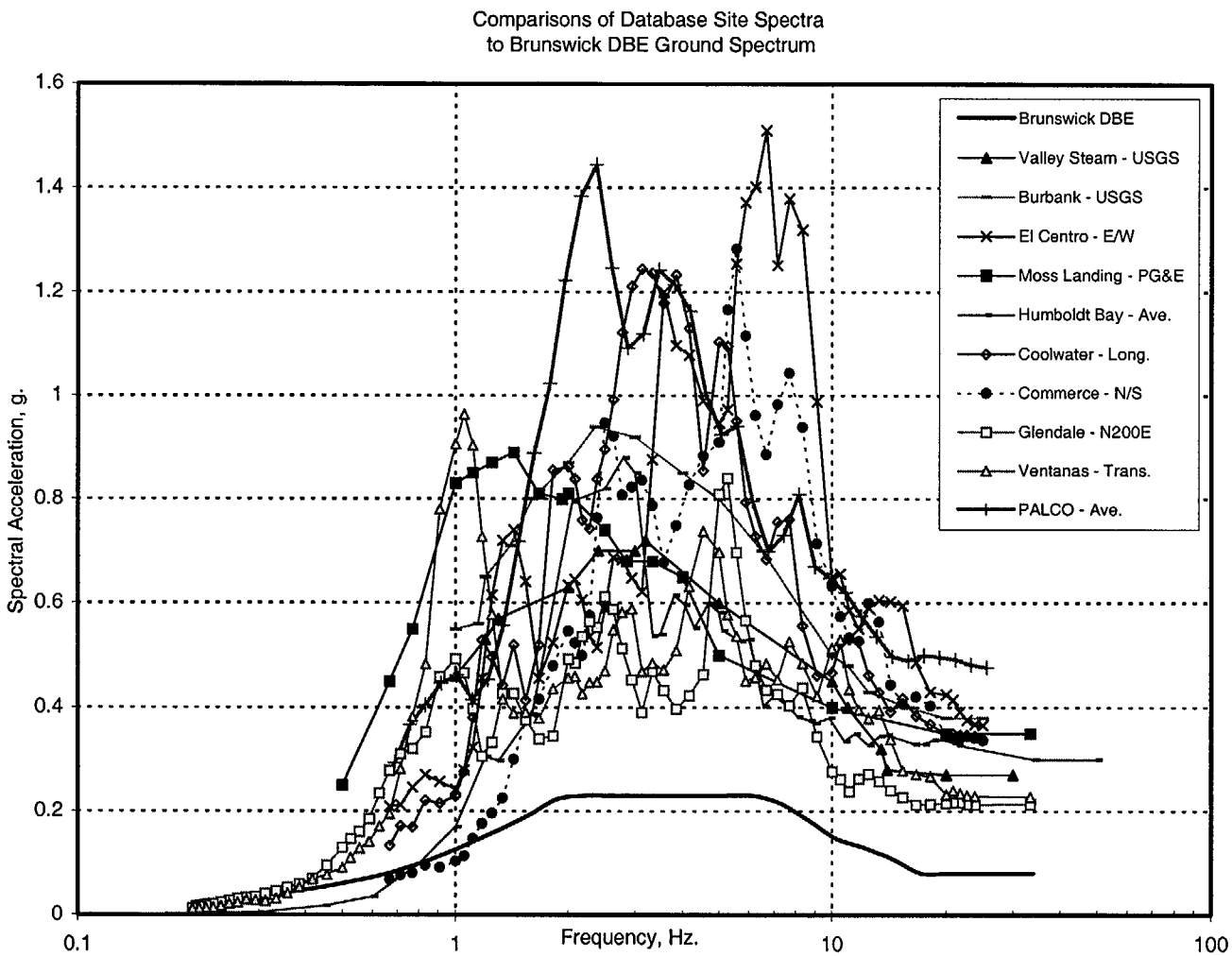

Figure 2-1: Comparison of Brunswick DBE Ground Spectrum and Selected Database Site Spectra

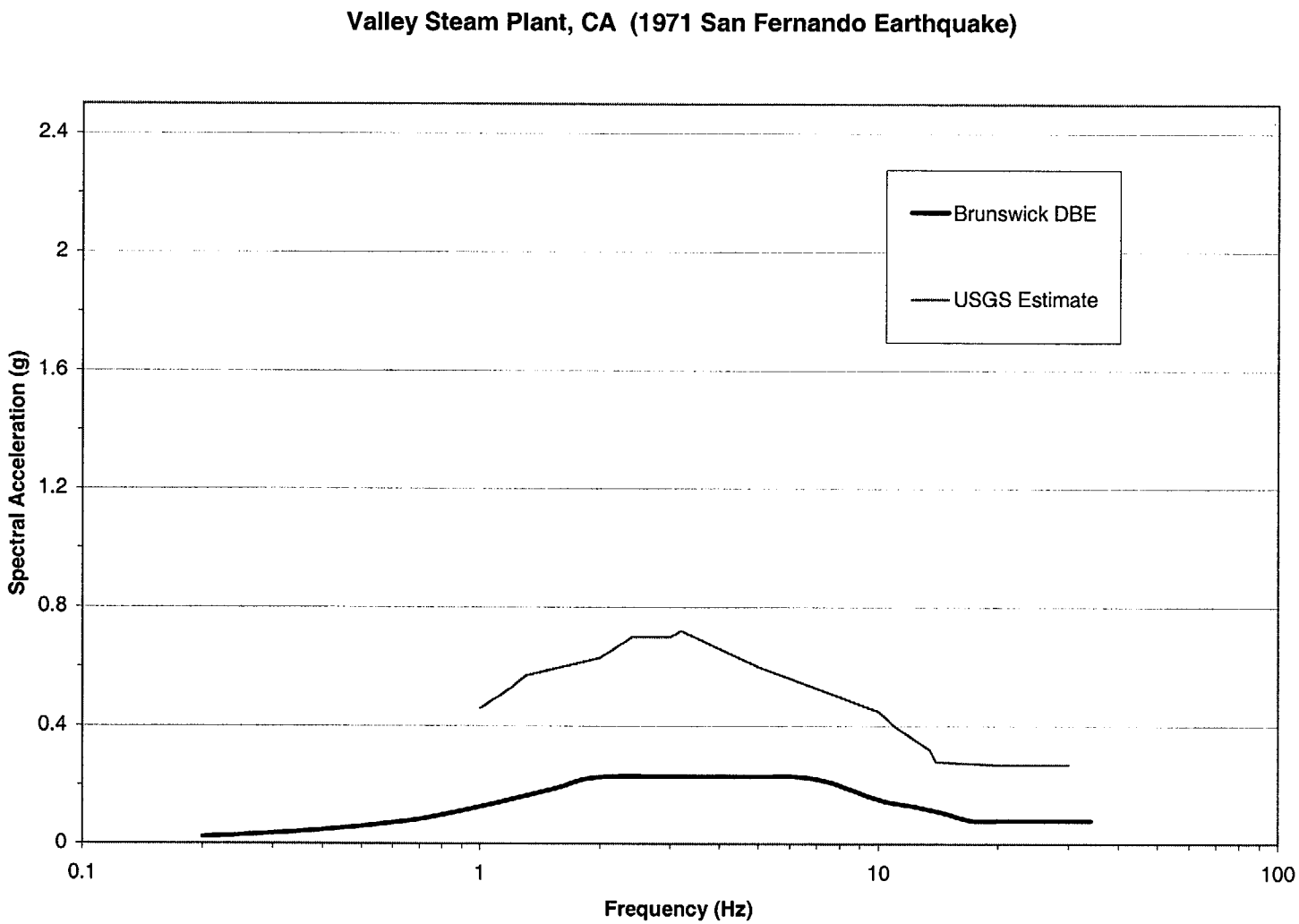

Figure 2-2: Comparison of Brunswick DBE and Valley Steam Plant Ground Spectra

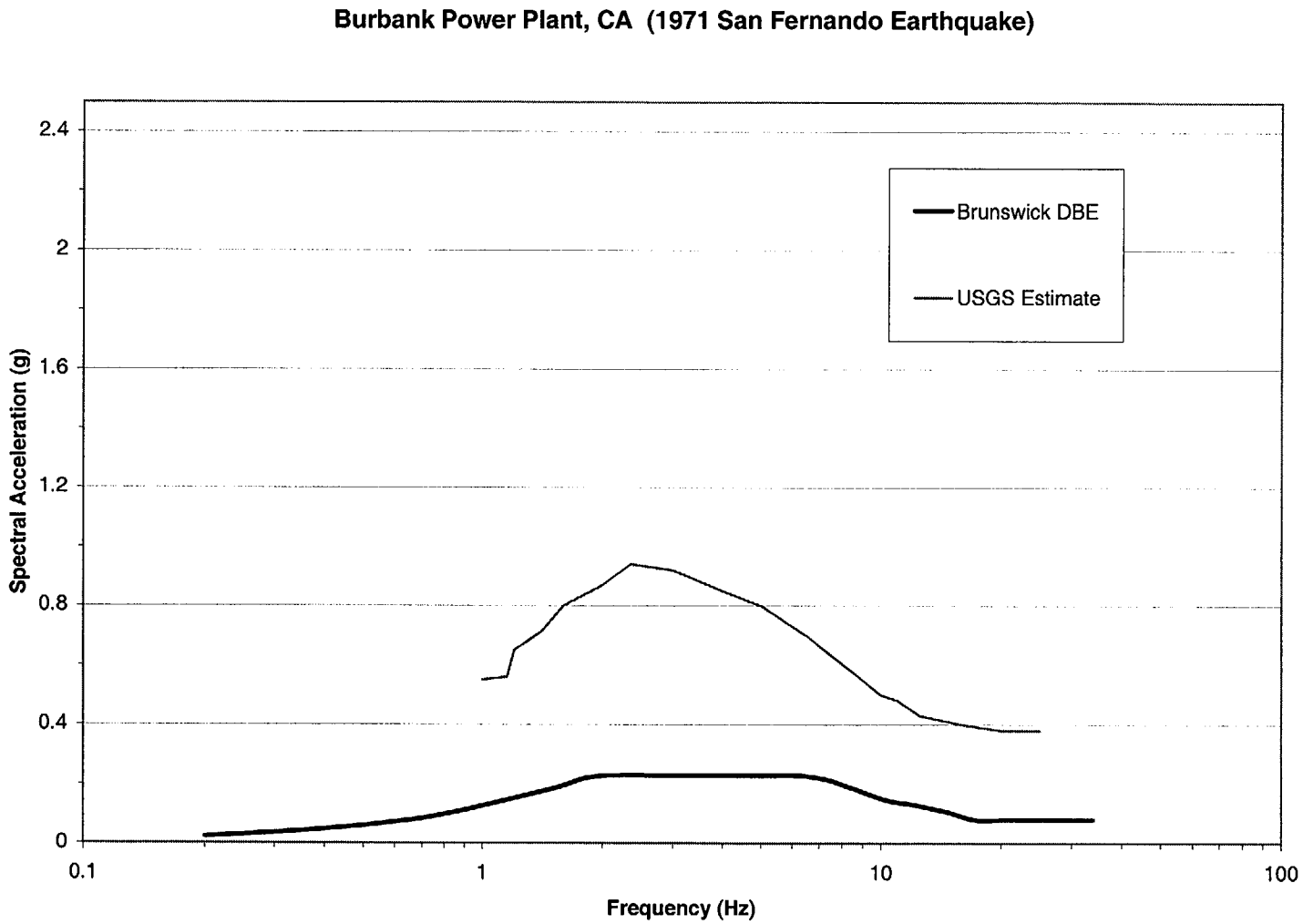

Figure 2-3: Comparison of Brunswick DBE and Burbank Power Plant Ground Spectra

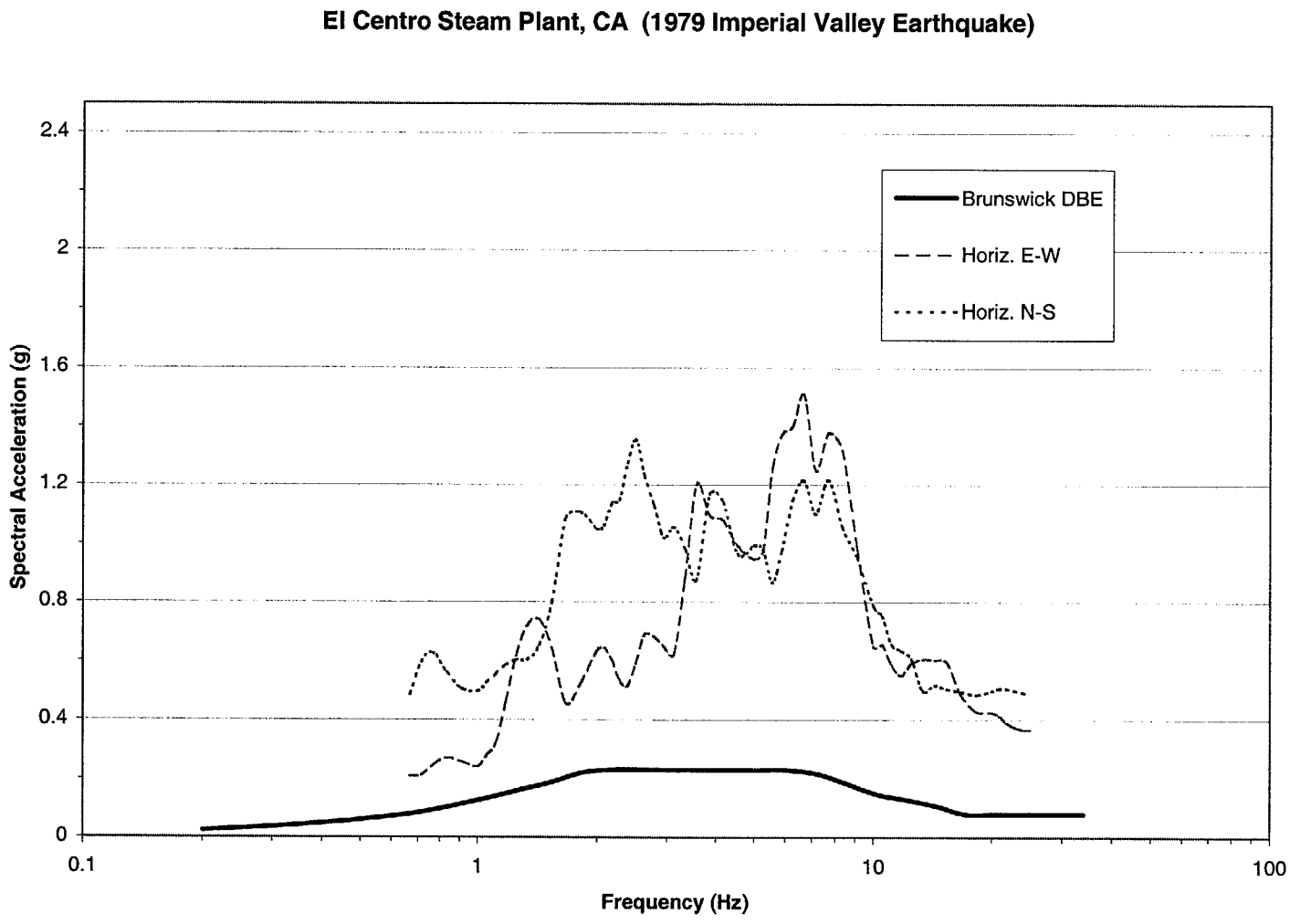

Figure 2-4: Comparison of Brunswick DBE and El Centro Steam Plant Ground Spectra

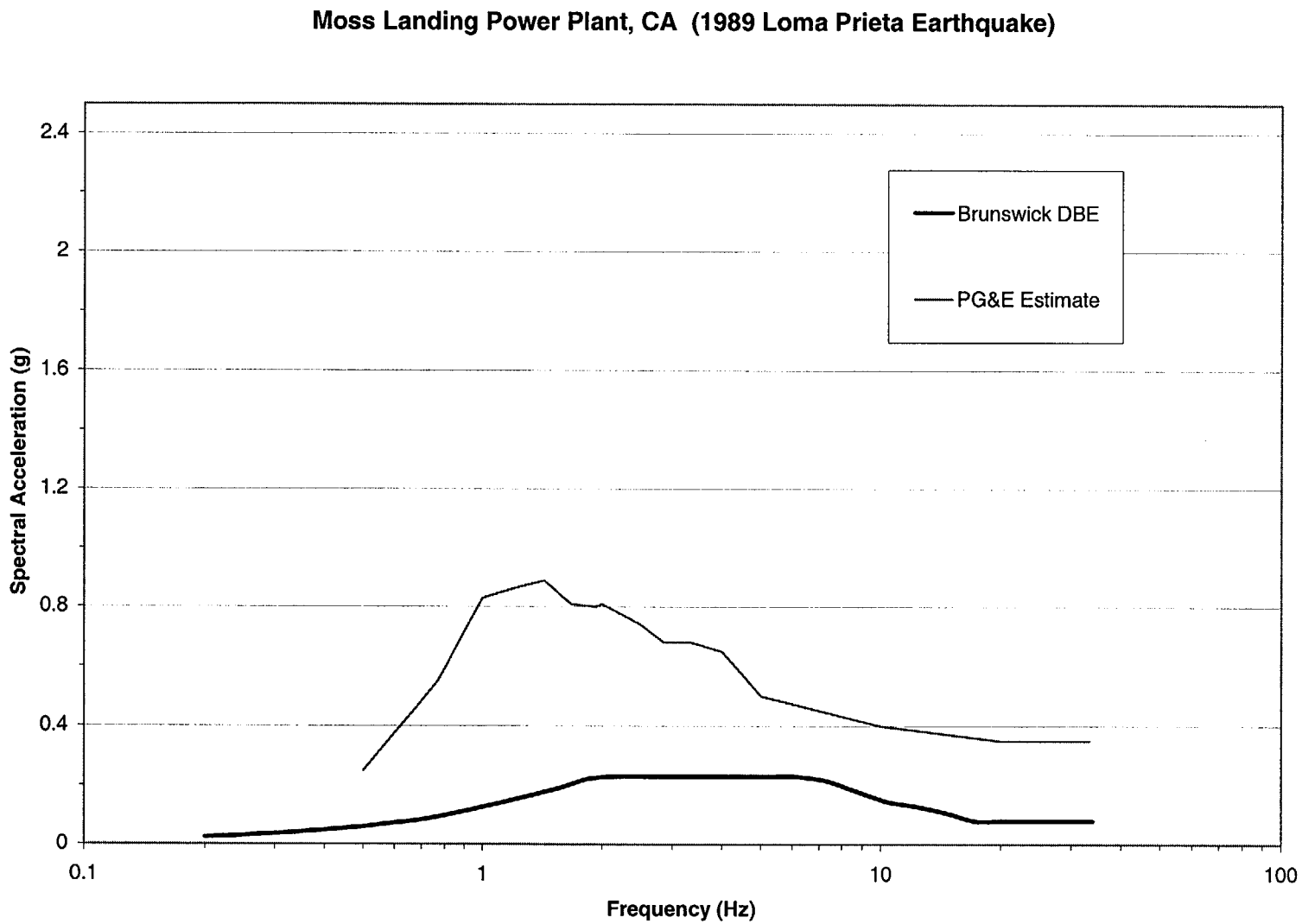

Figure 2-5: Comparison of Brunswick DBE and Moss Landing Power Plant Ground Spectra

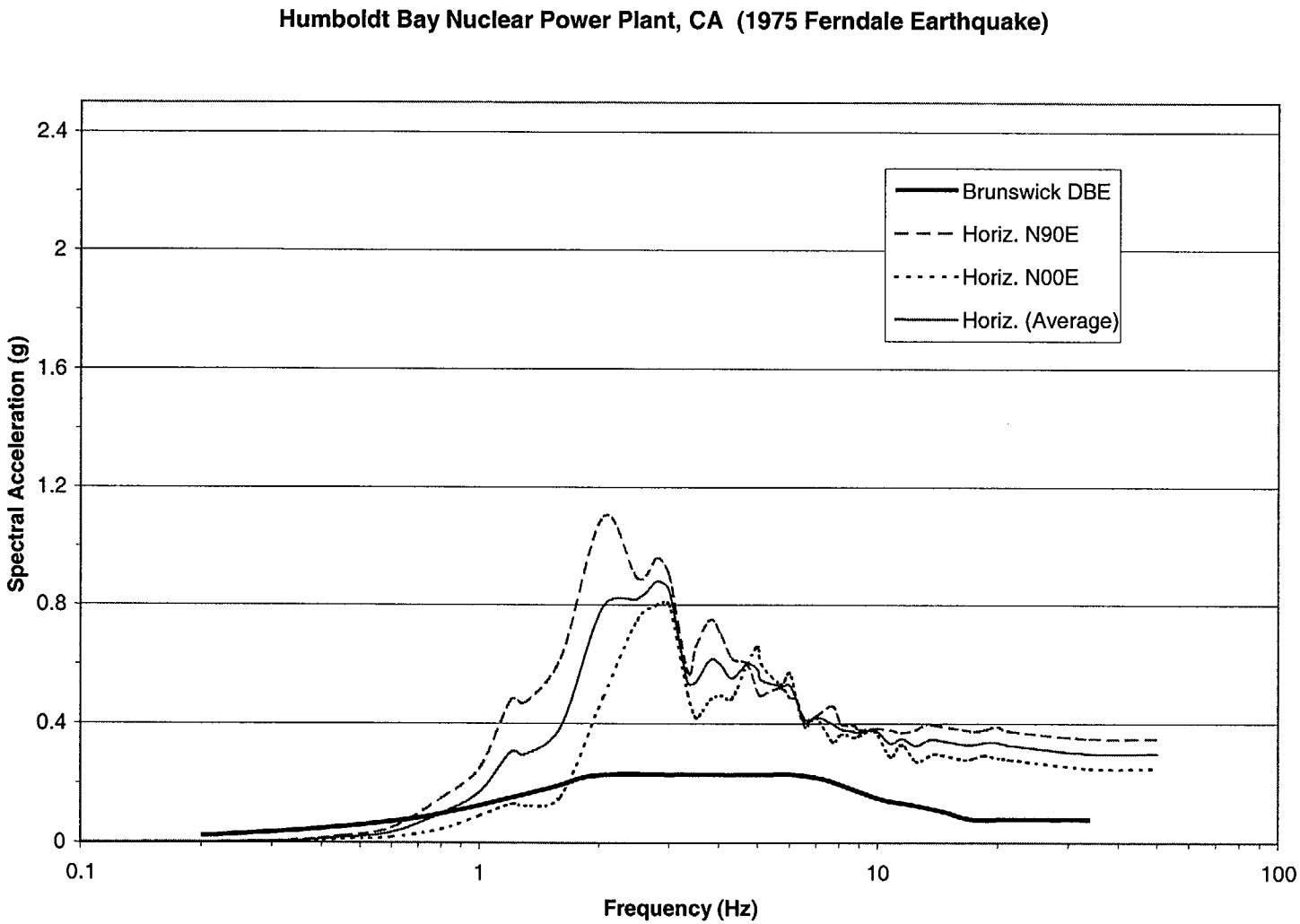

Figure 2-6: Comparison of Brunswick DBE and Humboldt Bay Nuclear Power Plant Ground Spectra

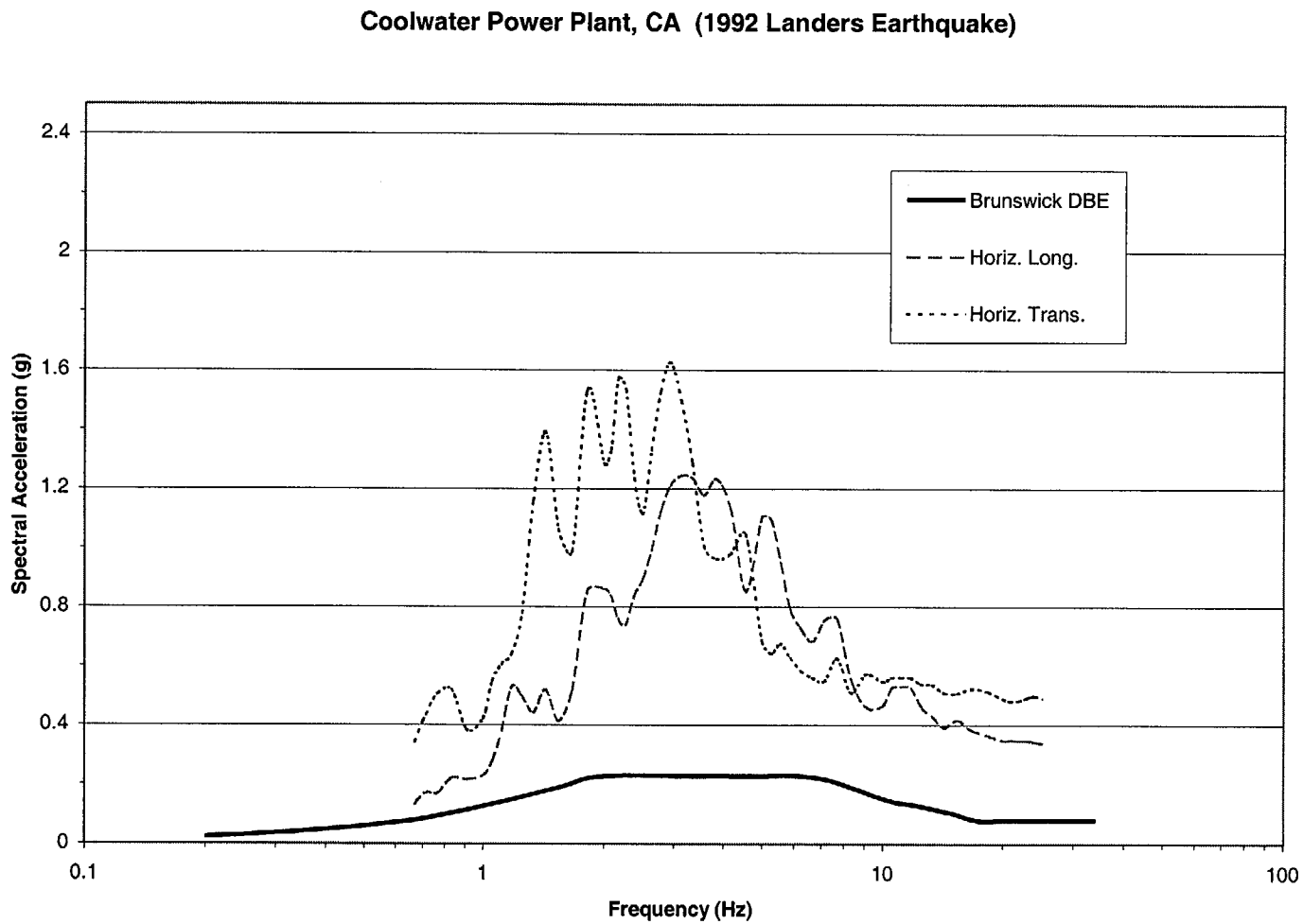

Figure 2-7: Comparison of Brunswick DBE and Coolwater Power Plant Ground Spectra

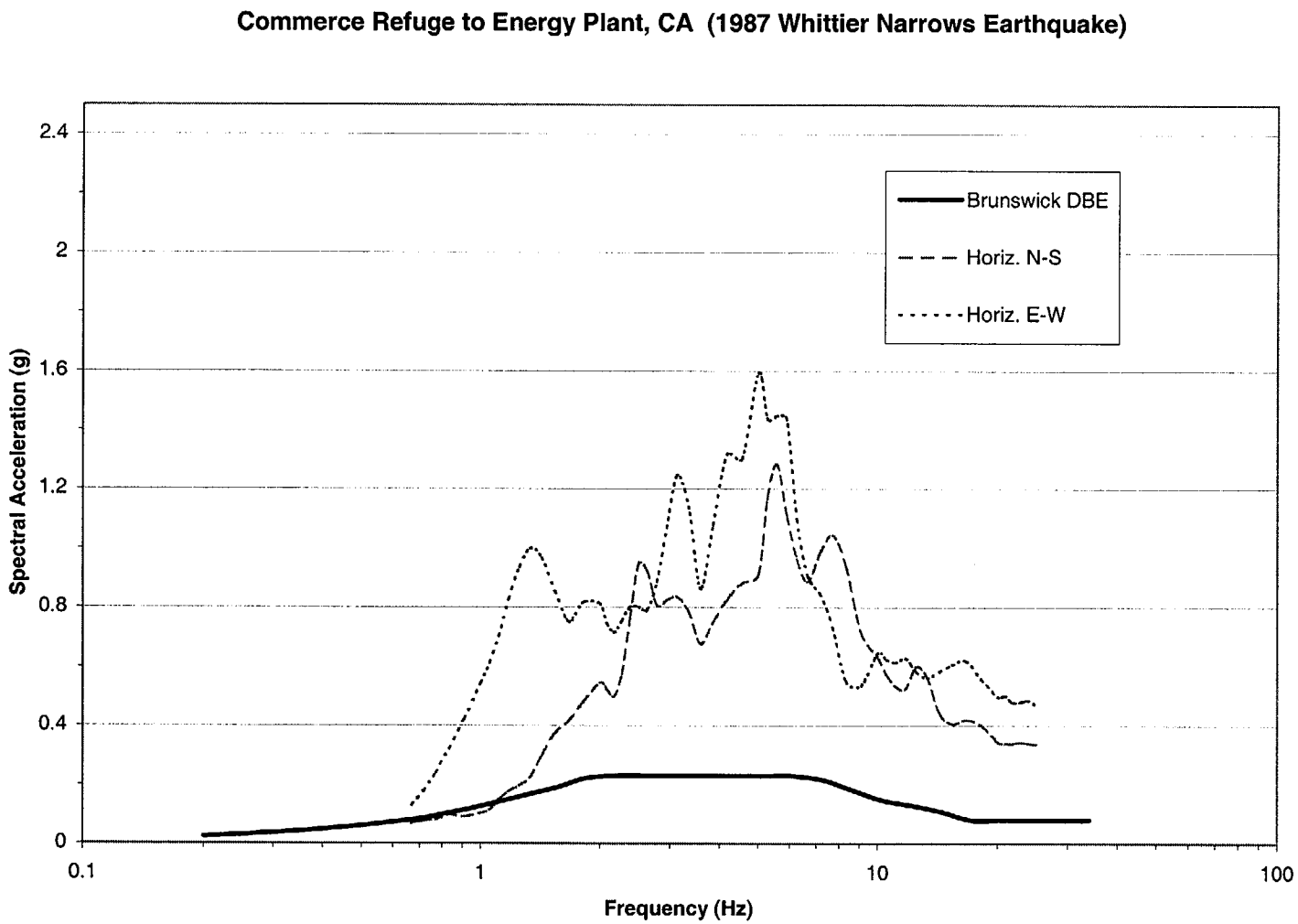

Figure 2-8: Comparison of Brunswick DBE and Commerce Refuge to Energy Plant Ground Spectra

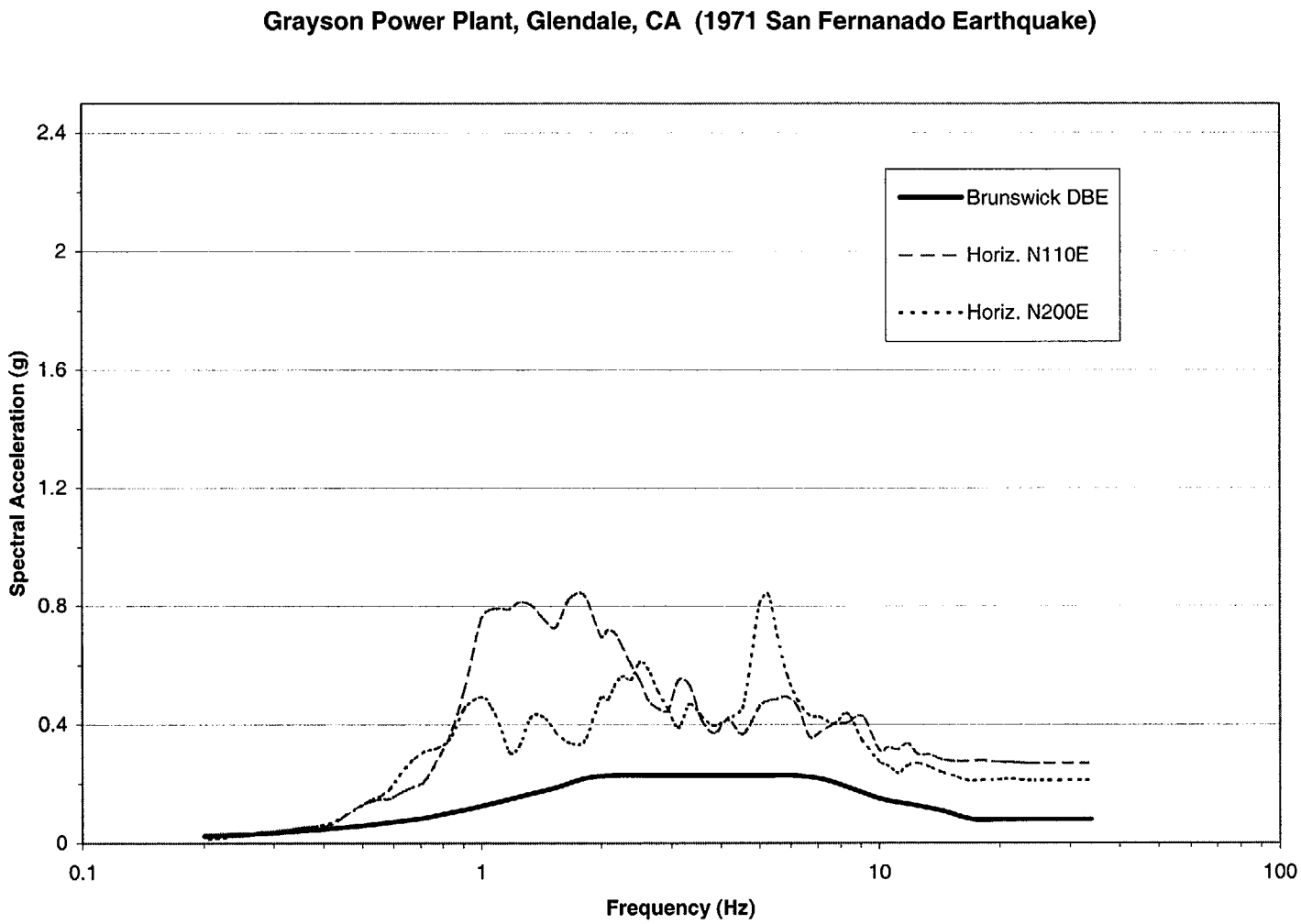

Figure 2-9: Comparison of Brunswick DBE and Grayson Power Plant Ground Spectra

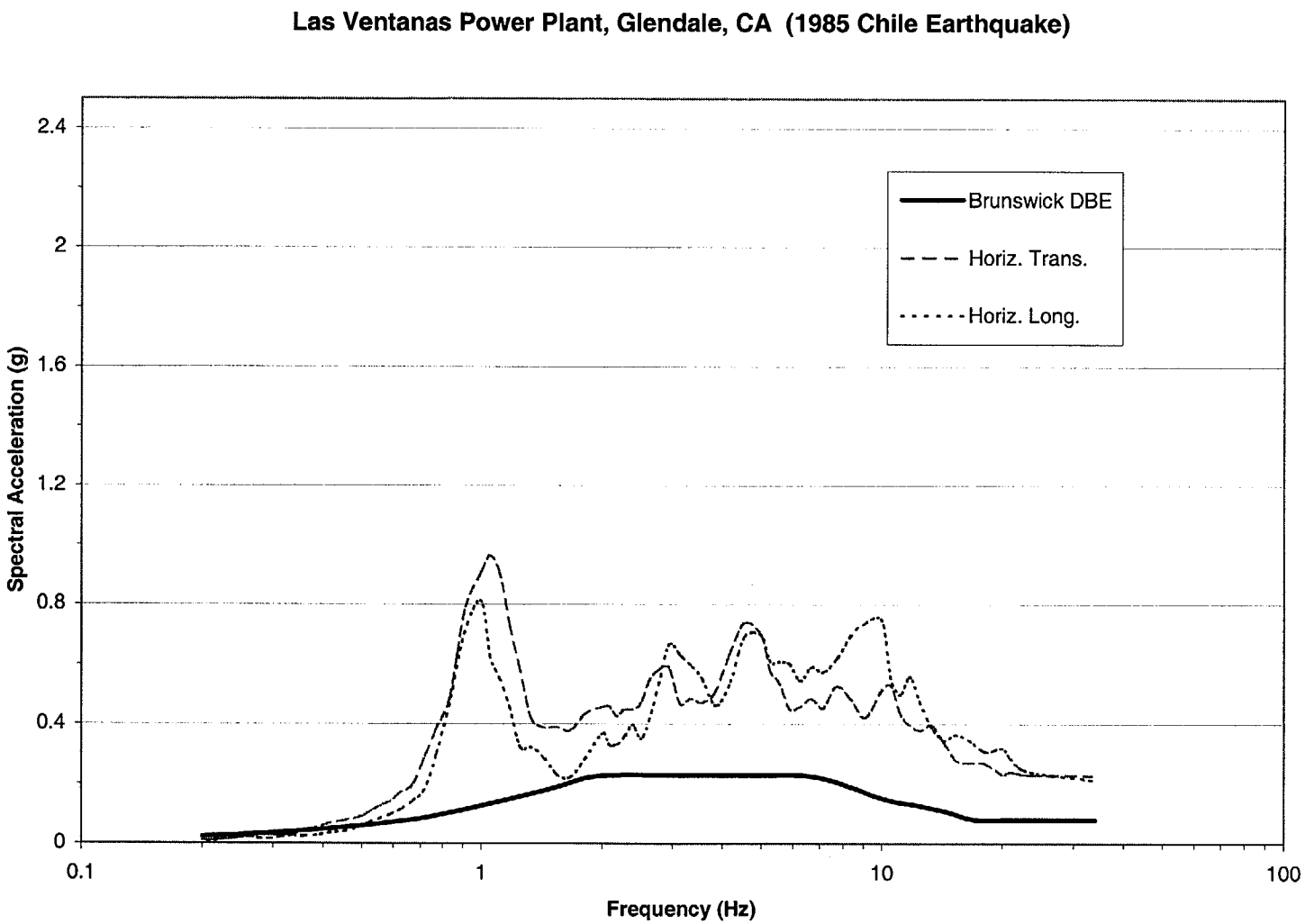

Figure 2-10: Comparison of Brunswick DBE and Las Ventanas Power Plant Ground Spectra

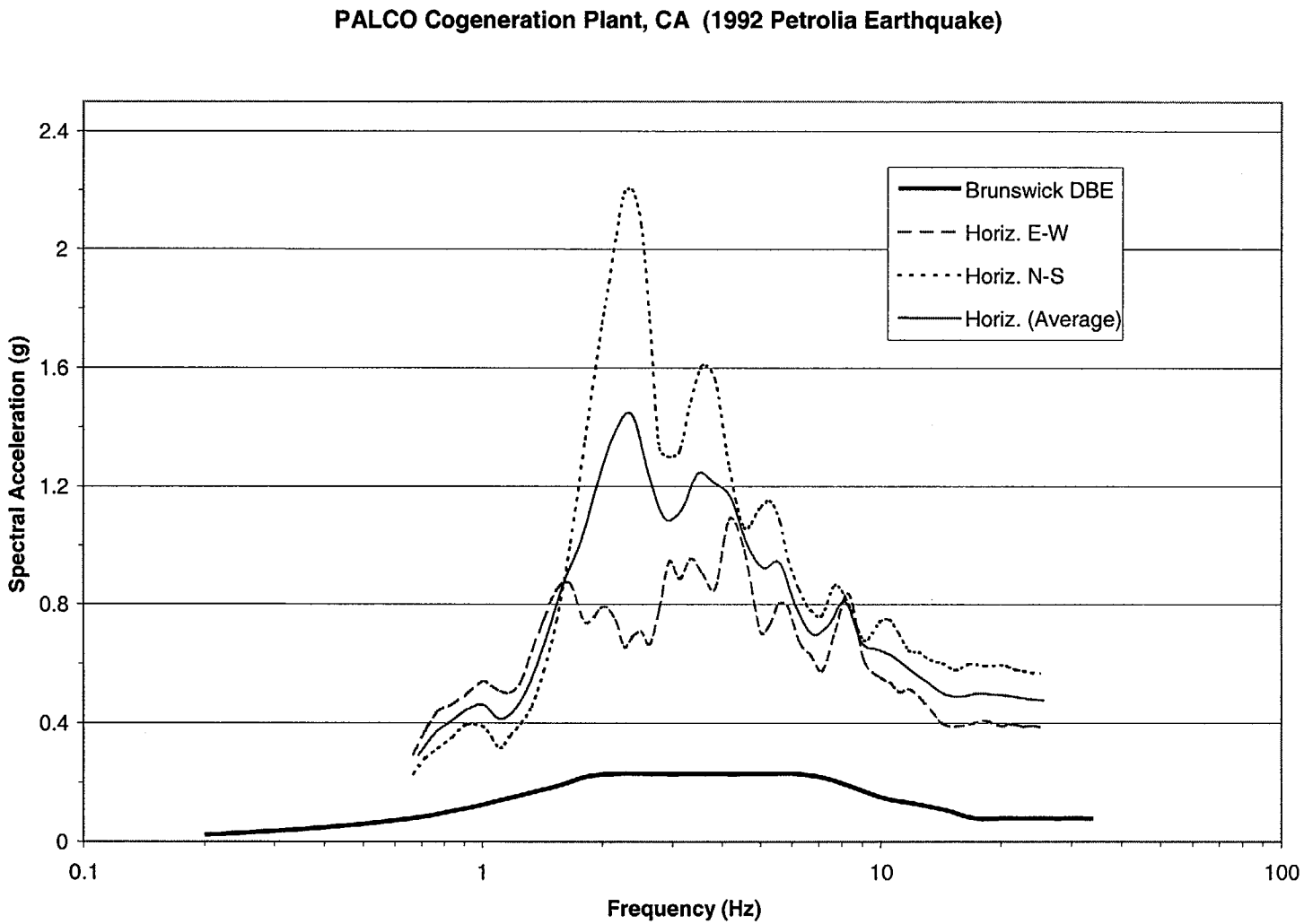

Figure 2-11: Comparison of Brunswick DBE and PALCO Cogeneration Plant Ground Spectra

3. Seismic Verification Walkdowns

Very few components of nuclear plant systems are unique to the nuclear facilities. Nuclear plant systems include equipment, piping, tubing, conduit, and many other items that are common components of conventional power plants and industrial facilities. Seismic experience data based methods have been developed to address seismic issues associated with the adequate performance of these equipment and commodities not designed, procured and installed to current nuclear seismic criteria. By reviewing the performance of the database facilities that contain equipment similar to that found in nuclear plants, conclusions can be drawn about the performance of nuclear plant equipment during and after earthquake events.

Extensive work has been performed documenting the performance of power plant equipment performance and the common sources of seismic damage to equipment and piping. In general, equipment, piping and tubing systems in the seismic experience database have performed very well in earthquakes, even though they were typically designed for deadweight and operating loads only, with little or no consideration for seismic loads. Performance of piping and equipment in past earthquakes are summarized in Appendix D of the BWROG Report (Reference 1). Earthquake experience-based methods provide the basis for the seismic review of the main steam piping and equipment within the MSIV alternate leakage treatment (ALT) boundary at Brunswick.

3.1 Seismic Verification Review Guidelines

Various design attributes of the as-installed scope of equipment, piping, and tubing were reviewed and evaluated by the Seismic Walkdown Teams to ensure that the Brunswick installations are representative of database design practice and that components are free of known seismic vulnerabilities. Earthquake experience has identified conditions

that have resulted in failure of piping and tubing systems and components. The conditions evaluated in the walkdown reviews included:

- Piping, Pipe Support and Equipment Design Attributes
- Seismic Anchor Movement Issues
- Seismic Interaction Issues (II/I & Proximity)
- Valve Design Attributes

The above design attributes and conditions are briefly discussed below.

3.1.1 Piping, Pipe Support and Equipment Design Attributes

The Seismic Walkdown reviewed the piping and tubing systems, and associated supports to ensure that the design attributes and conditions are consistent with good design and industry standard practices. The systems were also screened to ensure that they are free from known seismic vulnerabilities identified from earthquake experience data. These design attributes include:

- Piping with dead weight support spacing greatly in excess of the B31.1 suggested spans, or tubing with excessive sagging.
- Heavy, unsupported in-line components.
- Piping constructed of non-ductile materials such as cast iron or PVC.
- Non-standard fittings or unusual attachments that could cause excessive localized stresses.
- Pipe supports that exhibit non-ductile behavior.
- Presence of severe corrosion.

In addition, anchorage of terminal equipment to piping and tubing systems were reviewed for adequacy.

3.1.2 Seismic Anchor Movement Issues

The experience database includes instances of seismic damage to piping, tubing and supports that were attributed to seismic anchor movement. Damage was the result of excessive movement of terminal end equipment, differential movement between supports in adjacent buildings, and excessive movements imposed on branch lines by flexible headers. These attributes were evaluated during the piping walkdowns.

3.1.3 Seismic Interaction Issues (II/I and Proximity)

The seismic interaction review was a visual inspection of structures, piping, or equipment adjacent to the components under evaluation. The seismic interaction review evaluated conditions where seismically induced failures (II/I) and displacements of adjacent structures, piping, or equipment (proximity) could adversely affect the required seismic performance of the system and components under consideration.

3.1.4 Valve Design Attributes

Screening guidelines are provided for valves that are relied upon to establish the ALT pathway or are part of the Seismic Verification Boundary. The guidelines are consistent with the SQUG Generic Implementation Procedure (GIP, Reference 5) and include provisions for air-operated diaphragm valves, spring-operated pressure relief valves, piston-operated valves of light-weight construction, motor-operated valves, and substantial piston-operated valves.

3.2 Seismic Verification Boundary

The walkdown scope included the Main Steam drain path that will be established to convey leakage past the outboard Main Steam Isolation Valves (MSIV) to the isolated

condenser and includes piping, instrumentation, valves and equipment that would be required to maintain the drain pathway.

The Seismic Verification Boundary for the MSIV Alternate Leakage Treatment path was developed by Brunswick engineering, and is shown in Figure 3-1. The associated flow diagrams are listed on Table 3-1, and the piping isolation boundaries defining the seismic verification boundary are shown on Table 3-2. The Seismic Verification Boundary generally consists of the following portions of the Main Steam (MS) system beyond the outboard MSIV's:

1. Main Steam drain path to the condenser for any leakage past the isolated outboard MSIVs.

2. Main Steam piping from the outboard MSIV to the Main Steam Stop Valves (MSV).

3. Main Steam Bypass piping from the Main Steam lines to the Bypass Valve chest.

4. Main Condenser.

5. Additional piping and instrumentation within the Seismic Verification Boundary includes:

   — Main Steam Drip Leg Drains

   — Main Steam Averaging Manifold

   — Stop and Control Valve Seat Drains to Condenser

   — Steam Sample System

   — HPCI Steam Drains to Main Steam

   — RCIC Steam Drains to Main Steam

— Miscellaneous Steam Drains to Condenser

3.3 Walkdown Results

Field walkdowns of the main steam lines, ALT drain path and associated appendages within the Seismic Verification Boundary were conducted during the Unit 1 outage in April 1995 by EQE engineers. Plant specific guidance, systems expertise and support were provided by Brunswick Site Engineering staff. All members of the MSIV Seismic Verification Walkdown Teams are degreed engineers, have ten to twenty years of experience in structural engineering and/or earthquake engineering application to nuclear power plants, and are familiar with the earthquake experience methodology. EQE engineers have performed the complete MSIV Seismic Verification Walkdowns in accordance with the recommendations of the GE NEDC-31858P (BWROG Report, Reference 1) at several other plants.

Results of the Seismic Verification Walkdowns, including the identified walkdown open items or "Outliers", are discussed in detail in Reference 3. A brief summary of the walkdown results is presented below, with walkdown outliers summarized in Table 3-3 for Brunswick.

3.3.1 Seismic Walkdown

The main steam drain piping included in the MSIV alternate leakage treatment (ALT) path to the condenser generally conform to ANSI B31.1 design guidelines. Piping are typically insulated, and constructed from carbon steel, SA-106 Grade B, with butt-welded or socket-welded joints. In addition, pipe supports consist of a combination of rigid struts and U-bolt brackets, floor-mounted stanchions, and spring or rod hangers. The as-installed configurations are inherently rugged and are similar to those found in the earthquake experience database facilities that have performed well during past earthquakes.

The piping systems within the MSIV Seismic Verification Boundary were divided into the following 15 portions for walkdown purposes:

1. Main Steam Drain Line, Reactor Building Portion
2. HPCI/RCIC drains
3. Main Steam Drain Line, Turbine Building Portion
4. - 7. Main Steam lines from the MSIV's to MSV's
8. Main Steam bypass and V-28
9. Main Steam Drip Leg Drains to Condenser
10. MainSteam Pressure Averaging Manifold
11. Main Steam Stop and Control Valve above seat drains
12. Main Steam Pressure Transmitters/Vents
13. MSR/RFP/SJAE Drains
14. Condenser
15. Main Steam Sample Line

Conditions not meeting the Seismic Verification Review guidelines, as discussed in Section 3.1 of this report, were identified and documented as "Outliers" for further evaluation and resolution by the Seismic Walkdown Teams. These conditions included limited numbers of piping overspans, equipment anchorage or support integrity issues, proximity or falling interaction concerns, flexibility concerns due to seismic anchor movements or differential displacements, boundary valve integrity issues, and general maintenance or housekeeping items. Table 3-3 presents a summary of MSIV walkdown outliers.

Table 3-1

BRUNSWICK UNIT 1 MSIV LEAKAGE BOUNDARY FLOW DIAGRAMS

Drawing Number	System Description
D-25021 Sh. 1A	Nuclear Steam Supply System
D-25021 Sh. 1B	Nuclear Steam Supply System
D-20020 Sh. 1	Main Steam, Turbine Bypass & Reheater Protection Steam Systems
D-20020 Sh. 2	Main Steam, Turbine Bypass & Reheater Protection Steam Systems
D-20028 Sh. 1	Main Turbine & RFP Turbine H.P. Steam Drains
D-20029 Sh. 2A	Main Turbine & RFP Turbine H.P. Steam Drains
D-25023 Sh. 2	High Pressure Coolant Injection System
D-25029 Sh. 1	Reactor Core Isolation Cooling System

Table 3-2

BRUNSWICK UNIT 1 MSIV LEAKAGE BOUNDARY POINTS

Leakage Boundary Point	Piping Diagram Drawing	Comment
1-B21-F028A	D-25021 Sh. 1B	MSIV for 1-MS-3-24-A-1 (Steam Line A) – Seismic Q-Class A
1-B21-F028B	D-25021 Sh. 1B	MSIV for 1-MS-4-24-A-1 (Steam Line B) – Seismic Q-Class A
1-B21-F019	D-25021 Sh. 1B	Containment isolation valve for primary containment steam drains. Auto closure on Group 1 PCIS - Seismic Q-Class A
1-MVD-F034	D-25021 Sh. 1B	Normally closed manual isolation valve.
1-B21-F028C	D-25021 Sh. 1A	MSIV for 1-MS-1-24-A-1 (Steam Line C) – Seismic Q-Class A
1-B21-F028D	D-25021 Sh. 1A	MSIV for 1-MS-2-24-A-1 (Steam Line D) – Seismic Q-Class A
1-MS-BPV-1 1-MS-BPV-2 1-MS-BPV-3 1-MS-BPV-4	D-20020 Sh. 1	Steam Chest 1A By-Pass Valves
1-MS-V28	D-20020 Sh. 1	Auxiliary Steam Header Motor Operated Isolation Valve
1-MS-V15	D-20020 Sh. 1	Sampling System Manual Isolation Valve
1-MS-SV-1	D-20020 Sh. 2	Main Turbine Stop Valve for 1-MS-1-24-A-1 (Steam Line C)
1-MS-SV-2	D-20020 Sh. 2	Main Turbine Stop Valve for 1-MS-2-24-A-1 (Steam Line D)
1-MS-SV-3	D-20020 Sh. 2	Main Turbine Stop Valve for 1-MS-3-24-A-1 (Steam Line A)
1-MS-SV-4	D-20020 Sh. 2	Main Turbine Stop Valve for 1-MS-4-24-A-1 (Steam Line B)
1-MS-66-3-A-1	D-20020 Sh. 2	Pressure Averaging Manifold
1-MS-V43	D-20028 Sh. 1	Normally closed motor operated drain valve
1-MS-V44	D-20028 Sh. 1	Normally closed motor operated drain valve
1-MS-V45	D-20028 Sh. 1	Normally closed motor operated drain valve
1-MS-RSDV-1	D-20028 Sh. 1	Normally closed motor operated isolation valve
1-MS-RSDV-2	D-20028 Sh. 1	Normally closed motor operated isolation valve
Condenser	D-20028 Sh. 1	Connections 58,59 and 78 Condenser is the ultimate boundary for the MSIV leakage path.
Miscellaneous test, vent, drain and instrument connections	D-20028 Sh. 1 D-20020 Sh. 2 D-20020 Sh. 1 D-25021 Sh. 1A D-25021 Sh. 1B	
1-E51-F026	D-25029 Sh. 1	Normally open motor operated RCIC Steam Drain Pot drain isolation valve. Seismic Q-Class B
1-E41-F029	D-25023 Sh. 2	Normally open motor operated HPCI Steam Drain Pot drain isolation valve. Seismic Q-Class A
1-MVD-S1	D-20029 Sh. 2A	Normally open motor operated isolation valve. To main turbine steam seal system.
1-MVD-S2	D-20029 Sh. 2A	Normally closed motor operated steam seal by-pass valve.

Table 3-3

BRUNSWICK UNIT 1
MSIV WALKDOWN "OUTLIERS"

SYSTEM DESCRIPTION	ID[1]	OUTLIER[2]	A	F	P	D	V
Main Steam Drains - MSIV Pit	1						
1-MVD-326-2-E-5 HPCI/RCIC Drains	1.1	Dead Load (DL) span > B31.1	X				
MS-F038A to D, F019 & F021	1.2	Extended Valve Operators					X
HPCI/RCIC Drain - MSIV Pit	2						
1-MVD-326-2-E-5	2.1	DL span exceeds B31.1	X				
Valve 1-E51-F026	2.2	Extended Valve Operators					X
Valve 1-E41-F029	2.3	Extended Valve Operators					X
Main Steam Drain to Condenser	3						
1-MVD-254-3-E-5	3.1	DL span exceeds B31.1	X				
Main Steam Line 1	4						
MS Stop Valve 1-MS-SV-1	4.1	Valve Performance					X
Main Steam Line 2	5						
MS Stop Valve 1-MS-SV-2	5.1	Valve Performance					X
Main Steam Line 3	6						
MS Stop Valve 1-MS-SV-3	6.1	Valve Performance					X
Main Steam Line 4	7						
MS Stop Valve 1-MS-SV-4	7.1	Valve Performance					X

Table 3-3 (Continued)

BRUNSWICK UNIT 1
MSIV WALKDOWN "OUTLIERS"

SYSTEM DESCRIPTION	ID[1]	OUTLIER[2]	A	F	P	D	V
Main Steam Bypass / V-28	8						
Main Steam Bypass Valve	8.1	Valve Performance					X
MS Drip Leg Drains to Condenser	9						
Lines from 1- MS-V46 to 49	9.1	Inadequate bending leg to header				X	
1-MVD-V5005 (new)	9.2	Valve Performance					X
MS Press Averaging Manifold	10	None					
CV Above Seat Drains/Gland Seals	11						
Stop Valve 1 to V88 to PT-EPT-3	11.1	Line is outside seismic boundary	X				
Steam to Gland Seal System	11.2	Heavy valves in pipe span	X				
1-MS-SSFV in Gland Seal System	11.3	Large eccentric mass	X				
Steam to Gland Seal System	11.4	Limited piping flexibility				X	
Valve 1-MVD-S1	11.5	Extended Valve Operator					X
1-MS-V56 to V59 - Stop Valve Drains	11.6	DL span exceeds B31.1	X				
MS Pressure Trans N015 & Vents	12						
MS instrument tubing	12.1	Interaction with floor gratings			X		

Table 3-3 (Continued)

BRUNSWICK UNIT 1
MSIV WALKDOWN "OUTLIERS"

SYSTEM DESCRIPTION	ID[1]	OUTLIER[2]	A	F	P	D	V
MSR/RFP/SJAE Drains	13						
1-MVD-162-1-A-1	13.1	DL span exceeds B31.1	X				
1-MS-V43-45 & MS-RSDV-1 and –2	13.2	Support of valve operators	X				
Lines to 1-MS-V43-45 & RSDV-1, -2	13.3	Inadequate bending leg to header				X	
Line to 1-MS-RSDV-2	13.4	Line is outside seismic boundary			X		
Condenser	14						
Condenser 1A & 1B	14.1	Evaluate condenser and anchorage	X				
Main Steam Sample- V15 to Station	15	None					

KEY TO ISSUES:

- A Anchorage or Support Capacity
- F Failure and Falling (II/I)
- P Proximity and Impact
- D Differential Displacement
- V Valve Screening

NOTES:

1 – ID - Refers to MSIV Walkdown package identifier.
2 - "Outliers" are plant conditions which require further evaluation.

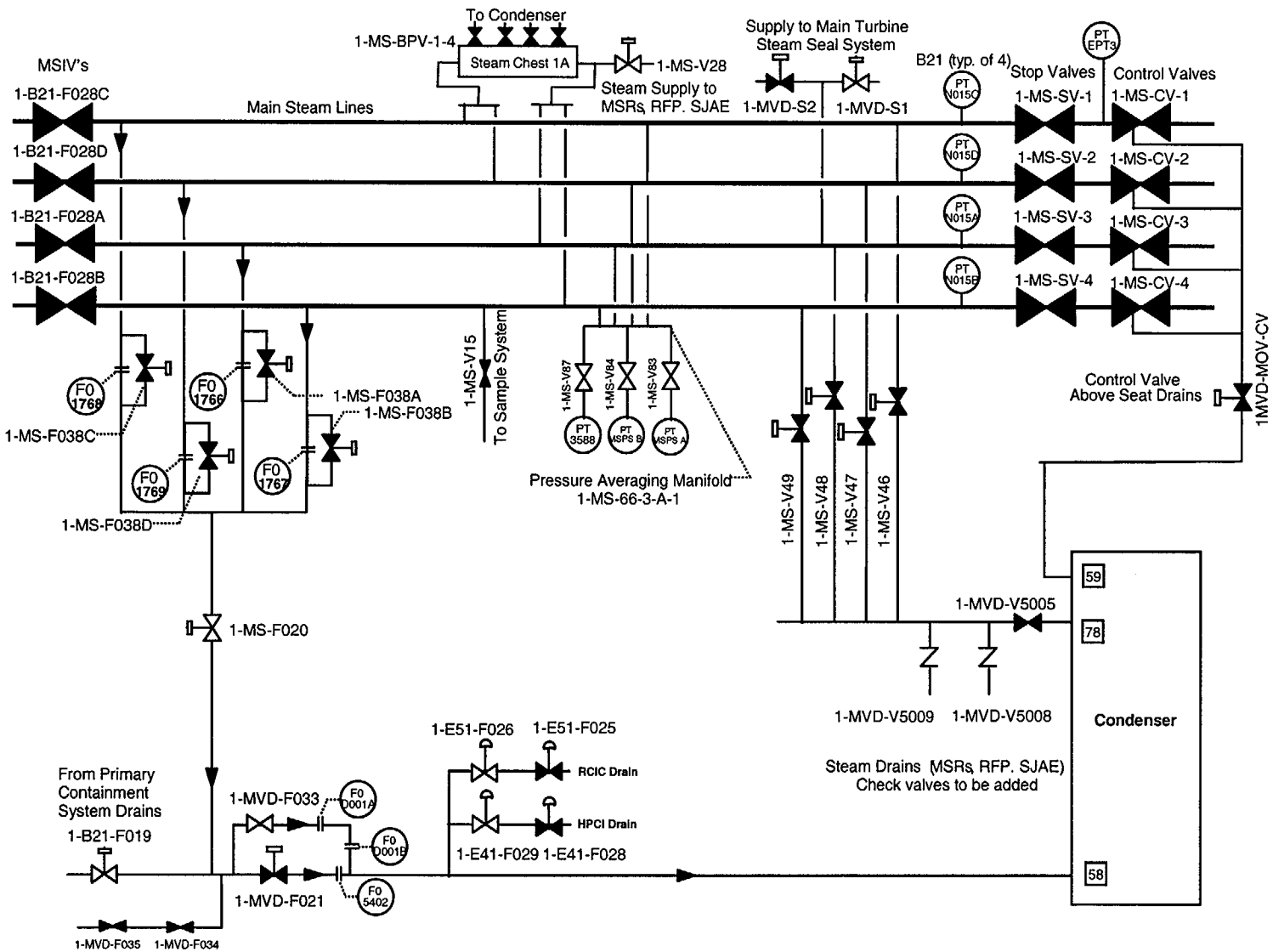

Figure 3-1: Brunswick MSIV Seismic Verification Boundary

4. Seismic Assessments

As part of the supplemental plant specific seismic verification program to support the Alternative Source Term tech spec change at Brunswick, various engineering evaluations and assessments were performed to verify the seismic adequacy of the Alternate Leakage Treatment (ALT) piping, related components and supports, and condensers. The following sections discuss the technical bases and methods used in these evaluations and assessments. Results of the seismic evaluations are also presented.

4.1 Outlier Resolution

Conditions which did not meet the walkdown screening guidelines (Section 3.1) or which were judged by the Seismic Walkdown Team to require further review were documented as "Outliers" during the Unit 1 Seismic Verification Walkdown at Brunswick Nuclear Plant. The walkdown outliers have been resolved on a deterministic basis and dispositioned as described in more detail below. The outlier resolutions are documented in the respective EQE calculations (References 6 to 10).

4.1.1 Seismic Demand

The Brunswick Turbine Building is classified as a Class II structure, hence, no dynamic analysis of the building was performed and no in-structure response spectra were available for the structure. For seismic evaluations and outlier resolution, the horizontal seismic demand for components located within about 40 feet of the Turbine Building effective grade elevation (EL. 20') is conservatively taken as the Brunswick 5% damped design basis DBE input spectrum scaled by 1.5 for building amplification per the GIP. In the vertical direction, seismic demand is taken as 2/3 that of the horizontal direction.

4.1.2 Seismic Capacity

For outlier resolution and evaluation of ALT piping, and related components and supports, the following load combinations and stress allowables, as applicable, were used:

Component	Load Combination	Stress Allowables
Piping	D + P + I + A (Primary + Secondary)	2.4 S_h or 0.7 S_U
Pipe Supports	D + T + I + A	1.7 S and/or AISC Part II
Equipment Anchorage	D + I	AISC, GIP
Valve	3g load check	GIP

where,
D – Dead load
P – Pressure load
T – Thermal load
I – Seismic (DBE) inertial load
A – Load due to seismic anchor movement
S_u – Material ultimate strength at temperature
S_h – Basic Material Allowable at maximum temperature
S – Basic Material Allowable
AISC – American Institute of Steel Construction
GIP – Generic Implementation Procedure

Table 4-1 provides a summary of the proposed resolution methods for the outliers associated with the MSIV Seismic Verification Walkdown. Conditions that have not been demonstrated to be acceptable are recommended for modification as indicated.

4.2 Turbine Building

Performance of the turbine building and other non-seismic structures during a seismic event is of interest to the MSIV leakage issue only to the extent that the building structure and its internal components should survive and not degrade the capabilities of the selected main steam and condenser pathways. A BWROG (Reference 1) survey of this type of industrial structures has, in general, confirmed that excellent past seismic performance exists. There are no known cases of structural collapse of either turbine buildings at power stations or structures of similar construction.

The majority of the MSIV alternate leakage treatment (ALT) piping and the condensers at Brunswick are located in the Turbine Building, while small portions of the ALT piping are located in the Reactor Building which is a seismically designed, Class I structure. Brunswick Turbine Building is classified as a Class II structure in the Brunswick FSAR. The Brunswick Design Criteria for Class II structures are that they shall not degrade the integrity of any Class I structure. Those portions of Class II structures required to remain structurally competent in order to support the operation of Class I structures or equipment shall be designed for earthquake in accordance to the Uniform Building Code.

The Turbine Building is supported on spread footings founded on structural backfill and it is constructed of reinforced concrete up to and including the operating floor at Elevation 70'-0". Reinforced concrete shield walls are provided above this floor for radiation protection. The superstructure above the operating floor is a steel framed crane bay with panel siding and roof constructed of metal deck, insulation, and built-up roofing (Reference 12).

The north-south tunnel adjacent to the Control Building was designed to Seismic Class II criteria and checked for Seismic Class I criteria to ensure that the Control Building would not be endangered by a failure of the tunnel.

The Turbine Building is designed for both UBC seismic and wind loadings. Table 4-2 provides the design basis of the Brunswick Turbine Building and the applicable design

codes used. The Turbine Building design is controlled by hurricane wind loads (Reference 4). The structure design lateral shear and overturning moment loads are compared with the UBC seismic as well as the DBE seismic loads in Figure 4-1. The design hurricane wind lateral shear and moment loads are substantially greater than the seismic UBC and DBE loads at most structure elevations. The small (less than 9%) difference between DBE base shear and the design shear load could result in some localized cracking of the concrete structures at the lowest elevations. However, seismic design margins against collapse for structures designed to commercial codes and standards are typically large and in the order of 1.5 times design ground motions (Reference 13). Due to the substantial margins inherent in code designs, structural failure and collapse of the Turbine Building under DBE loads is not expected.

Based on the above design bases for the Brunswick Turbine Building, and the excellent seismic performance of this similar type of industrial structure in past strong-motion earthquakes as documented in the BWROG Report, the Brunswick Turbine Building is expected to remain structurally intact following a DBE.

4.3 Alternate Leakage Treatment Piping and Supports

Majority of the MSIV alternate leakage treatment (ALT) piping systems and related components at Brunswick, i.e., those portions downstream of the outboard Main Steam Isolation Valves (MSIV's) are located in the Turbine Building and are not designated as Seismic Class I systems. In general, these piping systems are not seismically analyzed, and are typically designed to the requirements of USAS B31.1.

As part of the plant specific seismic verification of the non-seismic ALT piping, related supports and components using the earthquake experience-based approach as outlined in the BWROG Report, the following reviews were performed to demonstrate that the piping and related supports fall within the bounds of the experience database:

- Review of the design codes and standards, piping design parameters, and support configurations.

- Seismic verification walkdown to identify potential piping concerns.

The Brunswick ALT piping systems consist of welded steel pipe and standard support components. Support spacing generally meets the B31.1 recommended span. The design bases for the portions of piping associated with the ALT pathway to the condensers are tabulated in Table 4-3 (Reference 11). Table 4-4 presents a general summary of the piping data that constitute the seismic experience data. Comparison of Brunswick and selected database piping parameters is presented in Table 4-5, along with Figure 4-2, which presents a comparison of D/t ratios of the Brunswick ALT drain piping with those found in the database. Overall, the Brunswick piping design is similar to and well represented by those found in the experience database sites that have shown to perform well in past earthquakes.

The seismic adequacy of the ALT piping is addressed by performing seismic verification walkdowns to identify specific design attributes associated with poor seismic performance, following the guidelines outlined in Section 3.1 of this report. Bounding evaluations were performed for typical support configurations using evaluation criteria as discussed in Section 4.1. Supports and anchorages were evaluated using conservative deterministic methods by support type in groups. Bounding evaluations were performed for typical configurations and the results, as presented in Table 4-6, indicate the supports have capacities in excess of calculated demand (Reference 8).

The seismic evaluations, consisting of verification walkdowns, bounding support evaluations, and resolution of the identified walkdown outliers, provide reasonable assurance that the ALT drain path piping, related supports and components will remain functional in the event of a Design Basis Earthquake (DBE) at Brunswick.

4.4 Condenser

The Brunswick condenser is a single-pass, single pressure surface condenser (References 14 and 15). Table 4-7 lists the design data for Brunswick condensers and for the Moss Landing experience database site listed in the BWROG Report. In

addition, design characteristic comparisons of the Brunswick condenser with the selected database condenser is shown in Figures 4-3 to 4-6. The Brunswick condenser design data is comparable to the data for the database site. Furthermore, Brunswick condensers were also evaluated for structural integrity subject to seismic DBE loads. Results of the evaluation indicate that the condenser shell stresses are small, based on AISC allowables (Reference 16).

The condenser support anchorage consists of a center-side fixed support and five support feet that are arranged as shown in Figure 4-7. The fixed center-side fixed support (Support 4) is anchored to a sole plate at the Turbine Building base mat and welded to the bottom plate of the condenser. The sole plate is anchored to the base mat with six (6) 7/8 inch diameter cast-in-place bolts. The four corner supports (Supports 1, 2, 5 & 6) are anchored by eight (8) 1-3/4 inch diameter bolts cast into the base mat. Each anchor bolt has greater than 5 feet nominal length with approximately 48 inches of embedment into the concrete base mat. The other center support (Support 3) consists of three anchor chairs with 1 ¾ and 2 inch diameter anchor bolts. The corner supports (Supports 1, 2, 5, & 6) are designed to resist vertical operating loads, and are oversized to allow for thermal growth. Both center supports (Supports 3 & 4) are also designed to resist vertical loads as well. In addition, the Support 3 also has a guided key that acts to resist shear forces along the longitudinal axis of the condenser. Shear forces are transferred to the anchor Support 4 and to Support 3 and carried through the concrete to the Turbine Building base mat.

The Brunswick condenser anchorage was compared with the performance of condensers in the earthquake experience database. The shear areas of the condenser anchorage, in the directions parallel and transverse to the turbine generator axis, divided by the seismic demand, were used to compare with those presented in the BWROG Report (Reference 1), and are shown in Figures 4-8 and 4-9, respectively. The Brunswick condenser anchorage shear area to seismic demand is substantially greater than the selected database sites. The condenser support load demand (combined seismic DBE and operational; horizontal shears and vertical uplift) is less than the total available anchorage capacity based on AISC allowables.

The above comparisons of the condenser seismic experience data and the anchorage capacity evaluations demonstrate that the conclusions presented in the BWROG Report (Reference 1) can be applied to the Brunswick condensers. That is, a significant failure of the condenser in the event of a DBE at Brunswick is highly unlikely and contrary to the body of historical earthquake experience data.

Table 4-1

BRUNSWICK
MSIV "OUTLIERS" RESOLUTION SUMMARY

SYSTEM DESCRIPTION	ID	OUTLIER	RESOLUTION METHOD
Main Steam Drains - MSIV Pit	1		
1-MVD-326-2-E-5 HPCI/RCIC Dr.	1.1	Dead Load (DL) span > B31.1	Resolved per EQE Calc. No. 50171-C-001 (Ref. 6)
MS-F038A to D, F019 & F021	1.2	Extended Valve Operators	Resolved per EQE Calc. No. 50171-C-001 (Ref. 6)
HPCI/RCIC Drain - MSIV Pit	2		
1-MVD-326-2-E-5	2.1	DL span exceeds B31.1	Resolved per EQE Calc. No. 50171-C-001 (Ref. 6)
Valve 1-E51-F026	2.2	Extended Valve Operators	Resolved per EQE Calc. No. 50171-C-001 (Ref. 6)
Valve 1-E41-F029	2.3	Extended Valve Operators	Resolved per EQE Calc. No. 50171-C-001 (Ref. 6)
Main Steam Drain to Condenser	3		
1-MVD-254-3-E-5	3.1	DL span exceeds B31.1	Add new support per EQE Calc. No. 50171-C-005 (Ref. 10)
Main Steam Line 1	4		
MS Stop Valve 1-MS-SV-1	4.1	Valve Performance	Resolved per EQE Calc. No. 50171-C-002 (Reference 7)
Main Steam Line 2	5		
MS Stop Valve 1-MS-SV-2	5.1	Valve Performance	Resolved per EQE Calc. No. 50171-C-002 (Reference 7)
Main Steam Line 3	6		
MS Stop Valve 1-MS-SV-3	6.1	Valve Performance	Resolved per EQE Calc. No. 50171-C-002 (Reference 7)

Table 4-1 (Continued)

BRUNSWICK
MSIV "OUTLIERS" RESOLUTION SUMMARY

SYSTEM DESCRIPTION	ID	OUTLIER	RESOLUTION METHOD
Main Steam Line 4	7		
MS Stop Valve 1-MS-SV-4	7.1	Valve Performance	Resolved per EQE Calc. No. 50171-C-002 (Reference 7)
Main Steam Bypass / V-28	8		
Main Steam Bypass Valve	8.1	Valve Performance	Resolved per EQE Calc. No. 50171-C-002 (Reference 7)
MS Drip Leg Drains to Condenser	9		
Lines from 1- MS-V46 to 49	9.1	Inadequate bending leg to header	Add new supports per EQE Calc. No. 50171-C-005 (Ref. 10)
1-MVD-V5005	9.2	Valve Performance	Resolved per Brunswick Calc. 0COND-0004 (Ref. 16)
MS Press Averaging Manifold	10	None	N/A
CV Above Seat Drains/Gland Seals	11		
Stop Valve 1 to V88 to PT-EPT-3	11.1	Line is outside seismic boundary	Not Applicable
Steam to Gland Seal System	11.2	Heavy valves in pipe span	Resolved per EQE Calc. No. 50171-C-001 (Ref. 6)
1-MS-SSFV in Gland Seal Sys.	11.3	Large eccentric mass	Resolved per EQE Calc. No. 50171-C-001 (Ref. 6)
Steam to Gland Seal System	11.4	Limited piping flexibility	Plant modifications per EQE Calc. No. 50171-C-005 (Ref. 10)
Valve 1-MVD-S1	11.5	Extended Valve Operator	Resolved per EQE Calc. No. 50171-C-001 (Ref. 6)
1-MS V56 to V59 - Stop Valve Drains	11.6	DL span exceeds B31.1	Resolved per EQE Calc. No. 50171-C-001 (Ref. 6)

Table 4-1 (Continued)

BRUNSWICK
MSIV "OUTLIERS" RESOLUTION SUMMARY

SYSTEM DESCRIPTION	ID	OUTLIER	RESOLUTION METHOD
MS Pressure Trans N015 & Vents	12		
MS instrument tubing	12.1	Interaction with floor gratings	Plant modifications per EQE Calc. No. 50171-C-005 (Ref. 10)
MSR/RFP/SJAE Drains	13		
1-MVD-162-1-A-1	13.1	DL span exceeds B31.1	Resolved per EQE Calc. No. 50171-C-001 (Ref. 6)
1-MS-V43-45 & MS-RSDV-1 and -2	13.2	Support of valve operators	Addition of spring check valves 1-MVD-V5008 & V5009 to isolate RFP, MSR and SJAE drains, per EQE Calc. No. 50171-C-001 (Ref. 6)
Lines to 1-MS-V43-45 & MS-RSDV-1, -2	13.3	Inadequate bending leg to header	Addition of spring check valves 1-MVD-V5008 & V5009 to isolate RFP, MSR and SJAE drains, per EQE Calc. No. 50171-C-001 (Ref. 6)
Line to 1-MS-RSDV-2	13.4	Line is outside seismic boundary	Not Applicable
Condenser	14		
Condenser 1A & 1B	14.1	Evaluate condenser and anchorage	Resolved per EQE Calc. No. 50171-C-004 (Ref. 9) and Brunswick Calc. 0COND-0004 (Ref. 16)
Main Steam Sample- V15 to Station	15	None	N/A

Table 4-2

BRUNSWICK TURBINE BUILDING DESIGN BASIS

Design Attribute	Description
Lateral Force Resisting System Above the Operating Deck	The Turbine Building superstructure above the operating deck is a steel framed crane bay with panel siding and roof constructed of metal deck, insulation, and built-up roofing..
Lateral Force Resisting System Below the Operating Deck	The Turbine Building is supported on spread footings founded on structural backfill and it is constructed of reinforced concrete up to and including the operating floor at Elevation 70'-0".
Design Codes	General: Uniform Building Code (UBC) 1967 North Carolina Building Code Concrete: American Concrete Institute (ACI 318-1963) Steel: American Institute of Steel Construction (AISC) –1963
Seismic Design Basis	UBC Zone 1 (0.08g)
Wind Design Basis	ASCE Paper No. 3269 "Wind Design Forces on Structures" Fastest wind speed with a 100 year recurrence period.

Table 4-3

DESIGN BASIS FOR BRUNSWICK ALT RELATED PIPING AND SUPPORTS

Piping Description	Pipe Size (NPS)	Pipe O.D. (inch)	Pipe Schedule	Wall Thickness (inch)	D / t	Piping Material	Piping Design Basis
Brunswick Main Steam System Lines, Drains, & Vents	24	24.0	80	1.218	20	SA-106 or A-106 Gr. B or SA-333 or A-333 Gr. 6	USAS B31.1
	16	16.0	80	0.844	19		
	10	10.75	100	0.719	15		
	6	6.625	80	0.432	15		
	4	4.500	80	0.337	13		
	3	3.500	80	0.300	12		
	2	2.375	160	0.344	7		
	1-1/2	1.90	160	0.281	7		
	1	1.315	160	0.250	5		
	3/4	1.05	160	0.219	5		

Table 4-4

SEISMIC EXPERIENCE DATABASE PIPING DATA

Facility	Pipe Size (NPS)	Pipe O.D. (inch)	Pipe Schedule	Wall Thickness (inch)	D/t
Valley Steam Plant Units 1 & 2	24	24.0	20	0.375	64
	20	20.0	20	0.375	53
	18	18.0	30	0.437	41
	16	16.0	30	0.375	43
	14	14.0	30	0.375	37
	12	12.75	40	0.406	31
	12	12.75	30	0.330	39
	10	10.75	160	1.125	10
	8	8.625	160	0.906	10
	6	6.625	40	0.280	24
	4	4.50	160	0.531	8
	4	4.50	40	0.237	19
	3	3.50	160	0.437	8
	3	3.50	80	0.300	12
	3	3.50	40	0.216	16
	2	2.375	160	0.343	7
	2	2.375	40	0.154	15
	1½	1.90	160	0.281	7
	1½	1.90	40	0.145	13
	1	1.315	40	0.133	10
	¾	1.05	160	0.218	5
	¾	1.05	40	0.113	9

Table 4-4 (Continued)

SEISMIC EXPERIENCE DATABASE PIPING DATA

Facility	Pipe Size (NPS)	Pipe O.D. (inch)	Pipe Schedule	Wall Thickness (inch)	D/t
El Centro Steam Plant	20	20.0	STD	0.375	53
	18	18.0	160	1.781	10
	18	18.0	XS	0.500	36
	18	18.0	STD	0.375	48
	14	14.0	40	0.437	32
	14	14.0	STD	0.375	37
	12	12.75	160	1.312	10
	12	12.75	STD	0.375	34
	10	10.75	40	0.365	29
	8	8.625	160	0.906	10
	8	8.625	120	0.718	12
	8	8.625	40	0.322	27
	6	6.625	120	0.562	12
	6	6.625	40	0.280	24
	4	4.50	80	0.337	13
	4	4.50	40	0.237	19
	3	3.50	160	0.437	8
	3	3.50	80	0.300	12
	3	3.50	40	0.216	16
	2	2.375	160	0.343	7
	2	2.375	80	0.218	11
	2	2.375	40	0.154	15
	1½	1.90	160	0.281	7
	1½	1.90	80	0.200	10
	1½	1.90	40	0.145	13
	1	1.315	80	0.179	7
	1	1.315	40	0.133	10
	¾	1.05	80	0.154	7
	¾	1.05	40	0.113	9

Table 4-4 (Continued)

SEISMIC EXPERIENCE DATABASE PIPING DATA

Facility	Pipe Size (NPS)	Pipe O.D. (inch)	Pipe Schedule	Wall Thickness (inch)	D/t
Moss Landing Units 1, 2 & 3	16	16.0	--	1.394	11
	12	12.75	--	1.148	11
	8	8.625	160	0.906	10
	8	8.625	30	0.277	31
	6	6.625	160	0.562	12
	6	6.625	40	0.280	24
	4	4.50	160	0.531	8
	4	4.50	80	0.337	13
	4	4.50	40	0.237	19
	3	3.50	160	0.437	8
	3	3.50	80	0.300	12
	3	3.50	40	0.216	16
	2	2.375	160	0.343	7
	2	2.375	80	0.218	11
	2	2.375	40	0.154	15
	1½	1.90	160	0.281	7
	1½	1.90	80	0.200	10
	1	1.315	160	0.250	5
	1	1.315	80	0.179	7
	¾	1.05	160	0.218	5
	¾	1.05	80	0.154	7

Table 4-4 (Continued)

SEISMIC EXPERIENCE DATABASE PIPING DATA

Facility	Pipe Size (NPS)	Pipe O.D. (inch)	Pipe Schedule	Wall Thickness (inch)	D/t
Moss Landing Units 4 & 5	24	24.0	40	0.687	35
	24	24.0	--	1.066	23
	--	18.8	--	2.287	8
	16	16.0	40	0.500	32
	16	16.0	--	0.902	18
	--	13.2	--	1.668	8
	8	8.625	160	0.906	10
	8	8.625	40	0.322	27
	6	6.625	160	0.562	12
	6	6.625	40	0.280	24
	4	4.50	160	0.531	8
	4	4.50	80	0.337	13
	4	4.50	40	0.237	19
	3	3.50	160	0.437	8
	3	3.50	80	0.300	12
	3	3.50	40	0.216	16
	2	2.375	160	0.343	7
	2	2.375	80	0.218	11
	2	2.375	40	0.154	15
	1½	1.90	160	0.281	7
	1½	1.90	80	0.200	10
	1½	1.90	40	0.145	13
	1	1.315	160	0.250	5
	1	1.315	80	0.179	7
	1	1.315	40	0.133	10
	¾	1.05	160	0.218	5
	¾	1.05	80	0.154	7
	¾	1.05	40	0.113	9

Table 4-4 (Continued)

SEISMIC EXPERIENCE DATABASE PIPING DATA

Facility	Pipe Size (NPS)	Pipe O.D. (inch)	Pipe Schedule	Wall Thickness (inch)	D/t
Moss Landing Units 6 & 7	30	30.0	--	0.632	47
	26	26.0	--	1.128	23
	18	18.0	--	3.444	5
	12	12.75	--	2.444	5
	12	12.75	--	0.601	21
	8	8.625	--	1.650	5
	8	8.625	40	0.322	27
	6	6.625	--	1.268	5
	6	6.625	40	0.280	24
	4	4.50	--	0.861	5
	4	4.50	80	0.337	13
	4	4.50	40	0.237	19
	3	3.50	80	0.300	12
	3	3.50	40	0.216	16
	2½	2.875	--	0.550	5
	2½	2.875	80	0.276	10
	2½	2.875	40	0.178	16
	2	2.375	--	0.519	5
	2	2.375	80	0.218	11
	2	2.375	40	0.154	15
	1½	1.90	--	0.428	4
	1½	1.90	80	0.200	10
	1½	1.90	40	0.145	13
	1	1.315	--	0.301	4
	1	1.315	80	0.179	7
	1	1.315	40	0.133	10
	¾	1.05	160	0.218	5
	¾	1.05	80	0.154	7
	¾	1.05	40	0.113	9
	½	1.05	--	0.210	4
	¼	0.54	--	0.153	4

Table 4-4 (Continued)

SEISMIC EXPERIENCE DATABASE PIPING DATA

Facility	Pipe Size (NPS)	Pipe O.D. (inch)	Pipe Schedule	Wall Thickness (inch)	D/t
Humboldt Bay Unit 3	12	12.75	80	0.687	19
	10	10.75	80	0.593	18
	6	6.625	80	0.432	15

Table 4-5

COMPARISON OF BRUNSWICK AND SELECTED DATABASE PIPING PARAMETERS

Piping Parameter	Brunswick	Database Sites
Pipe Diameter (inch)	1.05 - 24.0	1.05 - 30.0
Wall Thickness (inch)	0.219 - 1.218	0.113 - 3.444
Diameter-to-Thickness Ratio (D/t)	5 - 20	4 - 64

Table 4-6

BOUNDING EVALUATIONS OF TYPICAL SUPPORT CONFIGURATIONS

Support Type	Critical Component	Stress Ratio
Eccentric Floor Stanchions	Bending - Structural Member	0.99
Cantilever Brackets-	Fabricated Pipe Strap	0.83
Cantilever Bracket - Rod Hanger	Weld	0.71

Table 4-7

COMPARISON OF BRUNSWICK AND SELECTED DATABASE CONDENSERS

Design Attributes	Moss Landing Units 6 & 7	Brunswick
Condenser Manufacturer	Ingersoll-Rand	Ingersoll-Rand
Flow Type	Single Pass	Single Pass
Condenser Dimensions (LxWxH)	65 ft. x 36 ft. x 47 ft.	48 ft. x 30 ft. x 40 ft.
Condenser Surface Area	435,000 sq. ft.	290,500 sq. ft.
Condenser Shell Material	Cu Bearing ASTM A-285C	ASTM A-285 Gr.C
Condenser Shell Thickness	3/4"	3/4"
Condenser Operating Weight	3,115 kips	2,091 kips
Tube Material	Al-Brass	Titanium
Tube Size	1" dia.	1" dia.
Tube Length	65 ft.	48 ft.
Tube Wall Thickness	18 BWG	22 BWG

Table 4-7 (Continued)

COMPARISON OF BRUNSWICK AND SELECTED DATABASE CONDENSERS

Design Attributes	Moss Landing Units 6 & 7	Brunswick
Number of Tubes	25,590	23,000
Tube Sheet Material	Muntz	Aluminum Bronze
Tube Sheet Thickness	1-1/2"	1-3/8"
No. of Tube Support Plates	15	15
Tube Support Plate Material	Not Given	ASTM A-285 Gr.C
Tube Support Plate Thickness	¾"	5/8"
Tube Support Plate Spacing	48 in.	37 1/2 in.
Water Box Material	2% Ni Cast Iron ASTM A-48 Class 30	ASTM A-285 Gr. C
Expansion Joint	Rubber Belt	Stainless Steel Type 304
Hotwell Capacity	20,000 gal.	34,800 gal (Normal Op.)

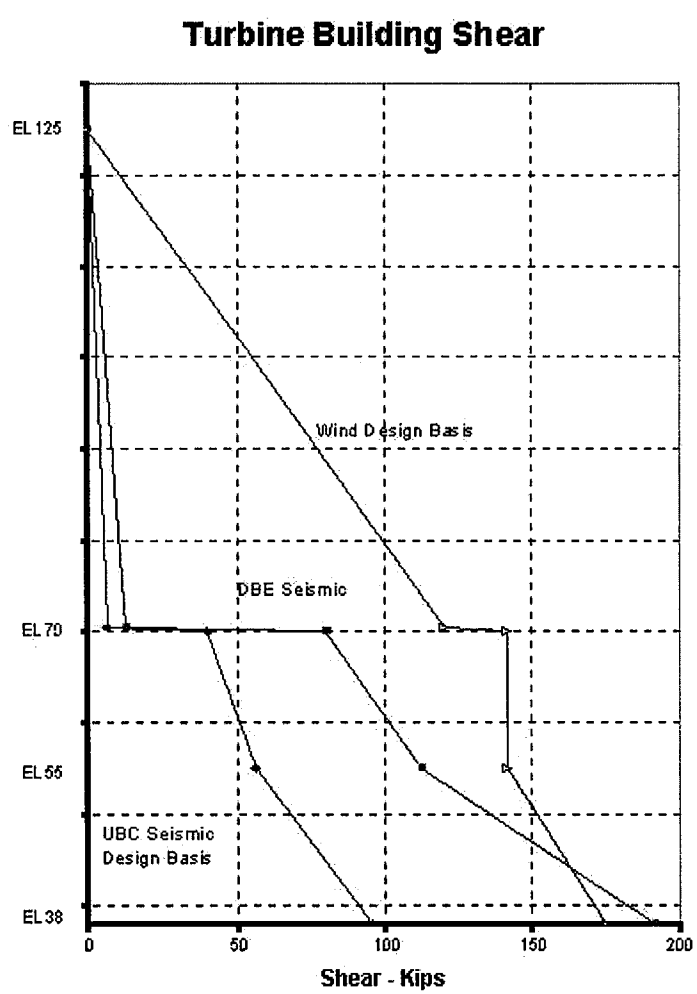

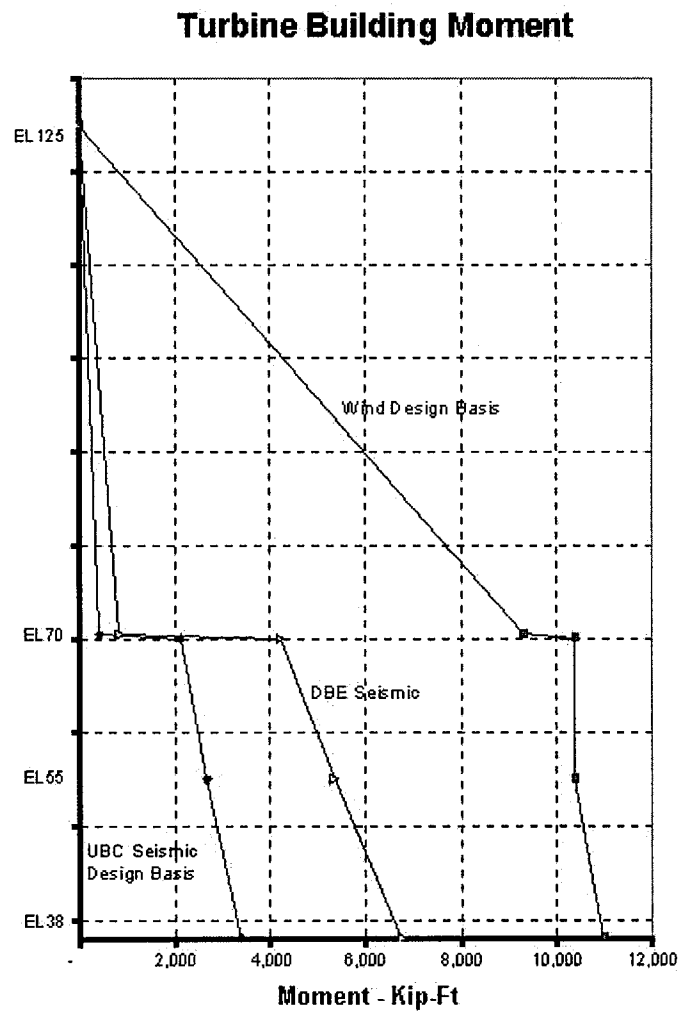

Figure 4-1: Comparison of Design Basis Wind with Seismic Lateral Shear and Moments for Brunswick Turbine Building

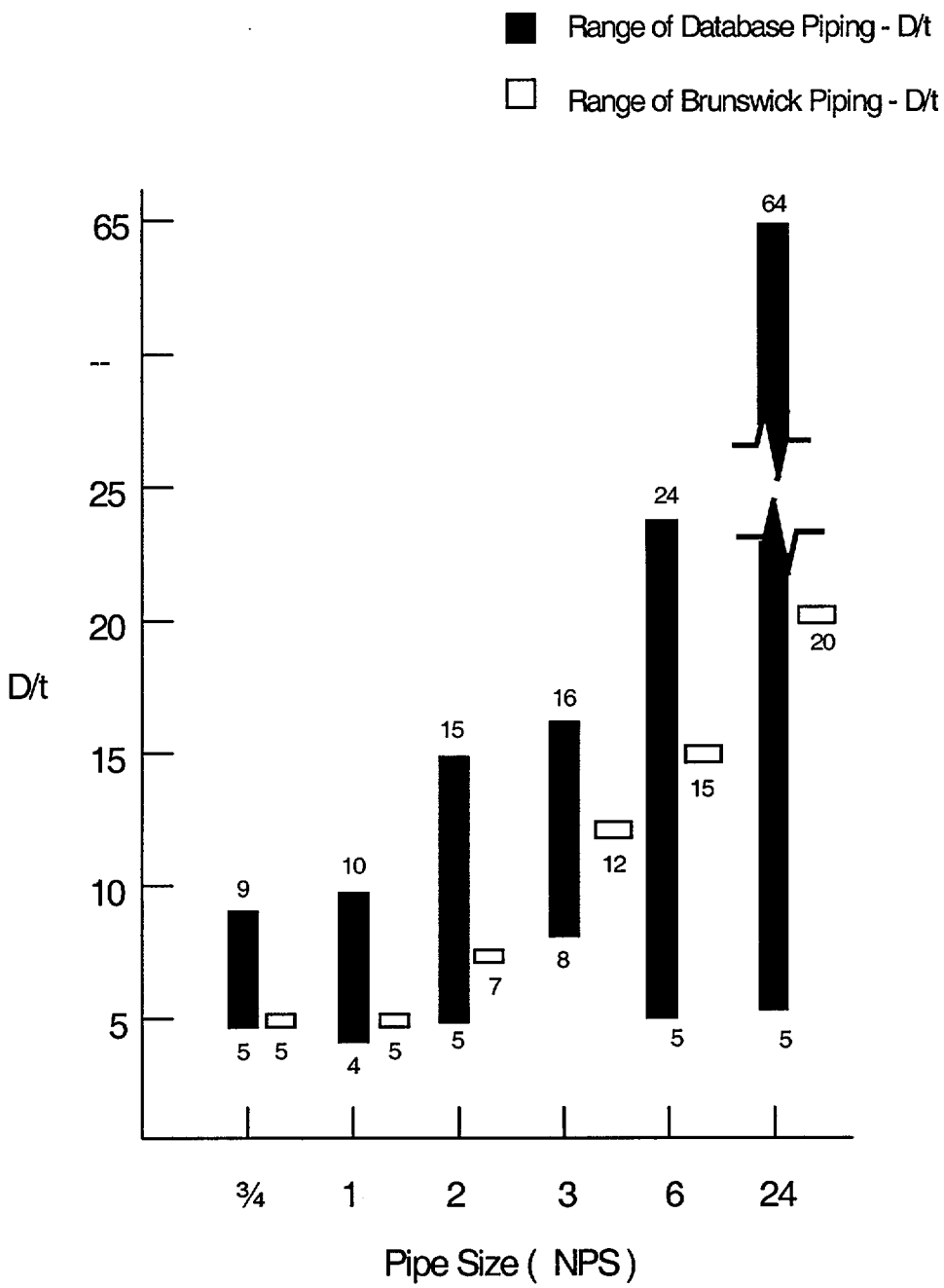

Figure 4-2: Comparison of Brunswick and Selected Database Piping D/t Ratios

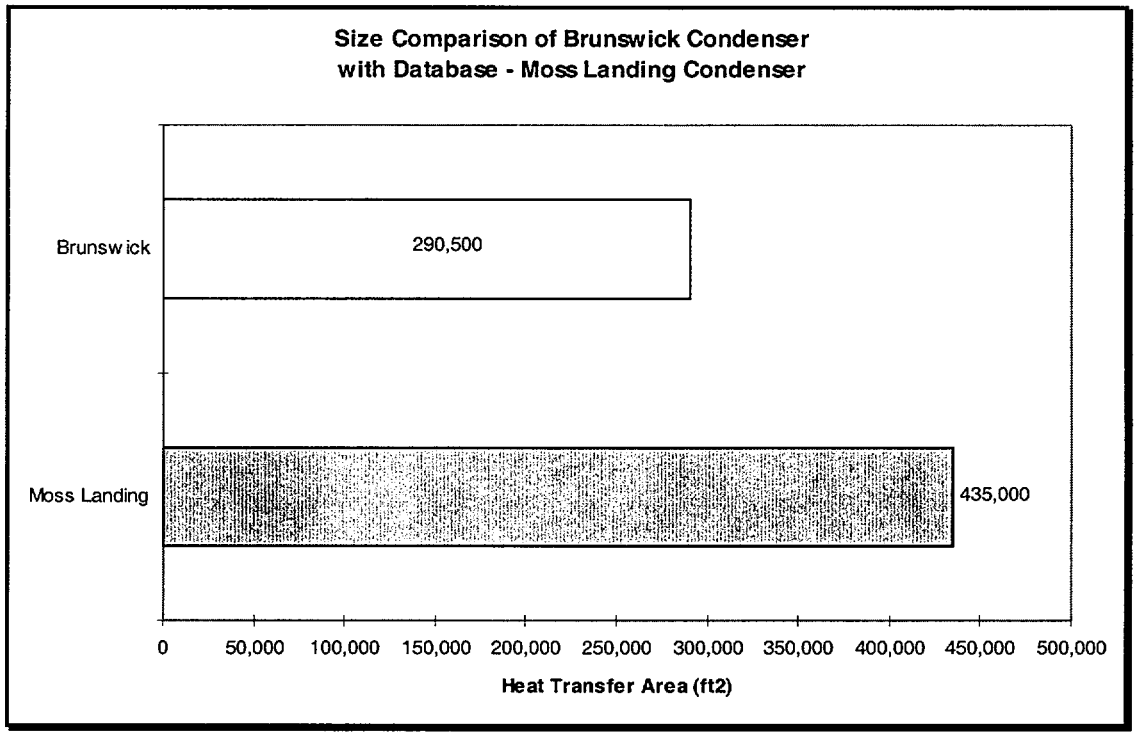

Figure 4-3: Size Comparison of Brunswick Condenser with Moss Landing Database Condensers

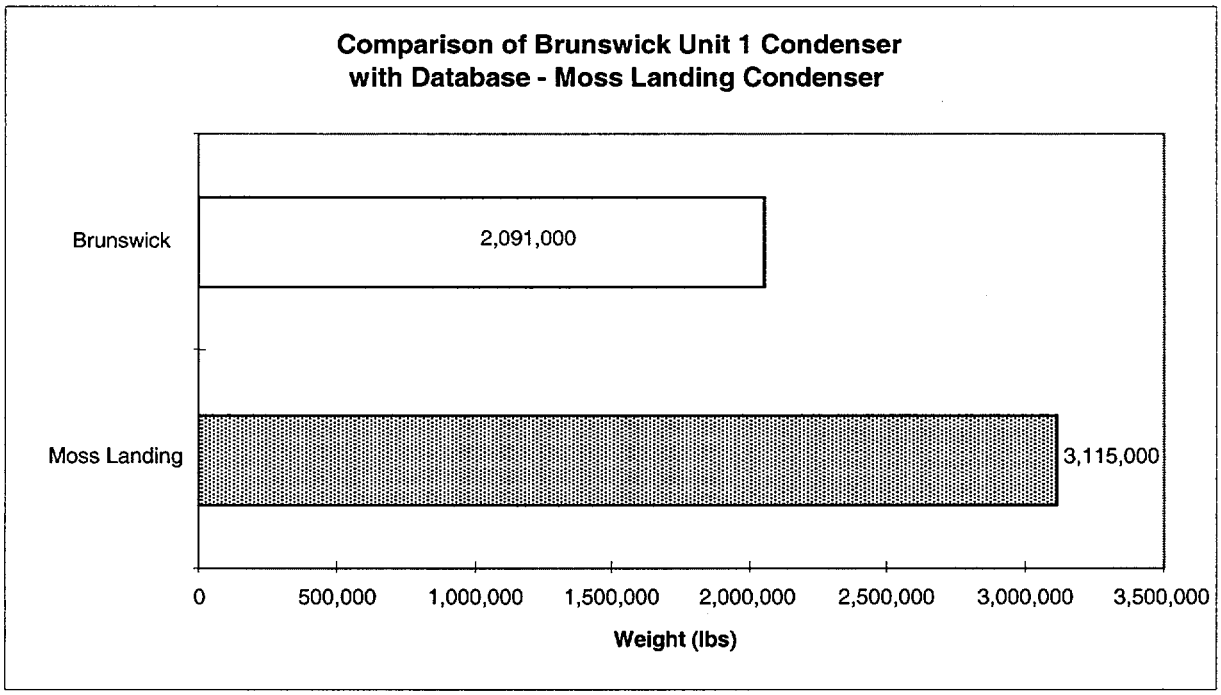

Figure 4-4: Weight Comparison of Brunswick Condenser with Moss Landing Database Condensers

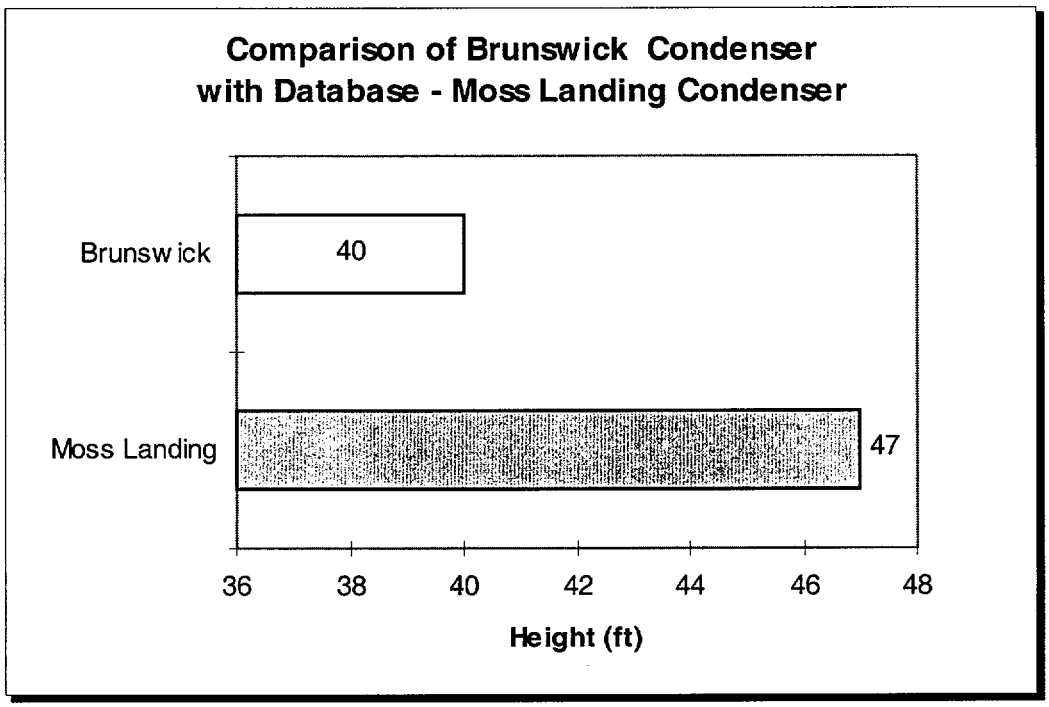

Figure 4-5: Height Comparison of Brunswick Condenser with Moss Landing Database Condensers

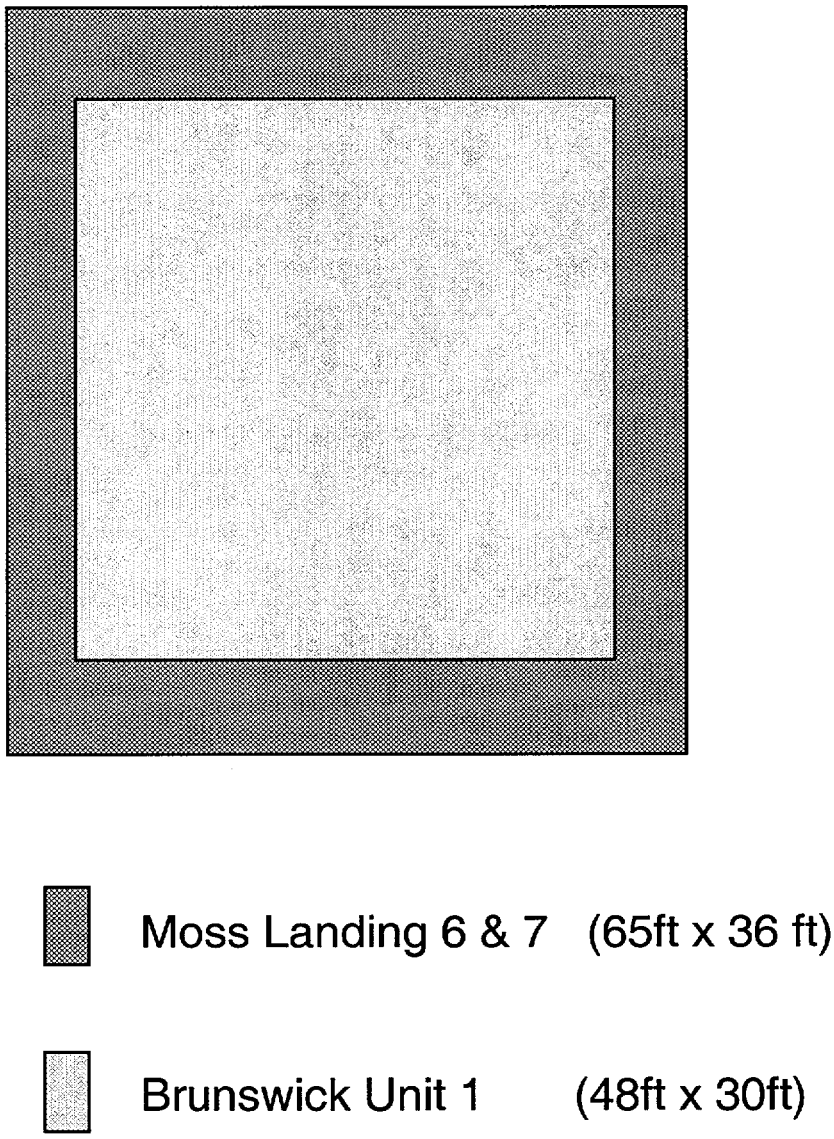

Figure 4-6: Plan Dimension Comparison of Brunswick Condenser with Moss Landing Database Condensers

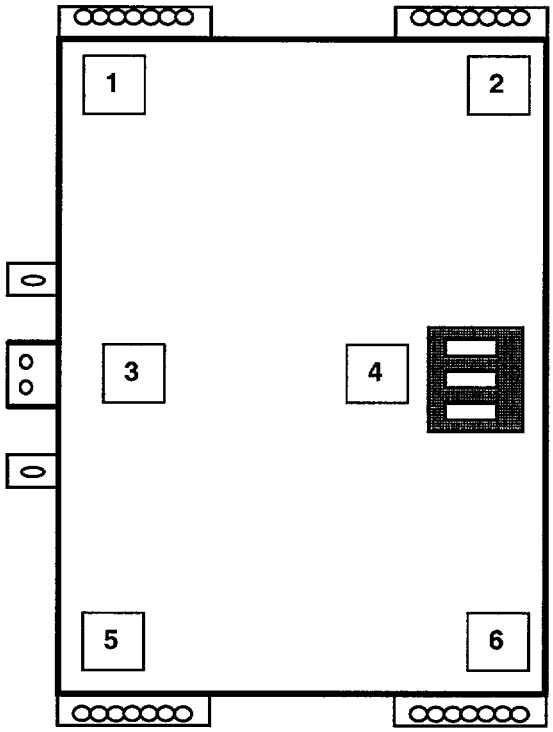

Sliding feet with eight bolts in oversized holes (supports 1, 2, 5 & 6)

Anchor chairs with slotted bolt holes (support 3)

Fixed anchor plate (support 4)

Sliding Foot with slotted bolt holes and side guide plates (support 3)

Figure 4-7: Schematic Plan View of Brunswick Condenser Anchorage

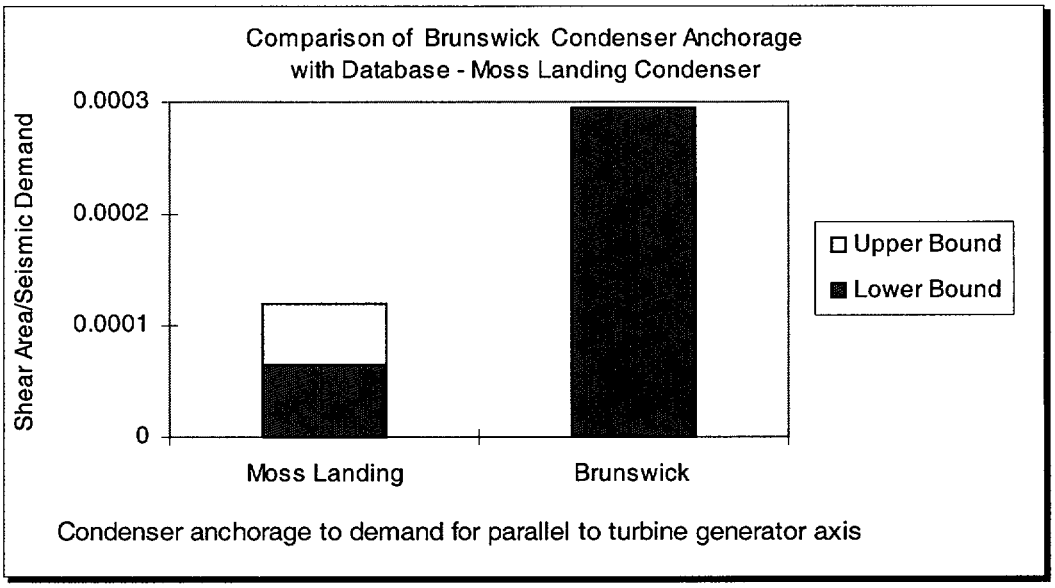

Note: Shear Area (in2) / Demand (condenser weight x g level)

Figure 4-8: Comparison of Brunswick and Moss Landing Database Condenser Anchorage to Seismic Demand for Direction Parallel to the Turbine Generator Axis

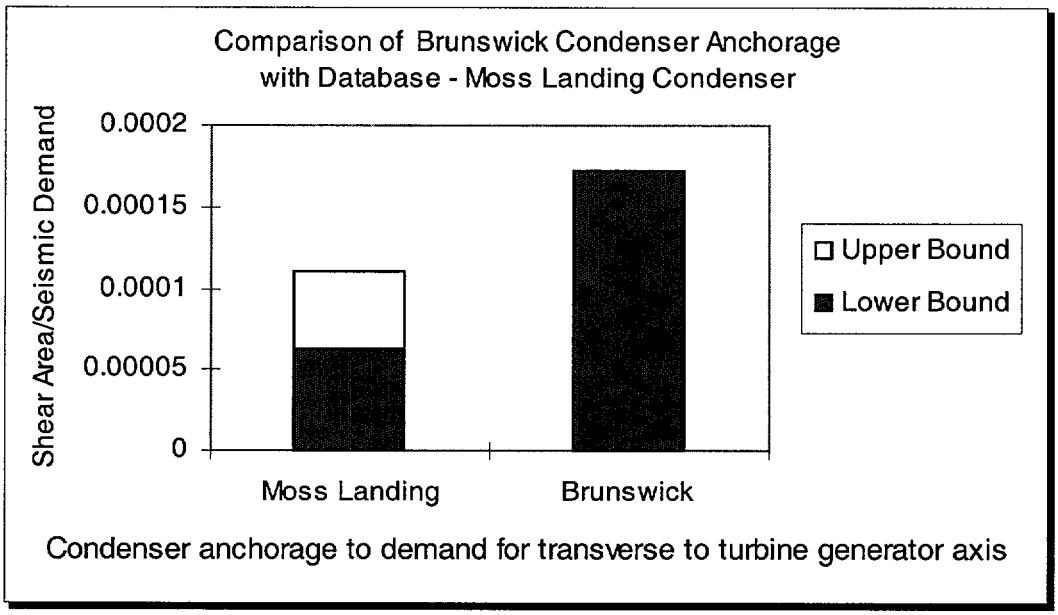

Note: Shear Area (in2) / Demand (condenser weight x g level)

Figure 4-9 Comparison of Brunswick and Moss Landing Database Condenser Anchorage to Seismic Demand for Direction Transverse to the Turbine Generator Axis

5. References

1. "BWROG Report for Increasing MSIV Leakage Rate Limits and Elimination of Leakage Control Systems", GE NEDC-31858P, Revision 2, September 1993.

2. Safety Evaluation of GE Topical Report, NEDC-31858P, Revision 2, "BWROG Report for Increasing MSIV Leakage Rate Limits and Elimination of Leakage Control Systems", U.S. Nuclear Regulatory Commission, March 3, 1999.

3. "Brunswick Unit 1 MSIV Seismic Verification Walkdown Report", EQE Report No. 50171-R-001, Revision 0, June 2001.

4. Brunswick Calculation No. 9527-1-TB-SC-02, "Turbine Building Wind and Seismic Load Structural Calculations", Book BP-9.

5. "Generic Implementation Procedure (GIP) for Seismic Verification of Nuclear Plant Equipment", Rev. 2A, March 1993, Prepared by Winston & Strawn, EQE, et al., for the Seismic Qualification Utility Group (SQUG).

6. EQE Calculation No. 50171-C-001, "Evaluation of BNP-1 MSIV Outliers", Revision 0.

7. EQE Calculation No. 50171-C-002, "Seismic Adequacy Verification of Main Steam Stop, Control and Bypass Valves and Associated Support Anchorage", Revision 0.

8. EQE Calculation No. 50171-C-003, "Main Steam Drain Line Support Evaluations", Revision 0.

9. EQE Calculation No. 50171-C-004, "Seismic Adequacy Verification of Condenser and Condenser Anchorage Capacity", Revision 0.

10. EQE Calculation No. 50171-C-005, "Design Modifications for Selected MSIV Outliers", Revision 0.

11. CP&L Specification No. 248-117, "Installation of Piping Systems".

12. CP&L Brunswick Nuclear Plant Design Basis Document DBD-58, "Structures System", Revision 5, April 11, 2000.

13. National Earthquake Hazards Reduction Program (NEHRP) Recommended Provisions for Seismic Regulations for New Buildings and Other Structures, 1997 Edition, Part 2 Commentary (FEMA 303), Building Seismic Safety Council for the Federal Emergency Management Agency (FEMA), February 1998.

14. UE&C Specification No. 9527-01-203-1, "Specification for Surface Condensers and Air Ejectors for CP&L Brunswick Units 1 & 2", August 28, 1969.

15. CP&L Specification No. BX-M-007, "Specification for Titanium Condenser Tubes for Brunswick Units 1 & 2", Revision 4, October 18, 1982.

16. Brunswick Calculation 0COND-0004, "Condenser Leakage Path Seismic Evaluation", Revision 0.