DEPARTMENT OF THE ARMY
HEADQUARTERS US ARMY COMMUNICATIONS-ELECTRONICS COMMAND
AND FORT MONMOUTH
FORT MONMOUTH, NEW JERSEY 07703-5301

RECEIVED
REGION 1
2001 SEP 25 AM 8:32

REPLY TO
ATTENTION OF

September 17, 2001

NMSB 2

Directorate for Safety

U.S. Nuclear Regulatory Commission
Region I
475 Allendale Road
King of Prussia, PA 19406-1415

Attention: Licensing Assistance Section

This refers to U.S. Nuclear Regulatory Commission (NRC) License Number 29-01022-14, Docket Number 030-29741.

We are requesting that an amendment to this NRC license be issued to authorize the following:

Americium-241, sealed sources, special form, AEA Technology (formerly Amersham Corporation) Model AMM.1001 or AMM.1001H; 8 microcuries per device (two sources of 4 microcuries each); not to exceed 4 millicuries total.

The AEA Model AMM.1001 and AMM.1001H are manufactured in accordance with Registration of Radioactive Sealed Sources and Devices (RSSD) Number MA-1059-S-174-S (enclosure 1) and are incorporated as custom-made assemblies (enclosure 2). The AEA Model AMM.1001 and AMM.1001H are the same sources that have been approved for incorporation into residential smoke detection systems.

The Americium-241 sealed sources are used as a source of ionization in a Lightweight Laser Designator Rangefinder (LLDR) developed by Litton Laser Systems for the Army. The LLDR is a custom made system by the manufacturer that will only be used by the military.

The LLDR is composed of a Laser Designator Module (LDM) and a Target Locator Module (TLM). The Americium-241 sealed sources are a component part of the LDM.

Enclosures 3 - 6 depict the LLDR top assembly, the LDM, the LDM exploded view and the location of the Americium-241 Source Assembly on the LDM Optical Bed Assembly.

130341

NMSS/RGNI MATERIALS-002

Printed on Recycled Paper

Litton performed a radiation survey on a similar laser system used by the military, utilizing a Ludlum Model 14C Radiation Detection Instrument. No external readings above background radiation levels were detected at any surface of the laser system.

The LLDR and its technical manual will contain the appropriate user safety controls, warnings and disposal information. The manufacturer will perform maintenance of the LDM. No maintenance of the LDM at the user level is anticipated.

In light of the above, we would like to be exempted from the requirements for an additional RSSD for either the source assembly or the LLDR based on our understanding of NUREG-1556, Volume 3, Consolidated Guidance About Materials Licenses, Applications for Sealed Sources and Device Evaluation and Registration, paragraph 5.1.3, page 5-2. The LLDR and sealed source assemblies utilizing the sealed sources approved under the above RSSD are custom made specifically for use by the military.

Our Point of Contact is Mr. Richard J. Lovell or Mr. Barry J. Silber, Facsimile on (908) 532-6403 or (908) 542-7161; Voice on (908) 427-4427/3112.

Sincerely,

Joseph M. Santarcieri

Enclosure

STEPHEN G. LaPOINT
Director
Directorate for Safety

Copy Furnished:

Commander, U.S. Army Materiel Command, ATTN: AMCSF-P, 5001 Eisenhower Avenue, Alexandria, Virginia 22333-0001

REGISTRY OF RADIOACTIVE SEALED SOURCES AND DEVICES
SAFETY EVALUATION OF SEALED SOURCE
(AMENDED IN ITS ENTIRETY)

NO: MA-1059-S-174-S
(Supersedes IL-136-S-174-S)

DATE: May 2, 2000

SOURCE TYPE: Foil Source

MODEL: AMM.1001, AMM.1001H, AMM.1001D

DISTRIBUTOR:

AEA Technologies, QSA Inc.
(Formerly Amersham Corporation)
40 North Avenue
Burlington, MA 01803

MANUFACTURER:

Nycomed Amersham Plc
White Lion Road Amersham
Buckinghamshire, England HP79LL

ISOTOPE:	MAXIMUM ACTIVITY:
Americium-241	50 microcuries (1.85 MBq) per square cm of foil for models AMM.1001 and AMM.1001H. Model AMM.1001 D activity is the combined activity of Model AMM.1001 rolled back-to-back producing a double sided foil

LEAK TEST FREQUENCY: 3 months for foils > 370 kBq (10 μCi)

PRINCIPAL USE: (S) Ion Generators, Smoke Detectors

CUSTOM SOURCE: _____ **YES** __X__ N O

Encl 1

SOURCE TYPE: Foil Source

DESCRIPTION:

The Model AMM.1001 primary foil consists of americium oxide uniformly distributed and sintered in a fine gold matrix at temperatures in excess of 800°C. This matrix is further contained between layers of silver, gold and palladium by hot forging, which results in a foil, which is typically one meter long and four centimeters wide.

There are two primary foil designs whose dimensions depend on the particular choice of materials contained within the various layers and the target thickness of each layer. Note that both designs are rolled out to a length and width of one meter and four centimeters, respectively.

Type 1

The first type of Model AMM.1001 primary foil is shown in Attachment 1. The target thickness of each layer and the overall thickness are indicated below:

Overall Thickness	0.155-0.258 mm
Face*	0.002-0.003 mm
Americium/Gold Matrix Layer	0.002 mm
Gold Backing	0.001 mm
Silver Backing	0.15-0.25 mm

*Gold, gold/palladium alloy, gold/palladium or palladium

Type 2

The second type of Model AMM.1001 primary foil uses the same layering concept as the first type. However, in the second type there are more layers and there is a variation in the thickness of the face, matrix and silver backing layers as well as face components. The target thickness of each layer and the overall thickness are as follows:

Overall Thickness	0.15-0.25 mm
Palladium Face	~0.0018 mm
Gold Alloy Layer	~0.0002 mm
Americium/Gold Matrix Layer	~0.0005 mm
Silver Backing	~0.2 mm

SOURCE TYPE: Foil Source

DESCRIPTION:(cont.)

Gold Alloy Backing	~0.0005 mm

Once either type of primary foil has been produced, it can be used to fabricate secondary foil sources by punching sized discs, squares and strips, or conceivably other geometric forms. Attachment 2 shows a typical secondary strip which has been punched from a Type 1 primary foil. Attachment 3 shows a secondary disc source which has been punched from a Type 1 primary foil. Attachment 4 shows a secondary disc source which has been punched from a Type 2 primary foil.

For both Type 1 and Type 2 secondary foil sources, testing is performed to ensure removable contamination does not exceed 0.005 microcurie.

The recommended working life is 10 years for both Type 1 and Type 2 subdivided pieces.

Model AMM.1001D

The Model AMM.1001D is manufactured by power-rolling two AMM.1001 primary foils back-to-back to produce a primary double sided foil with an overall thickness of approximately 0.38 mm. The layers of the double-sided foil are hot forged together prior to rolling with one active insert on either side of the silver block. The design of AMM.1001D is shown in Attachment 5. Each foil side has a face or either gold/palladium alloy or palladium with a thickness of approximately 0.002 mm.

Punched secondary foil discs are fabricated from primary foil and tested to ensure removable contamination does not exceed 0.005 microcurie.

Model AMM.1001H

The Model AMM.1001H consists of Model AMM.1001 or AMM.1001D discs mounted into holders constructed of tin plated brass or stainless steel. The mounting is done by either rolling or by staking the edge of the holder so that the outer edges of the foil discs are not exposed. Designs of Model AMM.1001H sealed source assemblies are shown in Attachments 6-9.

SOURCE TYPE: Foil Source

LABELING:

The foils are transferred to device manufacturers in containers which are labeled with the model number, trefoil, isotope, the Nycomed Amersham name or logo, the batch number and the number of secondary foil or source assemblies in the container.

DIAGRAMS:

See Attachments 1 through 9.

CONDITIONS OF NORMAL USE:

Models AMM.1001, AMM.1001H and AMM.1001D foil sources are designed for use in ionization smoke detectors. The sources will be used in industrial and residential environments. The normal conditions of use should not exceed the ANSI classification of C64444. The foil sources are not designed for use in corrosive environments and cyclic thermal and mechanical conditions must be avoided.

PROTOTYPE TESTING:

Prototype Model AMM.1001, AMM.1001D secondary foils and Model AMM.1001H sources have been tested to conditions described by USASI standard N5.10-1968, ANSI 542 and ISO 2919 and the classifications of C64444 was demonstrated. Results of wipe tests of the tested foils for all models were acceptable to less than 0.005 microcurie. In addition, AMM.1001 samples have successfully passed "special form" testing conditions.

The following additional tests were also performed on Model AMM.1001 foils:

1. Immersion in water of prototype foils for 3 weeks at room temperature; less than 0.001 microcurie per foil loaded at maximum activity was found in the water.

2. Immersion in 0.1 N hydrochloric acid for 24 hours at room temperature; less than 0.004 microcurie activity was detected in the solution.

SOURCE TYPE: Foil Source

PROTOTYPE TESTING:(cont.)

3. Foils were subjected to tests in moist air, dry air, sulfur dioxide, ammonia vapor and hydrochloric acid vapor. Less than 0.005 microcurie of contamination was detected in each case.

4. Foils were subjected to repetitive wipe tests (5000X). All single wipes were less than 0.005 microcurie of removable contamination.

5. Shelf-life tests of foils with 50 microcuries/cm^2 loading show no deleterious aging effects after six years.

6. Application of solder (used in printed circuit boards in smoke detectors) resulted in less than 0.005 microcurie of detectable contamination.

7. Foils and mounted foils have been subjected to ozone at 0.75 ppm for a period of 60 days and salt spray for 16 days without deleterious results.

EXTERNAL RADIATION LEVELS:

Nycomed Amersham calculated the following external radiation exposure rates for a 1 μCi source:

Distance	Dose Rate in μSv/hr (mR/hr)
5 cm	1.26 (0.13)
25 cm	5.02×10^{-2} (5.02×10^{-3})
100 cm	3.14×10^{-3} (3.14×10^{-4})

The calculations were performed using a specific gamma ray constant of 8.479×10^{-5} mSv/hr/MBq at 1 meter, from the Health Physics and Radiological Health Handbook, Revised Edition, 1992.

SOURCE TYPE: Foil Source

QUALITY ASSURANCE AND CONTROL:

Quality control, quality assurance and ANSI testing are conducted by the Quality Control Department, which is independent of the Production Department. The Quality Management System of Nycomed Amersham has been assessed and approved by Lloyd's Register Quality Assurance Limited against a number of quality assurance standards, including ISO 9001-1987, which is equivalent to the ANSI/ASQC N90 quality assurance standards.

Product samples of AMM.1001 and AMM.1001D are:

1. Visually inspected to ensure the surface is free from defects and wipe tested to an acceptance level of less than 0.005 microcurie.

2. Measured by alpha spectroscopy to ensure the thickness of the face and the activity are within specifications.

Product samples of AMM.1001H are:

1. Visually inspected to ensure the integrity of the foil in the holder.

2. Visually inspected to ensure the face is free from defects and wipe tested to an acceptance level of less than 0.005 microcurie.

3. Measured by alpha spectroscopy to ensure the thickness of the face and the activity are within specifications.

REGISTRY OF RADIOACTIVE SEALED SOURCES AND DEVICES
SAFETY EVALUATION OF SEALED SOURCE
(AMENDED IN ITS ENTIRETY)

SOURCE TYPE: Foil Source

LIMITATIONS AND OTHER CONSIDERATIONS OF USE:

1. The foil source shall be distributed only to persons specifically licensed by the Department, the Nuclear Regulatory Commission (NRC), an Agreement State, or a Licensing State.

2. Foils with activities > 10 μCi shall be leak tested at 3-month intervals using techniques capable of detecting 0.005 microcurie of removable contamination.

3. Handling, storage, use, transfer, and disposal: To be determined by the licensing authority.

4. Sources listed in this certificate shall not be subjected to conditions which exceed ANSI 77 C64444 classification.

5. Users of this source should avoid contacting foil sources with corrosive powders such as polyvinylchloride (PVC); prolonged contact of sources with organic solvents such as methanol or acetone; or use in cyclic thermal or mechanical conditions.

6. This registration sheet and the information contained within the references shall not be changed without the written consent of the Agency.

SAFETY ANALYSIS SUMMARY:

Based on our review of the information and test data submitted by Nycomed Amersham for source design Models AMM.1001, AMM.1001D and AMM.1001H, we conclude that the source designs should maintain their integrity for normal conditions of use and accidental conditions which might occur.

REGISTRY OF RADIOACTIVE SEALED SOURCES AND DEVICES
SAFETY EVALUATION OF SEALED SOURCE
(AMENDED IN ITS ENTIRETY)

(Supersedes IL-136-S-174-S)

SOURCE TYPE: Foil Source

REFERENCES:

The following documents for Nycomed Amersham Models AMM.1001, AMM.1001D and AMM.1001H are hereby incorporated by reference and are made a part of this registry document:

1. Letters with attachments dated March 18, 1971, November 4, 1974, November 8, 1974, March 10, 1975, September 20, 1979, March 15, 1995, June 6, 1997, November 24, 1997 and November 13, 1998.
2. Letters dated October 23, 1997 and August 13, 1999.
3. Telefacsimile dated September 30, 1999.
4. Letter dated October 28, 1999.
5. Letter dated December 2, 1999.

ISSUING AGENCY: Massachusetts Department of Public health
Radiation Control Program

DATE: 05/02/00 REVIEWED BY: Agostino Savastano
Agostino Savastano

DATE: 05/02/00 CONCURRENCE: Robert Walker
Robert Walker

REGISTRY OF RADIOACTIVE SEALED SOURCES AND DEVICES
SAFETY EVALUATION OF SEALED SOURCE
(AMENDED IN ITS ENTIRETY)

NO: MA-1059-S-174-S (Supercedes IL-136-S-174-S) DATE: May 2, 2000 ATTACHMENT 1 of 9

SOURCE TYPE: Foil Source

AMM.1001

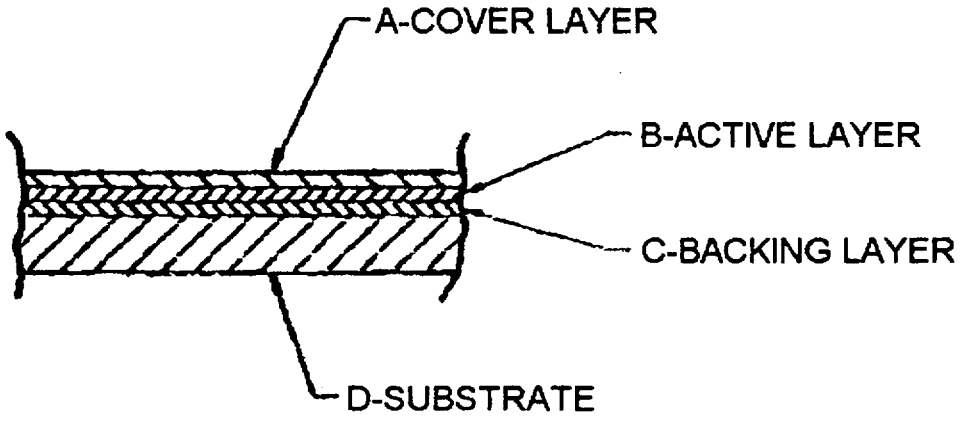

SECTION OF ACTIVE AREA

A-GOLD OR GOLD PALLADIUM ALLOY OR GOLD PALLADIUM LAMINATE (Pd ON SURFACE) 0.002 OR 0.003mm
B-AMERICIUM OXIDE PLUS GOLD 0.002mm OR RADIUM SULPHATE PLUS GOLD 0.002mm
C-GOLD 0.001mm
S-SILVER 0.15-0.25mm

ALPHA FOIL

REGISTRY OF RADIOACTIVE SEALED SOURCES AND DEVICES
SAFETY EVALUATION OF SEALED SOURCE
(AMENDED IN ITS ENTIRETY)

NO: MA-1059-S-174-S
(Supercedes IL-136-S-174-S)

DATE: May 2, 2000

ATTACHMENT 2 of 9

SOURCE TYPE: Foil Source

AMM.1001

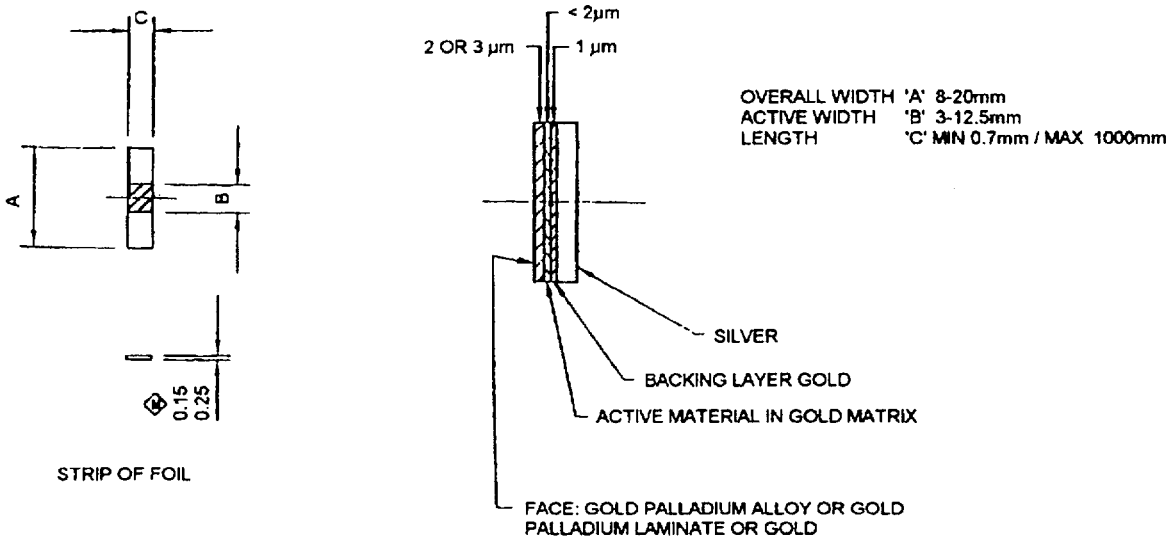

ALPHA FOIL STRIP

REGISTRY OF RADIOACTIVE SEALED SOURCES AND DEVICES
SAFETY EVALUATION OF SEALED SOURCE
(AMENDED IN ITS ENTIRETY)

NO: MA-1059-S-174-S (Supercedes IL-136-S-174-S) DATE: May 2, 2000 ATTACHMENT 3 of 9

SOURCE TYPE: Foil Source

AMM.1001

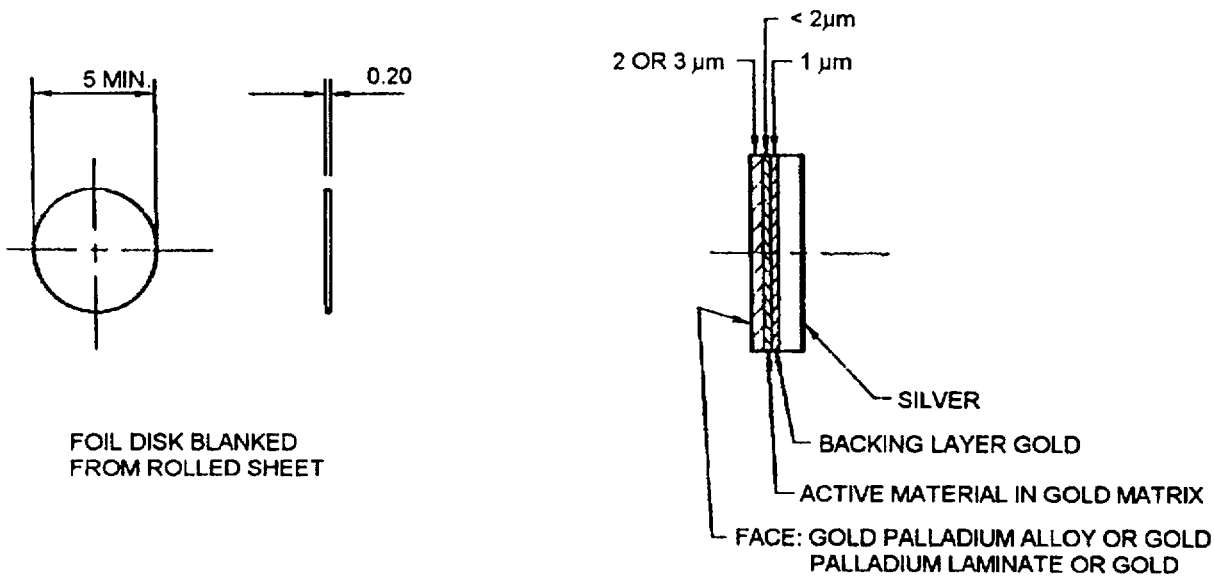

ALPHA FOIL DISC

REGISTRY OF RADIOACTIVE SEALED SOURCES AND DEVICES
SAFETY EVALUATION OF SEALED SOURCE
(AMENDED IN ITS ENTIRETY)

NO: MA-1059-S-174-S
(Supercedes IL-136-S-174-S)

DATE: May 2, 2000

ATTACHMENT 4 of 9

SOURCE TYPE: Foil Source

AMM.1001

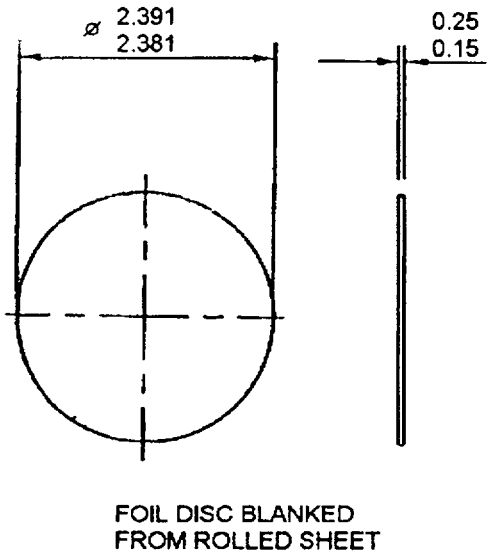

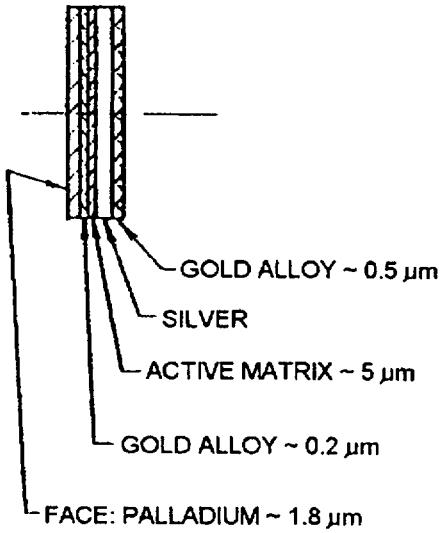

ALPHA FOIL DISC AMMK6045, AMMK4021
& AMMQ6527

REGISTRY OF RADIOACTIVE SEALED SOURCES AND DEVICES
SAFETY EVALUATION OF SEALED SOURCE
(AMENDED IN ITS ENTIRETY)

NO: MA-1059-S-174-S
(Supercedes IL-136-S-174-S)

DATE: May 2, 2000

ATTACHMENT 5 of 9

SOURCE TYPE: Foil Source

AMM.1001D

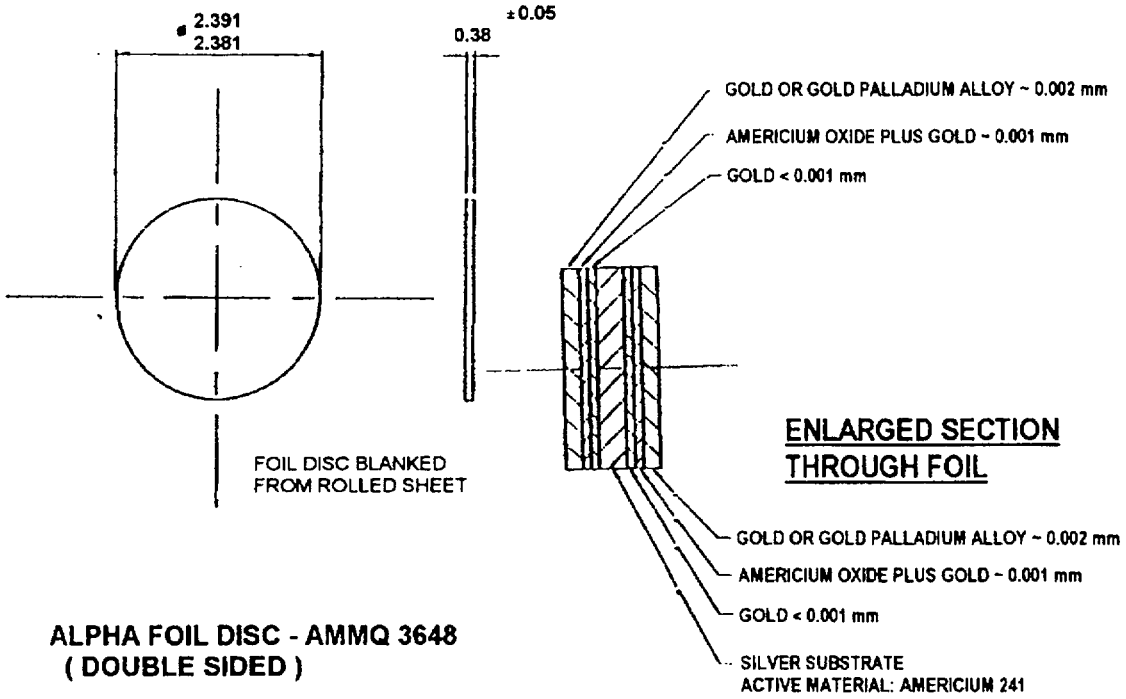

ALPHA FOIL DISC - AMMQ 3648
(DOUBLE SIDED)

REGISTRY OF RADIOACTIVE SEALED SOURCES AND DEVICES
SAFETY EVALUATION OF SEALED SOURCE
(AMENDED IN ITS ENTIRETY)

NO: MA-1059-S-174-S (Supercedes IL-136-S-174-S) DATE: May 2, 2000 ATTACHMENT 6 of 9

SOURCE TYPE: Foil Source

AMM.1001H

ITEM	DESCRIPTION
1	SOURCE HOLDER X0849 (B)
2	ALPHA FOIL DISC

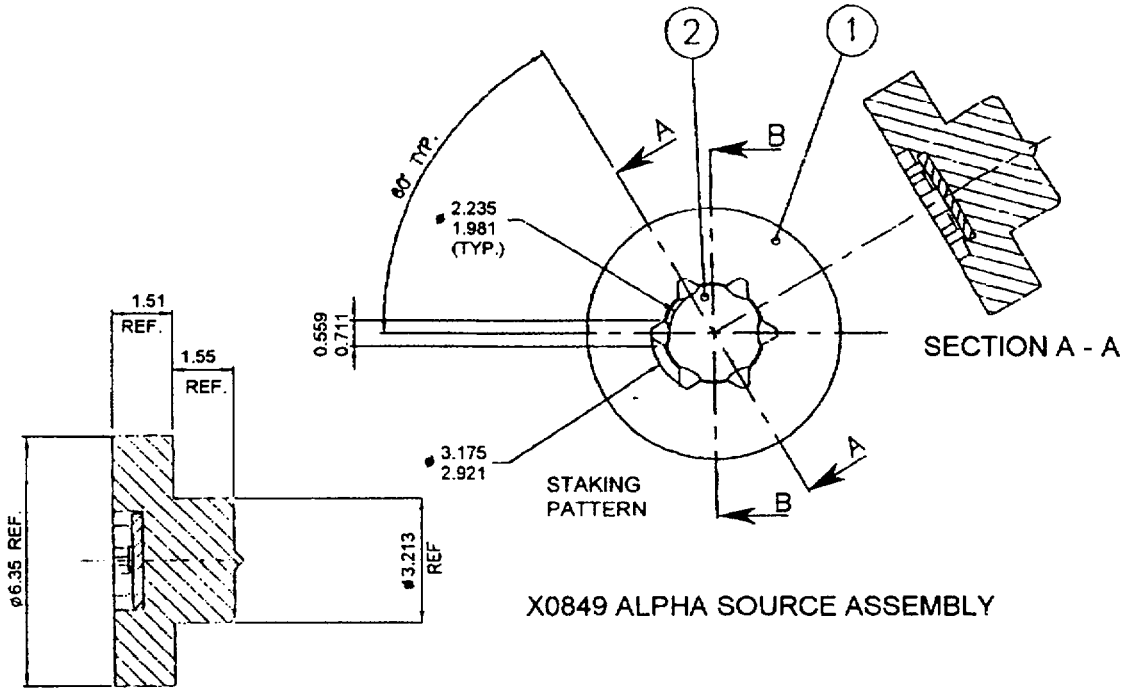

SECTION B - B

REGISTRY OF RADIOACTIVE SEALED SOURCES AND DEVICES
SAFETY EVALUATION OF SEALED SOURCE
(AMENDED IN ITS ENTIRETY)

NO: MA-1059-S-174-S (Supercedes IL-136-S-174-S) DATE: May 2, 2000 ATTACHMENT 7 of 9

SOURCE TYPE: Foil Source

AMM.1001H

ITEM	DESCRIPTION
1	SOURCE HOLDER X0869 (B)
2	ALPHA FOIL

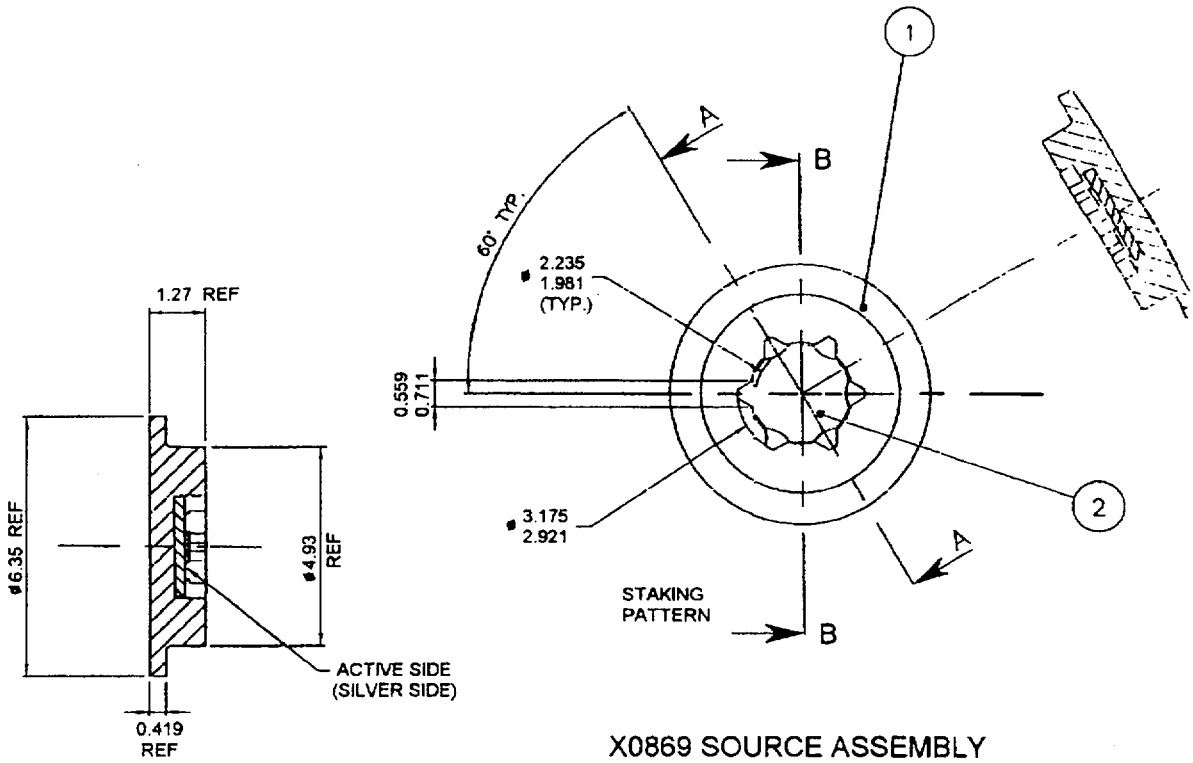

X0869 SOURCE ASSEMBLY

REGISTRY OF RADIOACTIVE SEALED SOURCES AND DEVICES
SAFETY EVALUATION OF SEALED SOURCE
(AMENDED IN ITS ENTIRETY)

NO: MA-1059-S-174-S (Supercedes IL-136-S-174-S) DATE: May 2, 2000 ATTACHMENT 8 of 9

SOURCE TYPE: Foil Source

AMM.1001H

ITEM	DESCRIPTION
1	SOURCE HOLDER X0724 (B)
2	ALPHA FOIL DISC

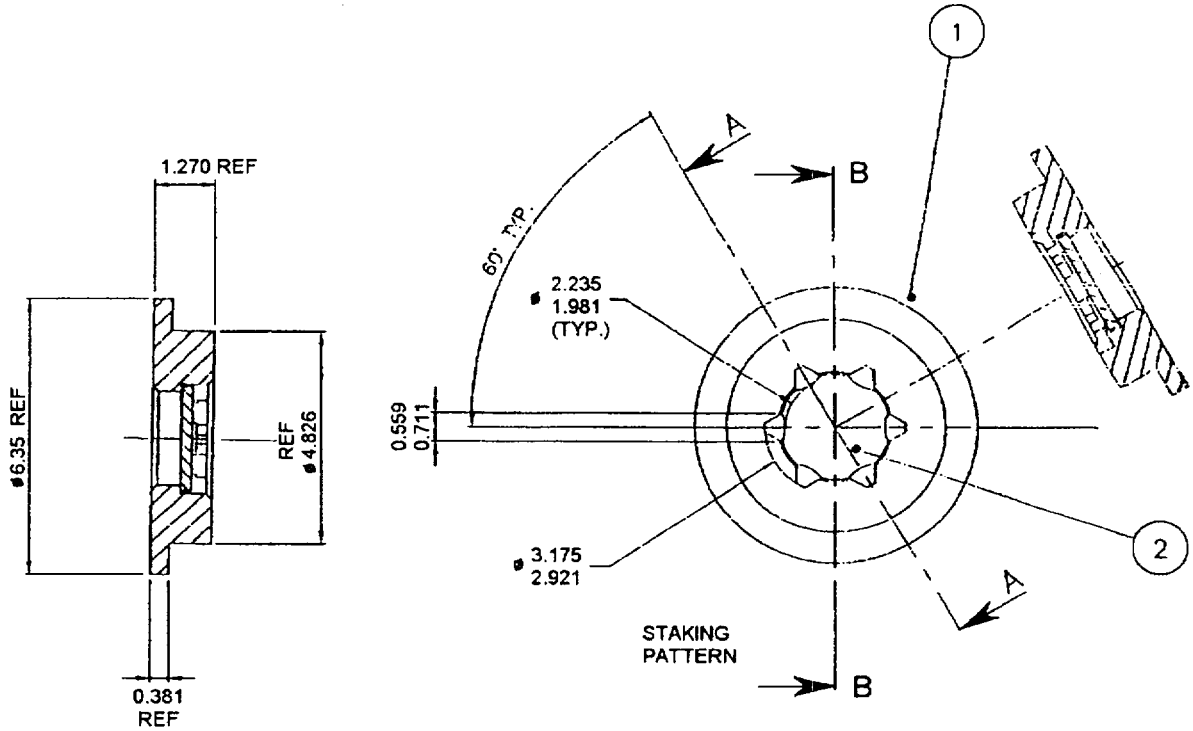

X0724 ALPHA SOURCE ASSEMBLY
(DOUBLE SIDED FOIL)

REGISTRY OF RADIOACTIVE SEALED SOURCES AND DEVICES
SAFETY EVALUATION OF SEALED SOURCE
(AMENDED IN ITS ENTIRETY)

NO: MA-1059-S-174-S (Supercedes IL-136-S-174-S) DATE: May 2, 2000 ATTACHMENT 9 of 9

SOURCE TYPE: Foil Source

AMM.1001H

	Item	Description	Material
B	1	HOLDER	SEE TABLE
	2	ACTIVE FOIL DISC Am241	

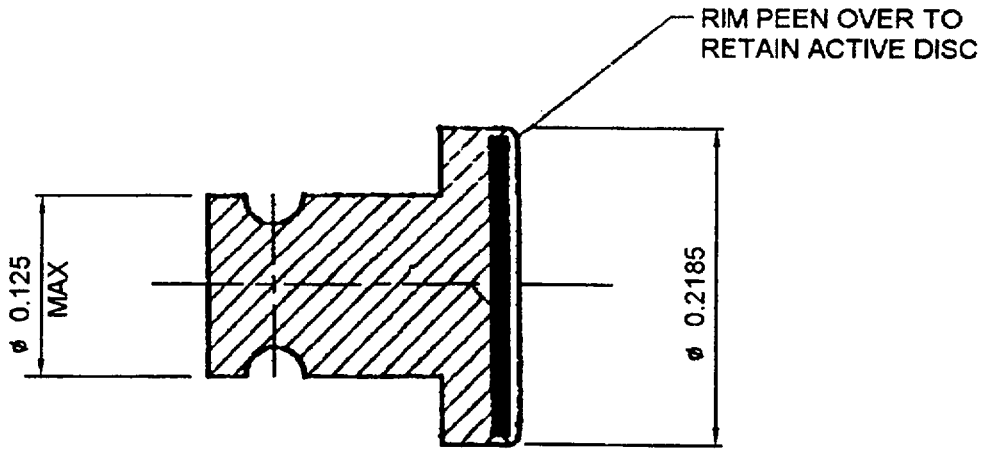

X No.	MATERIAL
X268/1	BRASS TIN PLATED
X268/2	MONEL TIN PLATED
X268/3	STAIN.STL.

APPLICATION		MF	REVISIONS			
NEXT ASSY	USED ON		LTR	DESCRIPTION	DATE	APPROVED
SEE ENGRG	F/A-18	R	B	INC ECN 3	92-03-14	[illegible]
RCD						

MAR 05 1998

SOURCE CONTROL DRAWING

B	B	B	B	
18	19	20	21	22

REV STATUS OF SHEETS	REV		B	B	B	B	B	B	B	B	B	B	B	B	B	B	B	B	B
	SHEET	PL	1	2	3	4	5	6	7	8	9	10	11	12	13	14	15	16	17

ADDITIONAL APPROVALS		CONTR NO. N00019-85-C-0250	
GR ENGR R.W. LOOMER	91-3-21	SIGNATURE	DATE
STRESS WTS W. SANDERS	90-11-16	DRAFTSMAN E. QUINTANA	90-10-25
MFG A. GINGOLD	90-11-14	CHECKER P. KOLB	90-11-16
QUAL J. ENGLAND	90-11-14	DESIGN ENGR B. ZAMSEY	90-11-14
CM C. SEMANICA	91-3-21	PROGRAM APPROVAL T. WESTOVER	91-05-21
SPE A. THOMPSON	90-11-16	CUSTOMER APPROVAL	

Litton
Laser Systems

TITLE
AMERICIUM SOURCE ASSEMBLY

SIZE	CAGE CODE	DRAWING NO.	REV
A	34860	66910280	B

SCALE NONE

SHEET 1 OF 21

Encl 2

R

1.0 SCOPE

1.1 Scope. This drawing establishes the detail requirements for an Americium 241 source and holder assembly.

2.0 APPLICABLE DOCUMENTS

2.1 Government documents. The following documents of the issue in effect on the date of invitation for bids or request for proposal, form a part of this drawing to the extent specified herein.

SPECIFICATIONS:

STANDARDS:

Military

MIL-S-22473E	Sealing, Locking, and Retaining Compounds
MIL-STD-130E	Identification Marking of U.S. Military Property
MIL-STD-454F	Standard General Requirements for Electronic Equipment
MIL-STD-810E	Environmental Test Methods and Engineering Guidelines
MS16995	Screw, Cap, Socket Head - Hexagon, Corrosion Resisting Steel UNC-3A.
MS51848	Washer, Lock-Helical Spring, Hi-Collar
QQ-B-626	Brass, Leaded and Nonleaded, Rod, Shapes, Forging and Flat Products
QQ-P-35	Passivation Treatments for Corrosion - Resistant Steel
QQ-S-763	Steel Bars, Wire, Shapes, and Forgings, Corrosion Resisting
QQ-S-766	Steel, Stainless and Heat Resisting, Alloys, Plate Sheet and Strip

(Copies of specifications, standards, and publications required by suppliers in connection with the specific procurement functions should be obtained from the procuring activity or as directed by the contracting officer.)

2.2 Non-Government documents. The following documents, of the issue in effect on the date of invitation for bids or request for proposal, form a part of this document to the extent specified herein.

STANDARDS:

American National Standards Institute

ANSI Y14.5-1973	Dimensioning and Tolerancing
ANSI Y10.20-1975	Mathematical Signs and Symbols for Use in Physical Sciences and Technology.
ANSI N542-1977	Seal Radioactive Sources, Classification (NBS 126)

American Society for Testing and Materials

ASTM A582-88	Standard Specifications for Free-Machining Stainless and Heat - Resisting Steel Bars, Hot Rolled or Cold-Finished

National Aerospace Standards

NAS620	Washer, Flat - Reduced O.D.
NAS1352	Screw, Cap, Socket Head - Undrilled and Drilled, Plain and Self Locking, Alloy Steel and Corrosion Resisting Steel, UNRC-3A

2.3 Miscellaneous Documents

49 CFR	Code of Federal Regulations
34860Assy60511615-19	Pockels Cell Assembly
34860Assy60511765-9	Bracket, Mounting, Ionizer Assembly

3.0 REQUIREMENTS

3.1 General. Individual requirements shall be as specified herein. Interpret dimensions and tolerances herein in accordance with ANSI Y14.5-1973 and mathematical symbols herein in accordance with ANSI Y10.20-1975.

3.1.1 Detail requirements. Detail requirements shall be as specified herein. In the event of any conflict between documents referenced and the detail specifications herein, the latter shall govern.

3.1.2 Serialization. This is a serialization controlled item.

3.2 Construction. The construction, and physical dimensions shall be as specified herein.

3.2.1 Source holder assembly. The source holder assembly shall be as shown in Figure 1.

3.2.1.1 Source dimensions. The Americium 241 source dimensions shall be as required to fit the source holder as indicated in Figure 2.

3.2.1.2 Activity. The activity present in the source shall be 4.0 ± 0.5 micro Curies.

3.2.1.3 Leakage. When examined per Appendix B, the maximum allowable leak shall not exceed 11100 DPM (.005μC) of activity.

3.2.2 Source Assembly. The source assembly shall be assembled as shown in Figure 1. The source shall be retained within the holder, Figure 2, using 5 crimps as specified in 4.2.2. The protective screen as detailed in Figure 3 shall be held in place using 4 tack bonds of either Hysol (CAGE 04347) products division adhesive 1C, or 3M (CAGE 04963) 2216B/A structural adhesive. The tack bonds shall be uniform in appearance and shall not mask the active area exposed by the foil source.

3.2.2.1 Source holder. The source holder shall be in accordance with Figure 2.

3.2.2.2 Protective screen. The protective screen shall be in accordance with Figure 3.

3.2.2.3 Workmanship. Workmanship shall be in accordance with MIL-STD-454, Requirement 9. Parts shall be free of oils, dirt or other debris.

3.3 Part marking. Marking shall be in accordance with MIL-STD-130. Each source assembly shall be marked with the following information.

a. Serial number

b. Part number

c. Isotope

d. Radiation symbol

e. Activity level

3.4 Environmental requirements. The source assembly shall be capable of operating and withstanding the following environmental conditions.

3.4.1 Temperature.
Ambient Temperature -66°C to +95°C

3.4.2 External Pressure.
Ambient Pressure 50 millitorr vacuum to 35 psia

3.4.3 Vibration. Vibration Qualification shall meet the requirements of MIL-STD-810E, Section II. In addition, all RMS levels tested shall be within 10 percent of each specified RMS level. The source assembly shall be designed to withstand the vibration spectrums as shown in Figures 4 and 5. In lieu of this high level of vibration, the source assembly shall be qualified as part of a subassembly as stated in 4.4.

4.0 QUALITY ASSURANCE PROVISIONS

4.1 Responsibility for testing. Unless otherwise specified, the supplier shall be responsible for all testing required herein. Testing may be performed by the supplier or a testing laboratory acceptable to and approved by the buyer. If testing is performed by an organization other than the supplier, the buyer shall be notified, in writing, of the name and address of the organization.

4.1.1 Supplier process plan and approval. Supplier shall submit a written, detailed, process plan. This plan must be approved by the buyer. Following approval, all product shipped by the supplier shall be certified to be fabricated in accordance with this process plan. Any proposed modification to the process plan shall require the buyer's approval. Additional first article testing may be required at the buyer's option.

4.2 Quality conformance inspection. Except as specified herein, quality conformance inspection shall be in accordance with and consists of the tests and inspections required for Group A. Parts shall have been screened prior to Group A inspection.

4.2.1 Screening. Each unit shall be temperature cycled per ANSI N542-1977 Class 2, 5 cycles.

4.2.2 Group A inspection. Group A inspection shall consist of the tests and inspection as defined in Table II herein.

4.2.2.1 Crimp Inspection. The crimp configuration on each source assembly shall be 100% inspected for the following items:

a. 5 crimps shall be present on each assembly.

b. Crimps shall be uniform in appearance.

c. Crimps shall be free of major defects.

d. Crimps shall be free of foreign materials.

e. Foil shall not be loose within the holder.

R

4.3 First article test. When specified by the purchase order, one first article testing in accordance with this specification is required.

4.3.1 First article requirements. Inspection and test shall consist of performing the tests in the order shown in accordance with Table I herein. Minimum source assembly quantity shall be 10. First article data shall be delivered to the buyer.

4.4 Vibration qualification. Due to the high vibration level for qualification, source holder assemblies shall be qualified as part of its end use subassembly. Two source holders shall be mounted onto an ionizer bracket as described by the following part number:

34860Assy60511765-9 Bracket, Mounting, Ionizer Assy

The source holders shall be retained using Grade-EV sealant per MIL-S-22473, and torqued to 20 ±2 oz-in. The bracket is then mounted to the pockels cell,

34860Assy60511615-19 Pockels Cell Assy

using 2 each of the following hardware:

NAS620C2	Washer, Flat-Reduced OD (for .086 screw)
MS51848-43	Washer, Lock-Spring (for .086 screw)
NAS1352C02-5	Screw, Cap, SCH (.086 x .312 long)

The hardware to be used to attach the cell to a vibration base is as follows; 3 each:

NAS520C2	Washer, Flat-Reduced OD (for .086 screw)
MS51848-43	Washer, Lock-Spring (for .086 screw)
MS16995-2	Screw, Cap, SCH (.086-56 x .250 long)

Note that all hardware is to be torqued to 20 ±2 oz-in.

4.4.1 Vibration testing. Two source assemblies as installed per 4.4 shall be qualified by the vibration levels at the base of the Pockels Cell Subassembly as defined in Figures 6, 7, and 8. The test duration shall be 30 minutes for each axis.

4.4.2 Vibration Inspection. Test qualification acceptance after vibration completion shall consist of 100% inspection for the following:

a. No observable evidence of loose foil source.

b. No observable deformation of foil source.

c. No observable holder deformation outside the limits of Figure 2.

d. No screen deformation outside the limits of Figure 3.

e. No observable crack or ruptures on foil, source, or holder.

f. Removed.

g. Acceptable leak test per Appendix B.

4.5 Approved supplier test plans. The supplier shall prepare test plans for screening First Article and Group A tests. The tests shall be conducted in accordance with a buyer-approved test plan written and provided by the supplier.

4.6 Quality conformance test data. One reproducible copy of the test data for each device delivered shall be supplied with each shipment. (Appendix A or vendor facsimile acceptable).

5.0 PREPARATION FOR DELIVERY

5.1 Packaging requirements. All packaging, package labeling, shipping, and wipe testing shall meet the requirements of 49 CFR, Section 173.400, Radioactive Materials. All packaging shall be adequate to prevent damage or contamination of parts and their marking during normal shipping, handling, and storage. In addition, each shipment shall include a Source Assembly Certificate per Appendix A.

6.0 NOTES

6.1 Intended use. Devices supplied to this drawing are intended for use in a military laser system.

6.2 Ordering data. Procurement contracts and requests for quotation shall specify:

a. Title, number, revision level, and date of this drawing.

b. Level of packaging and packing required for shipment if special requirements are needed.

c. Requirements for notification of change of product or process to procuring activity.

d. The requirement to perform first article test.

6.3 Approved source(s) of supply. Identification of approved source(s) of supply herein is not to be construed as a guarantee of present or continued availability as a source of supply for the item(s).

6.4 Disposal. The supplier shall be responsible to dispose of all returned radioactive (AM-241) sources in accordance with federal regulations when requested by the buyer for a period of 10 years after delivery.

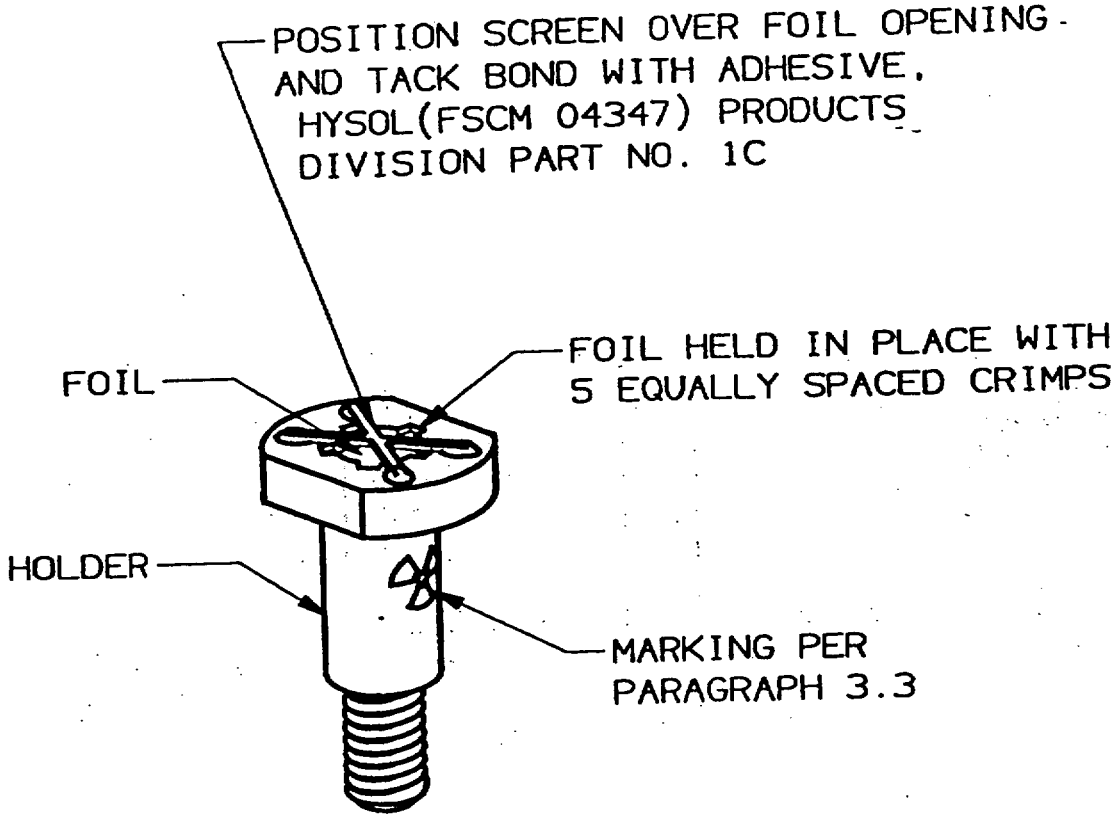

FIGURE 1: SOURCE HOLDER ASSEMBLY

COMPUTER FILE:	SIZE	CAGE CODE	DRAWING NO.	REV
/f18p/66910280#8_b.cad	A	34860	66910280	B
	SCALE NONE		SHEET 8	

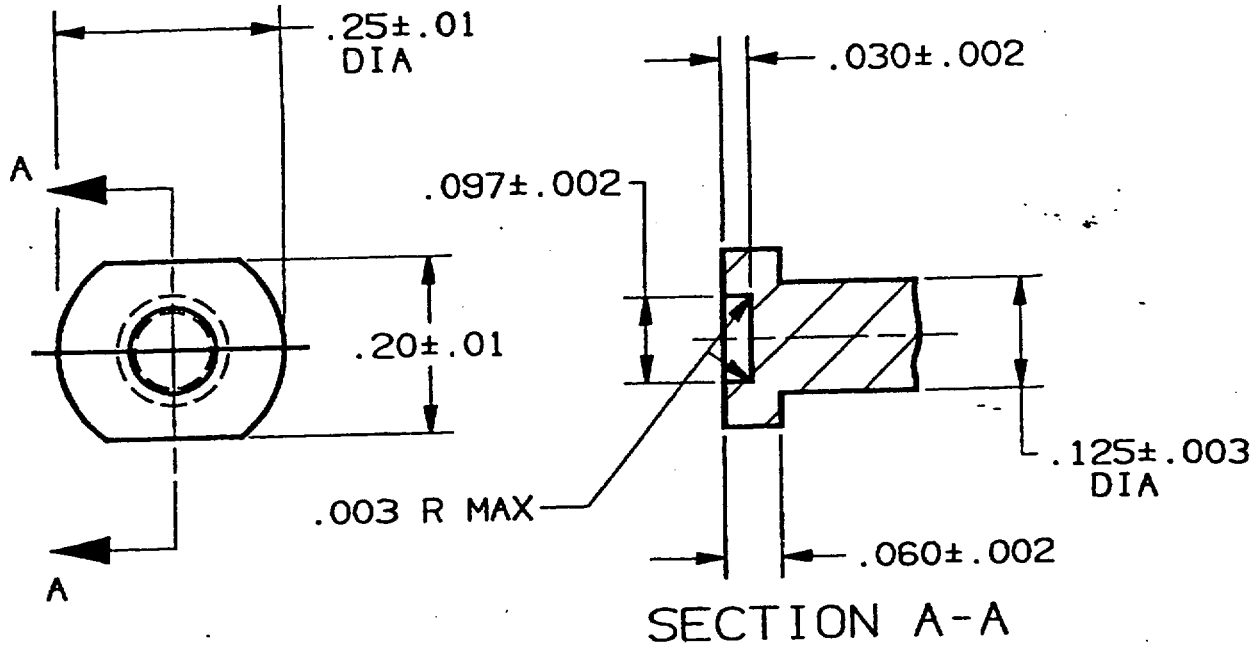

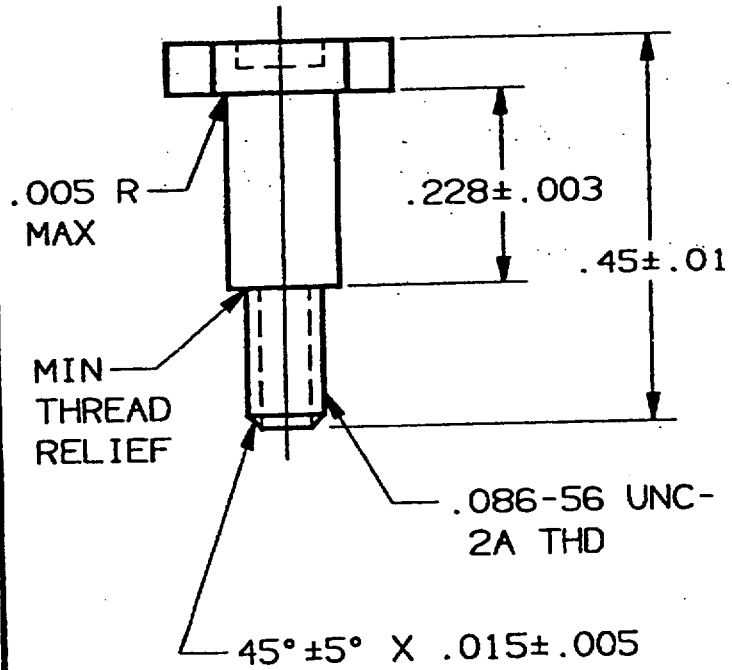

NOTES: UNLESS OTHERWISE SPECIFIED.

1. INTERPRET DIMENSIONS AND TOLERANCES PER ANSI Y14.5-1973
2. REMOVE BURRS AND BREAK SHARP EDGES.
3. MATERIAL: CRES. TYPE 303 PER QQ-S-763.
4. SURFACE FINISH: 63√ MAX.
5. FINISH: PASSIVATE, TYPE II PER QQ-P-35.

FIGURE 2: SOURCE HOLDER

COMPUTER FILE:	SIZE	CAGE CODE	DRAWING NO.	REV
/f18p/66910280#9_b.cad	A	34860	66910280	B
	SCALE NONE		SHEET 9	

NOTES: UNLESS OTHERWISE SPECIFIED

1. INTERPRET DIMENSIONS AND TOLERANCES PER ANSI Y14.5-1973.

2. REMOVE BURRS AND BREAK SHARP EDGES.

3. MATERIAL: CRES, TYPE 302 PER QQ-SS-763. THICKNESS .008 ± .002.

4. SURFACE FINISH: 63√ MAX.

5. FINISH: PASSIVATE, TYPE VII PER QQ-P-35.

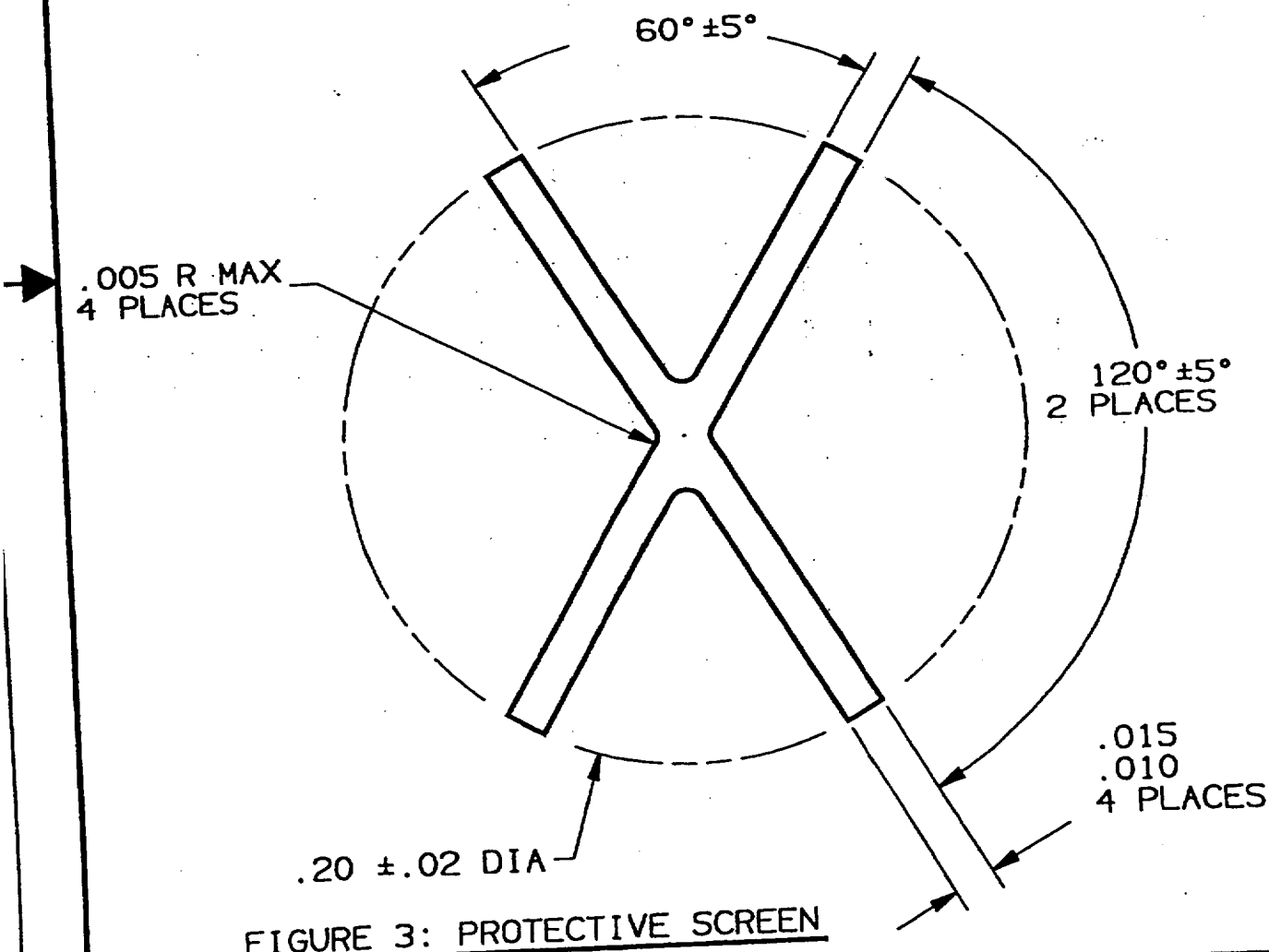

FIGURE 3: PROTECTIVE SCREEN

COMPUTER FILE:	SIZE	CAGE CODE	DRAWING NO.	REV
/f18p/66910280#10_b.cad	A	34860	66910280	B
	SCALE NONE		SHEET 10	

FREQUENCY, Hz	PSD, G^2/Hz
500	.1
600	.1
830	80
950	50
1200	50
1300	150
1400	150
1500	30
2000	30

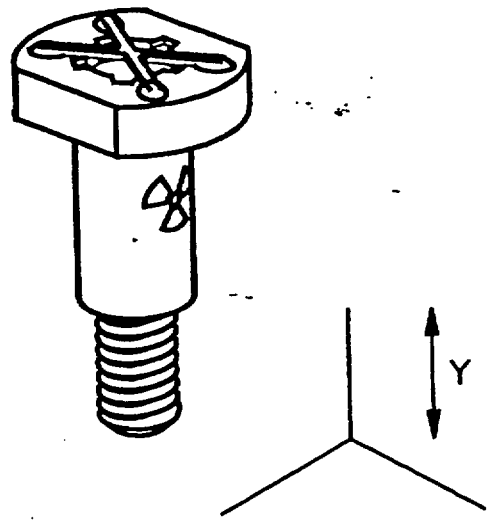

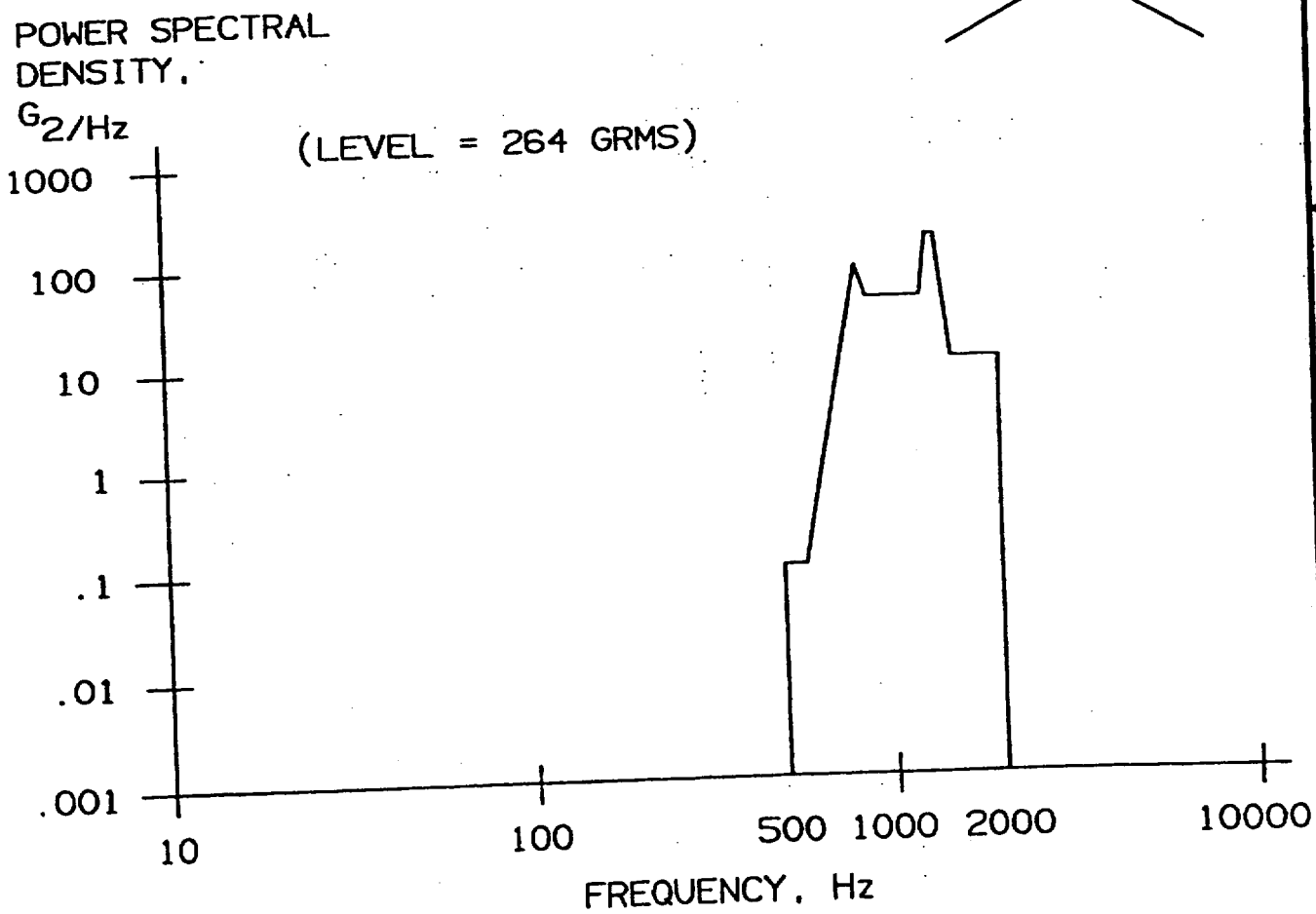

FIGURE 4: VERTICAL (Y) AXIS INPUT

COMPUTER FILE:	SIZE	CAGE CODE	DRAWING NO.	REV
/f18p/66910280#11_b.cad	A	34860	66910280	B
	SCALE NONE		SHEET 11	

FREQUENCY, Hz	PSD, G^2/Hz
500	.2
800	82
1100	82
1200	10
1300	60
1400	60
1500	10
2000	10

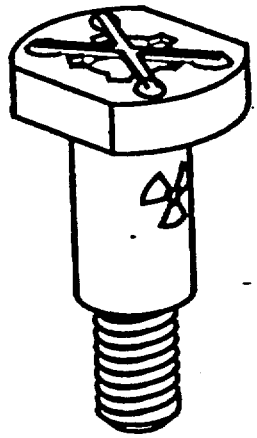

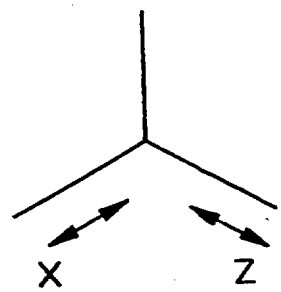

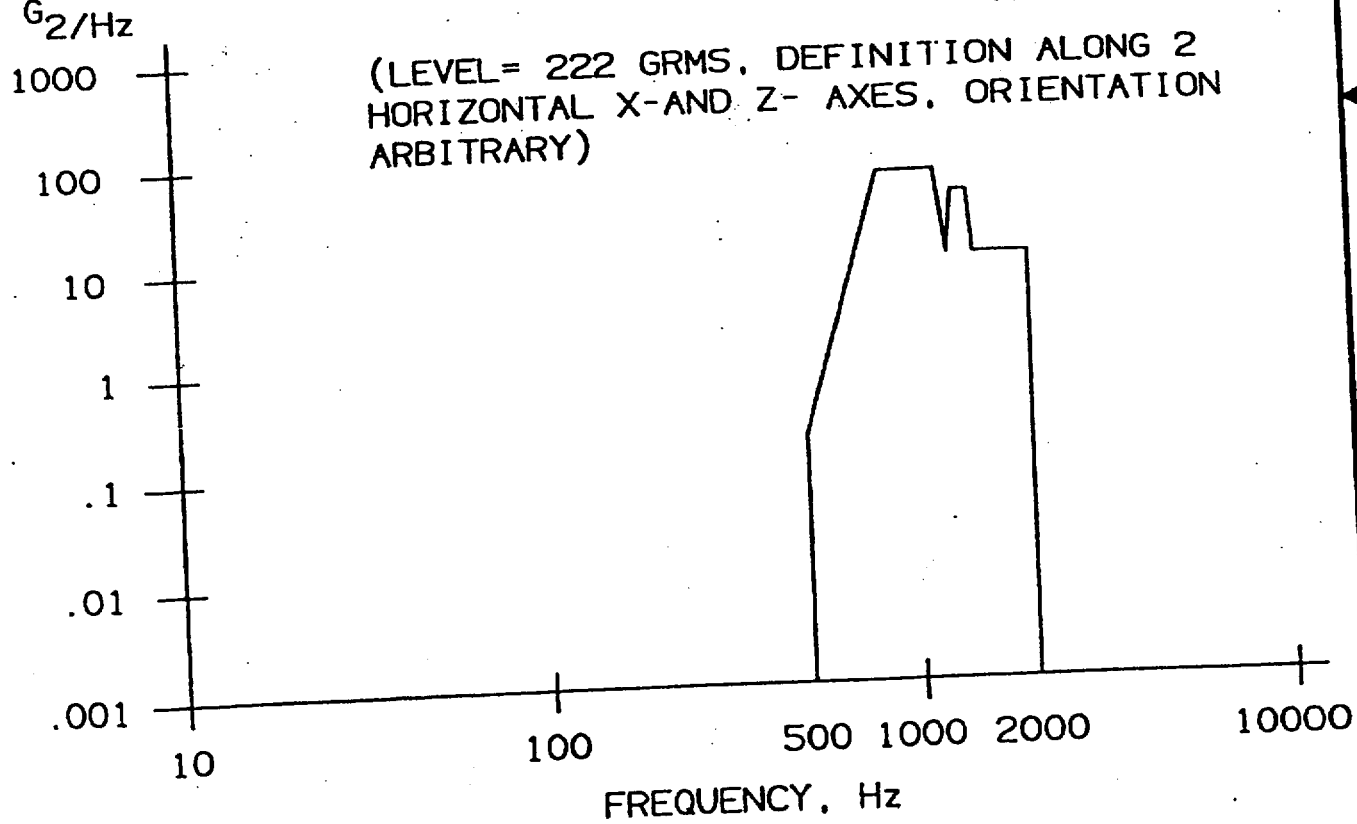

FIGURE 5: HORIZONTAL AXES INPUT

COMPUTER FILE:	SIZE	CAGE CODE	DRAWING NO.	REV
/f18p/66910280#12_b.cad	A	34860	66910280	B
	SCALE NONE		SHEET 12	

FREQUENCY, Hz	PSD, G^2/Hz
200	.05
500	.05
760	2.00
1100	2.00
1320	10.00
1500	2.00
2000	2.00

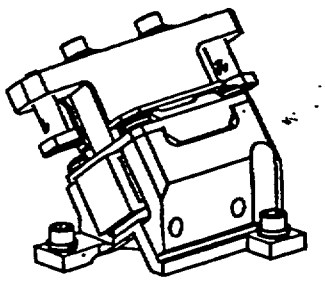

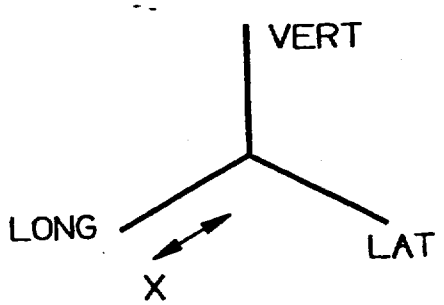

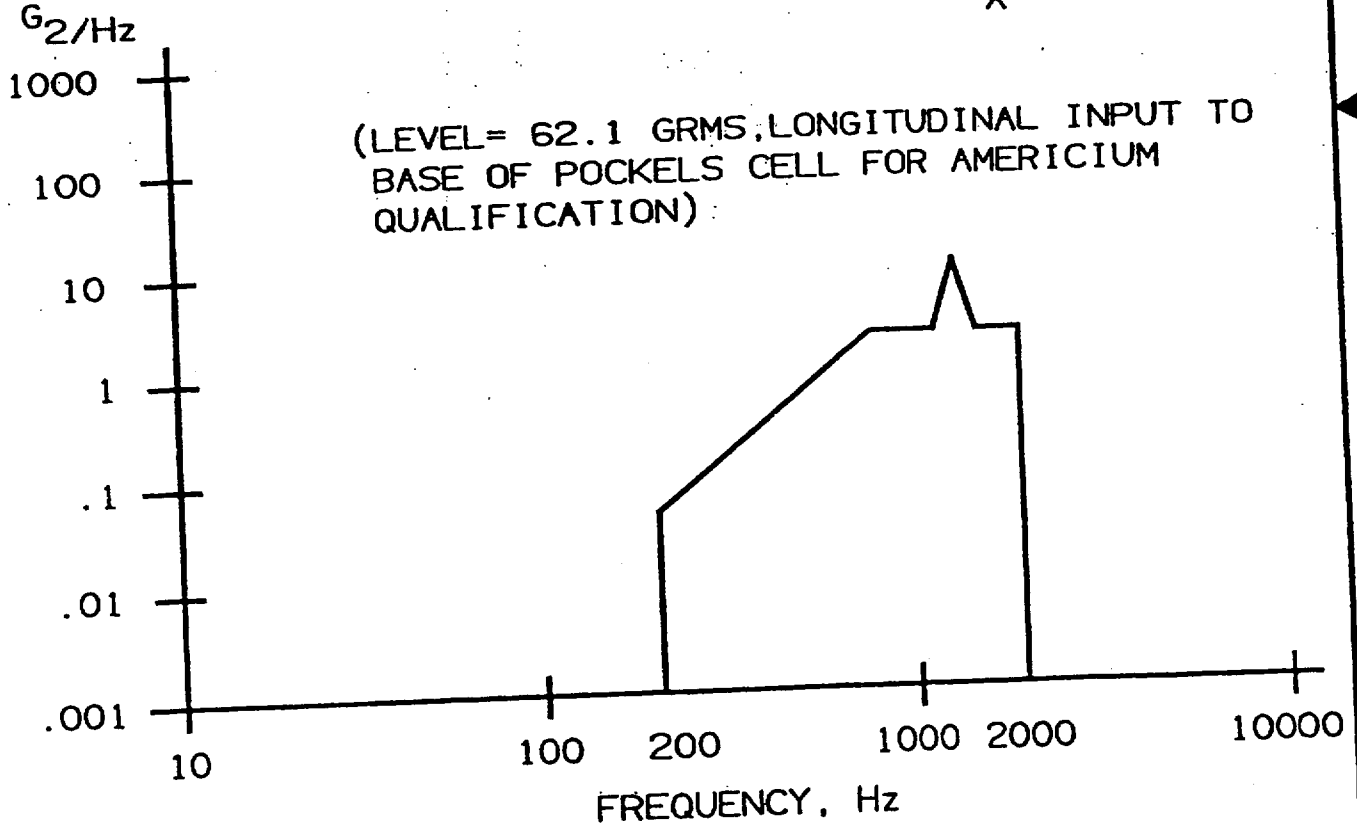

FIGURE 6: LONGITUDINAL INPUT

COMPUTER FILE:	SIZE	CAGE CODE	DRAWING NO.	REV
/f18p/66910280#13_b.cad	A	34860	66910280	B
	SCALE NONE		SHEET 13	

FREQUENCY, Hz	PSD, G^2/Hz
200	.01
410	.20
760	.20
1320	14.00
1460	4.90
1600	4.90
1730	2.40
1800	1.00
2000	1.00

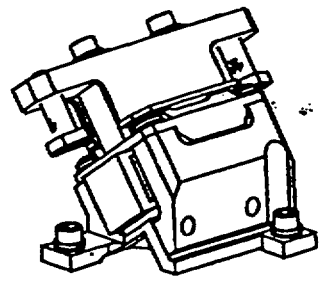

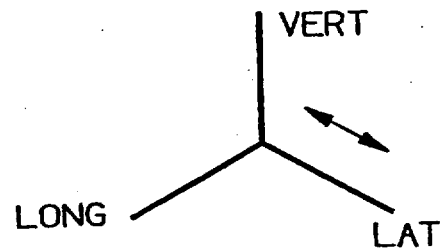

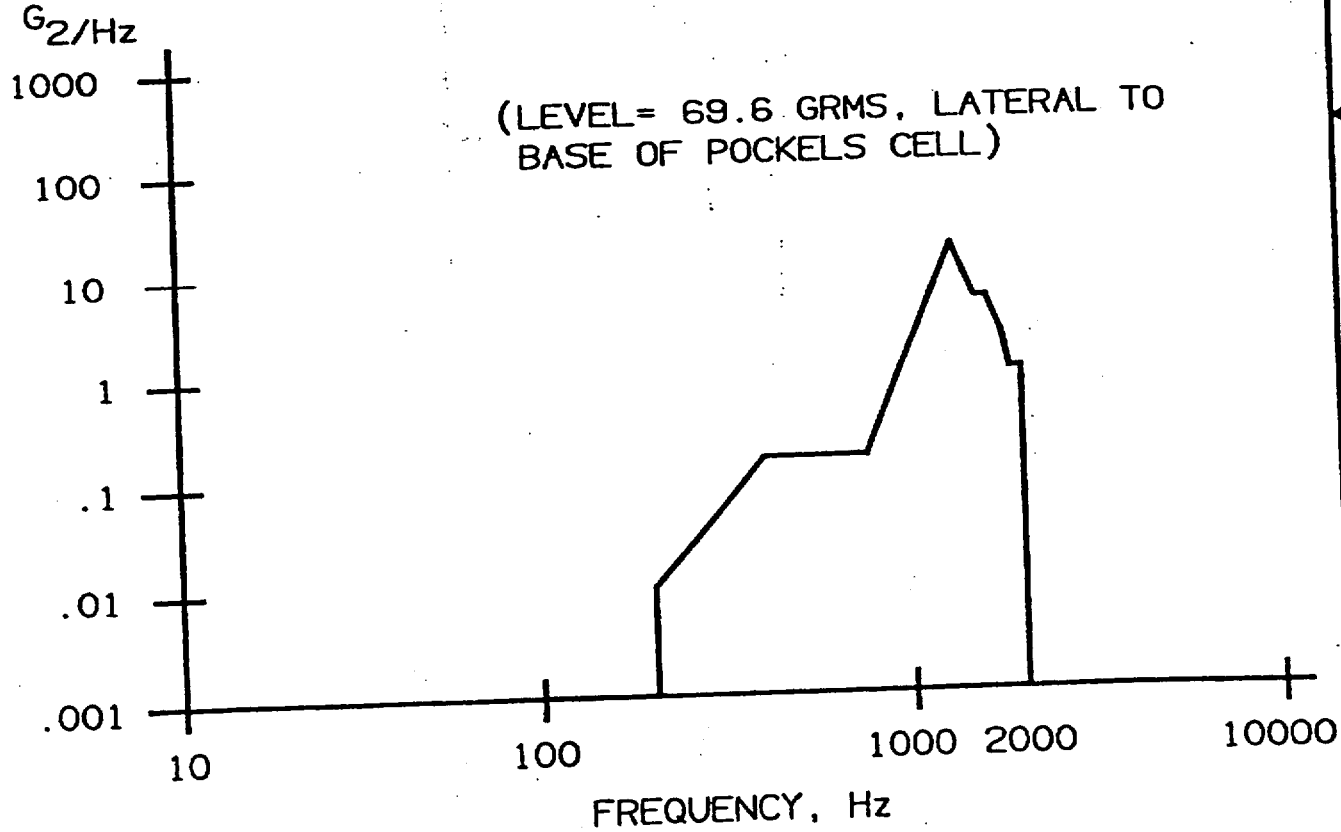

FIGURE 7: LATERAL INPUT

COMPUTER FILE:	SIZE	CAGE CODE	DRAWING NO.	REV
/f18p/66910280#14_b.cad	A	34860	66910280	B
	SCALE NONE		SHEET 14	

FREQUENCY, Hz	PSD, G^2/Hz
100	.01
460	.70
1000	.70
1320	16.00
1460	2.50
2000	2.50

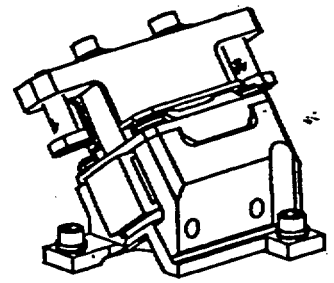

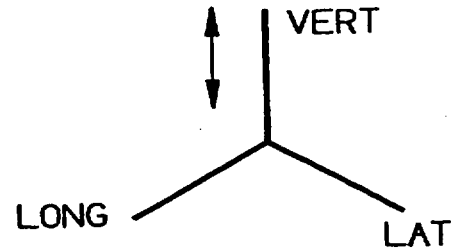

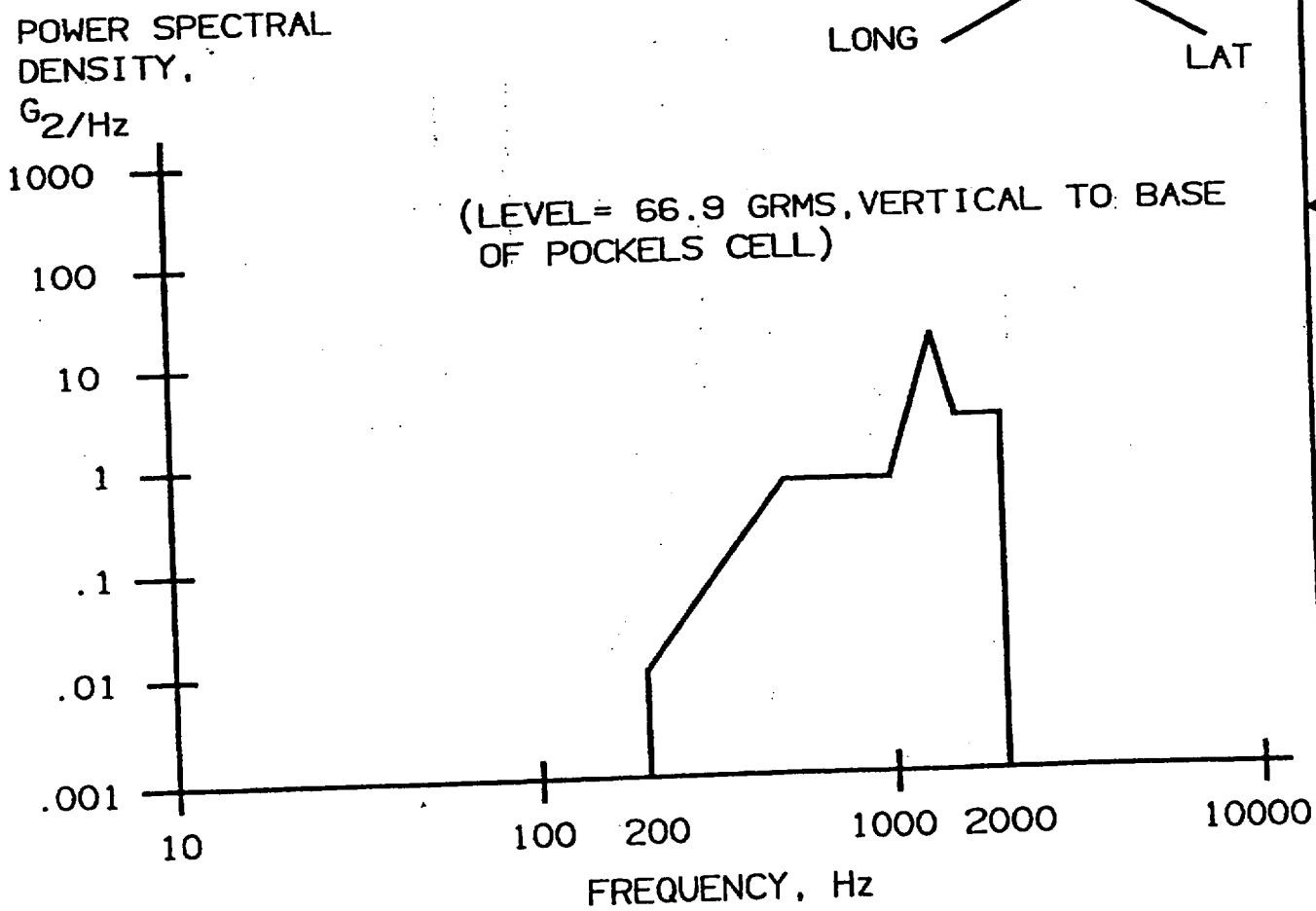

FIGURE 8: VERTICAL INPUT

COMPUTER FILE:	SIZE	CAGE CODE	DRAWING NO.	REV
/f18p/66910280#15_b.cad	A	34860	66910280	B
	SCALE NONE		SHEET 15	

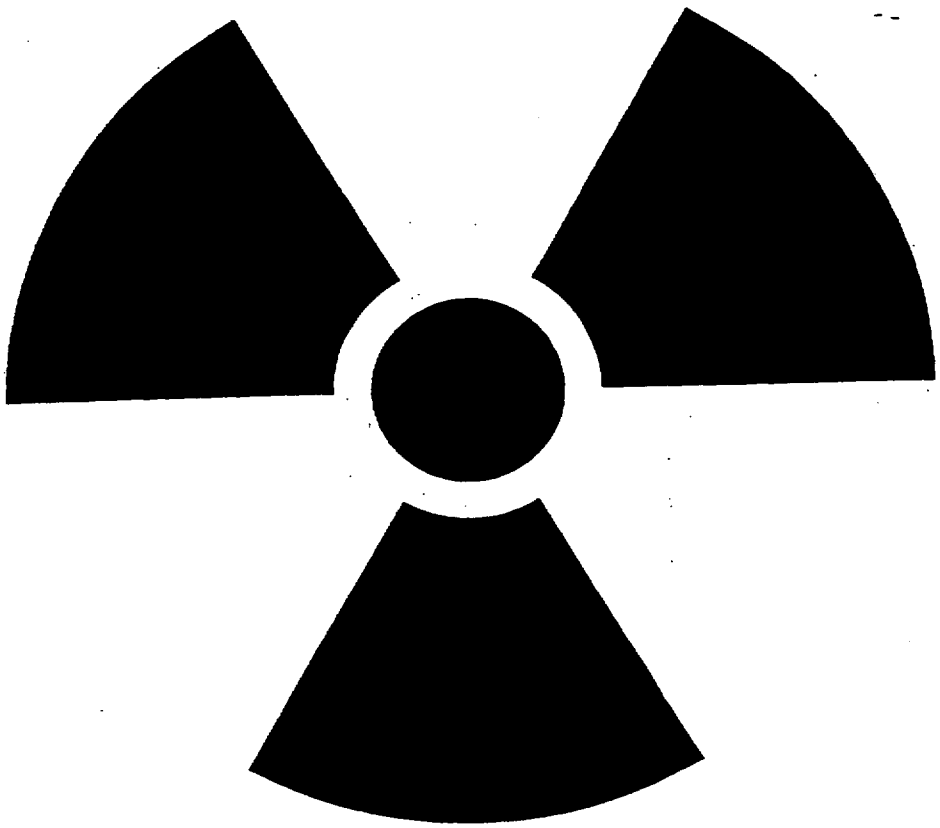

FIGURE 9

RADIOACTIVE SYMBOL

COMPUTER FILE:	SIZE	CAGE CODE	DRAWING NO.	REV
/f18p/66910280#16_b.cad	A	34860	66910280	B
	SCALE NONE		SHEET 16	

TABLE I. FIRST ARTICLE TEST

TEST/ INSPECTION	CONDITIONS	SAMPLE SIZE 1/
I		
Visual mechanical examination	Figure 2 & para. 4.2.2	10
IA		
Source activity	Per para 4.5	
II		
Leak test	Appendix B per approved test plan.	
III		
Vibration	Per para 4.4.1	
Temp	Class 3 per ANSI N542-1977 except temp -66°C to +95°C	
External Pressure	Class 3 per ANSI N542-1977 except low pressure to 50 millitorr vacuum, high pressure to 35 psia.	
III A		
Inspection	Per para 4.4.2	

1/ Accept on zero failures.

TABLE II. GROUP A INSPECTION

TEST	METHOD	CONDITIONS	SAMPLE SIZE
SUBGROUP I			
Leak test	Per Appendix B	25°C ±5°C	100%
Source activity	Per Approved Test Plan		100% 1/
SUBGROUP II			
Crimp inspection	4.2.2.1		100%

1/ A data sheet for each SN shall be supplied with the actual source activity value recorded showing compliance with para. 3.2.1.2.

APPENDIX A

SOURCE ASSEMBLY CERTIFICATE

SOURCE TYPE: AMERICIUM-241 VENDOR: AMERSHAM CONTROL NO: 34860-60511772-1

SOURCE SERIAL NO.'s:				
BACKGROUND:				
WIPE CPM:				
NET CPM:				
DETECTOR EFFICIENCY:				
MICROCURIES OF ACTIVITY ON WIPE:				
ACTIVITY 4.0 ±0.5 MICROCURIES:				

ANALYSIS OF THE WIPE TO BE USED TO CONDUCT A LEAK TEST ON THE SOURCE NOTED ABOVE WAS PERFORMED BY SCINTILLATION DETECTION REVEALED REMOVABLE CONTAMINATION WAS LESS THAN .005 MICROCURIES WHEN COMPARED TO NIST TRACEABLE STANDARDS. THE RESULTS ARE INDICATIVE OF A NON-LEAKING SOURCE.

AUTHENTICATING SIGNATURE: _____

DATE: _____

SIZE	CAGE CODE	DRAWING NO.	REV
A	34860	66910280	B

SCALE NONE SHEET 19 OF

SUGGESTED SOURCE(S) OF SUPPLY			
CONTROL NUMBER	SUPPLIER DATA		
	CAGE	PART NUMBER	NAME AND ADDRESS
66910280-1	51431	188322	AMERSHAM CORP. 2636 S. CLEARBROOK DR. ARLINGTON HEIGHTS, IL 60005

SIZE	CAGE CODE	DRAWING NO.	REV
A	34860	66910280	B
SCALE		SHEET 21 OF	

LLDR Top Assembly

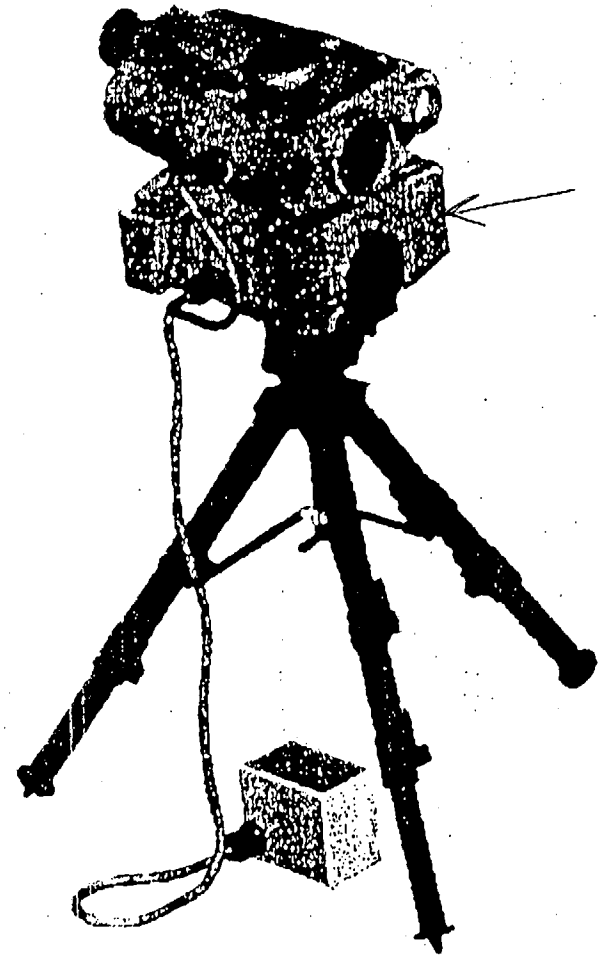

Encl 3

Litton
Laser Systems Division

*

LDM P/N 20002000-9

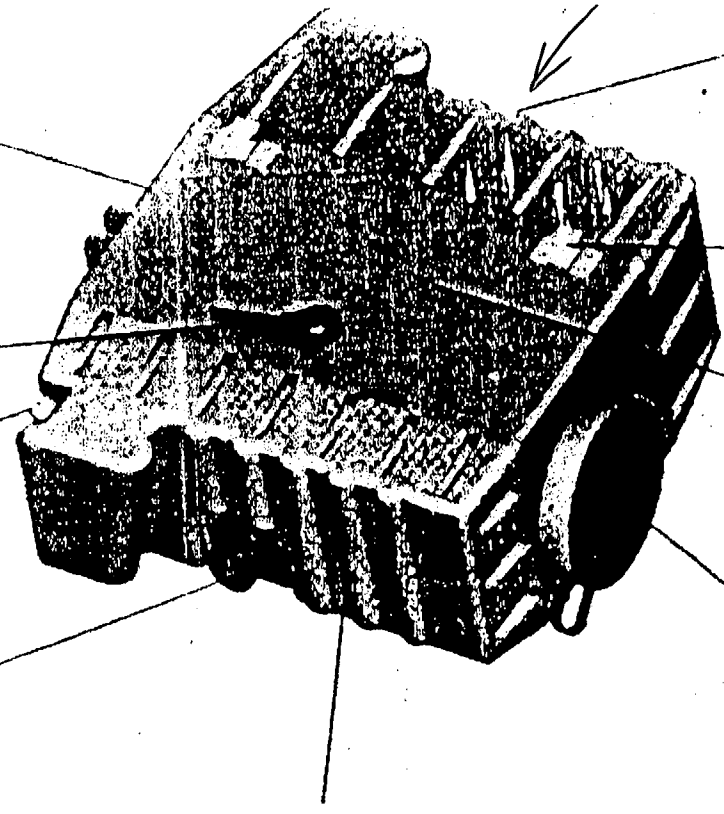

Encl 4

Litton
Laser Systems Division

LDM Exploded View

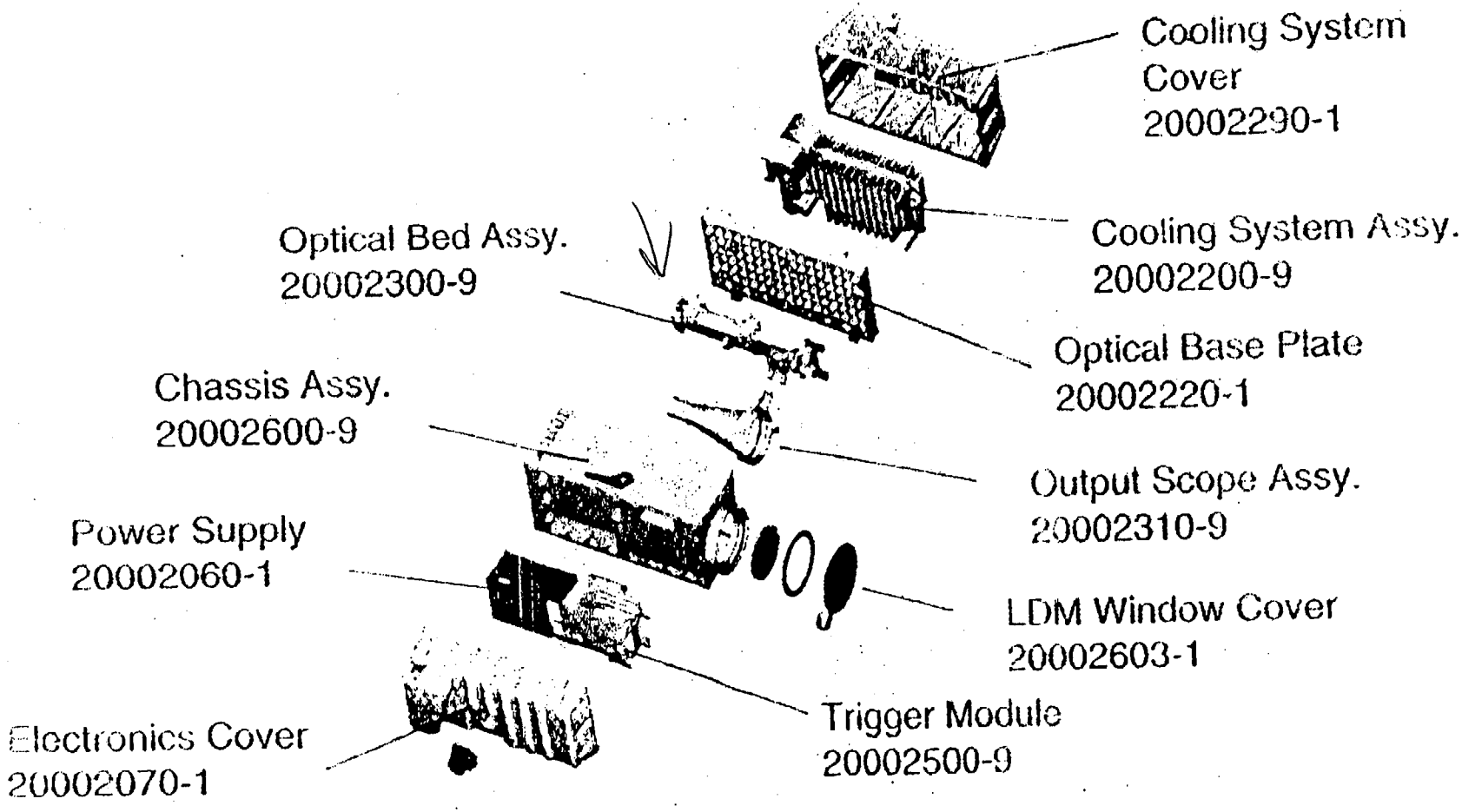

Encl 5

Litton
Laser Systems Division

LDM Optical Bed Assy. P/N 20002300-9 *

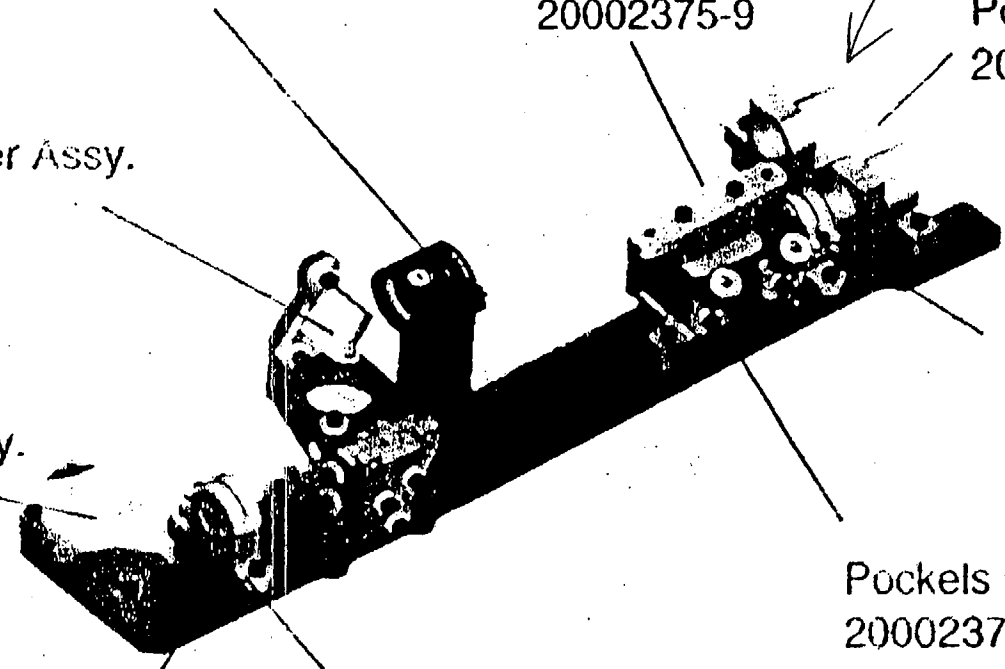

**

Encl 6

This is to acknowledge the receipt of your letter/application dated 9/17/2001, and to inform you that the initial processing which includes an administrative review has been performed.

AMEND. 29-01022-14

☑ There were no administrative omissions. Your application was assigned to a technical reviewer. Please note that the technical review may identify additional omissions or require additional information.

☐ Please provide to this office within 30 days of your receipt of this card

_____.

A copy of your action has been forwarded to our License Fee & Accounts Receivable Branch, who will contact you separately if there is a fee issue involved.

Your action has been assigned **Mail Control Number** 130341.
When calling to inquire about this action, please refer to this control number.
You may call us on (610) 337-5398, or 337-5260.

NRC FORM 532 (RI)
(6-96)

Sincerely,
Licensing Assistance Team Leader

BETWEEN:

License Fee Management Branch, ARM
and
Regional Licensing Sections

(FOR LFMS USE)
INFORMATION FROM LTS

Program Code: 03222
Status Code: 0
Fee Category: EX 3P 1C 2C
Exp. Date: 20031031
Fee Comments: 2C IS THORIUM V
Decom Fin Assur Reqd: N

LICENSE FEE TRANSMITTAL

A. REGION I

1. APPLICATION ATTACHED
   Applicant/Licensee: ARMY, DEPARTMENT OF THE
   Received Date: 20010925
   Docket No: 3029741
   Control No.: 130341
   License No.: 29-01022-14
   Action Type: Amendment

2. FEE ATTACHED
   Amount: _____
   Check No.: _____

3. COMMENTS

Signed M. A. Perkins
Date 9/26/2001

B. LICENSE FEE MANAGEMENT BRANCH (Check when milestone 03 is entered /__/)

1. Fee Category and Amount: _____

2. Correct Fee Paid. Application may be processed for:
   Amendment _____
   Renewal _____
   License _____

3. OTHER _____
   _____

Signed _____
Date _____