Niagara Mohawk

Richard B. Abbott
Vice President
Nuclear Engineering

Phone: 315.349.1812
Fax: 315.349.4417

September 14, 2001
NMP2L 2029

U. S. Nuclear Regulatory Commission
Attn: Document Control Desk
Washington, DC 20555

RE: Nine Mile Point Unit 2
Docket No. 50-410
NPF-69
TAC No. MB2797

Subject: ***Reinspection Plan for Core Shroud Weld H4***

Gentlemen:

By letter dated April 28, 2000 (NMP2L 1961), Niagara Mohawk Power Corporation (NMPC) submitted the results of the Nine Mile Point Unit 2 (NMP2) core shroud weld reinspections performed during the year 2000 refueling outage (RFO7). The results demonstrated that the average crack growth in weld H4 (and weld H5) was well within the predicted growth range. The letter also included a summary of the structural assessment performed using the crack evaluation guidelines in BWRVIP-01, "BWR Core Shroud Inspection and Flaw Evaluation Guidelines," to justify continued operation. This evaluation demonstrated that for a bounding crack growth rate of 5.0E-5 in/hr, weld H4 was acceptable for at least one cycle of operation after RFO7. The NRC staff agreed with this conclusion, as documented in the NRC letter dated October 30, 2000.

The April 28, 2000 letter noted that NMPC was evaluating BWRVIP-76, "BWR Core Shroud Inspection and Flaw Evaluation Guidelines," for treatment of high fluence regions, uninspected regions, etc., and BWRVIP-62, "Technical Basis for Inspection Relief for BWR Internal Components with Hydrogen Injection," for potential credit provided by Noble Metal Chemical Application (NMCA)/Hydrogen Water Chemistry (HWC) protection and the resulting "Factor of Improvement" (FOI) for the welds. A preliminary evaluation based on the BWRVIP-76 and BWRVIP-62 requirements had indicated that it might be possible to demonstrate acceptability of weld H4 for two cycles of operation (until RFO9) without requiring reinspection in RFO8.

NMPC has completed additional engineering evaluations that confirm that it is acceptable to operate for two 24-month cycles after RFO7 (i.e., until RFO9). The evaluations have assumed 16,000 operating hours for each 24-month cycle. Based on these evaluations, deferral of the reinspection of weld H4 for one additional operating cycle is justified. The evaluations have utilized the latest guidance contained in BWRVIP-14, "Evaluation of Crack Growth in BWR Stainless Steel RPV Internals," BWRVIP-62, BWRVIP-63, "Shroud Vertical Weld Inspection and Evaluation Guidelines," and BWRVIP-76. Attachment A summarizes the differences

A001

between the evaluations presented in the NMPC letter dated April 28, 2000 and the current evaluations. Attachment B describes the structural evaluation performed for core shroud weld H4, consistent with this latest guidance. The results presented in Attachment B demonstrate that the required American Society of Mechanical Engineers (ASME) Section XI structural margins are maintained for a minimum of two 24-month operating cycles.

Attachment B is considered by its preparer, General Electric, to contain proprietary information exempt from disclosure pursuant to 10 CFR 2.790. Therefore, on behalf of General Electric, NMPC hereby makes application to withhold this document from public disclosure in accordance with 10 CFR 2.790(b)(1). A non-proprietary version of this document has been included with this letter as Attachment C. An affidavit executed by General Electric detailing the reasons for the request to withhold the proprietary information has been included as Attachment D.

NMPC requests that the NRC approve operation for two cycles after RF07 (a total of 32,000 operating hours), when the last inspection of weld H4 occurred. With NRC approval of 32,000 hours of operation, the next scheduled inspection of weld H4 would occur during RF09. Approval is requested by January 31, 2002, in order to appropriately plan RFO8 activities.

Very truly yours,

Richard B. Abbott
Vice President Nuclear Engineering

RBA/DEV/mlg
Attachments

cc: Mr. H. J. Miller, NRC Regional Administrator, Region I
Mr. G. K. Hunegs, NRC Senior Resident Inspector
Mr. P. S. Tam, Senior Project Manager, NRR (2 copies)
Records Management

ATTACHMENT A

NINE MILE POINT UNIT 2
CORE SHROUD WELD H4 2-CYCLE ANALYSIS – SUMMARY OF CHANGES FROM PREVIOUSLY APPROVED ANALYSIS

INTRODUCTION

The existing core shroud analysis presented in the Niagara Mohawk Power Corporation (NMPC) letter dated April 28, 2000 defined a refueling outage frequency for core shroud weld H4 inspections. This analysis was prepared using several assumptions that have been re-evaluated based on the latest core shroud inspection and evaluation guidance in BWRVIP-76 (which combines guidance currently contained in BWRVIP-01, BWRVIP-07, and BWRVIP-63 and associated NRC safety evaluations), and the latest Intergranular Stress Corrosion Cracking (IGSCC) crack growth assumption guidance in BWRVIP-14, BWRVIP-62, and BWRVIP-63. The BWRVIP guidance for core shroud analysis has been revised to address structural evaluations that credit uninspected weld regions, and that allow credit for reduced crack growth rate assumptions provided the requirements established by the BWRVIP-14 and BWRVIP-62 guidance can be satisfied. The following paragraphs discuss the manner in which this latest BWRVIP guidance has been incorporated into the revised weld H4 structural evaluation (Attachment B), and contrast this latest guidance with the existing (April 28, 2000) analysis assumptions, approaches, and results.

SUMMARY OF ANALYSIS REVISIONS

1. Structural Margin Assessment

Existing Analysis

Both a limit load and a linear elastic fracture mechanics (LEFM) evaluation were performed. The evaluations assumed a bounding crack growth rate of 5.0E-05 in/hr, and assumed that the uninspected regions of the weld were cracked through-wall. The limit load and LEFM safety factors were determined to be 8.58 and 3.01, respectively, compared to the allowable value of 2.77.

Revised Analysis

The guidance in BWRVIP-76 discusses application of limit load analysis methods for core shroud welds where the fluence exceeds 3.0E+20 n/cm^2. BWRVIP-01 requires LEFM techniques since above the 3.0E+20 n/cm^2 threshold, reduced fracture toughness properties are significant and must be considered. The approach discussed in BWRVIP-76 is to define the actual fluence variation around the weld circumference and determine the locations that exceed the LEFM threshold. The limit load analysis is then performed

assuming through-wall conditions at all the locations that exceed the 3.0E+20 n/cm^2 threshold. Consistent with this guidance, the structural margin assessment for the H4 weld for operation to the end of Cycle 9 was performed as follows:

a) A limit load calculation was performed for a configuration in which through-wall flaws were assumed in regions where the inside diameter (ID) surface fluence at the end of Cycle 9 exceeded 3.0E+20 n/cm^2. Since all of the credited weld areas had a fluence less than the threshold value of 3.0E+20 n/cm^2, a limit load evaluation constituted a complete structural margin evaluation, and no LEFM or elastic-plastic fracture mechanics (EPFM) evaluations were necessary. For the nominal limit load case, the initial crack depth in all of the regions that were found cracked, or were uninspected, was assumed to be equal to the maximum flaw value of 0.78 inch (see discussion in Item 3 below). Fluence considerations are discussed in Item 2 below. Crack growth assumptions are discussed in Item 4. The limit load nominal case indicated a safety factor of 4.98, compared to the minimum required value of 2.77.

b) An LEFM calculation was conducted for an assumed configuration in which through-wall cracking was assumed where the ID surface fluence exceeded 5.0E20 n/cm^2. Crack growth and treatment of uninspected regions were identical to the limit load case. The LEFM calculation indicated a safety factor of 3.05, compared to the minimum required value of 2.77.

In addition, to demonstrate additional structural margin, an EPFM evaluation for the same configuration was conducted that makes use of additional load carrying capacity when the elastic-plastic nature of deformation is taken into account. The calculated safety factor was 4.0, compared to the minimum required value of 2.77.

2. Fluence Threshold Determination

Existing Analysis

A shroud neutron transport and uncertainty analysis determined that at the end of Cycle 8 the peak fluence for weld H4 would be 6.06E+20 n/cm^2, thereby exceeding the 3.0E+20 n/cm^2 LEFM threshold level in BWRVIP-01. Only the maximum fluence at the shroud inside diameter was considered in making this determination. Since the analyses were performed in accordance with the conservative guidelines established in BWRVIP-01 for crack growth rate (i.e., 5.0E-5 in/hr), detailed fluence analyses were not required.

Revised Analysis

The application of BWRVIP-14 crack growth rates is restricted to locations where the neutron fluence remains below 5.0E+20 n/cm^2. NMPC recently completed detailed neutron transport analyses as part of the evaluation contained in the Nine Mile Point Unit 2 (NMP2) 3-degree surveillance capsule report, which was submitted to the NRC by letter dated March 8, 2001 (NMP2L 2015). These neutron transport analyses were

performed consistent with the guidelines of draft regulatory guide DG-1053. The detailed reactor vessel neutron transport analysis showed that the azimuthal variation in the neutron flux is significant and results in portions of the H4 weld remaining well below the 5.0E+20 n/cm^2 fluence threshold level. These analyses are considered conservative for application to core shroud structural margin evaluations, as discussed below.

- The fluence variations around the H4 weld circumference and the through-thickness result in regions of the H4 weld that remain well below the 3E+20 n/cm^2 and 5E+20 n/cm^2 threshold levels (see Attachment B, Figure 4-1). The azimuthal variation in flux is a direct result of the reactor core physical geometry and therefore has minimal uncertainty. The core physical geometry creates octant symmetry geometry such that the transport analysis is performed based on octant symmetry. The actual core fuel loading patterns and the reactor core operation are factored into the transport analysis and the uncertainty analysis to account for deviations from the octant symmetry. The 3-degree capsule was located at the azimuth location where the flux is at the relative minimum. Since the H4 weld structural evaluation credits the lower fluence regions, the NMP2 plant-specific benchmark data at the low flux azimuth is a significant benchmark data point.

- The core shroud H4 weld is located approximately five (5) inches above the core centerline. The reactor vessel surveillance capsules are located approximately six (6) inches above the core centerline, which provides an excellent benchmark for the H4 weld. The 3-degree reactor vessel dosimeters were removed in 2000 for the purpose of obtaining specific benchmark data for the neutron fluence analysis for both the vessel and core shroud. The removal in 2000 provided a neutron flux benchmark relevant to the current core design loading and fuel design and uprated power. The surveillance capsule report (NMPC letter dated March 8, 2001) established excellent agreement between the transport analysis and the 3-degree capsule (agreement within 1-sigma uncertainty). The transport methods used in the NMP2 analyses are the same as those used for the Nine Mile Point Unit 1 (NMP1) core shroud vertical weld analyses and reactor vessel fluence determinations. In the NMP1 application, two core shroud boat samples and reactor vessel capsule dosimeter data were available for benchmark comparison. The NMP1 shroud boat samples provided two axial locations and through-thickness fluence benchmark data. The results of the NMP1 benchmark showed excellent agreement with both the capsule and shroud data within the analysis 1-sigma uncertainty. The NMP2 1-sigma neutron flux uncertainty was determined to be 16.6 percent for the H4 weld location.

The core shroud structural evaluation defined the locations exceeding the 3.0E+20 n/cm^2 and 5.0E+20 n/cm^2 threshold levels based on the fluence defined by adding a 2-sigma uncertainty (33.2 percent) and assuming ID fluence. This approach conservatively bounds the uncertainties associated with the projected fluence through the end of Cycle 9 operation. The Attachment B analysis has demonstrated that application of both the ID fluence assumption and the 2-sigma uncertainty adds a factor of three conservatism to the

calculated LEFM safety factor, when compared to application of the nominal through-thickness fluence.

3. Uninspected Weld Region Assumptions

Existing Analysis

All uninspected weld lengths were assumed to be cracked through-wall.

Revised Analysis

The BWRVIP-76 guidance allows credit for uninspected weld regions provided the inspection coverage is greater than 50 percent of the weld circumference. Based on the RFO7 inspection results documented in Attachment B, the BWRVIP-76 guidance requires an assumption that the uninspected region is 100 percent flawed. The BWRVIP-76 guidance then allows the assumed crack depth in the uninspected region to be equivalent to the average of the crack depths identified in the inspected region. The uninspected region guidance found in BWRVIP-76 is essentially the same as that contained in BWRVIP-63, "Shroud Vertical Weld Inspection and Evaluation Guidelines." The NRC safety evaluation related to BWRVIP-63, dated August 20, 2001, concluded that: (1) For plants utilizing effective Hydrogen Water Chemistry (HWC) or Noble Metal Chemical Application (NMCA), an assumed crack depth in the uninspected regions equal to the average depth of observed cracks in the inspected regions is acceptable; and (2) For plants with normal water chemistry, the more conservative maximum crack depth for the uninspected regions should be applied. In the Attachment B structural evaluation, for both Cycle 8 and Cycle 9 operation, the uninspected region crack depth has been assumed equal to the maximum crack depth found in the inspected regions (0.78 in). No credit has been taken for HWC/NMCA during Cycle 9 operation with regard to assumed crack depth in uninspected weld regions.

4. IGSCC Crack Growth Assumptions

Existing Analysis

A crack growth rate of 5.0E-5 in/hr was used in both the length and depth directions, due to fluence considerations.

Revised Analysis

BWRVIP-14 guidance for IGSCC crack growth in stainless steel core shroud applications has been approved in the NRC final safety evaluation dated December 3, 1999 (including the July 20, 2001 supplemental letter). The NRC has approved both the disposition rate of 2.2E-5 in/hr and the K-dependent crack growth rate correlations. The Attachment B structural evaluation credits only the disposition crack growth rate of 2.2E-5 in/hr. Application of the K-dependent correlation would reduce the total crack growth by a factor of two compared to the Attachment B analysis. Application of the BWRVIP-14 crack growth rates requires water chemistry with a conductivity of less than 0.15 μS/cm, and requires that the fluence remain below 5.0E+20 n/cm^2.

The BWRVIP-62 guidance allows a factor of improvement (FOI) of 2 to be applied to either the disposition or the K-dependent crack growth rates derived in BWRVIP-14 if HWC, or HWC plus NMCA, is used. The NRC has found the BWRVIP-62 guidance generally acceptable, except for certain open items, in a safety evaluation dated January 30, 2001. The Boiling Water Reactor Vessel and Internals Project (BWRVIP) has responded to the NRC safety evaluation open items in a letter dated August 1, 2001. The bases for application of the FOI in the revised H4 weld analysis are consistent with the BWRVIP open item responses.

In accordance with the above-described BWRVIP-14 and BWRVIP-62 guidance, the revised analysis assumes the following crack growth rates:

- For Cycle 8 operation: 5.0E-5 in/hr for length direction; 2.2E-5 in/hr for depth direction. Assumes no HWC/NMCA for the entire operating cycle.

- For Cycle 9 operation: 5.0E-5 in/hr for length direction; 1.1E-05 in/hr for depth direction. Assumes HWC/NMCA (FOI of 2 applied for depth direction).

NMPC satisfies the conditions required to justify these assumed crack growth rates, as follows:

a) *BWRVIP-14 Operating Chemistry Requirements*

NMP2 has operated within the conductivity limits on a cycle average basis for Cycle 8 (to date). In accordance with the NMPC chemistry control program, reactor water conductivity is maintained within the requirements of BWRVIP-14.

b) *BWRVIP-14 Fluence Threshold*

The H4 weld specific fluence analysis determined the 1-sigma neutron flux uncertainty to be 16.6 percent. The Attachment B analysis with regard to conformance with BWRVIP-14 threshold restrictions applies a conservative 2-sigma (33.2 percent) increase over the nominal fluence at the end of Cycle 9. As discussed previously, increasing the fluence by 2-sigma assures that the neutron transport uncertainty is conservatively bounded.

c) *BWRVIP-62 HWC plus NMCA Operating Requirements*

NMPC has implemented a HWC/NMCA control program to assure that the requirements identified in BWRVIP-62 for application of the FOI are satisfied. The HWC/NMCA control program will be maintained consistent with either the requirements stated in the NRC safety evaluation on BWRVIP-62, dated January 30, 2001, or the final resolution of the BWRVIP responses to the safety evaluation open items. NMP2 implemented NMCA and hydrogen injection during operating Cycle 8. Conservatively, the structural analysis has credited the BWRVIP-62 FOI for Cycle 9 operation only.

CONCLUSION

The Attachment B structural evaluation has demonstrated that the core shroud H4 weld required ASME Section XI structural margins are maintained for a minimum of two 24-month operating cycles (a total of 32,000 hours of operation). The structural evaluations were performed consistent with the appropriate BWRVIP guidance.

Substantial conservatisms are incorporated into the Attachment B structural evaluation (enumerated in Section 7 of Attachment B). In addition, the NRC has recently approved (July 20, 2001) the application of the K-dependent crack growth correlation of BWRVIP-14. The Attachment B structural evaluation credits only the disposition growth rate of 2.2E-5 in/hr. The application of the K-dependent correlation would reduce the total crack growth by a factor of 2 compared to the Attachment B analysis assumptions. These conservatisms provide added confidence that adequate structural margins are maintained for the H4 weld for operation to the end of Cycle 9.

ATTACHMENT C

GE Nuclear Energy Report GE-NE-B13-02123-00, Section 1-Rev. 1, H4 Shroud Weld Evaluation to Justify Continued Operation of Nine Mile Point Unit 2 Through RFO9

(Non-Proprietary Version)

GE Nuclear Energy

TECHNICAL SERVICES
GE Nuclear Energy
175 Curtner Avenue, San Jose, CA 95125

GE-NE-B13-02123-00, Section 1-Rev. 1
DRF #B13-02123-00, Section 1
Class I
August 2001

H4 SHROUD WELD EVALUATION TO JUSTIFY CONTINUED OPERATION OF NINE MILE POINT UNIT 2 THROUGH RF09

August 2001

Prepared for

Niagara Mohawk
Nine Mile Point 2

H4 SHROUD WELD EVALUATION TO JUSTIFY CONTINUED OPERATION OF NINE MILE POINT UNIT 2 THROUGH RF09

August 2001

Prepared by

H. S. Mehta
A.S. Herlekar
D.V. Sommerville

Approved by: _____
R.M. Horn, Manager
Structural Mechanics & Materials

PROPRIETARY INFORMATION NOTICE

This is a non-proprietary version of the document GENE-B13-02123-00, Section 1-00, Rev.1, which has proprietary information deleted. The deleted information is identified by sidebars in the right margin next to the affected text, tables and figures. This paragraph has a sidebar as an example.

Stand-alone GE proprietary information is identified by sidebars in the right margin next to the affected text, tables and figures containing stand-alone proprietary information. This paragraph has a sidebar as an example. Specific information that is not so marked, when taken out of the context of this report, is not GE proprietary.

DISCLAIMER OF RESPONSIBILITY

Important Notice Regarding the Contents of this Report

Please Read Carefully

The only undertaking of General Electric Company respecting information in this document are contained in the contract between NMPC and General Electric Company, and nothing contained in this document shall be construed as changing the contract. The use of this information by anyone other than NMPC or for any purpose other than that for which it is intended is not authorized; and with respect to any unauthorized use, General Electric Company makes no representation or warranty, and assumes no liability as to the completeness, accuracy, or usefulness of the information contained in this document.

Table of Contents

Subject **Page No.**

1. EXECUTIVE SUMMARY 1
2. INTRODUCTION AND BACKGROUND 3
   - 2.1. BACKGROUND 3
   - 2.2. REPORT OUTLINE 3
   - 2.3. REFERENCES 4
3. DESCRIPTION OF H4 WELD CRACKING 6
   - 3.1. RF07 UT INSPECTION DATA 6
   - 3.2. REFERENCES 6
4. CRACK GROWTH RATE CONSIDERATIONS 9
   - 4.1. CRACK GROWTH RATES 9
   - 4.2. FLUENCE CONSIDERATIONS 10
   - 4.3. REFERENCES 11
5. STRUCTURAL EVALUATION METHODOLOGY 15
   - 5.1. LIMIT LOAD 15
   - 5.2. LEFM 16
   - 5.3. EPFM 17
   - 5.4. TECHNICAL JUSTIFICATION FOR LIMIT LOAD CONFIGURATION 20
   - 5.5. REFERENCES 20
6. STRUCTURAL MARGIN EVALUATION RESULTS 24
   - 6.1. LOADINGS 24
   - 6.2. LIMIT LOAD EVALUATIONS 24
   - 6.3. LEFM EVALUATION 25
   - 6.4. EPFM EVALUATION 25
   - 6.5. SUMMARY OF STRUCTURAL EVALUATION RESULTS 26
7. CONSERVATISMS IN EVALUATION 36
8. SUMMARY AND CONCLUSIONS 37

List of Tables

Table 3-1 UT Indications 2000 Inspections and Crack Depths 7
Table 6-1 Summary of Limit Load Margins for Several Cases 27

List of Figures

Figure 2-1 Weld Designations Used in NMP2 Shroud Cracking Evaluation (Weld azimuths are typical, and may not be located exactly as specified in above figure) 5
Figure 4-1 EOC 9 Nominal Fluence – Through Thickness Profile 12
Figure 4-2 EOC 9 Nominal Plus 1- Sigma Fluence – Through Thickness Profile 13
Figure 4-3 EOC 9 Nominal Plus 2-Sigma Fluence – Through Thickness Profile 14
Figure 5-1 Compound Crack Geometry 21
Figure 5-2 Material J-T Curve corresponding to Fluence of $5x10^{20}$ n/cm^2 22
Figure 5-3 J-R Curves for Two Irradiated Stainless Steel Specimens at Fluence of $8x10^{20}$ n/cm^2 23
Figure 6-1 DLL Run output for the Nominal Limit Load Case 28
Figure 6-2 DLL Run output for the LEFM Case 31
Figure 6-3 EPFM Margin Evaluation Process 35

1. EXECUTIVE SUMMARY

The H4 shroud weld at NMP2 was inspected during refueling outages in 1998 (RF06) and 2000 (RF07). A structural margin evaluation considering RF07 inspection results for the H4 weld, provided technical justification for continued operation to at least the end of cycle 8. Noble metal chemical application (NMCA or NobleChem™) at NMP2 took place in September 2000. Hydrogen injection was started in January 2001. Although these intergranular stress corrosion cracking (IGSCC) mitigation measures were implemented during cycle 8, conservatively a factor of two improvement in the assumed crack growth rate has been applied for cycle 9 only. The objective of this report is to describe the structural evaluation methodology used and document the results of evaluation in support of continued operation of H4 weld to RF09.

Structural margins for continued operation of H4 weld to the end of cycle 9 were evaluated two ways. First, the limit load calculations were conducted for a configuration in which through-wall flaws were assumed in regions where the ID surface fluence at the end of cycle 9 exceeded $3x10^{20}$ n/cm^2. Since all of the areas taken credit for had a fluence less than the threshold value of $3x10^{20}$ n/cm^2, a limit load evaluation constituted a complete structural margin evaluation and no linear elastic fracture mechanics (LEFM) or elastic plastic fracture mechanics (EPFM) evaluations were necessary. Secondly, LEFM and EPFM calculations were conducted for the assumed configuration in which through-wall cracking was assumed where the ID surface fluence exceeded $5x10^{20}$ n/cm^2.

For the limit load structural margin calculation, the following assumptions were used to develop a nominal case in which no LEFM or EPFM evaluation was required:

- The initial crack depth in all of the regions that were found cracked was assumed to be equal to the maximum found value of 0.78 inch.
- The crack growth rate for cycle 8 was assumed to be $2.2x10^{-5}$ in/hr and the rate for cycle 9 was assumed to be $1.1x10^{-5}$ in/hr. The cycle 9 rate reflected a factor of two improvement based on HWC and NMCA.
- The initial crack depth in the uninspected regions was assumed to be equal to the maximum found value of 0.78 inch.
- Regions where the ID surface fluence was greater than $3x10^{20}$ n/cm^2 were assumed through-wall.

The calculated safety factor for the nominal case was determined to be 4.98, which exceeds the required value of 2.77. The safety factor for some of the more limiting assumptions, such as assuming through-wall flaws in the uninspected regions, were also calculated and were shown to be in excess of the required value of 2.77.

To demonstrate structural margin in the LEFM regime, a configuration similar to the limit load nominal case was used except that through-wall cracking was assumed in

regions where ID fluence exceeded $5x10^{20}$ n/cm^2 instead of $3x10^{20}$ n/cm^2. The calculated value of the highest stress intensity factor was 49.2 ksi√in that is less than the allowable value of 54.2 ksi√in.

Additional evaluation with EPFM was also conducted to demonstrate higher available structural margins. The EPFM evaluation was conducted by first determining an equivalent single through-wall flaw to conservatively model the LEFM configuration. The applied J-integral values were calculated using the EPRI ductile fracture handbook. A conservative material J-T curve corresponding to a fluence level of $5x10^{20}$ n/cm^2 was used in the evaluation. The EPFM evaluation showed the structural margin for this case to be 4.0, which exceeds the required value of 2.77.

Based on the results of these limit load, LEFM and EPFM structural margin evaluations, it is concluded that the required structural margins will be maintained at the NMP2 shroud H4 weld for operation through the end of cycle 9.

2. INTRODUCTION AND BACKGROUND

2.1. BACKGROUND

The Nine Mile Point Unit 2 (NMP2) shroud material is SA-240 Type 304L plate. The shroud thickness is 2 inches. Figure 2-1 shows the shroud weld designations. Several indications were identified during the RF06 inspection of the shroud. Based on the criteria outlined in BWRVIP Core Shroud Inspection & Evaluation Guidelines [BWRVIP-01, Rev. 2, Reference 2-1], NMP2 was classified as a Category B plant prior to the RFO6 inspections. As a result of the inspections performed, significant cracking (>10 percent of inspected length) was observed in the horizontal weld H4. Per the BWRVIP-01 criteria, if cracking in any of the welds is greater than 10 percent of the inspected weld length, then a Category C inspection is required. Based on Category C requirements, all eight shroud horizontal welds were required to be inspected. Additional inspections indicated significant cracking of the H5 and H7 welds, and minor cracking of welds H1, H2, H3, and H8. No cracking of weld H6 was observed. The indications were evaluated, and the NMP2 shroud was justified for continued operation for at least one fuel cycle of operation following RF06 as documented in Reference 2-2. Reference 2-3 provided technical justification for continued operation of welds H5 and H7 to at least one cycle following RF07.

The H4 and H5 welds were reinspected during RF07. References 2-4 and 2-5 considered the RF07 inspection results and justified continued operation of H4 weld to at least RF08. Reference 2-5 also supplied justification for continued operation of H5 weld for at least three cycles of operation following RF07.

Noble metal chemical application (NMCA) at NMP2 took place in September 2000. Hydrogen injection was started in January 2001. The desired hydrogen injection rate (i.e., the point at which crack mitigation occurs) was achieved on approximately February 14, 2001.

The objective of this report is to describe the structural evaluation methodology used and document the results of evaluation in support of continued operation of H4 weld to RF09.

2.2. REPORT OUTLINE

Section 3 of this report describes the UT inspection results at the H4 weld. Crack growth rates used in the evaluation are discussed in Section 4. This section also discusses the fluence level at this weld at the end of cycle 9. The limit load , LEFM and EPFM methodologies, and their assumptions are covered in Section 5. Section 6 presents the results of the evaluation. Conservatisms used in the structural margin evaluation are discussed in Section 7. Finally, Section 8 presents the summary of the results of the structural margin evaluations and the conclusions.

2.3. REFERENCES

[2-1] BWRVIP-01, Rev. 1, "BWR Core Shroud Inspection and Flaw Evaluation Guidelines," March 1995.

[2-2] "Evaluation of NMP2 shroud Cracking for at Least One Fuel Cycle of Operation Following RF06," GENE-B13-01920-63, Revision 2, June 1998.

[2-3] "Shroud H5 & H7 Fracture Mechanics Analysis," Report No. B13-02047-00-17-LT1, November 24, 1999.

[2-4] "Shroud Weld H4 Fracture Mechanics Analysis," Report No. B13-02072-00-LT3, March 16, 2000.

[2-5] Letter No. NMP2L 1961 from Niagara Mohawk to US Nuclear Regulatory Commission, Subject: Core Shroud Reinspection Results (TAC No. MA7284)," April 28, 2000.

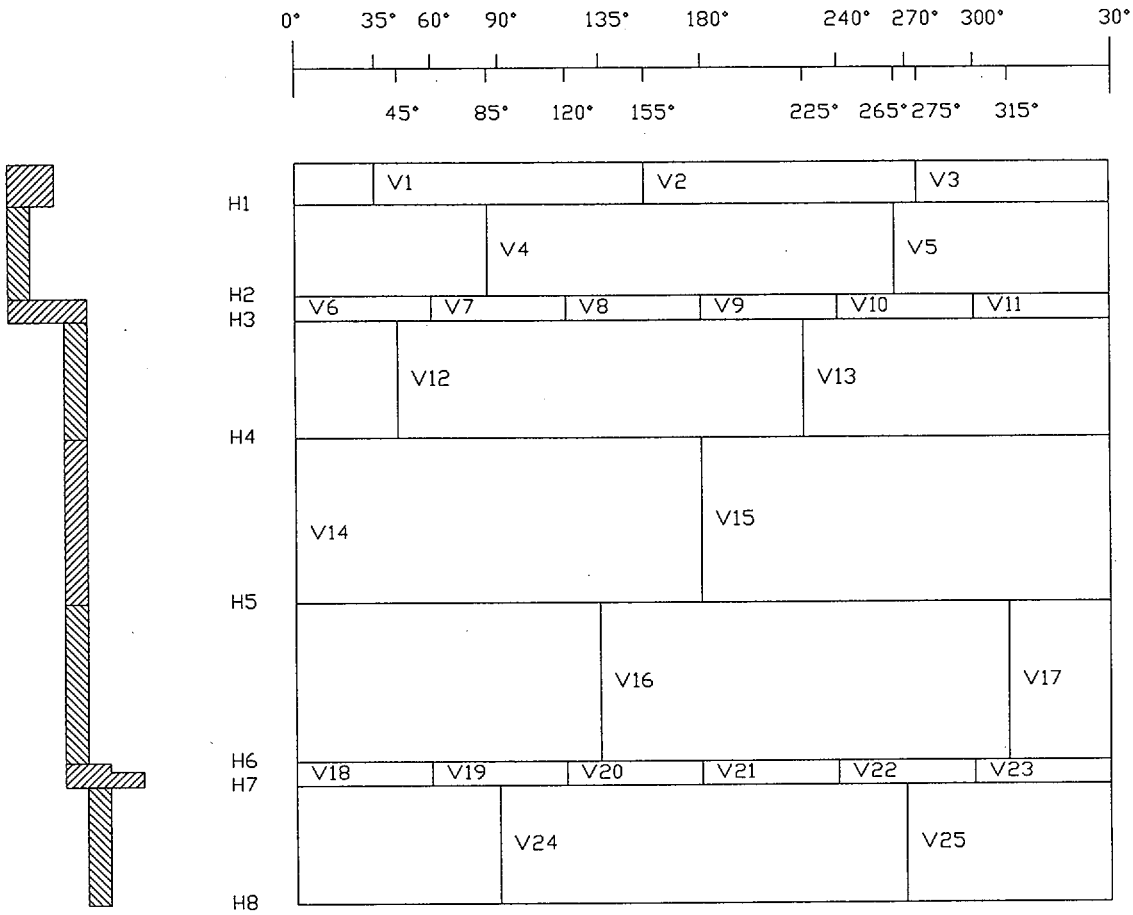

Figure 2-1 **Weld Designations Used in NMP2 Shroud Cracking Evaluation (Weld azimuths are typical, and may not be located exactly as specified in above figure)**

3. DESCRIPTION OF H4 WELD CRACKING

3.1. RF07 UT INSPECTION DATA

The UT data taken from OD Tracker are documented in Reference 3-1. The crack data as used in the evaluation are shown in Table 3-1. For the purpose of evaluation, the upper and lower side cracks were combined. This table also shows the start and end azimuths of the uninspectable regions. All of the indications are at the OD of the shroud.

Based on Reference 3-2, the UT reported crack lengths and depths for evaluation purposes were increased as follows to account for the measurement uncertainties:

- The nominally reported indication lengths calculated from the start and end azimuth values were increased by 0.364 inch at each end to account for length uncertainty.
- The indication lengths were further increased by 0.082 inch at each end to account for the delivery system uncertainty.
- An uncertainty value of 0.108 inch was added to the reported indication depths.

The preceding values of measurement uncertainties remained unchanged in the subsequent publications of revisions 2 and 3 of the Reference 3-2 report.

3.2. REFERENCES

[3-1] "NMP2 Core Shroud Cracking Evaluation," Niagara Mohawk Power Corporation - Nine Mile Point Unit 2, Nuclear Engineering Report No. NER-2M-040, Revision 1, April 2000.

[3-2] BWRVIP-03, Revision 1, "Reactor Pressure Vessel and Internals Examination Guidelines," EPRI Report No. TR-105696, March 1999.

Table 3-1 UT Indications 2000 Inspections and Crack Depths

No.	Start Azimuth	End Azimuth	Maximum Depth (in.)
1	1.6	19.8	0.61
2	24.1	35.0	0.76
3	53.1	56.2	0.44
4	57.1	60.1	0.53
5	60.1	66	0.76
6	66.5	75.3	0.72
7	75.7	79.9	0.55
8	92.8	96.9	0.49
9	98.2	99.2	0.40
10	100.5	102.5	0.36
11	103	105.9	0.43
12	106.8	107.5	0.54
13	107.6	108.4	0.50
14	108.6	110.4	0.50
15	113.1	114.4	0.32
16	115.7	117.6	0.51
17	119	120	0.36
18	120.2	121.1	0.37
19	122.5	123.1	0.30
20	124	126.08	0.49
21	141.4	143.4	0.51
22	145.4	147.3	0.44
23	147.8	155.7	0.56
24	155.9	158.4	0.62
25	159.7	160.9	0.46
26	161.2	162.2	0.41
27	167.6	168.3	0.39
28	169.1	170	0.27
29	170.6	171.7	0.28
30	191.6	194.8	0.44
31	194.8	203.1	0.53
32	203.7	218.9	0.53
33	218.9	220.3	0.46
No.	**Start Azimuth**	**End Azimuth**	**Maximum Depth (in.)**
34	220.4	230.2	0.50

35	230.2	247.3	0.70
36	247.3	250.9	0.68
37	251.2	255.3	0.61
38	255.3	266.4	0.49
39	268	269.2	0.33
40	271.1	277.9	0.61
41	278.6	292.2	0.74
42	292.5	304.8	0.78
43	320.7	331.7	0.55
44	331.7	332.2	0.30
45	332.2	341.5	0.43
46	341.8	343.9	0.43
47	344.6	355.7	0.56

Note: Some of the indications were identified by less than the full complement of 3 transducers.

Uninspected Regions

Start Azimuth	End Azimuth
0.0	2.6
18.7	22.9
35.0	54.9
77.4	85.9
125.0	140.7
174.9	182.6
305.0	320.7
342.9	345.6
354.7	360.0

Note: The uninspected regions are defined as those covered by less than full complement of 3 transducers.

4. CRACK GROWTH RATE CONSIDERATIONS

This section described the process used in determining the final cracked geometry for structural evaluation based on the initial as-found cracking depth determined by UT with the uncertainties and appropriate crack growth added.

4.1. CRACK GROWTH RATES

The guidance for the crack growth rates (CGR) used in the evaluation of BWR stainless steel internals is provided in BWRVIP-14 (Reference 4-1) as modified by the stipulations given in the NRC's final SER (Reference 4-2) on this report. The SE stated, in part, "...by using an appropriately reduced value for the CGR from the $5x10^{-5}$ in/hr value found in NUREG-0313, Rev. 2, it would be possible for licensees to get credit for improved water chemistry and other measures to mitigate cracking, e.g., hydrogen water chemistries (HWC) and/or noble metal additions. The revised CGR of $2.2x10^{-5}$ in/hr corresponds to water chemistries with a conductivity of $\leq$ of 0.15 μS/cm and an electro-chemical potential (ECP) of +200 mV. The BWRVIP-14 correlation indicates that this bounding CGR could be reduced for HWC with ECP $\leq$ -230 mV. The staff finds acceptable a reduction in the CGR from $2.2x10^{-5}$ in/hr to $1.1x10^{-5}$ in/hr for plants with HWC. The crack growth rates stated are only applicable to components with fluences < $5x10^{20}$ n/cm^2 (E>1 MeV) since the CGR database is presently based only on unirradiated materials."

Both the noble metal chemical application (NMCA) and hydrogen injection were implemented at NMP2 during fuel cycle 8. The NMCA took place in September 2000. The hydrogen injection was started in January 2001. The desired hydrogen injection rate (i.e., the point at which crack mitigation occurs) was achieved on approximately February 14, 2001. No credit for HWC was taken for CGR in cycle 8. Thus, for cycle 8 operation, a conservative (since it did not take credit for NMCA) CGR of $2.2x10^{-5}$ in/hr was assumed in the depth direction. For cycle 9, a CGR of $1.1x10^{-5}$ in/hr was assumed since the HWC is expected to be effective during this period. Since NMP2 operates on a two-year fuel cycle (16000 hours), these assumptions resulted in calculated values of crack growths of 0.352 inch for cycle 8 and 0.176 inch for cycle 9. The total projected crack growth in the depth direction is (0.352+0.176) or 0.528 inch.

The NRC has recently accepted the BWRVIP-14 K-dependent crack growth correlation [4-3]. Application of the K-dependent CGR correlation is allowable for crack depths up to 80% through-wall. The K-dependent correlation can be applied for core shroud horizontal welds based on the generic K distribution biased consistent with Reference 4-3 requirements. The application of the K-dependent CGR consistent with these requirements is estimated to reduce the total crack growth to 0.24 inch for the entire cycle

8 and cycle 9 operating period assuming normal water chemistry for both cycles. This translates into better than a factor of two margin (0.528/0.24) on crack growth assuming no credit for HWC/NMCA mitigation as compared to the crack growth assumptions used in this analysis.

For the length direction, a conservative CGR of $5x10^{-5}$ in/hr was used for both the fuel cycles.

4.2. FLUENCE CONSIDERATIONS

The neutron fluence calculations for NMP2 shroud are documented in Reference 4-4. The fluence level at the H4 weld has two types of symmetries. First, the fluence values from 45° to 90° azimuths are a mirror image of those from 0° to 45° azimuths. Second, the fluence distributions in the other quadrants are symmetric with respect to the 0°-90° quadrant. Figures 4-1 through 4-3 graphically depict the fluence values at the H4 weld.

The one sigma neutron flux uncertainty was determined in Reference 4-4 to be 16.6% for the shroud H4 location. The structural analysis applied a plus two sigma (33.2%) increased fluence for cycle 8 and a similar increase for cycle 9. The application of the two sigma results in 22° segments projected to exceed $5x10^{20}$ n/cm^2 by the end of cycle 9 versus 10° based on the nominal ID fluence. All the H4 UT indications are on the OD surface with the cracks propagating toward the ID surface, growing into higher fluence regions. The maximum projected depth at the end of cycle 9 credited in the structural analysis is 1.42 inches resulting in a remaining ligament of 0.58 inch measured from the ID based on BWRVIP-14 CGR. If the actual crack tip location at the end of cycle 9 is used, the 22° segments are reduced to 12° segments even assuming two sigma flux. If these two conservative assumptions are removed, the nominal maximum projected through-wall extent is 5°. The length of the throughwall crack assumption for areas where fluence exceeds $5x10^{20}$ n/cm^2 is the controlling parameter in the LEFM analysis. The application of the 2-sigma ID fluence at the end of cycle 9 adds approximately a factor of two conservatism to the calculated LEFM safety factor. The nominal fluence at the crack tip further increases the LEFM safety factor. The application of both the ID assumption and 2 sigma fluence compared to the nominal through-thickness fluence adds conservatism in the LEFM safety factor by more than three.

The limit load analyses assume through-wall cracking at locations exceeding $3x10^{20}$ n/cm^2. The through-wall cracking based on ID EOC 9 fluence plus 2 sigma is 29° versus 25° for the nominal. The through wall cracking based on nominal fluence at the crack tip results in 22° segments exceeding the $3x10^{20}$ n/cm^2 threshold at the end of cycle 9.

The fluence calculations to end of cycle 9 also include conservatism in the form of assumed full power days (EFPD) for cycles 8 and 9. Based on a review of plant cycle

history, cycle 7 exposure was ~ 545 EFPD (which was the maximum achieved since power uprate). Fluence projection for cycles 8 and 9 was based on 1.82 EFPY or 664.3 EFPD. Therefore, approximately 18% conservatism in the nominal fluence values exists based on the historical plant information.

Based on the preceding it is concluded that the determination of the threshold locations of $3x10^{20}$ n/cm^2 and the $5x10^{20}$ n/cm^2 as applied in the structural analysis includes conservative margins that account for the fluence analysis uncertainties associated with the projected fluence through the end of cycle 9 operations.

4.3. REFERENCES

[4-1] BWRVIP-14, "BWR Vessels and Internals Project, Evaluation of Crack Growth in BWR Stainless Steel Internals," EPRI Report No. TR-105873, March 1996.

[4-2] Final Safety Evaluation of Proprietary Report TR 105873 "BWR Vessels and Internals Project, Evaluation of Crack Growth in BWR Stainless Steel Internals (BWRVIP-14)" (TAC No. M94975), December 3, 1999.

[4-3] NRC clarification letter, July 20, 2001,"Clarification to NRC letter regarding BWRVIP response to BWRVIP-14 final safety evaluation (TAC No. M94975)

[4-4] "NMP2 Core Shroud Fluence Analysis," Niagara Mohawk Power Corporation Nuclear Engineering Report, NER-2M-065, Rev. 0 (based on, "NMP2 Core Shroud Fluence Analysis," prepared by MPM Technologies, report no. MPM-301624).

Figure 4-1 EOC 9 Nominal Fluence – Through Thickness Profile

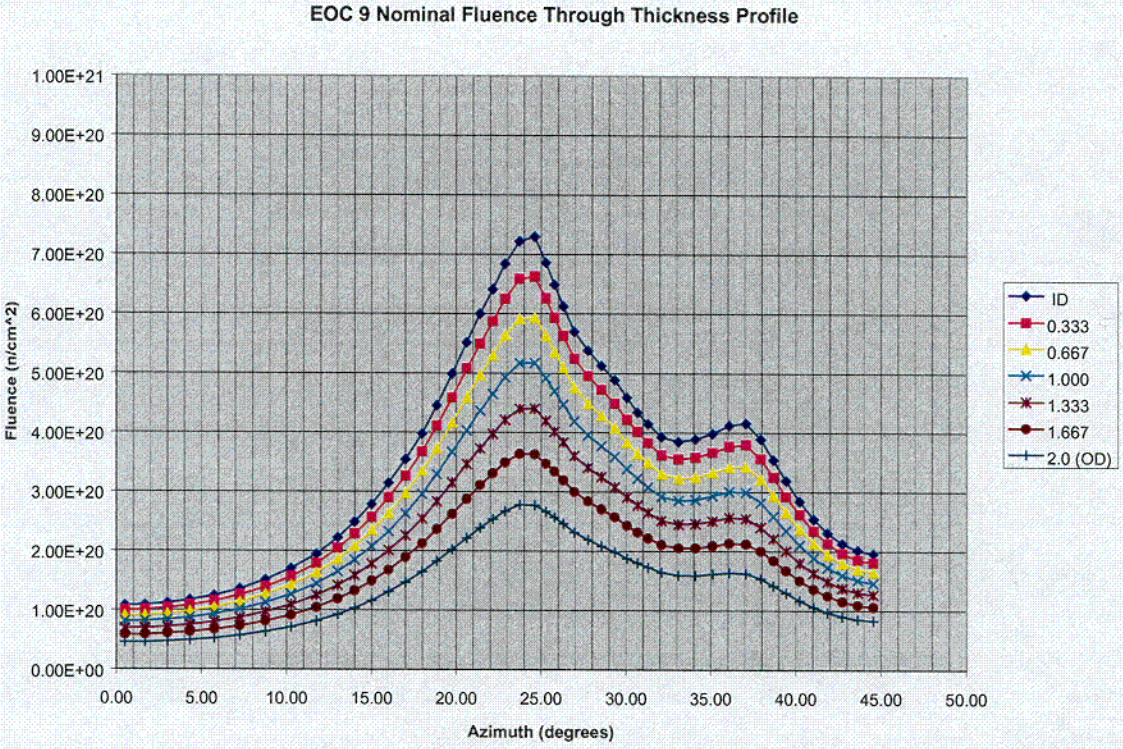

C01

Figure 4-2 EOC 9 Nominal Plus 1- Sigma Fluence – Through Thickness Profile

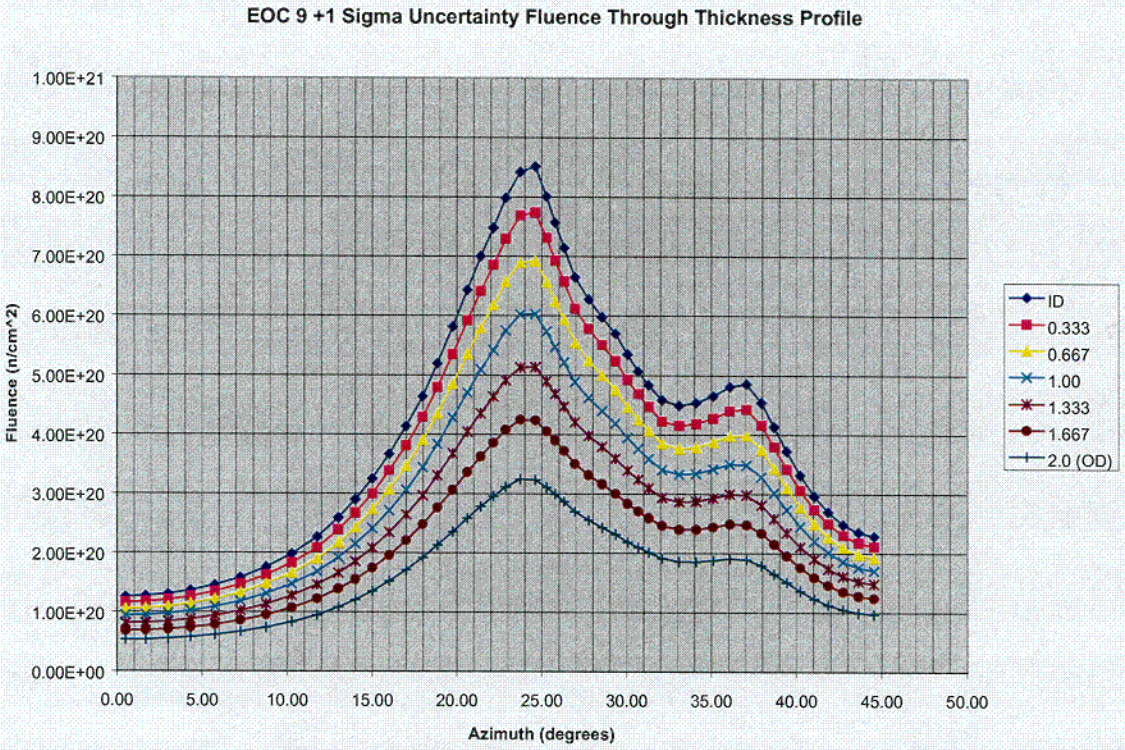

C02

Figure 4-3 EOC 9 Nominal Plus 2-Sigma Fluence – Through Thickness Profile

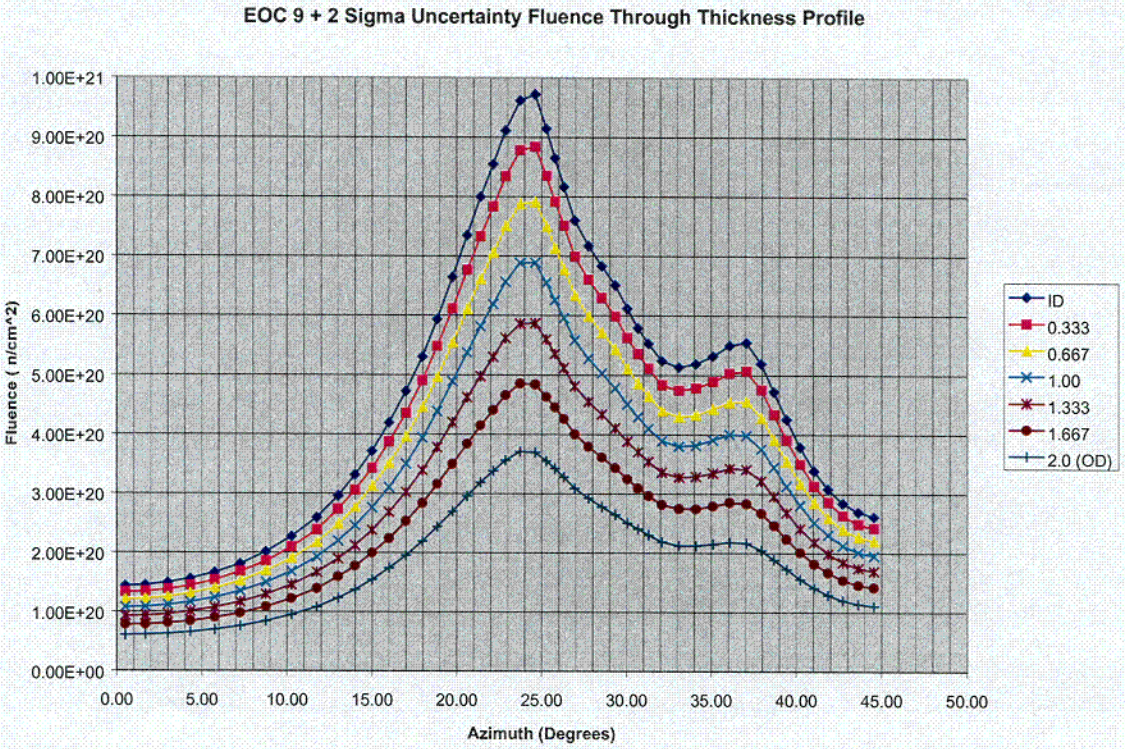

C03

5. STRUCTURAL EVALUATION METHODOLOGY

The BWRVIP-01, Revision 1 report (Reference 2-1) has been reviewed and approved by the US Nuclear Regulatory Commission (NRC) with certain stipulations as described in its safety evaluation reports (Reference 5-1). Section 4.0 of BWRVIP-01 describes the flaw evaluation methodology suggested for use in evaluating cracking in core shrouds. Three techniques for the flaw evaluation are recognized: (1) linear elastic fracture mechanics (LEFM), (2) limit load, and (3) elastic-plastic fracture mechanics (EPFM). The LEFM methodology coupled in addition to the limit load approach is appropriate when the fluence level at a weld exceeds $3x10^{20}$ n/cm^2 (E>1 MeV). At lower fluence levels, only limit load evaluation is necessary. The EPFM approach may be used in lieu of LEFM when deemed necessary to demonstrate additional margin.

The LEFM approach described in BWRVIP-01 is based on the assumption of a through-wall circumferential flaw geometry in a cylindrical shell and provides for two types of corrections to the basic equation for stress intensity factor (K) calculation: (1) shell or curvature correction factor, and (2) the flaw interaction correction factor.

The limit load approach includes consideration of a Distributed Ligament Length (DLL). A later BWRVIP-20 report (Reference 5-2) included a computer program (DLL, Version 2.1) that incorporated the distributed ligament length limit load approach. The DLL computer program also provides for LEFM evaluation when the specified fluence level exceeds $3x10^{20}$ n/cm^2. A closed-form limit load expression for a 360° crack was also provided in BWRVIP-01.

The flaw proximity rules of BWRVIP-01 were followed in deciding whether to combine the adjacent flaws. Also, the structural evaluation methodology used in this report essentially follows the guidelines provided in BWRVIP-01 with some modifications as discussed next.

5.1. LIMIT LOAD

The limit load analyses were conducted using the DLL computer code (Reference 5-2). The DLL computer code uses the limit load methodology outlined in Reference 2-1. The configuration considered in calculating the limit load structural margin was developed using the following assumptions:

- Reference 2-1 states that if the fluence level at a weld is less than $3x10^{20}$ n/cm^2, only a limit load evaluation is adequate to address the structural integrity of the shroud. The peak ID fluence for the H4 weld at the end of cycle 9 is in excess of $3x10^{20}$ n/cm^2. Therefore, the approach adopted to demonstrate adequate structural

margin at the H4 weld using only the limit load evaluation, was to consider the cracked weld configuration in which areas exceeding ID fluence level of $3x10^{20}$ n/cm^2 are excluded. A similar approach also has been suggested in BWRVIP-76 (Reference 5-3). The technical justification for this approach is provided later in this section.

- In the uninspected areas, the initial crack depth was assumed equal to the maximum value measured anywhere at the weld (Table 3-1). The BWRVIP-76 guidance allows credit for uninspected regions provided the inspection coverage is greater than 50% of the circumference. Application of this guidance to RFO6 and 7 inspection results eliminates the need to assume that the uninspected regions are 100% flawed. The BWRVIP-76 guidance then allows the flawed region cracking depth to be assumed equivalent to the average of the cracking identified in the inspected region. The uninspected region assumption guidance found in BWRVIP-76 is the same as that found in BWRVIP-63 (Reference 5-4). The NRC's final safety evaluation report on BWRVIP-63 (Reference 5-5) states that the maximum measured crack depth should be assumed for plants operating with normal water chemistry (NWC) and that the plants operating with HWC or NMCA could use the average depth of the observed cracks in the inspected region. The evaluations in this report assume the maximum measured crack depth for cracking in the uninspected region. Therefore, this assumption is conservative with respect to operation during cycle 9.

  Supplementary calculations for limit load margins where uninspected areas were assumed cracked through-wall, also were conducted and the results reported later in this section.

5.2. LEFM

For the LEFM evaluation, the cracked H4 weld configuration was based on the conservative assumption of through-wall cracks where the ID fluence at the end of cycle 9 exceeds $5x10^{20}$ n/cm^2. The fluence distribution used in this analysis included an increase of 2σ over the nominal values to conservatively account for uncertainty. This assumption results in eight through-wall segments each of which is 22° long. This results in a complex geometry that has part through-wall cracked segments and eight through-wall cracked segments. The BWRVIP-01 does not provide explicit guidance for the LEFM evaluation of such a circumferentially cracked geometry. Therefore, an alternate approach used earlier in Reference 2-2 was used.

Reference 5-6 provides the following analytical expression for the calculation of K for a compound circumferential crack geometry (Figure 5-1):

$$K_I = \sigma_b (\pi R\theta)^{0.5} F_b \qquad (5\text{-}1)$$

where,

σ_b = Applied bending stress
$F_b = F_0\,[1.0 + A\{4.5967(\theta/\pi)^{1.5} + 2.6422(\theta/\pi)^{4.24}\}]$
$F_0 = [(1 + x)(1-x)^2\{1.0 + 0.5x/(R/t)\}]^{-0.5}$
$A = [0.125(R/t) - 0.25]^{0.25}$
$x = a/t$
R = Average radius of cylinder = Outer radius, R_0 - t/2
t = Cylinder thickness
a = Crack depth in part through-wall crack
θ = Half angle of through-wall crack

A review of the preceding analytical expression indicates that factor F_b consists of two parts: F_0 and a shell correction factor representing the terms in the bracket. Factor F_0 accounts for the presence of 360° part through-wall crack of depth equal to 'a'. Thus, factor F_0 can be used to scale up the stresses for a DLL LEFM evaluation.

The maximum calculated value of the projected crack depth at the end of cycle 9 was 1.42 inches, leaving a remaining ligament of 0.58 inch. Thus the value of 'a' is 1.42 for the purpose of calculating F_0. Using R=102.6 inches and t=2.0 inches, the value for F_0 was obtained as 2.62. Therefore, the applied P_m and P_b stresses were multiplied by 2.62 for the LEFM calculation purposes. The K values were then calculated using the LEFM option in the DLL computer program that treats through-wall cracking and any interactions between multiple through-wall cracks.

5.3. EPFM

The EPFM approach used in this evaluation is based on the J-integral calculation schemes provided in the EPRI handbook (Reference 5-6). The solutions given in the handbook are for a cylinder with a through-wall crack subjected to either axial tension or bending. The key task in the calculation was to define a single through-wall flaw geometry that is equivalent to several smaller through-wall flaws.

The solutions used are the following:

<u>Axial Tension</u>

$$J = f_t \bullet P^2/(4Rt^2E) + \alpha\sigma_0\varepsilon_0R(\pi - \theta) \bullet H_1 \bullet (P/P_0)^{n+1} \qquad (5\text{-}2)$$

Where,
$f_t = (\theta_e/\pi)[1+A\{5.3303((\theta_e/\pi)^{1.5} + 18.773(\theta_e/\pi)^{4.24}\}]^2$
$\theta_e = \theta\bullet[1 + (F_t^2/\beta)\bullet\{(n-1)/(n+1)\}\bullet(\sigma_t/\sigma_0)^2/\{1 + (P/P_0)^2\}]$
$F_t = 1 + A[5.3303(\theta/\pi)^{1.5} + 18.773(\theta/\pi)^{4.24}]$

$A = [0.125(R/t) - 0.25]^{0.25}$ for $5 \leq R/t \leq 10$
$A = [0.4(R/t) - 3.0]^{0.25}$ for $10 \leq R/t \leq 20$
$\sigma_t = P/2\pi Rt$
$P_0 = 2\sigma_0 Rt[\pi - \theta - 2\arcsin(0.5\sin\theta)]$

P is the axial load. H_1 depends upon θ/π, n, and R/t. β was assumed as 6.0 corresponding to plane strain condition. R, t, and θ are the cylinder mean radius, wall thickness, and crack half-angle, respectively. α, σ_0, ε_0, and n are constants in the Ramberg-Osgood stress-strain relationship

$$\varepsilon/\varepsilon_0 = \sigma/\sigma_0 + \alpha(\sigma/\sigma_0)^n \qquad (5\text{-}3)$$

The σ_0 and $\varepsilon/\varepsilon_0$ are reference stress and reference strain, respectively, and are related to each other by the relationship $\sigma_0/\varepsilon_0 = E$. The σ_0 is 0.2 percent offset yield strength and E is the elastic modulus.

Bending Moment

$$J = f_b \bullet M^2/(R^3t^2E) + \alpha\sigma_0\varepsilon_0 R\pi(1 - \theta/\pi)^2 \bullet H_1 \bullet (M/M_0)^{n+1} \qquad (5\text{-}4)$$

Where,
$f_b = (\theta_e/\pi)[1+A\{4.5967((\theta_e/\pi)^{1.5} + 2.6422(\theta_e/\pi)^{4.24}\}]^2$
$\theta_e = \theta\bullet[1 + (F_b^2/\beta)\bullet\{(n-1)/(n+1)\}\bullet(\sigma_b/\sigma_0)^2/\{1 + (M/M_0)^2\}]$
$F_b = 1 + A[4.5967(\theta/\pi)^{1.5} + 2.6422(\theta/\pi)^{4.24}]$
$A = [0.125(R/t) - 0.25]^{0.25}$ for $5 \leq R/t \leq 10$
$A = [0.4(R/t) - 3.0]^{0.25}$ for $10 \leq R/t \leq 20$
$\sigma_t = M/\pi R^2 t$
$M_0 = 4\sigma_0 R^2 t[\cos(\theta/2) - 0.5\sin\theta]$

M is the applied moment. H_1 depends upon θ/π, n, and R/t. All other quantities have the same meaning as in the axial tension case.

The shroud R/t value is approximately 50 and it is subjected to both axial tension and bending moment loading. Therefore, the J-integral calculations were conducted using the following approach:

- The value for A at R/t = 50 was calculated using the same equation as that for A in the range of R/t of 10 to 20.
- Values for H_1 at R/t =50 were calculated by either linear extrapolation or polynomial fit (whichever was more conservative) of the trend from R/t of 5 through 20.
- The structural margin for the combined axial tension (P_m) and bending moment (P_b) case were obtained by following a 'Goodman Diagram' type of approach.

Once the $J_{applied}$ values from equations (5-2) and (5-4) were obtained, the applied tearing modulus (T) was calculated using the following equation from Reference 2-1:

$$T_{applied} = (E/\sigma_f^2) \bullet (\partial J_{applied}/\partial a) \qquad (5\text{-}5)$$

Material Stress-Strain Values

The applied J and T calculations need material stress-strain property values such as σ_0, α, E and strain hardening exponent 'n'. Since the areas considered in the EPFM evaluations have fluence no greater than $5x10^{20}$ n/cm^2, the values of preceding parameters at this fluence level were based on Table 3-2 of Reference 5-7. The NMP2 shroud material is Type 304L stainless steel whereas the property values given in Reference 5-7 are for Type 304 stainless steel. Therefore the Type 304 stainless steel yield stress, σ_0, was modified to account for the yield stress difference between the regular and L-grade Type 304 stainless steel. A review of the ASME Code specified 550°F yield strengths showed that the L-Grade yield strength is 15% lower compared to that for the regular grade stainless steel. Therefore, the yield strength value from Reference 5-7 was reduced by 15% for use in this evaluation. The values used in the evaluations of this report are the following:

A comparison of the σ_0 value shown above with the GE internal yield strength data on irradiated stainless steels showed that the assumed value is in the lower range of expected yield strength values. A lower value of assumed yield strength in an EPFM analysis is conservative (i.e., gives higher $J_{applied}$ value for the same applied load).

The value of σ_f for converting dJ/da into tearing modulus was assumed as 67400 psi, consistent with the value used in Reference 5-7 to covert the material dJ/da values into tearing modulus.

Material J-T Curve

The material J-T curve taken from Reference 5-7 corresponding to a fluence of $5x10^{20}$ n/cm^2, is shown in Figure 5-2. This curve is conservative with respect to the material toughness data at the fluence level of $8x10^{20}$ n/cm^2 shown in Reference 2-1 (see Figure 5-3). The intersection point of the material and applied J-T curves denotes the instability point. The membrane or bending stress corresponding to the intersection point is the instability stress.

5.4. TECHNICAL JUSTIFICATION FOR LIMIT LOAD CONFIGURATION

The preceding limit load analyses and the LEFM analysis were conducted with a H4 weld geometry in which regions exceeding ID fluence of either $5x10^{20}$ n/cm^2 or $3x10^{20}$ n/cm^2 were assumed cracked through-wall.

Figure 5-3 shows the test J-R curve for stainless steel material removed from an irradiated shroud. The estimated fluence was $8x10^{20}$ n/cm^2. The estimated fluence at the tip of the deepest crack (including the UT uncertainty and crack growth to end of cycle 9) at the NMP2 H4 weld is expected to be close to this value. The peak J-integral value reached in the test is approx. 1600 in-lb/in^2 or 280 KJ/m^2. This value of J-integral is equivalent to a K_J value of 212 ksi$\sqrt{\text{in}}$. The applied K values at the tip of the deepest projected crack (1.42 inch) is expected to be considerably less than this value. Therefore, it is concluded that any growth of cracks in regions with fluence level exceeding $5x10^{20}$ n/cm^2 is expected to occur in a stable manner.

5.5. REFERENCES

[5-1] Evaluation of "BWR Core Shroud Inspection and Evaluation Guidelines," GENE-523-113-0894, Revision 1, Dated March 1995, and "BWRVIP Core Shroud NDE Uncertainty & Procedure Standard," Dated November 22, 1994; USNRC, June 16, 1995.

[5-2] "BWRVIP Core Shroud Distributed Ligament Length (DLL) Computer Program (Version 2.1) (BWRVIP-20)", EPRI Report No. AP-107283, December 1996.

[5-3] "BWR Vessel and Internals Project: BWR Core Shroud Inspection and Flaw Evaluation Guidelines (BWRVIP-76)," EPRI Report No. 114232, November 1999.

[5-4] "BWR Vessel and Internals Project, Shroud Vertical Weld Inspection and Evaluation Guidelines (BWRVIP-63)," EPRI Report No. TR-113170, June 1999.

[5-5] NRC's Final Safety Evaluation of the "BWRVIP Vessels and Internals Project, Shroud Vertical Weld Inspection and Evaluation Guidelines (BWRVIP-63)," (TAC No. MA6015), August 20, 2001.

[5-6] "Ductile Fracture Handbook, Volume 1: Circumferential Through-wall Cracks", EPRI Report No. NP-6301-D, June 1989.

[5-7] "BWRVIP-85: BWR Vessel and Internals Project, Assessment of the Fracture Toughness of Irradiated Stainless Steel for BWR Core Shrouds," EPRI Interim Report No. 1000887, December 2000.

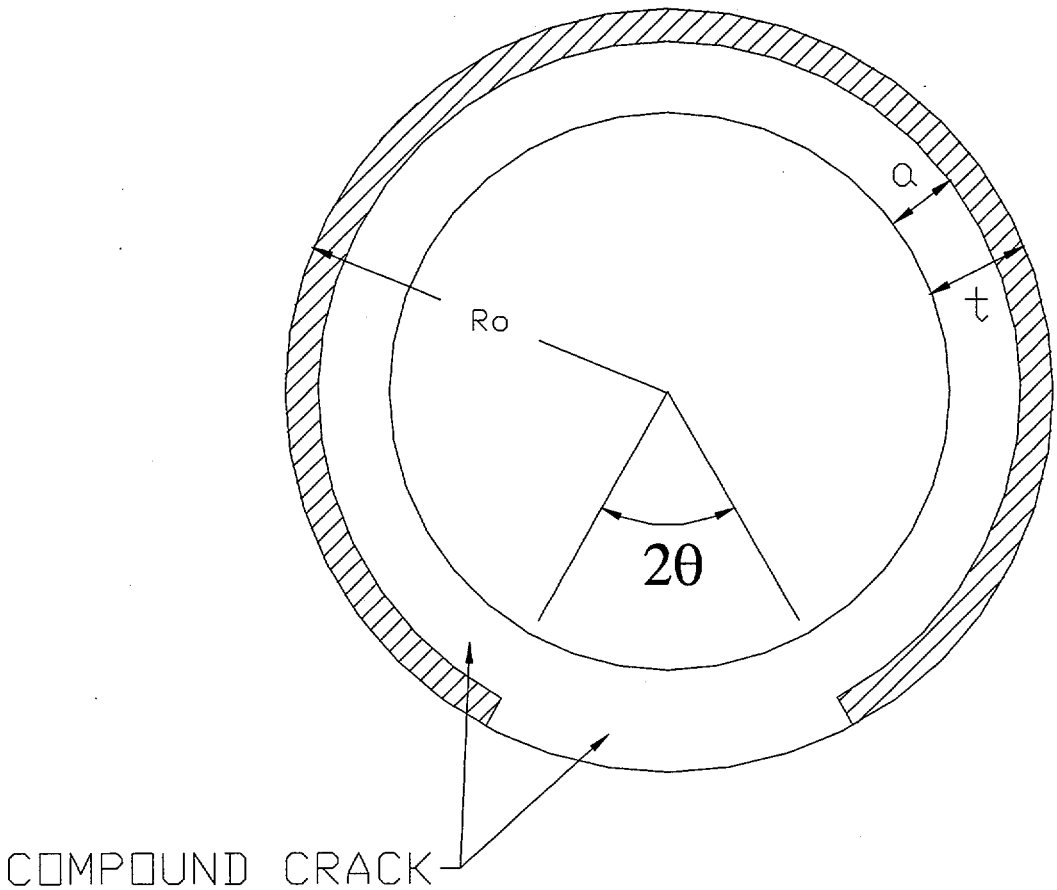

Figure 5-1 Compound Crack Geometry

Figure 5-2 Material J-T Curve corresponding to Fluence of $5x10^{20}$ n/cm^2

Figure 5-3 J-R Curves for Two Irradiated Stainless Steel Specimens at Fluence of $8x10^{20}$ n/cm^2

6. STRUCTURAL MARGIN EVALUATION RESULTS

This section presents the results of the structural margin calculations. The calculations were conducted two ways. First, the limit load calculations were conducted for a configuration in which through-wall flaws were assumed in regions where the ID surface fluence at the end of cycle 9 exceeded $3x10^{20}$ n/cm^2. Since all of the areas taken credit for had fluence less than the threshold value of $3x10^{20}$ n/cm^2, a limit load evaluation constituted a complete structural margin evaluation and no LEFM and EPFM evaluations were necessary. Secondly, LEFM and EPFM calculations were conducted for assumed configuration in which through-wall cracking was assumed where the ID surface fluence exceeded $5x10^{20}$ n/cm^2. All of the limit load, LEFM and EPFM calculations were conducted using the methodologies described in Section 5.

6.1. LOADINGS

The operating condition stresses at the H4 weld have been reported in previous analyses (References 2-4 and 2-5). It was determined that the normal/upset condition stresses are governing. This was done by comparing the ratios of the calculated safety factor divided by the required safety factor for the normal/upset and emergency/faulted conditions. The ratio for the normal/upset condition was smaller than that for the emergency/faulted condition. This indicated that the normal/upset condition is governing. The calculated stresses for the normal/upset condition are the following:

P_m = 328 psi
P_b = 1190 psi

The NMP2 shroud material is Type 304L stainless steel. Therefore, a S_m value of 14400 psi, corresponding to the design temperature of 550°F was used in the DLL evaluations.

6.2. LIMIT LOAD EVALUATIONS

The limit load calculations were first conducted for a nominal case that is defined as the following:

- The initial crack depth in all of the regions that were found cracked was assumed to be equal to the maximum found value of 0.78 inch.
- The crack growth rate for cycle 8 was assumed to be $2.2x10^{-5}$ in/hr and the rate for cycle 9 was assumed to be $1.1x10^{-5}$ in/hr, reflecting a factor of two improvement based on HWC and NMCA.

- The initial crack depth in the uninspected regions was assumed to be equal to the maximum found value of 0.78 inch.
- Regions where the ID surface fluence was greater than $3x10^{20}$ n/cm^2 were assumed through-wall. The fluence distribution used in this analysis included an increase of 2σ over the nominal value to conservatively account for uncertainty.

Figure 6-1 shows the output of the DLL run for this case. The calculated safety factor is 4.98. It is seen that the assumed metal thickness in all of the cracked inspected and uninspected regions is 0.58 inch; conversely the crack depth is (2.00-0.58) or 1.42 inch. The 1.42 value is the sum of the following: 0.78 inch as initial depth + 0.352 inch crack growth during cycle 8 (which is $2.2x10^{-5}$ in/hr x 16000 hours for a 2-year fuel cycle) + 0.176 inch crack growth for cycle 9 + UT uncertainty of 0.108 inch. Since the calculated margin of 4.98 is greater than the minimum required value of 2.77, the structural margin requirements at weld H4 are satisfied through the end of cycle 9.

The limit load calculations were conducted for several other cases also. In all of these cases, regions with ID surface fluence exceeding $3x10^{20}$ n/cm^2 were assumed as cracked through-wall. The results for the nominal case and the other limit load cases are summarized in Table 6-1.

6.3. LEFM EVALUATION

For the LEFM case, essentially the same geometry as the nominal limit load case was used except that the through-wall cracking was postulated only in regions where the ID fluence exceeded $5x10^{20}$ n/cm^2. The P_m and P_b values for the LEFM analysis were multiplied by 2.63 (see Section 5.2) to account for the reduction in thickness due to cracking in the part-through wall regions. The output of the DLL run for this case is shown in Figure 6-2. The Figure shows only the DLL output related to LEFM results. It is seen that the largest calculated value of K is 49.2 ksi$\sqrt{in}$ that is less than the allowable value of 54.2 ksi$\sqrt{in}$. This indicates a safety factor of 3.05 compared to the allowable value of 2.77. Therefore, LEFM requirements are satisfied. To demonstrate additional structural margin, an EPFM evaluation was conducted that makes use of additional load carrying capacity when the elastic-plastic nature of deformation is taken into account.

6.4. EPFM EVALUATION

The key first step in this evaluation is to determine equivalent single through-wall flaw geometry. The equivalent single through-wall flaw was determined by having its K value match or exceed the maximum K value calculated in the DLL LEFM run. In the preceding Subsection this value was determined as 49.2 ksi$\sqrt{in}$. This approach was proposed in Reference 5-5 and is technically judged as reasonable. A DLL evaluation showed this equivalent flaw to be 29° long (i.e., 2θ = 29 degrees). Therefore, the EPFM

calculations were conducted for this geometry with applied P_m and P_b the same as those used in the LEFM evaluation.

The applied J and T calculations were conducted using the stress-strain curve parameters and the methodology as described in Subsection 5.3. The material J-T curve used is shown in Figure 5-2. The calculated values of instability membrane and bending stresses were 14.4 ksi and 16.5 ksi, respectively. Figure 6-3 graphically illustrates the safety factor calculation process from the calculated values of membrane and bending instability stresses. The safety factor was calculated as 4.0 that exceeds the required value of 2.77. Therefore, it is concluded that the H4 weld configuration at the end of cycle 9 meets the structural margin requirements using EPFM procedures.

6.5. SUMMARY OF STRUCTURAL EVALUATION RESULTS

Limit load structural margins were calculated for a configuration where all regions with ID fluence greater than $3x10^{20}$ n/cm^2 were assumed through wall. For the nominal case, the calculated safety factor was 4.98 versus the required value of 2.77. Supplementary limit load calculations where the uninspected regions are assumed through-wall also show safety factor greater than 2.77. Since all of the remaining material in this approach is at end-of-cycle 9 ID fluence less than $3x10^{20}$ n/cm^2, no LEFM evaluation is required.

Alternate LEFM calculations for a configuration in which the regions with ID fluence greater than $5x10^{20}$ n/cm^2 were assumed cracked through-wall, showed a safety factor of 3.05, which is greater than the required value of 2.77 and thus acceptable. The EPFM calculations for the same configuration showed an increase in the safety factor value to 4.0.

Based on the preceding results it is concluded that the H4 weld configuration at the end of cycle 9 meets all the structural margin requirements. This provides technical justification for postponing the reinspection of H4 weld to RF09.

Table 6-1 Summary of Limit Load Margins for Several Cases

Cases	Crack Depth Assumption		CGR (in/hr) in Depth Direction		Limit Load Margin
	Inspected Region	Uninspected Region	Cycle 8	Cycle 9	
Nominal (As described in Section 6.2)	Max of all measured	Max of all measured	2.2×10^{-5}	1.1×10^{-5}	4.98
1	As measured	Thru-wall	2.2×10^{-5}	2.2×10^{-5}	3.25
2	Max of all measured	Max of all measured	2.2×10^{-5}	2.2×10^{-5}	3.42
3	As measured	Thru-wall	2.2×10^{-5}	1.1×10^{-5}	4.27
4	Max of all measured	Thru-wall	2.2×10^{-5}	1.1×10^{-5}	3.53

Figure 6-1 DLL Run output for the Nominal Limit Load Case

DLL: DISTRIBUTED LIGAMENT LENGTH EVALUATION, REV. 2.1 (09/19/96)
DATE OF THIS ANALYSIS: 08/16/2001

SUMMARY OF INPUTS:
==========

Title: H4 RFO7to RFO9 Case 6b DLL
Angle increment = 1.0 deg. (COARSE)
Membrane Stress, Pm = 328. psi
Bending Stress, Pb = 1190. psi
Safety Factor, SF = 2.77
Mean Radius, Rm = 102.56 inches
Wall Thickness, t = 2.000 inches
Stress Intensity, Sm = 14400. psi
Fluence = 0.0E+00 n/cm^2
(Thus, LEFM evaluation not applicable)

REGION	THETA1 [deg.]	THETA2 [deg.]	THICKNESS [inches]
1	.0	12.0	.580
2	43.0	47.0	.580
3	78.0	85.9	.580
4	85.9	91.7	2.000
5	91.7	102.0	.580
6	133.0	137.0	.580
7	168.0	172.8	.580
8	172.8	175.0	2.000
9	175.0	182.6	.580
10	182.6	190.5	2.000
11	190.5	192.0	.580
12	223.0	227.0	.580
13	258.0	282.0	.580
14	313.0	317.0	.580
15	348.0	360.0	.580

LIMIT LOAD RESULTS:
==========

NOTE: THE FOLLOWING LIMIT LOAD RESULTS ASSUME THAT THE FLAWS TAKE COMPRESSION.

ALPHA [deg]	MOMENT [in-lbs]	Pb' [psi]	SAFETY FACTOR	RESULT
.0	6.009E+08	9092.	6.21	---->ACCEPTABLE
5.0	5.853E+08	8856.	6.05	---->ACCEPTABLE
10.0	5.517E+08	8348.	5.72	---->ACCEPTABLE
15.0	5.664E+08	8571.	5.86	---->ACCEPTABLE
20.0	5.264E+08	7964.	5.46	---->ACCEPTABLE
25.0	5.348E+08	8092.	5.55	---->ACCEPTABLE
30.0	5.192E+08	7856.	5.39	---->ACCEPTABLE
35.0	5.347E+08	8090.	5.55	---->ACCEPTABLE
40.0	5.298E+08	8017.	5.50	---->ACCEPTABLE
45.0	5.258E+08	7955.	5.46	---->ACCEPTABLE
50.0	5.226E+08	7907.	5.42	---->ACCEPTABLE
55.0	5.202E+08	7871.	5.40	---->ACCEPTABLE
60.0	4.933E+08	7464.	5.13	---->ACCEPTABLE
65.0	4.784E+08	7238.	4.98	---->ACCEPTABLE
70.0	5.197E+08	7864.	5.40	---->ACCEPTABLE
75.0	5.106E+08	7725.	5.31	---->ACCEPTABLE
80.0	5.000E+08	7566.	5.20	---->ACCEPTABLE
85.0	5.365E+08	8118.	5.56	---->ACCEPTABLE
90.0	5.363E+08	8114.	5.56	---->ACCEPTABLE
95.0	5.284E+08	7995.	5.48	---->ACCEPTABLE
100.0	5.141E+08	7779.	5.34	---->ACCEPTABLE
105.0	5.329E+08	8063.	5.53	---->ACCEPTABLE
110.0	5.409E+08	8185.	5.61	---->ACCEPTABLE
115.0	5.631E+08	8519.	5.83	---->ACCEPTABLE
120.0	5.596E+08	8467.	5.79	---->ACCEPTABLE
125.0	5.913E+08	8946.	6.11	---->ACCEPTABLE
130.0	6.022E+08	9111.	6.22	---->ACCEPTABLE
135.0	6.133E+08	9280.	6.33	---->ACCEPTABLE
140.0	6.247E+08	9452.	6.44	---->ACCEPTABLE
145.0	6.361E+08	9625.	6.56	---->ACCEPTABLE
150.0	6.221E+08	9413.	6.42	---->ACCEPTABLE
155.0	6.470E+08	9790.	6.67	---->ACCEPTABLE
160.0	6.727E+08	10179.	6.92	---->ACCEPTABLE
165.0	6.729E+08	10182.	6.92	---->ACCEPTABLE
170.0	6.728E+08	10180.	6.92	---->ACCEPTABLE
175.0	7.069E+08	10696.	7.26	---->ACCEPTABLE
180.0	7.181E+08	10865.	7.37	---->ACCEPTABLE
185.0	7.279E+08	11014.	7.47	---->ACCEPTABLE
190.0	7.191E+08	10881.	7.38	---->ACCEPTABLE
195.0	7.398E+08	11194.	7.59	---->ACCEPTABLE
200.0	7.596E+08	11494.	7.79	---->ACCEPTABLE

205.0	7.491E+08	11334.	7.68	---->ACCEPTABLE
210.0	7.472E+08	11305.	7.66	---->ACCEPTABLE
215.0	7.746E+08	11720.	7.94	---->ACCEPTABLE
220.0	7.799E+08	11800.	7.99	---->ACCEPTABLE
225.0	7.841E+08	11864.	8.03	---->ACCEPTABLE
230.0	7.871E+08	11910.	8.06	---->ACCEPTABLE
235.0	7.891E+08	11939.	8.08	---->ACCEPTABLE
240.0	7.644E+08	11565.	7.83	---->ACCEPTABLE
245.0	7.775E+08	11765.	7.97	---->ACCEPTABLE
250.0	7.905E+08	11961.	8.10	---->ACCEPTABLE
255.0	7.770E+08	11757.	7.96	---->ACCEPTABLE
260.0	7.625E+08	11537.	7.82	---->ACCEPTABLE
265.0	7.814E+08	11823.	8.00	---->ACCEPTABLE
270.0	7.769E+08	11755.	7.96	---->ACCEPTABLE
275.0	7.706E+08	11660.	7.90	---->ACCEPTABLE
280.0	7.453E+08	11278.	7.65	---->ACCEPTABLE
285.0	7.493E+08	11338.	7.69	---->ACCEPTABLE
290.0	7.525E+08	11385.	7.72	---->ACCEPTABLE
295.0	7.252E+08	10973.	7.44	---->ACCEPTABLE
300.0	7.068E+08	10694.	7.26	---->ACCEPTABLE
305.0	7.180E+08	10864.	7.37	---->ACCEPTABLE
310.0	7.075E+08	10706.	7.27	---->ACCEPTABLE
315.0	6.965E+08	10539.	7.16	---->ACCEPTABLE
320.0	6.850E+08	10365.	7.04	---->ACCEPTABLE
325.0	6.732E+08	10186.	6.93	---->ACCEPTABLE
330.0	6.356E+08	9617.	6.55	---->ACCEPTABLE
335.0	6.368E+08	9636.	6.56	---->ACCEPTABLE
340.0	6.370E+08	9638.	6.57	---->ACCEPTABLE
345.0	6.123E+08	9265.	6.32	---->ACCEPTABLE
350.0	6.249E+08	9456.	6.45	---->ACCEPTABLE
355.0	6.023E+08	9114.	6.22	---->ACCEPTABLE

ACCEPTABLE! MINIMUM SAFETY FACTOR = 4.98 AT 65.0 DEGREES.

Figure 6-2 DLL Run output for the LEFM Case

DLL: DISTRIBUTED LIGAMENT LENGTH EVALUATION, REV. 2.1 (09/19/96)
DATE OF THIS ANALYSIS: 08/16/2001

SUMMARY OF INPUTS:
==========

Title: H4 RFO7to RFO9 LEFM DLL WITH t=0.58 IN.

Angle increment	=	1.0 deg. (COARSE)
Membrane Stress, Pm	=	863. psi
Bending Stress, Pb	=	3130. psi
Safety Factor, SF	=	2.77
Mean Radius, Rm	=	102.56 inches
Wall Thickness, t	=	2.000 inches
Stress Intensity, Sm	=	14400. psi
Fluence	=	5.0E+20 n/cm^2
Toughness, Kic	=	150.0 ksi*in^0.5

REGION	THETA1 [deg.]	THETA2 [deg.]	THICKNESS [inches]
1	.0	17.0	2.000
2	39.0	51.0	2.000
3	73.0	107.0	2.000
4	129.0	141.0	2.000
5	163.0	197.0	2.000
6	219.0	231.0	2.000
7	253.0	287.0	2.000
8	309.0	321.0	2.000
9	343.0	360.0	2.000

LIMIT LOAD RESULTS:
==========

NOTE: THE FOLLOWING LIMIT LOAD RESULTS ASSUME THAT THE FLAWS TAKE COMPRESSION.

ALPHA [deg]	MOMENT [in-lbs]	Pb' [psi]	SAFETY FACTOR	RESULT
.0	2.350E+09	35555.	9.12	---->ACCEPTABLE
5.0	2.347E+09	35509.	9.11	---->ACCEPTABLE
10.0	2.346E+09	35500.	9.11	---->ACCEPTABLE
15.0	2.336E+09	35342.	9.07	---->ACCEPTABLE

20.0	2.331E+09	35264.	9.05	---->ACCEPTABLE
25.0	2.330E+09	35253.	9.04	---->ACCEPTABLE
30.0	2.319E+09	35089.	9.00	---->ACCEPTABLE
35.0	2.305E+09	34881.	8.95	---->ACCEPTABLE
40.0	2.299E+09	34780.	8.93	---->ACCEPTABLE
45.0	2.296E+09	34742.	8.92	---->ACCEPTABLE
50.0	2.299E+09	34780.	8.93	---->ACCEPTABLE
55.0	2.314E+09	35017.	8.99	---->ACCEPTABLE
60.0	2.328E+09	35218.	9.04	---->ACCEPTABLE
65.0	2.314E+09	35006.	8.98	---->ACCEPTABLE
70.0	2.331E+09	35264.	9.05	---->ACCEPTABLE
75.0	2.336E+09	35342.	9.07	---->ACCEPTABLE
80.0	2.338E+09	35378.	9.08	---->ACCEPTABLE
85.0	2.347E+09	35509.	9.11	---->ACCEPTABLE
90.0	2.350E+09	35555.	9.12	---->ACCEPTABLE
95.0	2.347E+09	35509.	9.11	---->ACCEPTABLE
100.0	2.346E+09	35500.	9.11	---->ACCEPTABLE
105.0	2.336E+09	35342.	9.07	---->ACCEPTABLE
110.0	2.331E+09	35264.	9.05	---->ACCEPTABLE
115.0	2.330E+09	35253.	9.04	---->ACCEPTABLE
120.0	2.319E+09	35089.	9.00	---->ACCEPTABLE
125.0	2.305E+09	34881.	8.95	---->ACCEPTABLE
130.0	2.299E+09	34780.	8.93	---->ACCEPTABLE
135.0	2.296E+09	34742.	8.92	---->ACCEPTABLE
140.0	2.299E+09	34780.	8.93	---->ACCEPTABLE
145.0	2.314E+09	35017.	8.99	---->ACCEPTABLE
150.0	2.328E+09	35218.	9.04	---->ACCEPTABLE
155.0	2.314E+09	35006.	8.98	---->ACCEPTABLE
160.0	2.331E+09	35264.	9.05	---->ACCEPTABLE
165.0	2.336E+09	35342.	9.07	---->ACCEPTABLE
170.0	2.338E+09	35378.	9.08	---->ACCEPTABLE
175.0	2.347E+09	35509.	9.11	---->ACCEPTABLE
180.0	2.350E+09	35555.	9.12	---->ACCEPTABLE
185.0	2.347E+09	35509.	9.11	---->ACCEPTABLE
190.0	2.346E+09	35500.	9.11	---->ACCEPTABLE
195.0	2.336E+09	35342.	9.07	---->ACCEPTABLE
200.0	2.331E+09	35264.	9.05	---->ACCEPTABLE
205.0	2.330E+09	35253.	9.04	---->ACCEPTABLE
210.0	2.319E+09	35089.	9.00	---->ACCEPTABLE
215.0	2.305E+09	34881.	8.95	---->ACCEPTABLE
220.0	2.299E+09	34780.	8.93	---->ACCEPTABLE
225.0	2.296E+09	34742.	8.92	---->ACCEPTABLE
230.0	2.299E+09	34780.	8.93	---->ACCEPTABLE
235.0	2.314E+09	35017.	8.99	---->ACCEPTABLE
240.0	2.328E+09	35218.	9.04	---->ACCEPTABLE

245.0	2.314E+09	35006.	8.98	---->ACCEPTABLE
250.0	2.331E+09	35264.	9.05	---->ACCEPTABLE
255.0	2.336E+09	35342.	9.07	---->ACCEPTABLE
260.0	2.338E+09	35378.	9.08	---->ACCEPTABLE
265.0	2.347E+09	35509.	9.11	---->ACCEPTABLE
270.0	2.350E+09	35555.	9.12	---->ACCEPTABLE
275.0	2.347E+09	35509.	9.11	---->ACCEPTABLE
280.0	2.346E+09	35500.	9.11	---->ACCEPTABLE
285.0	2.336E+09	35342.	9.07	---->ACCEPTABLE
290.0	2.331E+09	35264.	9.05	---->ACCEPTABLE
295.0	2.330E+09	35253.	9.04	---->ACCEPTABLE
300.0	2.319E+09	35089.	9.00	---->ACCEPTABLE
305.0	2.305E+09	34881.	8.95	---->ACCEPTABLE
310.0	2.299E+09	34780.	8.93	---->ACCEPTABLE
315.0	2.296E+09	34742.	8.92	---->ACCEPTABLE
320.0	2.299E+09	34780.	8.93	---->ACCEPTABLE
325.0	2.314E+09	35017.	8.99	---->ACCEPTABLE
330.0	2.328E+09	35218.	9.04	---->ACCEPTABLE
335.0	2.314E+09	35006.	8.98	---->ACCEPTABLE
340.0	2.331E+09	35264.	9.05	---->ACCEPTABLE
345.0	2.336E+09	35342.	9.07	---->ACCEPTABLE
350.0	2.338E+09	35378.	9.08	---->ACCEPTABLE
355.0	2.347E+09	35509.	9.11	---->ACCEPTABLE

ACCEPTABLE! MINIMUM SAFETY FACTOR = 8.92 AT 225.0 DEGREES.

LEFM RESULTS:

==========

NOTE: THE FOLLOWING LEFM EVALUATION TREATS PART-THROUGH WALL FLAWS AS THROUGH-WALL.

Thus, the following flaws were assumed:

FLAW No.	START (deg)	END (deg)	LENGTH (deg.)	LENGTH (inch)	DEPTH (inch)
1	17.0	39.0	22.0	39.38	2.00
2	51.0	73.0	22.0	39.38	2.00
3	107.0	129.0	22.0	39.38	2.00
4	141.0	163.0	22.0	39.38	2.00
5	197.0	219.0	22.0	39.38	2.00
6	231.0	253.0	22.0	39.38	2.00
7	287.0	309.0	22.0	39.38	2.00
8	321.0	343.0	22.0	39.38	2.00

Allowable Stress Intensity Factor, Kic/SF = 54.2 ksi*inch^0.5

	SPACING W (in.)	Lmax (inch)	K (ksi,in)	RESULT
For space between flaws 1 & 2:	60.86	39.38	49.2	---->ACCEPTABLE
For space between flaws 2 & 3:	100.24	39.38	41.9	---->ACCEPTABLE
For space between flaws 3 & 4:	60.86	39.38	49.2	---->ACCEPTABLE
For space between flaws 4 & 5:	100.24	39.38	41.9	---->ACCEPTABLE
For space between flaws 5 & 6:	60.86	39.38	49.2	---->ACCEPTABLE
For space between flaws 6 & 7:	100.24	39.38	41.9	---->ACCEPTABLE
For space between flaws 7 & 8:	60.86	39.38	49.2	---->ACCEPTABLE
For space between flaws 8 & 1:	100.24	39.38	41.9	---->ACCEPTABLE

LIMITING K = 49.2*ksi*in^0.5, ACCEPTABLE

Figure 6-3 EPFM Margin Evaluation Process

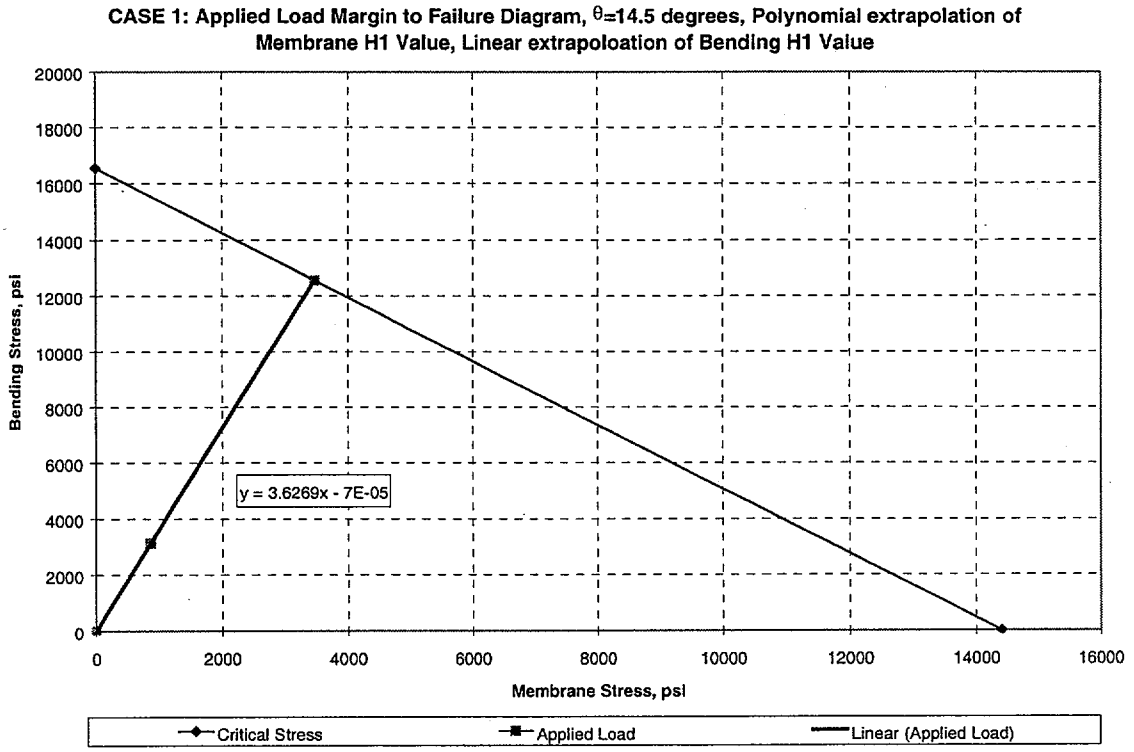

7. CONSERVATISMS IN EVALUATION

There were several conservative assumptions used in the limit load, LEFM and EPFM structural margin evaluations evaluation and are discussed below:

- In the nominal case, initial crack depth everywhere in the inspected region was assumed to be equal to the maximum found value.
- The fluence distribution used in the analysis included an increase of 2σ over the nominal value to conservatively account for uncertainty.
- Based on the review of plant cycle history, Cycle 7 exposure was ~545 EFPD (which was the maximum achieved since Power Uprate). Fluence projection for cycle 8 and cycle 9 was based on 1.82 EFPY (664.3 EFPD). Therefore, approximately 18 percent conservatism in the nominal fluence values exists based on the historical plant information.
- In selecting the azimuth values where the fluence exceeded $5x10^{20}$ n/cm^2 or $3x10^{20}$ n/cm^2, no credit was taken for through-wall attenuation.
- K dependent crack growth rate calculations, permitted by the NRC, showed a better than a factor of two conservatism in the calculated crack growth used in the analysis.
- The material J-T curve for a fluence level of $5x10^{20}$ n/cm^2 used in the EPFM evaluation, is lower than (i.e., conservative) the experimentally determined curve given in BWRVIP-01 at a fluence level of $8x10^{20}$ n/cm^2.
- The assumed crack depth in the uninspected regions for cycle 9 is conservative compared to the allowed use of average crack depth in the inspected region by the NRC's final SER on BWRVIP-63.

8. SUMMARY AND CONCLUSIONS

The H4 shroud weld at NMP2 was inspected during refueling outages in 1998 (RF06) and 2000 (RF07). A structural margin evaluation considering RF07 inspection results for the H4 weld, provided technical justification for continued operation to at least the end of cycle 8. Noble metal chemical application (NMCA or NobleChem™) at NMP2 took place in September 2000. Hydrogen injection was started in January 2001. Although these intergranular stress corrosion cracking (IGSCC) mitigation measures were implemented during cycle 8, conservatively a factor of two improvement in the assumed crack growth rate has been applied for cycle 9 only. The objective of this report is to describe the structural evaluation methodology used and document the results of evaluation in support of continued operation of H4 weld to RF09.

Structural margins for continued operation of H4 weld to the end of cycle 9 were evaluated two ways. First, the limit load calculations were conducted for a configuration in which through-wall flaws were assumed in regions where the ID surface fluence at the end of cycle 9 exceeded $3x10^{20}$ n/cm^2. Since all of the areas taken credit for had a fluence less than the threshold value of $3x10^{20}$ n/cm^2, a limit load evaluation constituted a complete structural margin evaluation and no LEFM or EPFM evaluations were necessary. Secondly, LEFM and EPFM calculations were conducted for the assumed configuration in which through-wall cracking was assumed where the ID surface fluence exceeded $5x10^{20}$ n/cm^2.

For the limit load structural margin calculation, the following assumptions were used to develop a nominal case in which no LEFM or EPFM evaluation was required:

- The initial crack depth in all of the regions that were found cracked was assumed to be equal to the maximum found value of 0.78 inch.
- The crack growth rate for cycle 8 was assumed to be $2.2x10^{-5}$ in/hr and the rate for cycle 9 was assumed to be $1.1x10^{-5}$ in/hr. The cycle 9 rate reflected a factor of two improvement based on HWC and NMCA.
- The initial crack depth in the uninspected regions was assumed to be equal to the maximum found value of 0.78 inch.
- Regions where the ID surface fluence was greater than $3x10^{20}$ n/cm^2 were assumed through-wall.

The calculated safety factor for the nominal case was determined to be 4.98, which exceeds the required value of 2.77. The safety factor for some of the more limiting assumptions, such as assuming through-wall flaws in the uninspected regions, were also calculated and were shown to be in excess of the required value of 2.77.

To demonstrate structural margin in the LEFM regime, a configuration similar to the limit load nominal case was used except that through-wall cracking was assumed in regions where ID fluence exceeded $5x10^{20}$ n/cm^2 instead of $3x10^{20}$ n/cm^2. The calculated value of the highest stress intensity factor was 49.2 ksi√in that is less than the allowable value of 54.2 ksi√in, which is based a safety factor of 2.77. The calculated safety factor was 3.05.

Additional evaluation with EPFM was also conducted to demonstrate higher available structural margins. The EPFM evaluation was conducted by first determining an equivalent single through-wall flaw to conservatively model the LEFM configuration. The applied J-integral values were calculated using the EPRI ductile fracture handbook. A conservative material J-T curve corresponding to a fluence level of $5x10^{20}$ n/cm^2 was used in the evaluation. The EPFM evaluation showed the structural margin for this case to be 4.0, which exceeds the required value of 2.77.

Based on results of these limit load, LEFM and EPFM structural margin evaluations, it is concluded that the required structural margins will be maintained at the NMP2 shroud H4 weld for operation through the end of cycle 9.

ATTACHMENT D

AFFIDAVIT

General Electric Company

AFFIDAVIT

I, David J. Robare, being duly sworn, depose and state as follows:

(1) I am Technical Projects Manager, General Electric Company ("GE") and have been delegated the function of reviewing the information described in paragraph (2) which is sought to be withheld, and have been authorized to apply for its withholding.

(2) The information sought to be withheld is contained in the GE proprietary report GE-NE-B13-02123-00, Section 1, Rev 0, *H4 Shroud Weld Evaluation to Justify Continued Operation of Nine Mile Point Unit 2 Through RF09*, Class III (GE Nuclear Energy Proprietary Information), dated August 2001. The proprietary information is delineated by bars marked in the margin adjacent to the specific material.

(3) In making this application for withholding of proprietary information of which it is the owner, GE relies upon the exemption from disclosure set forth in the Freedom of Information Act ("FOIA"), 5 USC Sec. 552(b)(4), and the Trade Secrets Act, 18 USC Sec. 1905, and NRC regulations 10 CFR 9.17(a)(4), 2.790(a)(4), and 2.790(d)(1) for "trade secrets and commercial or financial information obtained from a person and privileged or confidential" (Exemption 4). The material for which exemption from disclosure is here sought is all "confidential commercial information", and some portions also qualify under the narrower definition of "trade secret", within the meanings assigned to those terms for purposes of FOIA Exemption 4 in, respectively, Critical Mass Energy Project v. Nuclear Regulatory Commission, 975F2d871 (DC Cir. 1992), and Public Citizen Health Research Group v. FDA, 704F2d1280 (DC Cir. 1983).

(4) Some examples of categories of information which fit into the definition of proprietary information are:

a. Information that discloses a process, method, or apparatus, including supporting data and analyses, where prevention of its use by General Electric's competitors without license from General Electric constitutes a competitive economic advantage over other companies;

b. Information which, if used by a competitor, would reduce his expenditure of resources or improve his competitive position in the design, manufacture, shipment, installation, assurance of quality, or licensing of a similar product;

c. Information which reveals cost or price information, production capacities, budget levels, or commercial strategies of General Electric, its customers, or its suppliers;

d. Information which reveals aspects of past, present, or future General Electric customer-funded development plans and programs, of potential commercial value to General Electric;

e. Information which discloses patentable subject matter for which it may be desirable to obtain patent protection.

The information sought to be withheld is considered to be proprietary for the reasons set forth in both paragraphs (4)a. and (4)b., above.

(5) The information sought to be withheld is being submitted to NRC in confidence. The information is of a sort customarily held in confidence by GE, and is in fact so held. The information sought to be withheld has, to the best of my knowledge and belief, consistently been held in confidence by GE, no public disclosure has been made, and it is not available in public sources. All disclosures to third parties including any required transmittals to NRC, have been made, or must be made, pursuant to regulatory provisions or proprietary agreements which provide for maintenance of the information in confidence. Its initial designation as proprietary information, and the subsequent steps taken to prevent its unauthorized disclosure, are as set forth in paragraphs (6) and (7) following.

(6) Initial approval of proprietary treatment of a document is made by the manager of the originating component, the person most likely to be acquainted with the value and sensitivity of the information in relation to industry knowledge. Access to such documents within GE is limited on a "need to know" basis.

(7) The procedure for approval of external release of such a document typically requires review by the staff manager, project manager, principal scientist or other equivalent authority, by the manager of the cognizant marketing function (or his delegate), and by the Legal Operation, for technical content, competitive effect, and determination of the accuracy of the proprietary designation. Disclosures outside GE are limited to regulatory bodies, customers, and potential customers, and their agents, suppliers, and licensees, and others with a legitimate need for the information, and then only in accordance with appropriate regulatory provisions or proprietary agreements.

(8) The information identified in paragraph (2), above, is classified as proprietary because it contains detailed results of analytical models, methods and processes, including computer codes, which GE has developed and applied to perform flaw evaluations for the BWR.

The development of fluence estimation methodology that are used to evaluate BWRs was achieved at a significant cost, on the order of one million dollars, to GE.

The development of the evaluation process contained in the paragraph (2) document along with the interpretation and application of the analytical results is derived from the extensive experience database that constitutes a major GE asset.

(9) Public disclosure of the information sought to be withheld is likely to cause substantial harm to GE's competitive position and foreclose or reduce the availability of profit-making opportunities. The information is part of GE's comprehensive BWR safety and technology base, and its commercial value extends beyond the original development cost. The value of the technology base goes beyond the extensive physical database and analytical methodology and includes development of the expertise to determine and apply the appropriate evaluation process. In addition, the technology base includes the value derived from providing analyses done with NRC-approved methods.

The research, development, engineering, analytical and NRC review costs comprise a substantial investment of time and money by GE.

The precise value of the expertise to devise an evaluation process and apply the correct analytical methodology is difficult to quantify, but it clearly is substantial.

GE's competitive advantage will be lost if its competitors are able to use the results of the GE experience to normalize or verify their own process or if they are able to claim an equivalent understanding by demonstrating that they can arrive at the same or similar conclusions.

The value of this information to GE would be lost if the information were disclosed to the public. Making such information available to competitors without their having been required to undertake a similar expenditure of resources would unfairly provide competitors with a windfall, and deprive GE of the opportunity to exercise its competitive advantage to seek an adequate return on its large investment in developing these very valuable analytical tools.

STATE OF CALIFORNIA)
) ss:
COUNTY OF SANTA CLARA)

David J. Robare, being duly sworn, deposes and says:

That he has read the foregoing affidavit and the matters stated therein are true and correct to the best of his knowledge, information, and belief.

Executed at San Jose, California, this 22ND day of AUGUST 2001.

David J. Robare
General Electric Company

Subscribed and sworn before me this 22nd day of August 2001.

TERRY J. MORGAN
Commission # 1304914
Notary Public - California
Santa Clara County
My Comm. Expires May 18, 2005

Notary Public, State of California