I/

2379

West Virginia University | MEDICAL CENTER
MORGANTOWN, WEST VIRGINIA 26506

School of Medicine
Department of Radiology
Division of Medical Physics and Radiation Safety
Telephone: 304-293-3413

1979 AUG 20 AM 11 23
RECEIVED
U.S. NUCLEAR REG COMMISSION
MAIL SECTION

August 15, 1979

Nathan Bassin
License Management Branch
Division of Fuel Cycle and Material Safety
U.S. Nuclear Regulatory Commission
Washington, D.C. 20555

Dear Mr. Bassin,

Enclosed are revisions in our application for the renewal of License number 47-01163-24 (Mail control 99344) originally submitted 30 March 1979. Our apologies for the delay, but your failure to return our telephone calls made progress more tortuous. This revision supersedes, and in part duplicates all of our previous application except for Appendix A, the curricula vitae.

We trust that our proposal to submit radiation profiles and reports of safety checks within thirty days of approval as is done with cobalt teletherapy licenses will be satisfactory, and that our application will receive prompt consideration.

This envelope contains one copy of the revision. The other has been forwarded under separate cover.

Sincerely,

Stephen T. Slack

Stephen T. Slack, Ph.D.
Radiation Safety Officer

Ray Koppelman

Ray Koppelman, Ph.D.
Vice President for Energy Studies,
Graduate Programs and Research

1P

STS/net
enclosure

COPIES SENT TO OFF. OF
INSPECTION AND ENFORCEMENT

FORM NRC-313 I (1-79) 10 CFR 30

U.S. NUCLEAR REGULATORY COMMISSION

APPLICATION FOR BYPRODUCT MATERIAL LICENSE
INDUSTRIAL

1. APPLICATION FOR: 2379
(Check and/or complete as appropriate)

	a. NEW LICENSE
	b. AMENDMENT TO: LICENSE NUMBER
X	c. RENEWAL OF: LICENSE NUMBER 47-01163-24

See attached instructions for details.

Completed applications are filed in duplicate with the Division of Fuel Cycle and Material Safety, Office of Nuclear Material Safety, and Safeguards, U.S. Nuclear Regulatory Commission, Washington, DC 20555 or applications may be filed in person at the Commission's office at 1717 H Street, NW, Washington, D. C. or 7915 Eastern Avenue, Silver Spring, Maryland.

2. APPLICANT'S NAME *(Institution, firm, person, etc.)*
West Virginia University
TELEPHONE NUMBER: AREA CODE – NUMBER EXTENSION

3. NAME OF PERSON TO BE CONTACTED REGARDING THIS APPLICATION
Stephen T. Slack
TELEPHONE NUMBER: AREA CODE – NUMBER EXTENSION
(304) 293-3413

4. APPLICANT'S MAILING ADDRESS *(Include Zip Code)*
West Virginia University
Morgantown, West Virginia 26506

5. STREET ADDRESS WHERE LICENSED MATERIAL WILL BE USED *(Include Zip Code)*
Chemistry Research Lab
West Virginia University
Morgantown, West Virginia 26506

(IF MORE SPACE IS NEEDED FOR ANY ITEM, USE ADDITIONAL PROPERLY KEYED PAGES.)

6. INDIVIDUAL(S) WHO WILL USE OR DIRECTLY SUPERVISE THE USE OF LICENSED MATERIAL
(See Items 16 and 17 for required training and experience of each individual named below)

	FULL NAME	TITLE
a.	Nar S. Dalal	Assistant Prof., Dept. of Chemistry
b.		
c.		

7. RADIATION PROTECTION OFFICER
Stephen T. Slack

Attach a resume of person's training and experience as outlined in Items 16 and 17 and describe his responsibilities under Item 15.

8. LICENSED MATERIAL

LINE NO.	ELEMENT AND MASS NUMBER A	CHEMICAL AND/OR PHYSICAL FORM B	NAME OF MANUFACTURER AND MODEL NUMBER *(If Sealed Source)* C	MAXIMUM NUMBER OF MILLICURIES AND/OR SEALED SOURCES AND MAXIMUM ACTIVITY PER SOURCE WHICH WILL BE POSSESSED AT ANY ONE TIME D
(1)	Cobalt-60	sealed source	custom built	1000 Curies
(2)			irradiator	
(3)				
(4)				

	DESCRIBE USE OF LICENSED MATERIAL E
(1)	The source will be used in a custom built irradiator to produce chemical and
(2)	physical changes in samples, such as production of free radicals, which will
(3)	then be studied in various university laboratories.
(4)	7906120515 47 pp.

FORM NRC-313 I (1-79)

15 August 1979

9. STORAGE OF SEALED SOURCES

LINE NO.	CONTAINER AND/OR DEVICE IN WHICH EACH SEALED SOURCE WILL BE STORED OR USED. A.	NAME OF MANUFACTURER B.	MODEL NUMBER C.
(1)	Not applicable. The source is not		
(2)	moveable.		
(3)			
(4)			

10. RADIATION DETECTION INSTRUMENTS

LINE NO.	TYPE OF INSTRUMENT A	MANUFACTURER'S NAME B	MODEL NUMBER C	NUMBER AVAILABLE D	RADIATION DETECTED *(alpha, beta, gamma, neutron)* E	SENSITIVITY RANGE *(milliroentgens/hour or counts/minute)* F
(1)	List attached					
(2)						
(3)						
(4)						

11. CALIBRATION OF INSTRUMENTS LISTED IN ITEM 10

☐ a. **CALIBRATED BY SERVICE COMPANY**

NAME, ADDRESS, AND FREQUENCY

☒ b. **CALIBRATED BY APPLICANT**

Attach a separate sheet describing method, frequency and standards used for calibrating instruments.

Procedure attached

12. PERSONNEL MONITORING DEVICES

TYPE *(Check and/or complete as appropriate.)* A	SUPPLIER *(Service Company)* B	EXCHANGE FREQUENCY C
☒ (1) FILM BADGE ☐ (2) THERMOLUMINESCENCE DOSIMETER *(TLD)* ☐ (3) OTHER *(Specify)*: _____	R.S. Landauer, Jr. & Co. Glenwood Science Park Glenwood, Illinois 60425	☒ MONTHLY ☐ QUARTERLY ☐ OTHER *(Specify)*: _____

13. FACILITIES AND EQUIPMENT (Check were appropriate and attach annotated sketch(es) and description(s).

☐ a. LABORATORY FACILITIES, PLANT FACILITIES, FUME HOODS *(Include filtration, if any)*, ETC.
☒ b. STORAGE FACILITIES, CONTAINERS, SPECIAL SHIELDING *(fixed and/or temporary)*, ETC.
☒ c. REMOTE HANDLING TOOLS OR EQUIPMENT, ETC.
☐ d. RESPIRATORY PROTECTIVE EQUIPMENT, ETC.

14. WASTE DISPOSAL

a. NAME OF COMMERCIAL WASTE DISPOSAL SERVICE EMPLOYED

RAD Services, Inc.

b. IF COMMERCIAL WASTE DISPOSAL SERVICE IS NOT EMPLOYED, SUBMIT A DETAILED DESCRIPTION OF METHODS WHICH WILL BE USED FOR DISPOSING OF RADIOACTIVE WASTES AND ESTIMATES OF THE TYPE AND AMOUNT OF ACTIVITY INVOLVED. IF THE APPLICATION IS FOR SEALED SOURCES AND DEVICES AND THEY WILL BE RETURNED TO THE MANUFACTURER, SO STATE.

INFORMATION REQUIRED FOR ITEMS 15, 16 AND 17

Describe in detail the information required for Items 15, 16 and 17. Begin each item on a separate page and key to the application as follows:

15. RADIATION PROTECTION PROGRAM. Describe the radiation protection program as appropriate for the material to be used including the duties and responsibilities of the Radiation Protection Officer, control measures, bioassay procedures *(if needed)*, day-to-day general safety instruction to be followed, etc. If the application is for sealed source's also submit leak testing procedures, or if leak testing will be performed using a leak test kit, specify manufacturer and model number of the leak test kit.

16. FORMAL TRAINING IN RADIATION SAFETY. Attach a resume for each individual named in Items 6 and 7. Describe individual's formal training in the following areas where applicable. Include the name of person or institution providing the training, duration of training, when training was received, etc.

    a. Principles and practices of radiation protection.

    b. Radioactivity measurement standardization and monitoring techniques and instruments.

    c. Mathematics and calculations basic to the use and measurement of radioactivity.

    d. Biological effects of radiation.

17. EXPERIENCE. Attach a resume for each individual named in Items 6 and 7. Describe individual's work experience with radiation, including where experience was obtained. Work experience or on-the-job training should be commensurate with the proposed use. Include list of radioisotopes and maximum activity of each used.

18. CERTIFICATE

(This item must be completed by applicant)

The applicant and any official executing this certificate on behalf of the applicant named in Item 2, certify that this application is prepared in conformity with Title 10, Code of Federal Regulations, Part 30, and that all information contained herein, including any supplements attached hereto, is true and correct to the best of our knowledge and belief.

WARNING.–18 U.S.C., Section 1001; Act of June 25, 1948; 62 Stat. 749; makes it a criminal offense to make a willfully false statement or representation to any department or agency of the United States as to any matter within its jurisdiction.

a. LICENSE FEE REQUIRED *(See Section 170.31, 10 CFR 170)* exempt	b. CERTIFYING OFFICIAL *(Signature)* Ray Koppelman
	c. NAME *(Type or print)* Ray Koppelman
(1) LICENSE FEE CATEGORY: exempt	d. TITLE V.P., En Std, Gr Prg & Rsch
(2) LICENSE FEE ENCLOSED: $ 0.00	e. DATE 15 August 1979

FORM NRC-313 I (1-79)

Item 10. Radiation Detection Instruments

A list of the equipment available for activity, exposure and dose monitoring in the Chemistry Research Laboratory is attached as page 10.1 of this application.

1. Survey Meters

a. Manufacturer's name: Baird Atomic

Manufacturer's model number: Model 420E

Number of Instruments available: 1

Minimum range: 0 mr/hr to 1.0 mr/hr

Maximum range: 0 mr/hr to 10 mr/hr

b. Manufacturer's name: Victoreen

Manufacturer's model number: Model 740-F

Number of Instruments available: 1

Minimum range: 0 mr/hr to 25 mr/hr

Maximum range: 0 mr/hr to 25,000 mr/hr

c. Manufacturer's name: Nuclear Chicago

Manufacturer's model number: Model 2592

Number of Instruments available: 1

Minimum range: 0 mr/hr to .3 mr/hr

Maximum range: 0 mr/hr to 100 mr/hr

2. Other Instrumentation

# of Instruments	Manufacturer	Model No.
1 Proportional Counter	Nuclear Measurements Corp	PC4
1 Nuclear Spectrometer	Nuclear Measurements Corp	NS7
1 Paper Reader	Nuclear Chicago	C
1 Air Monitor	Unico Environmental Instr.	550
2 Liquid Scintillation Counters	Picker	Ansition II
1 Liquid Scintillation Counters	Nuclear Chicago	720
1 Area Monitor	Nuclear Associates	

Item 11. Calibration of Radiation Detection Instruments

Procedures for calibrating survey meters throughout West Virginia University are attached as pages 11.1 - 11.2 of this application.

Calibration of Survey Instruments

Every gamma survey instrument is calibrated quarterly using a 5.6 millicurie ^{60}Co source* manufactured by Tech/Ops, of Birmingham, Massachussetts (Model No. 57 Serial No. 135, 15 mCi on 6/22/71). This source is locked and kept in a locked room when not in use.

A. The following procedure is used to calibrate gamma survey instruments

1. Check the batteries. Replace them if they are weak.
2. Place the survey meter in a location such that the center of the gamma ray beam will impinge on the geometrical center of the sensitive volume of the chamber or tube. The orientation which maximizes the measured exposure or exposure rate at any particular distance. Both the source and the meter should be used remote from significant scattering media.
3. After having ascertained that no personnel are located so as to be in the beam, move the source to the "ON" position.
4. Allow adequate time for the needle on the meter to stabilize, then record the reading and the source to probe distance at which it was obtained.
5. Repeat this at different distances until at least three measurements have been made for each scale. At lease one measurement should be made in each half of each scale. Two of the points on each scale should be separated by 35-50% of full scale.
6. The exposure rate measured by the instrument shall differ from the true exposure rate by less than 10% of full scale (read appropriate section of the instrument manual to determine how to make necessary adjustments to bring instrument into calibration). Readings within ± 20% will be considered acceptable if a calibration chart or graph is prepared and attached to the instrument.
7. Plot the data and provide a copy to the people who use the meter. File a copy of the data and the graph.

B. A reference check source of long half-life, e.g., Cs-137 or Ra D and E, shall also be read at the time of the above calibration. The reading shall be taken with the check source placed in specific geometry relative to the detector. A reading of this reference check source should be taken:

1. Before each use and also after each survey to ensure that the instrument was operational during this survey.
2. After each maintenance and/or battery change.

If any reading with the same geometry is not within 20% of the reading measured immediately after calibration, the instrument should be recalibrated (see item A).

C. The instrument must be calibrated at lower energies if its response is energy dependent and it is to be used to measure in the Xe-133 or Tc-99m energy ranges.

This calibration may be done either

1. As in item A above with calibrated standards of radionuclides at or near the desired energies or
2. As a relative intercomparison with an energy-independent instrument and uncalibrated radionuclides.

D. Records of the above items A, B-2, B-3, and C must be maintained.

E. The inverse square law and the radioactive decay law will be used to determine the true exposure rate at the distances and dates of meter calibration.

* This source activity is traceable within 5% accuracy to the U.S. National Bureau of Standards calibrations.

After rennovation of an appropriate room is completed, West Virginia University will seek license to use a Cesium-137 Irradiator for the calibration of meters. (J.L. Shepherd and Associates, Model 78-2M, Serial 578, with 130 Ci of ^{137}Cs and 1.3 Ci of ^{137}Cs.) The activity of this source is also traceable within 5% accuracy to the U.S. National Bureau of Standards calibrations.

13. Facilities and Equipment

a. Engineering drawings. Since the irradiator was custom built more than five years ago, not all of the information specified in The "Draft Regulatory Guide and Value/Impact (sic) Statement: Guide for Preparation of Applications for the Use of Gamma Irradiators" is still available. Photographs of the irradiator are found on page 13.1. Scale drawings of the device are on pages 13.2 - 13.7

The shield consists of steel-jacketed lead blocks of 9" thick lead and 1/4" steel jackets (overall thickness is thus 9 1/2"). The source is a standard medical teletherapy unit, attached via a source module to a carrying rod, and the carrying rod attached to an operating rod.

The shield provides a minimum of 9" lead plus 1/2" steel in all directions as protections to workers in restricted areas; and a minimum of 9" lead, 1/2" steel, 8" brick, and 6 feet air, to persons in unrestricted areas, for the source in its operating position. The source in its storage position is protected by a minimum of 10" lead, and 3/4" steel, to restricted area; and a similar amount of shielding plus brick and air as was detailed above for unrestricted areas.

The shield design is entirely mechanical, using no electrical connections or operating motors, no compressed air or fluid operating devices. The interlocking system to prevent unsafe operation of the shield is also purely mechanical.

b. Mechanical and electrical systems. A description of the mechanical systems is found on p. 13.8. The operation of the entire unit is purely mechanical, with no electrical controls or devices. Because the source is attached to a solid rod, the operator can always determine its location, and act accordingly.

c. Because the irradiator is being held under a "possession only" license, we are unable to provide the radiation profile specified in the draft regulatory guide. We propose instead to follow the practice of teletherapy licensing, and submit this data within thirty days of receiving approval to use the device, and therefore legally take the data. Calculations have been made of dose levels

at various locations in the vicinity of the irradiator. These are attached as pages 13.9 - 13.19 of this application.

d. It is proposed that tests to establish the integrity of the irradiator shielding and operability of the control system be performed after authorization to use the unit has been granted, and submitted within thirty days of receipt of this authorization.

e. Standard radiation warning labels are attached to the irradiator in locations clearly visible in the first photograph on p. 13.1. A copy of the label may be found on p. 13.20.

f. The irradiator location and surroundings are described in the section dealing with calculations of exposure rates, pages 13.12 - 13.19.

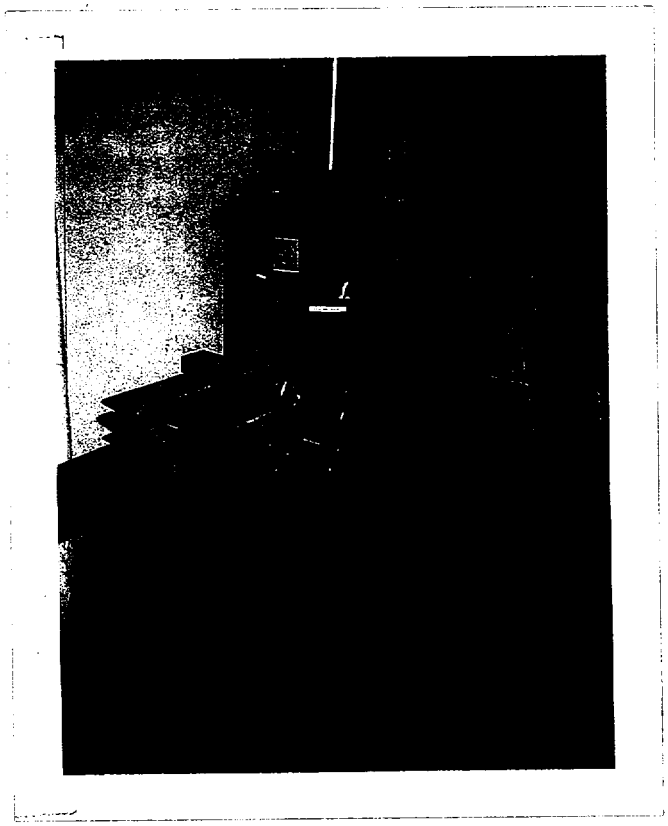

Photograph 1. The cobalt irradiator, viewed from the doorway. In the foreground is the irriation chamber door moving mechanism. The cylindrical housing is the source storage turrett. Below it is the irradiation chamber; above it is the extension of the source carrying rod.

Photograph 2. Source storage turret viewed from the front, and a height of approximately 10 feet. Mechanical interlock is visible on either side.

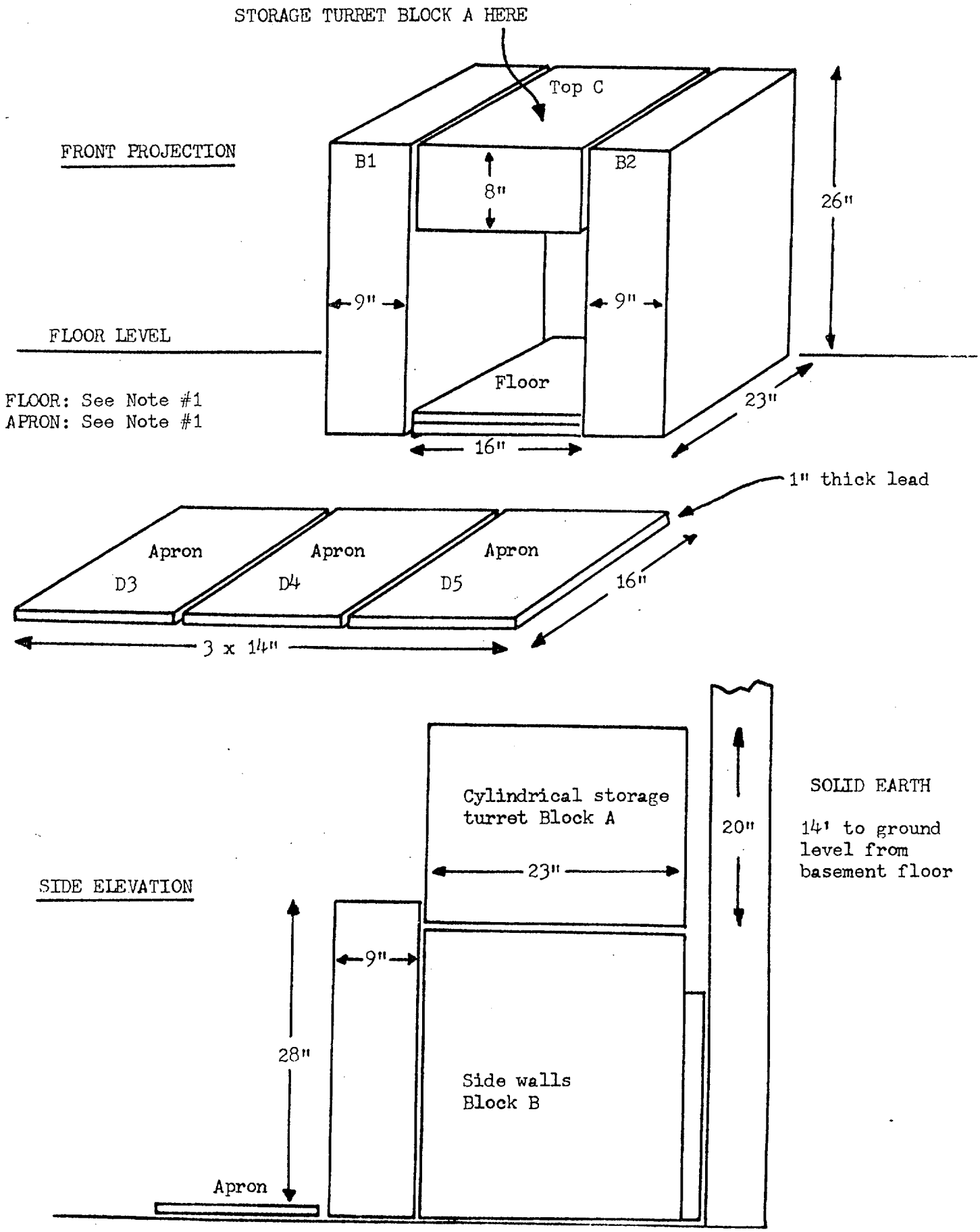

CONCRETE FLOOR TO BASEMENT ON FOUNDATIONS

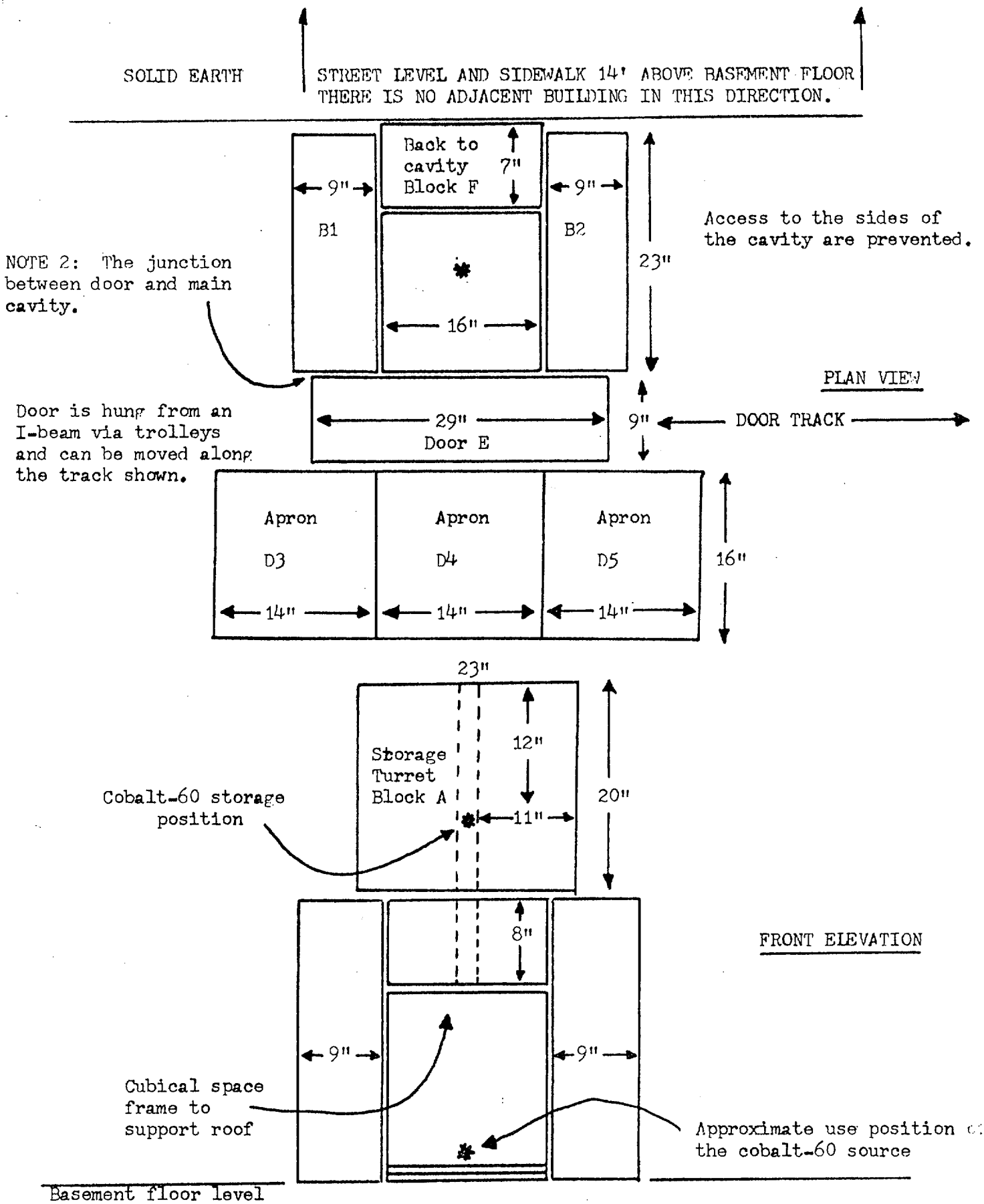
SOLID EARTH
STREET LEVEL AND SIDEWALK 14' ABOVE BASEMENT FLOOR
THERE IS NO ADJACENT BUILDING IN THIS DIRECTION.
Back to cavity Block F
7"
9"
9"
B1
B2
23"
16"
Access to the sides of the cavity are prevented.
NOTE 2: The junction between door and main cavity.
PLAN VIEW
Door is hung from an I-beam via trolleys and can be moved along the track shown.
29"
Door E
9"
DOOR TRACK
Apron D3
Apron D4
Apron D5
14"
14"
14"
16"
23"
Storage Turret Block A
12"
20"
Cobalt-60 storage position
11"
8"
FRONT ELEVATION
9"
9"
Cubical space frame to support roof
Approximate use position of the cobalt-60 source
Basement floor level

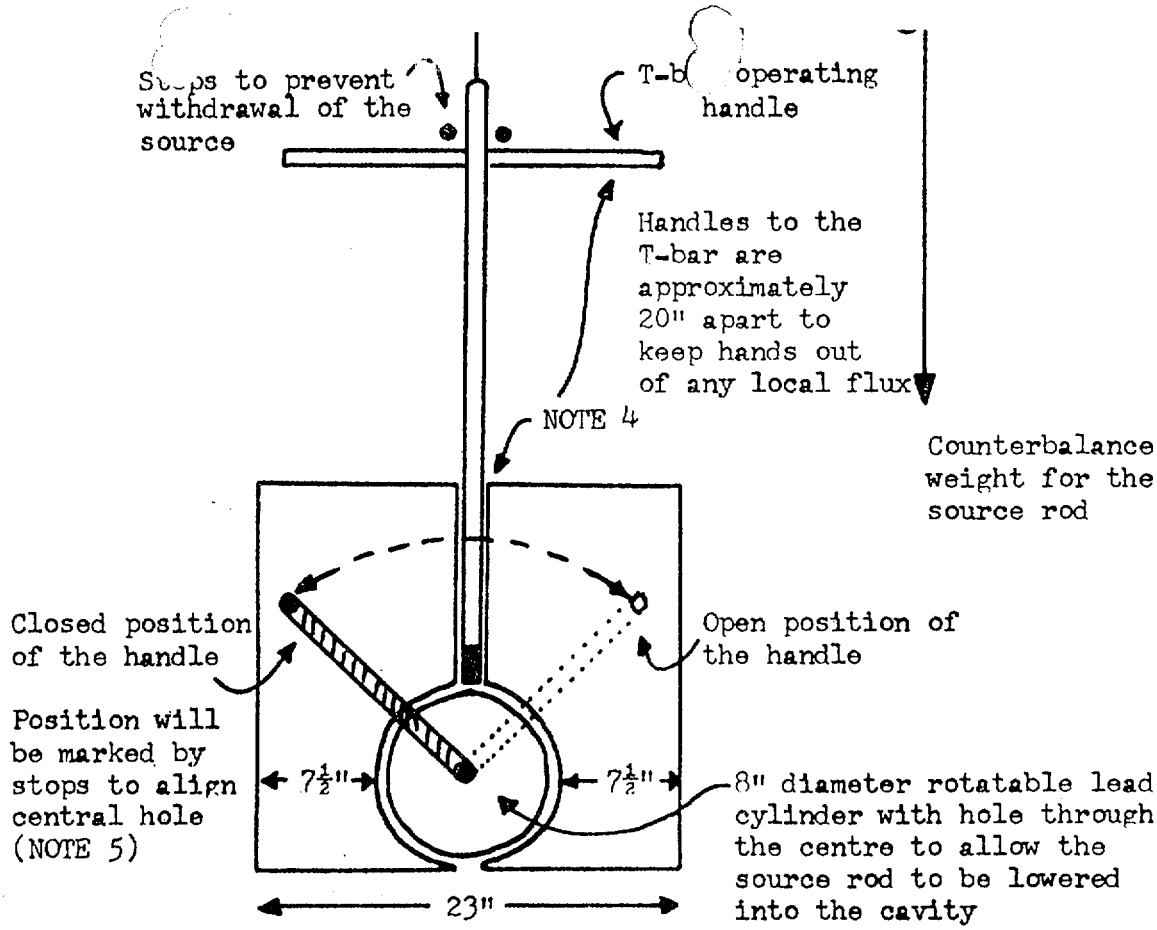

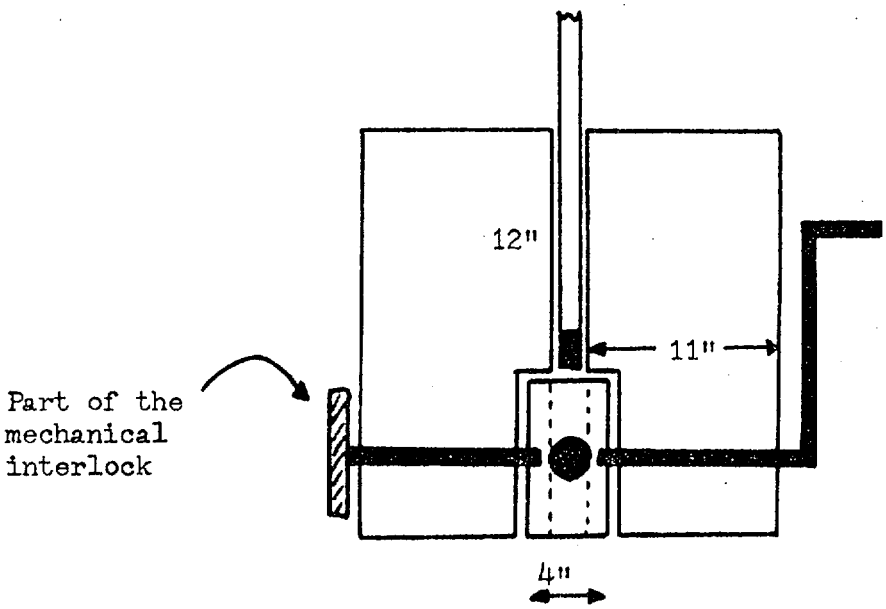

CYLINDRICAL STORAGE TURRET----BLOCK A

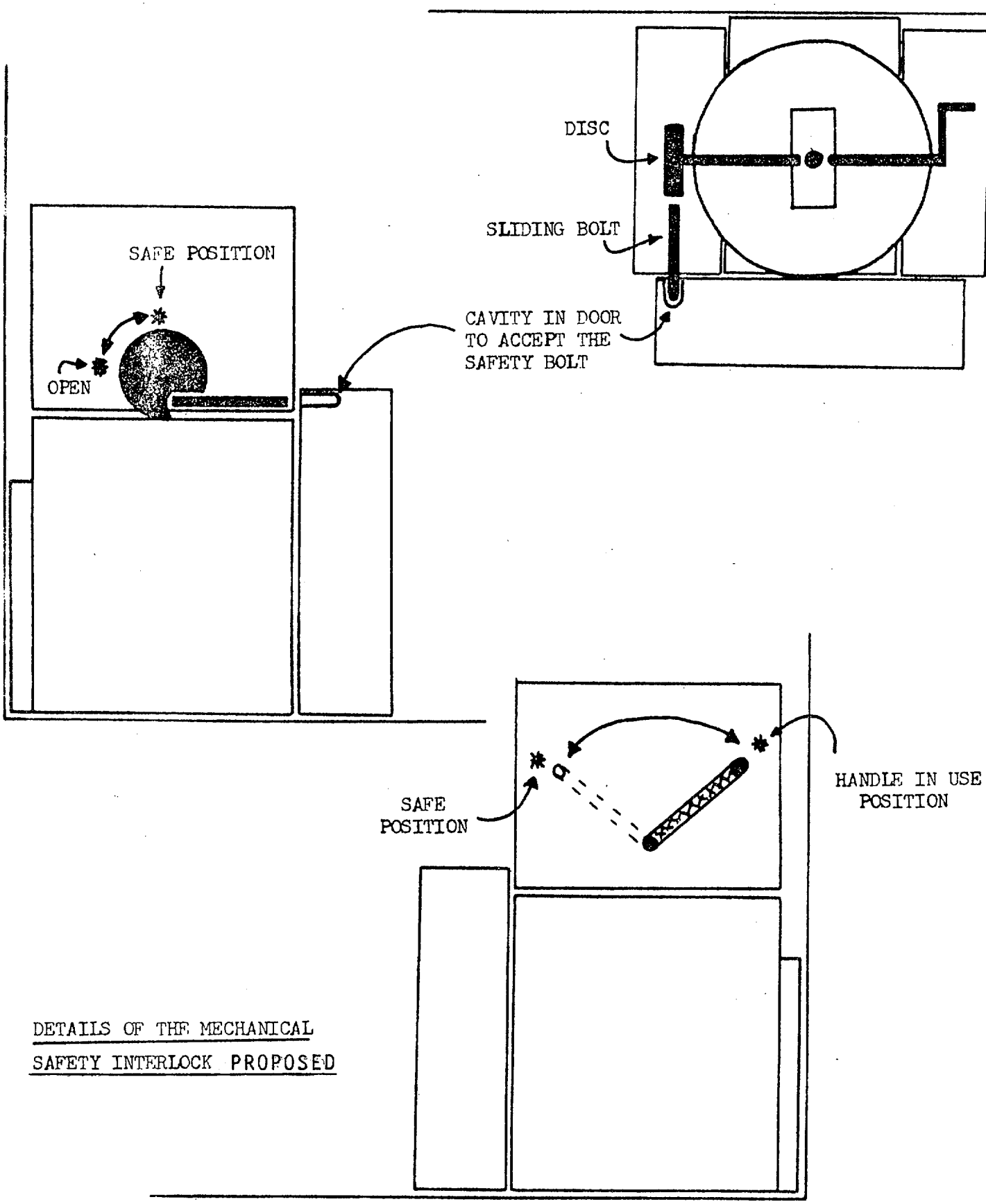

DETAILS OF THE MECHANICAL
SAFETY INTERLOCK PROPOSED

6' long opera g rod

Operating rod is made from stainless steel (1" diam.)

Rivet hole, countersunk to allow smooth sliding fit of the operating rod in the guide tub.

OPERATING ROD

Rivet to prevent unscrewing of the carrying rod

1"

Machined flat sections to allow carrying rod to be gripped when attaching to the operating rod.

10"

CARRYING ROD

Rivet to prevent unscrewing

1"

Source module machined from solid stainless steel rod

1"

SOURCE MODULE

Standard teletherapy cobalt source

1"

Square section end to attach source module to the carrying rod and tighten the screw thread SEE NOTE 6

$\frac{1}{2}$"

$\frac{1}{2}$"

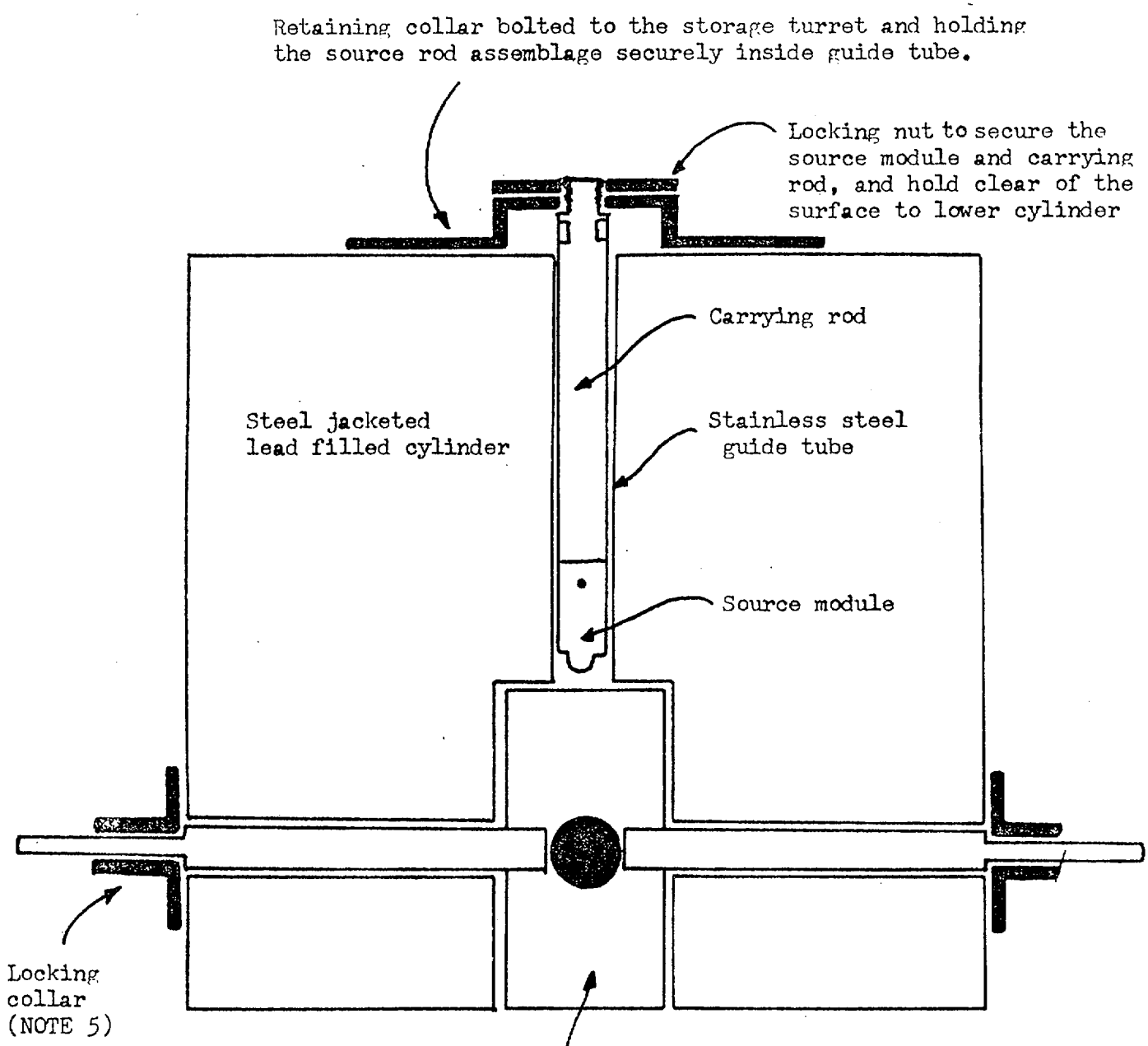

All bolts attaching locking nut, retaining collars, etc. can be wire tagged to show interference.

STORAGE TURRET AND SHIPPING CONTAINER---BLOCK A

OPERATION AND MECHANICAL SAFETY INTERLOCK SYSTEM

Operation of the facility consists of sliding the door back to the open position, placing sample in the cavity provided to the required position, closing the door until an interlock mechanism is aligned correctly, sliding the safety locking bar into the tube embedded in door thus allowing the central cylinder of the storage turret to be rotated into the active position (hole vertical), and so allowing the operating rod carrying the source to be pulled down into the sample cavity. When the irradiation is completed, the operating rod may be withdrawn from the sample cavity, pulled up until the Cobalt-60 module is now at the center of the storage turret, and only then can the center cylinder be rotated to the safe position (hole horizontal), and only when the center cylinder is in the safe position can the slide bar be withdrawn from the door, and the door now slide open.

The mechanical safety interlock system operates so as to prevent the central inner cylinder to the storage turret being rotated unless the slide bar is moved to the operate position. Equally the slide bar cannot be slid into the operate position unless the door is closed. Further, with the slide bar in the operate position, the door cannot be moved at all from its closed position. The inner rotatable cylinder to the storage turret controls the access hole to the sample cavity, if the cylinder is not rotated so that the hole through this cylinder is co-linear with the source operating rod, the operating rod cannot be pulled down into the sample cavity. The hole in its co-linear position, hole vertical, can only be achieved if the door is shut with the slide bar moved to the operate position; and the slide bar interlocks with the door preventing any possible movement of the door. The safe position for the inner cylinder, access hole horizontal, can only be achieved if the source operating rod is withdrawn from the sample cavity to its storage positions at the center of the storage turret.

Details of the mechanical interlock are seen in the diagrams of pages 13.4 - 13.5

ESTIMATED EXPOSURE RATES GENERATED BY SHIELD

a. See accompanying sketch plan of layout for Location Numbers.
b. Permitted levels of irradiation (NCRP Report Number 33, Appendix B, Table I)
   100 mR per 40 hour work week (controlled areas)
   10 mR per 40 hour work week (uncontrolled areas)
c. Seeing succeeding sheets for calculation numbers.

Site Number	Exposure Rate (mR/hr)	Comments	Calculation Number	Total maximum exposure per normal week (mR)
1	0.19	Negligible hazard	1	10^{-3}
2	1.0		2	1.0
3	0.01	No access to this location	3	----
4	6.0	Dose to feet and ankles. Falls off rapidly with angular dispersion.	4	2.5
5	10^{-8}	Exposure in next building	5	10^{-8}
6	10^{-6}	Street level outside	5	10^{-7}
7	10^{-4}	Staircase to basement	6	10^{-6}
8	10^{-3}	Glass-blowing bench 25 hour work week (variable)	7	$10^{-2} - 10^{-1}$
10	10^{-4}	Filling station liquid N_2	8	10^{-4}
11	.02	Entrance door to source room	9	---
12	0.1	Inside source room, no one person will spend more than 5 hours per week in this room	10	5×10^{-1}
13	0.001	Uncontrolled, but very limited access	11	10^{-4}
14	0.002	At elevator entrance	12	10^{-3}

Time dependent accumulated exposure doses will be monitored by film badge, ALL personnel who enter Room B.3, the source room, will be wearing a standard health-physics radiation film-badge at all times.

4. DOSIMETRY CALCULATIONS FOR THE IRRADIATOR

Calculations have been carried out in conjuction with:

Dr. C.D. Thomas, Professor of Physics, WVU
Dr. W.R. Boyle, Professor of Nuclear Engineering, WVU
Dr. G.L. Blackshaw, Professor of Nuclear Engineering, WVU
Dr. A.C. Ling, Associate Professor of Chemistry, WVU
Mr. M.D. Allan, Radiation Safety Technician, WVU

A nominal activity of 1,000 Ci is assumed, although the actual source is now 361 Ci.

The following data was taken from "Reactor Shielding Design Manual" edited by Theodore Rockwell, published by D. Van Nostrand and Co. Inc., New York, 1956.

1 mR/hr corresponds to 3.2×10^2 2 MeV photons. $Sec.^{-1}$ cm^{-2} (page 20)

Build-up factors (B) for different thicknesses of lead shielding for 2 MeV photons:

7"	(14 relexation lengths)	B=6.5
8"	(16 relexation lengths)	B=7.2
9"	(18 relexation lengths)	B=8.0
10"	(20 relexation lengths)	B=9.0
12"	(24 relexation lengths)	B=12.0

Taken from Figure 10.1 Page 430.

$$\text{Dose rate in mR/hr} = D = \frac{S.B.\ \exp(-kx)}{4\pi r.^2 K}$$

Where S = source strength in photons sec^{-1} at 2 MeV per photon

B = build-up factor (a function of shield thickness)

k = attenuation factor (cm^{-1})

x = shield thickness (cm)

r = distance from exposure site to source

K = 3.2×10^2 photons sec^{-1} cm^2 mR/hr.

Attenuation constant (k) corresponds to 0.79769 cm^{-1} for lead to 2 MeV photons, this excludes build-up factors. A practical half-value layer (HVL) thickness that includes this factor is 1.19 cm of head.

HVL value for concrete is taken as 6.38 cm.
HVL value for brick-work is taken to be 12.7 cm.

("Engineering Compendium on Radiation Shielding," 1, 205).

CALCULATION NUMBER 1: STORAGE TURRET TOP SURFACE

With the Cobalt-60 source in its stored position:

Lead thickness interposed = 12" = 30.48 cm = 25.61 HVL.

$$D = \frac{(10^3 Ci)\ (3.7 \times 10^{10}\ \frac{\text{photons sec}^{-1}}{Ci})\ (12.0)e^{(-0.79769)(30.48)}}{(4)(3.142)(30.48\ cm)^2 \cdot (\frac{3.2 \times 10^2\ \text{photons} \cdot \text{sec}^{-1}cm^{-2}}{mR/hr})}$$

$$D = \frac{(3.7)(1.2)(10^{-10}.5592)(10^{14})}{(4)(3.142)(3.048)^2(3.2)(10^4)}\ mR/hr = \underline{0.043\ mR/hr}$$

An alternate calculation using simple inverse square law factors leads to the following data:

Exposure rate from source 1,000 rhm unshielded in air.

Lead shield corresponds to 25.61 HVL.

$$D = \frac{(10^3\ R/hr)}{2^{25.61}} \cdot \frac{10^3 mR}{1R} \cdot \frac{(1\ meter)^2}{(30.48\ cm)^2} \cdot \frac{(100\ cm)^2}{(1\ meter)^2} = 0.21\ mR/hr$$

Correlation between these two figures is obtained if a HVL-thickness for lead shielding is taken as 1.13 cm of lead and not the practical value of 1.19 used above.

Operation of the source does not ordinarily require touching the top of the storage turret, except momentarily. The distance of closest approach by the operators hands represents the handles of the T-bar operating bar, these are approximately four feet above the cylinder surface.

2: STORAGE TURRET SIDE SURFACE

Cobalt source in stored position, distance to surface 11.5"=29.21 cm.

Lead thickness interposed = 11" = 27.94 cm = 23.48 HVL.

Build-up factor = 9.8.

$$D = \frac{(10^3)(3.7 \times 10^{10})(9.8)\, e^{(-0.79769)(27.94)}}{(4)(3.142)(29.21)^2(3.2 \times 10^2)} \text{ mR/hr}$$

$$D = \frac{(3.7)(9.8)(10^{13})(10^{-9.6793})}{(4)(3.142)(2.921)^2(3.2)} \times 10^9 \text{ mR/hr} = \underline{0.51 \text{ mR/hr}}$$

An alternate calculation can be set up as follows (see calculation number 1)

$$D = \frac{(10^3 \text{rhm})(100)^2(10^3)}{(2^{23.48})(29.21)^2} \text{ mR/hr} = \underline{1.01 \text{ mR/hr}}$$

$$\text{Exposure rate} = \frac{(103)(100)^2}{(2^{17.04})(74)^2} \text{ R/hr}$$

Exposure rate = 0.014 R/hr = 12 mR/hr at floor level to basement room (approximately 14' of solid earth between this reference point and street level).

(c) EXPOSURE RATE AT NEAREST REQUENTED POINT (40' AWAY)

Shielding interposed: 7" lead + 10.5" brick + 40'earth = 37 HVL, allowing 25 cm as one HVL in earth. Distance away is approximately 1250 cm. Exposure rate estimated is less than 10^{-8}mR/hr.

(d) EXPOSURE RATE AT STREET LEVEL TO REAR OF SOURCE

Source is at a level approximately 14' vertically beneath street level. The nearest uncontrolled area is the walkway outside the building, at a point 10' from the wall of the building, and 14' above source, i.e., greater than 17' from source. Shielding interposed consists of an angular path through the 7" lead backplate, together with a path through the 8" thick lead top. Total lead interposed will exceed 8".

Shielding interposed: 8" lead + 12" brick + 15' earth = 37 HVL.

Estimated exposure dose rate at street level is less than 10^{-6} mR/hr.

DOSIMETRY CALCULATIONS FOR ENVIRONS OF SOURCE

6. STAIRCASE DOWN INTO BASEMENT (UNCONTROLLED AREA)

A value for the landing on the staircase is calculated, approximately 7' above basement floor, and approximately 5' from side wall of shield.

Distance from source is greater than 260 cm.

Exposure rate on side of source:

(a)	Stored position	= 1.01 mR/hr
(b)	Use position	= 8.86 mR/hr (no bricks)
(c)	Use position	= 0.013 mR/hr (bricks used)

Source in stored position (90% occupancy for this position) leads to an exposure dose on staircase of less than 5×10^{-3} mR/hr.

Source in use position (10% occupancy) leads to an exposure dose on the staircase of less than 5×10^{-2}mR/hr assuming only 9" of lead interposed. Actually, due to the angular path subtended by a point 7' above the ground, the thickness of lead interposed exceeds this by at least three HVL values, reducing the dose observed to less than 6×10^{-3}mR/hr.

Source in use position and concrete blocks used to prevent access to the sides of the shielded cavity leads to staircase exposure rates of less than 5×10^{-5}mR/hr.

7. GLASS-BLOWING SHOP WORK AREA (UNCONTROLLED AREA)

Glass-blower may spend up to 60% of his time in this one area, corresponding to a 25 hour work week. Exposure rate at this point, greater than 20' away, is reduced by at least two 8" brick walls (greater than 2 HVL).

(a) Stored position leads to exposure rate of less than 5×10^{-4}mR/hr.

(b) Use position (no bricks) yields an exposure rate of less than 4×10^{-3}mR/hr.

(c) Use position (bricks interposed) yields an exposure rate of less than 6×10^{-6}mR/hr.

8. FILLING POINT FOR LIQUID NITROGEN (UNCONTROLLED, BUT LIMITED ACCESS)+

Thickness of lead interposed exceeds 10.5" (approximately 20° angle through door to cavity) when in use, and may include part of the side wall too. Distance to filling station is approximately 15' and involves a diagonal path through two 8" brick walls (greater than 3 HVL). Estimated exposure rate is less than 10^{-4} mR/hr. No one person would use this area for longer than one hour per week.

9. ENTRANCE DOOR INTO SOURCE ROOM (OUTSIDE SURFACE)

The entrance door is a steel fire door (approximately 1/2" of steel), distance from source is greater than 7 feet, and the path involves greater than 13.5" of lead (greater than 29 HVL). Calculated exposure rates arelless than 2 x 10^{-2} mR/hr for the storage position of the cobalt source. These figures do not include attenuation by the door itself.

10. CONTROLLED AREAS IN SOURCE ROOM IN FRONT OF THE DOOR.

Access to the sides of the source are prevented by mechanical means (concrete blocks and constructional materials suspending door). The source room in general will not be used for any purpose other than irradiation, and residence time in the room will be low (less than 5 hours per week at a maximum). Maximum exposure rates will occur when the source is stored. Exposure rates when the source is in use will be at a maximum along the axis perpendicular to the door face directly to the source. At the wall inside the source room, approximately where the 24-hour area alarm monitor will be sited, the dose rate is calculated to be less than 0.7 mR/hr to feet and ankles when the source is in use (falling off rapidly away from the perpendicular), and 0.03 mR/hr or less to the whole body when in the stored position. Elsewhere in the room involves greater distances from the source and lower exposure rates.

11. TRANSFORMER VAULT (UNCONTROLLED, BUT LIMITED ACCESS).

This vault is used (access from manhole cover outside building at street level) very frequently by maintenancy personnel. Maximum exposure rates involves a path interposing greater than 11" lead (stored), or greater than 10" of lead (use position) together with greater than 12" brick (greater than 2 HVL), and approximately 5' distance of separation. Calculated exposure rates are less than 0.04 mR/hr at the nearest corner in the transformer vault. For the source in its stored position, this reduces to less than 10^{-3}mR/hr.

12. MAXIMUM EXPOSURE IN BASEMENT CORRIDOR.

This will occur at a point on axis to the source, involve a path length of approximately 6' and a shielding factor not less than 20 HVL. Calculated exposure rates are less than 0.3 mR/hr at floor level at the wall surface. At the center of the corridor and 15 feet out from the wall (at the elevator door), whole body irradiation will not exceed 4×10^{-3} mR/hr. Contact time for this dose will not exceed 10 minutes per week (waiting for elevator). This is reduced to less than 2×10^{-3}mR/hr for the source in its stored position, and for operators of the source who might await the elevator at the conclusion of an irradiation, the time of exposure would not exceed 30 minutes per week for any one person.

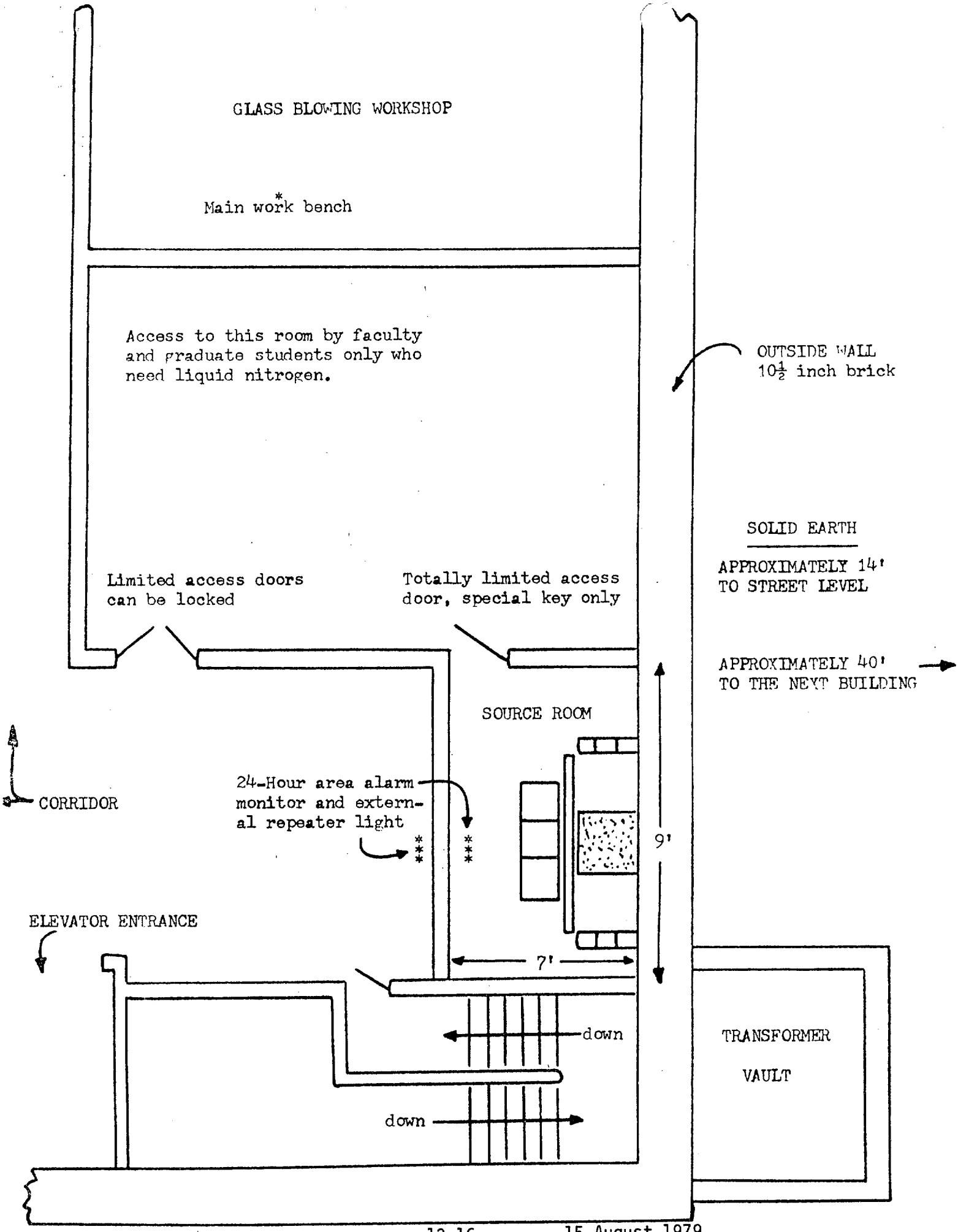
GLASS BLOWING WORKSHOP
Main work bench
Access to this room by faculty and graduate students only who need liquid nitrogen.
OUTSIDE WALL
10½ inch brick
SOLID EARTH
APPROXIMATELY 14'
TO STREET LEVEL
Limited access doors can be locked
Totally limited access door, special key only
APPROXIMATELY 40'
TO THE NEXT BUILDING
SOURCE ROOM
CORRIDOR
24-Hour area alarm monitor and external repeater light
9'
ELEVATOR ENTRANCE
7'
down
TRANSFORMER
VAULT
down

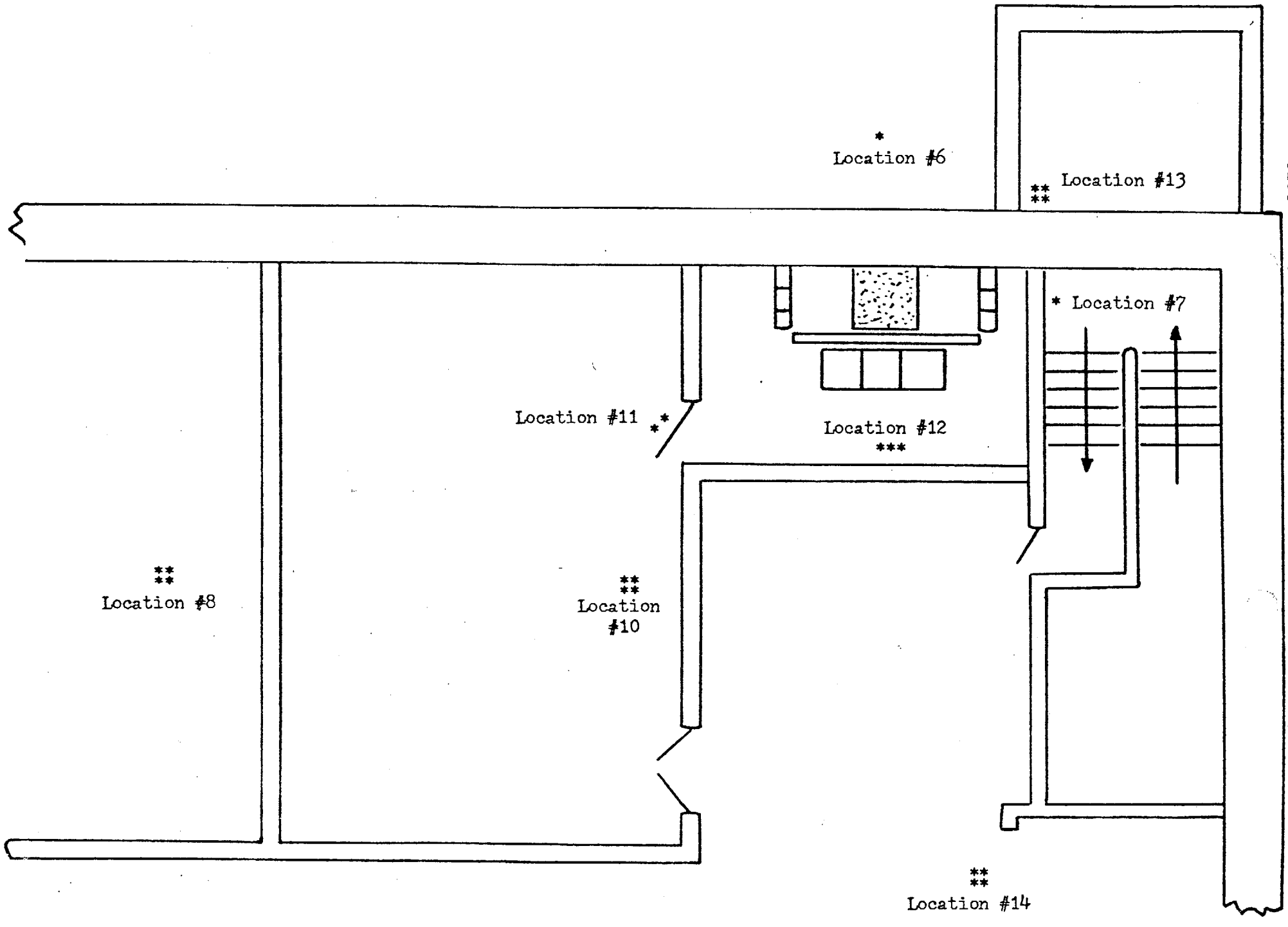

15 August 1979

13.17

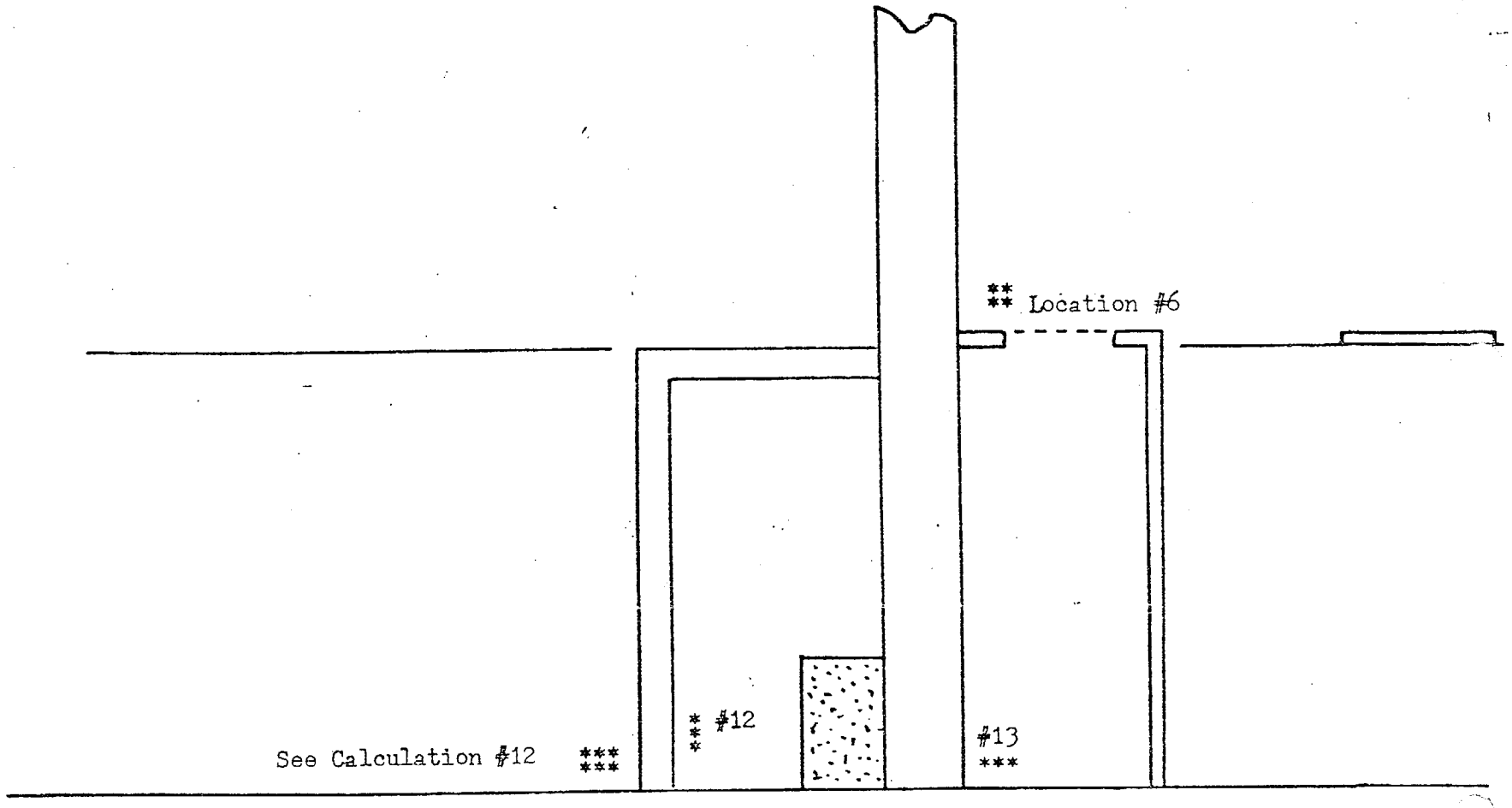

Side elevation of cobalt irradiator room

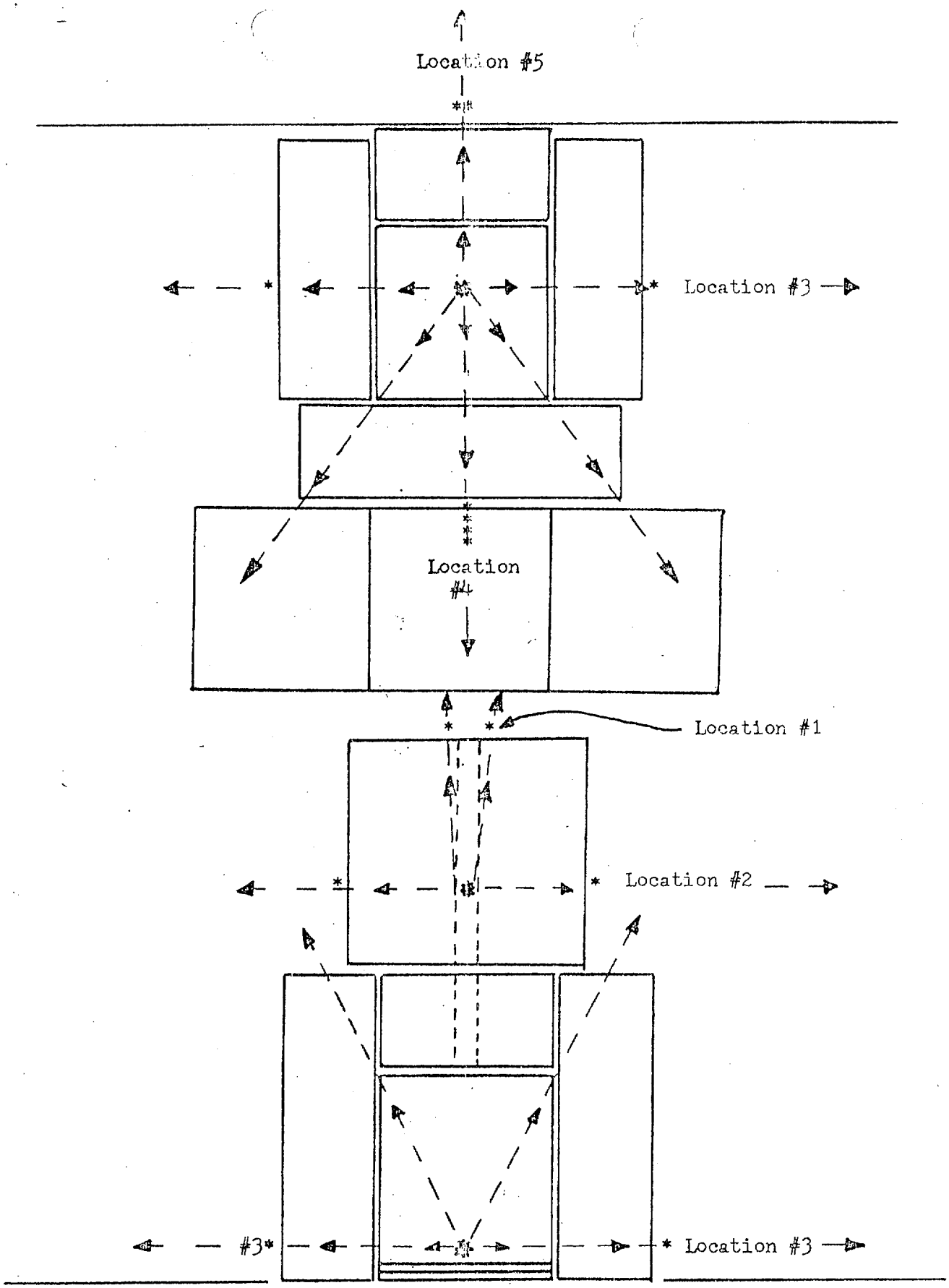

Views from above and in front of irradiator
showing shielding and calculation points

CAUTION

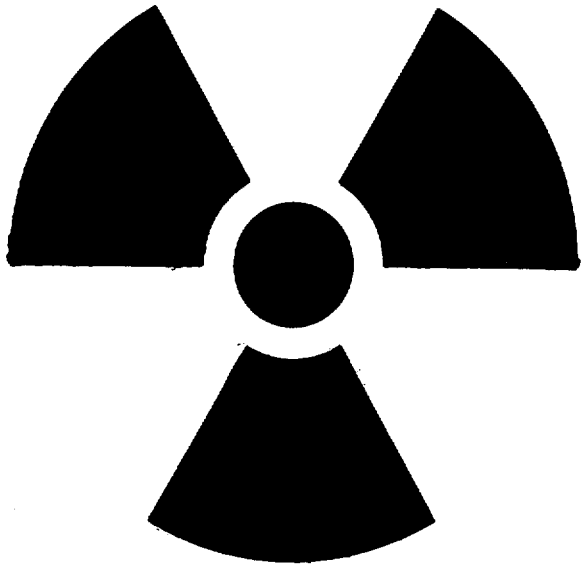

RADIOACTIVE MATERIALS

13.20 15 August 1979

Item 15 Radiation Safety Program

a) The overall structure of the radiation safety program at West Virginia University is described in Section 3 of the Radiation Safety Manual, attached to this application as pages 15.1 - 15.7. The radiation safety officer works with each committee, and although his administrative line of command is to the Chairman of the Department of Radiology, he has direct access to the Vice President for Energy Studies, Graduate Programs and Research, who is chairman of the Radiological Safety Committee. Persons operating the irradiator do so only after instruction by and authorization by the principal investigator, who, in turn, is subject to approval by the appropriate committees. The radiation safety office performs the monitoring necessary to ensure that all parties are provided with sufficient information to have a safe operation.

The door to the irradiator area is separately keyed. The only copies of this key are in the hands of the radiation safety office, the authorized investigator and the chairman of the physics department, who is the member of the Large Source and Reactor Committee nearest the scene. In addition, the source mechanism itself is padlocked. Thus, no unauthorized person has access to the irradiator.

b) Operating procedures are attached as pages 15.8 - 15.9 of this application. No one is to use the irradiator without having been instructed in its use. The principal investigator is to be so instructed by an individual trained by Dr. Alan Campbell Ling, the previous principal investigator before he is permitted to begin operations.

A copy of the posted emergency procedures is attached as pages 15.10 - 15.11 of this application.

c) The portion of the Radiation Safety Manual dealing with leak testing of sealed sources is attached as page 15.12 - 15.13 of this application. Testing is done quarterly, using the same procedures as for a cobalt teletherapy source.

d) The irradiator will be operated either by the approved investigator or by persons under his supervision. These will be trained by him in the operation and safety precautions for the irradiator, and in addition will be required to attend the course in Radiation Safety and Radionuclide Use offered by the university. A syllabus is attached as pages 15.14 - 15.16 of this application.

Section 3 Responsibility of Radiation Committees and of Certain Individuals

The U.S. Nuclear Regulatory Commission has granted West Virginia University a broad license for the use of nuclear byproduct and source materials as well as several specific licenses for used such as cobalt teletherapy, plutonium powered pacemakers, etc. In addition, a number of radionuclides, as well as all x-ray sources are operated under a system of registration with the West Virginia State Department of Health.

The use of sources of ionizing radiation, whether subject to state or federal regulation is administerred by the Radiological Safety Committee and a number of other committees reporting to the Radiological Safety Committee. This is illustrated in figure 3.1

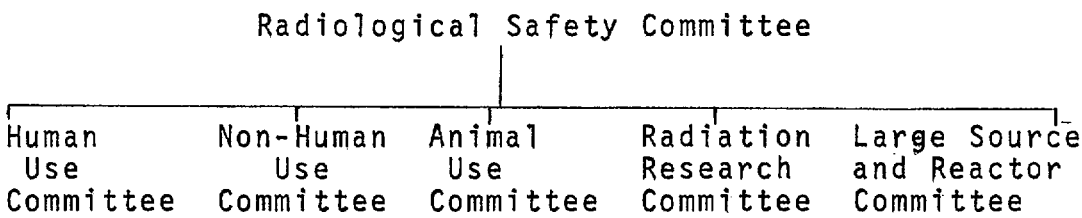

Figure 3.1 Administrative Structure

Members

Members of The Radiological Safety Committee are appointed by the president of the university. Members of the other committees are appointed by The Radiological Safety Committee after nomination by the chairman of the Radiological Safety Committee, the Radiation Safety Officer or the chairman of the individual committee. Unless the appointment is by reason of a person's status, eg. the director of the animal quarters on The Animal Use of Radiation and Radionuclides Committee, it will be for two years, renewable once.

Section 3.1 The Radiological Safety Committee

The Radiological Safety Committee is composed of the Vice President for Health Sciences, the Vice-President for Research and Graduate Studies, the Dean of The College of Medicine, and the Hospital Adminstrator with responsibility for the Radiology Department, the Radiation Safety Officer and the chairman of each of the committees reporting to the Radiological Safety Committee.

The committee meets at least quarterly to:

1. Adopt rules and policies on the use of ionizing radiation within the university.

2. Review plans for all new buildings and modifications of existing structures where ionizing radiation is to be used.

3. Review reports by the Radiation Safety Officer and the chairman of the reporting committees.

4. Approve or modify proposals for amendments to the various licenses or applications for new licenses.

5. Review the operation of the radiation safety office on at least an annual basis to insure that all license obligations and regulations of the U.S. Nuclear Regulatory Commission and the West Virginia State Department of Health are met and that regulations notwithstanding, sources of ionizing radiation are being used in a safe manner.

6. Approve changes in the radiation safety manual and recommend changes when these become necessary.

Section 3.2 Human Use of Radiation and Radionuclides Committee

The committee is composed of the chairman of the Radiology Department, the Director of Nursing Service, physicians who are experts in radiation therapy, nuclear medicine, internal medicine, hematology, a person experienced in the assay of radionuclides, and a member of the radiation safety office staff, as well as such additional members as shall be nominated by the chairman of the Radiological Safety Committee in consultation with the committee.

The committee meets at least quarterly to:

1. Adopt rules and policies pertaining to the use of ionizing radiation on humans.

2. Review and either approve or return for amendment all proposals for the use of radionuclides in humans.

3. Examine the qualifications of all persons proposing to use radionuclides in humans.

4. Review plans for all new buildings and modifications of existing buildings where ionizing radiation is to be used on humans and to send its recommendations to the Radiological Safety Committee.

5. Review proposed shielding and operations of all radiation producing machines and equipment used for the exposure of humans.

6. Review all instances of alleged infractions of rules and unsafe practices in the human use of ionizing radiation, and to take the steps necessary to ensure safe practice.

7. Review reports from the radiation safety office on those using ionizing radiation on humans and any changes or impending changes in regulations.

8. Ensure that all license obligations, federal and state regulations are met and that safe practice is maintained in the human use of ionizing radiation.

Section 3.3 Non-Human Use of Radiation and Radionuclides Committee

The committee is composed of a physician who is an expert in the use and properties of radionuclides, a person experienced in the assay of radionuclides, a member of the staff of the radiation safety office and others who may be nominated by the chairman of Radiological Safety Committee in consultation with the committee.

The committee meets at least quarterly to:

1. Adopt rules and policies on the in vitro use of sources of ionizing radiation at the Medical Center and at the Charleston Division.

2. Review and either approve or return for amendment all proposals for the in vitro use of ionizing radiation at the Medical Center or the Charleston Division.

3. Examine the qualifications of all persons proposing to use radionuclides in vitro at the Medical Center or the Charleston Division.

4. Review plans for all new buildings and modifications of existing buildings where ionizing radiation is to be used in vitro at the Medical Center or the Charleston Division and send its recommendations to the Radiological Safety Committee.

5. Review all instances of alleged infractions of rules and unsafe practices in the use of ionizing radiation in vitro at the Medical Center or the Charleston Division and take the steps necessary to ensure safe practice.

6. Review reports from the radiation safety office on those using ionizing radiation in vitro and any changes or impending changes in regulations.

7. Ensure that all license obligations, federal and state regulations are met and that safe practice is maintained in the vitro use of ionizing radiation at the Medical Center and Charleston Division.

Section 3.4 Animal Use of Radiation and Radionuclides Committee

The committee is composed of the director of the animal quarters, a person experienced in the assay of radionuclides, a member of the staff of the radiation safety office and others who may be nominated by the chairman of the Radiological Safety Committee in consultation with the committee.

The committee meets at least quarterly to:

1. Adopt rules and policies for the use of ionizing radiation in and on animals.

2. Review and either approve or return for amendment all proposals for the use of ionizing radiation on animals.

3. Examine the qualifications of all persons proposing to use radionuclides in animals.

4. Review plans for all new buildings and modifications of existing buildings where ionizing radiation is to be used in or on animals and send its recommendations to the Radiological Safety Committee.

5. Review all instances of alleged infractions of rules and unsafe practices in the use of ionizing radiation in or on animals and take the necessary steps to ensure safe practice.

6. Review reports from the radiation safety office on those using ionizing radiation on animals and any changes or impending changes in regulations.

7. Ensure that all license obligations, federal and state regulations are met and that safe practice is maintained in the use of ionizing radiation in and on animals.

Section 3.5 Radiation Research Committee

The committee is composed of physicists, chemists, and biologists experienced in the use of radionuclides, a member of the staff of the radiation safety office and others who may be nominated by the chairman of the Radiological Safety Committee in consultation with the committee.

The committee meets at least quarterly to:

1. Adopt rules and policies on the use of ionizing radiation on the Downtown and Evansdale campuses.

2. Review and either approve or return for amendment all proposals for the use of radiation or radionuclides on the Downtown or Evansdale campus.

3. Examine the qualifications of all persons proposing to use radionuclides on the Downtown or Evansdale campus.

4. Review plans for all new buildings and modifications of existing buildings where ionizing radiation is to be used on the Downtown or Evansdale campus and send its recommendation to the Radiological Safety Committee.

5. Review all instances of alleged infractions of rules and unsafe practices in using ionizing radiation on either the Downtown or Evansdale campus and take the necessary steps to ensure safe practice.

6. Review reports from the radiation safety office on those using ionizing radiation either Downtown or on the Evansdale campus and any changes or impending changes in regulations.

7. Ensure that all license obligations, federal and state regulations are met and that safe practice is maintained in the use of ionizing radiation Downtown and on the Evansdale campus.

Section 3.6 Large Source and Reactor Committee

This committee is composed of the Radiation Safety Officer, physicists and engineers as appointed by the president of the university. It's primary responsibility is to oversee the transfer of the reactor to a suitable party. While that is being accomplished, it is responsible for seeing to it that all applicable regulations are met during the storage and transfer periods.

Once this transfer has been accomplished, the committee will place the remaining large source, currently licensed "for possession only" under the jurisdiction of the Radiation Research Committee and terminate its activities.

OPERATING PROCEDURES FOR WVU COBALT-60 IRRADIATOR FACILITY

It is proposed that the sheet overleaf be used as a guide for operating instructions for the proposed facility. At no time will any person use the source without having been personally instructed by the authorized user.

A copy of these instructions in a plastic envelope will be attached to the front of the shield and replaced as age renders this unreadable.

A log-book will be maintained for the instrument, listing the name of user, date and time of use, readings from survey meter before and after lowering Cobalt-source into sample cavity and the reading after retraction into the safe position. A copy of the lay-out to a page in the log-book is reproduced below:

Representative Page from Log-Book

	Date	Time into Source	Time out of Source	Reading up (mR/hr)	Reading down (mR/hr)	Purpose of Irradiation and/or Comments on Source Behavior	Name
93							
94							
95							

OPERATING PROCEDURE FOR COBALT-60 IRRADIATOR

NOTE: THIS COBALT-60 IRRADIATION FACILITY IS FITTED WITH A MECHANICAL SAFETY INTERLOCK SYSTEM THAT CAN ONLY BE USED BY FOLLOWING THE SEQUENCE BELOW. ATTEMPTS TO CIRCUMVENT THIS INTERLOCK SYSTEM WILL CAUSE DAMAGE TO THE OPERATING MECHANISM AND CONSEQUENT EXPENSES FOR ITS RENOVATION.

FOLLOW THE SEQUENCE SHOWN TO YOU AND DETAILED BELOW.

1. CHECK THAT SOURCE ROD IS IN THE "UP-POSITION" WITH THE SOURCE ROD OPERATING HANDLE AGAINST THE UPPER STOPS, IF SO, THEN OPEN DOOR TO CAVITY. IF 24-HOUR ALARM MONITOR TRIGGERS, THEN CLOSE DOOR IMMEDIATELY AND NOTIFY RADIATION SAFETY AT ONCE. DO NOT PROCEED ANY FURTHER.

2. PLACE SAMPLE IN CAVITY AND CLOSE DOOR GENTLY TO ALIGN THE HOLE IN THE DOOR WITH THE SLIDE BOLT.

3. USING THE SURVEY METER TAKE A READING OF THE BACKGROUND COMING FROM THE CAVITY THROUGH THE DOOR AND NOTE THIS READING IN THE LOG-BOOK UNDER THE COLUMN "READING UP."

4. PUSH THE SLIDE-BOLT INTO ITS LOCATING TUBE IN THE DOOR.

5. ROTATE INNER CYLINDER TO STORAGE TURRET VIA HANDLE ON THE SIDE OF THE STORAGE TURRET UNTIL HANDLE IS IN THE "OPERATE" POSITION.

6. GENTLY AND SLOWLY BRING DOWN THE SOURCE ROD TO THE REQUIRED DEPTH USING THE HANDLES PROVIDED AND NOT THE STAINLESS STEEL ROD ITSELF.

7. USING THE SURVEY METER NOTE READING FROM THE BACKGROUND THROUGH DOOR, THIS WILL PROBABLY BE HIGHER THAN THE PREVIOUS READING. NOTE THE VALUE IN THE LOG-BOOK UNDER COLUMN MARKED "READING DOWN."

8. AT THE TERMINATION OF THE IRRADIATION PERIOD LIFT THE SOURCE ROD GENTLY BACK TO ITS ORIGINAL POSITION TOUCHING THE STOPS PROVIDED.

9. TURN INNER CYLINDER HANDLE TO "SAFE" POSITION.

10. USING METER, CHECK BACKGROUND THROUGH DOOR TO DETERMINE WHETHER THE SOURCE HAS RETRACTED SAFELY TO ITS STORAGE POSITION. METER READINGS SHOULD BE COMPARABLE TO THOSE TAKEN IN "READING-UP" ABOVE. IN LOG-BOOK NOTE READING UNDER COLUMN HEADED "READING RETRACT." IF THE READING IS COMPARABLE YOU MAY PROCEED: IF IT IS NOT, CONTACT RADIATION SAFETY.

11. REMOVE SLIDE BAR FROM DOOR SOCKET AND STANDING TO ONE SIDE OF THE CAVITY AND SHIELDED BY THE DOOR, SLIDE THE DOOR BACK. IF THE 24-HOUR ALARM MONITOR TRIGGERS, CLOSE AT ONCE AND CONTACT RADIATION SAFETY IMMEDIATELY.

12. REMOVE YOUR SAMPLE AND CLOSE DOOR AGAIN.

IF AT ANY TIME THE OPERATING HANDLES WILL NOT EASILY MOVE, OR MORE THAN USUAL OPERATING FORCE SEEMS TO BE NEEDED, DO NOT FORCE THEM. CHECK THAT THE INTERLOCK MECHANISM IS NOT PREVENTING MOVEMENT, AND IF THIS APPEARS TO BE CORRECTLY ALIGNED AND THE LEVER/HANDLES WILL NOT MOVE, THEN CONTACT RADIATION SAFETY BEFORE PROCEEDING.

NOTICE

EMERGENCY PROCEDURES FOR THE COBALT-60 IRRADIATION FACILITY IN THE BASEMENT OF CHEMISTRY RESEARCH LABORATORIES

1. A Chemistry Department Co-60 Irradiation Facility is located in the basement of Chemistry Research Laboratories (CRL) in Room B-3 adajacent to the liquid nitrogen generator in Room 54 of this building.

2. The facility utilizes steel enclosed lead blocks to shield approximately 360 curies of Cobalt-60.

3. An alarm system consisting of a visible (flashing red light) and audible (intermittent "shrieking" sound) warning is fitted in the room, and an extension system (audible and visible) is mounted on the wall outside the room 54 in the corridor adjacent to the elevator in the basement.

EMERGENCY ACTION

If you hear an intermittent "shrieking" noise accompanied by a flashing light from the alarm system, the following actions should be taken:

4. Evacuate the basement level and the rooms directly above the irradiator.

5. Contact the Centrex Operator (Dial 0 on a University phone), or the Radiation Safety Office (3413)

6. Notify the W.V.U. Campus Security Police and have them prevent personnel from assembling in the walk-way between CRL and Clark Hall of Chemistry.

7. Do not re-enter the indicated areas until one of the above persons has indicated that it is safe to do so.

DO NOT REMOVE THIS SIGN OR NOTICE. THE UNITED STATE NUCLEAR REGULATORY COMMISSION REGULATIONS REQUIRE THAT IT BE POSTED AT ALL TIMES.

Stephen T. Slack
Radiation Safety Officer

15.11 1 April 1979

Section 9.5: Sealed Sources and Leak Tests

9.5.1 Commercially Obtained Sealed Sources

1. These sources will be given an initial leak test by Radiation Safety personnel when they arrive at the Radiation Safety Office.

2. Subsequent leak tests will be done by Radiation Safety personnel and require no action on your part except assistance, as needed, with performing the test.

3. No sealed source commercially obtained is to be opened or to have the contents removed.

4. Report immediately to the Radiation Safety Office all lost or deteriorating sealed sources.

9.5.2 Sources Manufactured by University Personnel

1. Sealed Sources If you wish to make your own sealed source, then:

   (a) Notify the Radiation Safety Office, requesting that the source be tested for contamination or leakage, immediately after it is fabricated.

   (b) After initial notification to the Radiation Safety Office, no further action is required. The Radiation Safety Office will conduct the required periodic leak test, which are the same as for a commercially manufactured source.

2. Unsealed Sources

   Definition: Radioactive material that is deposited on a backing but has no cover. Planchets and other transiently used items are not included.

   (a) These sources must be placed in individual boxes or other closed containers and marked with the radionuclides. approximate amount, and date. Attach a "Caution - Radioactive Material" sticker to the box.

   (b) Once a particular source has been assigned to a certain box, do not store the source in any other box. When a flaking or decayed source is disposed of, dispose of the box also.

These unsealed sources are susceptible to flaking of the material with age. Therefore, with the help of the laboratory personnel, the Radiation Safety Office will periodically check for deteriorating sources.

Note: Report immediately to the Radiation Safety Office all lost or deteriorating sealed or unsealed sources.

CCMD 350 Radiation Safety and Radionuclide Use

Text: "Radioactive Isotopes in Biological Research" by William R. Hendee. John Wiley & Sons.

Jan 4. Introduction. The atom. Bohr's postulates. Spectra. Characteristic X-rays. Auger electrons.

Jan 9. The Nucleus. Mass defect and binding energy. Stable and unstable nuclei. Alpha decay. Gamma decay. Internal conversion electrons.

Jan 11. The Nucleus. Beta decay: negatron and positron. Electron capture. Exponential decay and half life. The Curies and Becquerel Production of Radionuclides.

Jan 16. Interaction of Radiation with Matter. Photoelectric effect, Compton scattering and pair production. Excitation, ionization and bremsstrahlung. Linear energy transfer. Attenuation and shielding.

Jan 18. Radiation Detection and Measurement. Ionization chambers. The Roentgen. Proportional and Geiger counters. Pocket dosimeters. Film and thermoluminescent dosimeters.

Jan 23. Radiation Detection and Measurement. Scintillators. Photomultiplier tubes. Semiconductors.

Jan 25. Radiation Dose. Rad and Gray. f-factor. Dose equivalent. The rem. Typical doses from various activities. Dose from internally deposited sources: effective half life.

Jan 30. Radiation Biology. Interaction of radiation with the cell. Free radicals. Cell survival curves.

Feb 1. Radiation Biology. The cell cycle. Damage and repair. Relative biological effectiveness.

Feb 6. Radiation Biology. Acute radiation syndromes. Cataracts. Cell mutations.

Feb 8. Radiation Biology. Genetic effects. Special considerations on pregnancy.

Feb 13. Principles of Radiation Protection. Maximum permissible dose. Time, distance and shielding. Hygiene. Environmental control.

Feb 15. Principles of Radiation Protection. Medical surveillance. Personnel monitoring. Contamination surveys. Leak testing. Air sampling.

Feb 20. Rules and Regulations. Licensing. Restricted areas. Transportation. Reporting.

Feb 22. Mid-term examination

CCMD 350 Second Half

Mar 6	Liquid Scintillation Counting I	K. Van Dyke
Mar 8	Liquid Scintillation Counting II	K. Van Dyke
Mar 13	Considerations in Measurements I	J. Lai
Mar 15	Considerations in Measurements II	J. Lai
Mar 20	Considerations in Measurements III	J. Lai
Mar 22	Considerations in Measurements IV	J. Lai
Mar 27	Tracers I	V. Castranova
Mar 29	Tracers II	V. Castranova
Apr 3	Tracers III	V. Castranova
Apr 5	In Vitro Techniques	J. Lai
Apr 10	Autoradiography	R. Reyer
Apr 12	Radioimmunoassay	R. Butcher
Apr 17	Nuclear Medicine Applications I	C. Goodwin
Apr 19	Tour of Nuclear Medicine & other Clinical Areas	S. Slack
Apr 24	Nuclear Medicine Applications II	C. Goodwin
Apr 26	Unusual Applications	S. Slack

Subject to change without notice.

Final examination as scheduled during exam week.

15.16 1 April 1979