**Lewis Sumner**
Vice President
Hatch Project Support

**Southern Nuclear**
**Operating Company, Inc.**
40 Inverness Parkway
Post Office Box 1295
Birmingham, Alabama 35201

Tel 205.992.7279
Fax 205.992.0341

SOUTHERN COMPANY
*Energy to Serve Your World*℠

September 5, 2001

Docket Nos. 50-321
50-366

HL-6123

U. S. Nuclear Regulatory Commission
ATTN.: Document Control Desk
Washington, DC 20555

Edwin I. Hatch Nuclear Plant
Transmittal of Additional Information For License
Renewal Draft Safety Evaluation Report Open Items

Ladies and Gentlemen:

By letter dated June 5, 2001 Southern Nuclear Operating Company (SNC) formally transmitted the collected responses to eighteen open items contained in the draft license renewal Safety Evaluation Report to NRC. Since that time additional information has been developed on several open items, and Appendix B, the FSAR Supplement, and various application sections have been revised. This letter formally transmits all additional information related to the Hatch license renewal application and the related open items, and is intended to complete the documentation necessary to allow the open items to be closed by the NRC.

If you have any questions concerning this information, please contact this office.

Respectfully submitted,

Lewis Sumner

H. L. Sumner, Jr.

HLS/JAM

Enclosures:
1. Supplemental Information Subsequent to the June 5, 2001 SNC Letter to NRC
2. Revised LRA Pages
3. Revised Appendix B
4. Revised FSAR Supplement
5. Small-Bore Piping Evaluation Report

A083

cc: Southern Nuclear Operating Company
Mr. P. H. Wells, Nuclear Plant General Manager
Mr. C. R. Pierce, License Renewal Services Manager

U. S. Nuclear Regulatory Commission, Washington, D.C.
Mr. C. I. Grimes, Branch Chief, License Renewal and Standardization Branch
Mr. L. N. Olshan, Project Manager-Hatch
Mr. W. F. Burton, Project Manager-Hatch License Renewal (w/ enclosure)

U. S. Nuclear Regulatory Commission, Region II
Mr. L. A. Reyes, Regional Administrator
Mr. J. T. Munday, Senior Resident Inspector-Hatch

ENCLOSURE 1

# PLANT HATCH LICENSE RENEWAL APPLICATION

# SUPPLEMENTAL INFORMATION

# SUBSEQUENT TO THE JUNE 5, 2001 SNC LETTER TO NRC

## Table of Contents

**INTRODUCTION** *1*

**SECTION 1 - DGMA** *2*

**SECTION 2 - ENVIRONMENTAL EFFECTS OF REACTOR COOLANT WATER** *3*

**SECTION 3 - HYDROGEN RECOMBINER HEATER** *4*

**SECTION 4 - MISCELLANEOUS ITEMS** *5*

- **GSCI Appendix B Wording Changes**
- **PCP Appendix B Wording Changes**
- **PSW & RHRSW Inspection Program FSAR Supplement Wording Changes**
- **SMP FSAR Supplement Wording Changes**
- **TWSPI Appendix B Wording Changes**

**SECTION 5 - PIPE BREAK CRITERIA** *6*

**SECTION 6 - SEISMIC II/I** *7*

**SECTION 7 - SMALL-BORE PIPING** *11*

## INTRODUCTION

By a June 5, 2001 letter, SNC addressed various open items in the draft NRC SER for Plant Hatch. At that time, certain open items had not yet been completely resolved. This letter provides documentation of the resolution and closure of the remaining open items. In addition, various clarifications are provided as a result of telecons and electronic communications subsequent to June 5, 2001. Table 1 is a listing of e-mails that are documented by this letter.

**Table 1**

***Listing of Electronic Communications Documented***

| | |
|---|---|
| June 18 SNC e-mail | re: small-bore piping |
| June 19 SNC e-mail | re: Seismic II/I |
| June 25 SNC e-mail | re: various topics |
| July 5 SNC e-mail | re: small-bore piping |
| July 13 SNC e-mail | re: various topics |
| July 24 SNC e-mail | re: various topics |
| July 26 NRC e-mail | re: environmental effects |
| August 3 SNC e-mail | re: Seismic II/I |
| August 14 SNC e-mail | re: DGMA |
| August 30 SNC e-mail | re: hydrogen recombiner heater |

The supplemental information provided by this document is arranged by topic. During the process of comment resolution, SNC provided NRC with revisions to certain license renewal document pages. Revised LRA pages, as noted in this document, are provided in Enclosure 2. Revised Appendix B pages are provided in Enclosure 3. Revised FSAR Supplement pages are provided in Enclosure 4.

**SECTION 1 - DGMA**

By a July 26, 2001 e-mail, NRC requested several wording changes for the DGMA program description in the FSAR Supplement. In a subsequent telecon, NRC concurred with a SNC request regarding removal of superfluous wording in the Appendix B program description. On August 14, SNC provided revised wording for the Appendix B and FSAR Supplement DGMA program descriptions. The revisions are pursuant to comments in NRC's July 26 e-mail and the subsequent telecons between NRC and SNC. Revised Appendix B pages are provided in Enclosure 3. Revised FSAR Supplement pages are provided in Enclosure 4.

## SECTION 2 - ENVIRONMENTAL EFFECTS OF REACTOR COOLANT WATER

By a June 25, 2001 e-mail, SNC provided a response to draft SER Open Item 4.2.3-1, regarding environmental effects of reactor coolant water, that addressed resolution of the open item with NRC. Subsequent to that e-mail, NRC further requested in its July 26, 2001 e-mail, that SNC delete the last sentence of the June 25 SNC response. The removal of the sentence is provided for clarity and consistency with the open item resolution. Thus, the revised response to Open Item 4.2.3-1 is as follows:

**Response to Open Item 4.2.3-1**

SNC appealed the NRC staff's requirement to evaluate the six locations identified in NUREG/CR-6260 as requested by NRC staff in a June 6, 2001 meeting with NRC management. Following discussion of this item, NRC management concluded that while the SNC approach might result in an acceptable response, given enough time and data to evaluate the generic comparisons being presented, in order to maintain the review schedule, an approach consistent with the staff request must be followed. Subsequently, a telecon was held on June 18, 2001 to clarify details of the NRC request. Based on that telecon, and the July 26 NRC e-mail request, the following information represents SNC's response to this open item.

Discussions with the NRC staff have indicated that detailed fatigue calculations need to be developed for Hatch for the seven locations identified in NUREG/CR-6260 for the older vintage BWR plant. A "map" of the equivalent seven Hatch-specific locations is provided in Table 3 of the response to Hatch RAI 4.2-2 (the NRC staff concurred with the accepability of this approach in the June 19 telecon). For each of these seven locations, detailed environmental fatigue calculations will be performed using the appropriate Fen relationships from NUREG/CR-6583 (for carbon/low alloy steels) and NUREG/CR-6704 (for stainless steels), as appropriate for the material for each location. The detailed calculations will include calculation of an appropriate Fen factor for each individual load pair in the governing fatigue calculation so that an overall multiplier on CUF for environmental effects can be determined for each location.

On July 24, 2001 SNC provided a revised Appendix B program description to NRC via e-mail for the CCTLP, reflecting resolution of the open item as described in the above response. Revised Appendix B pages are provided in Enclosure 3.

## SECTION 3 - HYDROGEN RECOMBINER HEATER

On June 5, 2001 SNC provided additional information regarding Open Item 2.3.3.2-1 (a) regarding aging management review of certain hydrogen recombiner components. In that response, SNC provided a revised list of components subject to aging management review based on the resolution of the open item. That resolution included the identification of skid-mounted hydrogen recombiner components that formed a part of the containment pressure boundary during normal operation and testing.

During an August 30, 2001 telecon, NRC requested clarification regarding the status of the hydrogen recombiner heater noted in the open item. Since the heater is electric and does not form a part of the pressure boundary, the component was identifed as active and not subject to aging management review. Thus, it was not included in the list of items subject to aging management review in the June 5, 2001 response.

## SECTION 4 - MISCELLANEOUS ITEMS

### GSCI Appendix B Wording Changes

During the March, 2001 NRC implementation inspection, it was noted that Appendix B, Section 3.1 (GSCI) did not include E21 in scope. Conforming page changes are provided in Enclosure 3 of this letter.

### PCP Appendix B Wording Changes

During the March, 2001 NRC implementation inspection, it was noted that Appendix B, Section 2.3 (PCP) did not include T52 in scope. Conforming page changes are provided in Enclosure 3 of this letter.

### PSW & RHRSW Inspection Program FSAR Supplement Wording Changes

**Supplemental Response to Open Item 2.3.3.2-2 (a), (c), (d)**
On page 41 of the consolidated responses to draft SER open items, submitted by SNC on June 5, 2001 the Appendix B.1.13 program description for the PSW and RHRSW Inspection Program was revised to add descriptive language regarding monitoring and trending of ECCS room cooling coils and control room condensing unit tubes. However, revision of the corresponding section of the FSAR Supplement, 18.2.13 was not included in the response. The revised FSAR Supplement page is provided in Enclosure 4 to this letter.

### SMP FSAR Supplement Wording Changes

**Supplemental Response to Open Item 3.6.3.1-1**
This response supplements the response provided NRC via letter dated June 5, 2001. In that response, SNC provided revised wording for Appendix B Section 2.5, Structural Monitoring Program (SMP), to describe activities associated with monitoring secondary containment leaktightness. The corresponding FSAR Supplement section, 18.3.5, was also revised to incorporate discussion regarding this enhancement to the SMP. This supplemental response expands the FSAR Supplement discussion 'Scope' and 'Parameters Inspected or Monitored' sections to also include the revised Appendix B wording. The revised FSAR Supplement pages are provided in Enclosure 4 to this letter.

### TWSPI Appendix B Wording Changes

During the March, 2001 NRC implementation inspection, it was noted that Appendix B, Section 3.2 (TWSPI) did not include E11 in scope. Conforming page changes are provided in Enclosure 3 of this letter.

## SECTION 5 - PIPE BREAK CRITERIA

During a June 18, 2001 telecon with NRC staff, SNC discussed resolution plans for draft SER Open Item 4.1.3-1 (b) regarding pipe break criteria. In that telecon, SNC indicated that in order to achieve resolution of the open item, the subject calculations would be called a TLAA, and that three locations would be identified for monitoring based on selection criteria sorted first on usage factors and secondarily based on systems and transients, such that the locations selected to be monitored would come from different systems and will be representative of and bounding for all subject locations.

By a June 25, 2001 e-mail, SNC provided a response to draft SER Open Item 4.1.3-1(b), regarding pipe break criteria that addressed resolution of the open item with NRC. Subsequent to that e-mail, NRC further requested in its July 18, 2001 e-mail, that SNC provide a revised Appendix B and FSAR Supplement program description for CCTLP reflecting the open item resolution. The response to Open Item 4.1.3-1(b) is as follows:

> **Response to Open Item 4.2.3-1 (b)**
>
> SNC appealed the NRC staff's requirement to consider pipe break criteria as TLAAs in a June 6, 2001 meeting with NRC management. Following discussion of this item, NRC management ruled that SNC must consider pipe break criteria as TLAAs, and further stated that the aging effect being managed (thus meeting criterion 2 as stated in 10 CFR 54.3) is cracking. The following information is submitted pursuant to NRC management direction in the June 6, 2001 meeting.
>
> Page 4.2-2 of the Plant Hatch LRA is revised to remove the explanation of SNC's basis for originally concluding that the pipe break criteria calculations were not TLAAs. In its place, a new section 4.2.5 has been generated to identify the pipe break criteria as TLAAs, and to address the disposition of the TLAAs.

Revised LRA pages are provided in Enclosure 2. Revised Appendix B pages are provided in Enclosure 3. Revised FSAR Supplement pages are provided in Enclosure 4.

## SECTION 6 - SEISMIC II/I

During the May 24, 2001 Technical Meeting on Seismic II/I, NRC staff requested that SNC provide additional technical information regarding various aspects of plant design as they relate to nonsafety-related piping. A series of questions and answers intended to provide that additional information was supplied to NRC via a June 19, 2001 e-mail. That information has been docketed previously, and therefore, is not included with this submittal.

Based on resolution of the open item, SNC provided revised Appendix B and FSAR Supplement program descriptions for the SMP via a July 24, 2001 e-mail. Revised Appendix B pages are provided in Enclosure 3. Revised FSAR Supplement pages are provided in Enclosure 4.

Based on various telecon discussions, SNC provided a revised documentation of the resolution of draft SER Open Item 2.1.3.1-1 via e-mail on August 3, 2001. Additional editorial changes were discussed with NRC via telecon on August 16, 2001. The following text documents the information provided in that e-mail, as modified by the editorial changes discussed in the August 16, 2001 telecon:

### Additional Information - Open Item 2.1.3.1-1

As discussed with NRC in telephone conversations on July 17 and July 18, 2001, SNC will bring certain piping into scope. This piping includes nonsafety-related piping whose structural degradation could adversely affect nearby safety related components (i.e. seismic II/I piping within the context of §54.4(a)(2)), as well as nonsafety-related piping that is attached to safety related piping from the safety class break to the anchor, as credited in the seismic analysis (i.e. attached piping).

#### Seismic II/I Piping

The programs to be credited for managing the aging effects of the seismic II/I piping are:

1. Water Chemistry Controls
2. Flow Accelerated Corrosion (FAC) Program
3. Structural Monitoring Program
4. Corrective Actions Program (in conjunction with each of the above programs)
5. One-time confirmatory inspections

With the exception of the increased scope, the credited programs are not different than those described in Appendix B. The attached table summarizes the management of aging effects for seismic II/I piping and includes revisions pursuant to an August 2, 2001 telecon with NRC.

The FAC Program will be applied for those high energy lines that are susceptible to FAC. Via e-mail, SNC previously indicated that some low-to-moderate energy piping might be susceptible to FAC. Further detailed review of the seismic II/I

piping scope indicates that none of the newly in scope low to moderate energy piping is susceptible to FAC. Also in the previous e-mail, SNC indicated that some of the high energy piping might be made from galvanized steel or cast iron. The detailed review indicates that for the seismic II/I piping, only the high energy carbon steel piping is FAC-susceptible. The attached table has been modified to reflect the results of the detailed review.

To manage loss of material (due to the various corrosion mechanisms, other than FAC) and cracking (due to stress corrosion cracking of stainless steel) in the seismic II/I piping, the following approach will be taken. For all of this piping that can experience loss of material or cracking, area walk-downs will be conducted to detect leaks in the piping. These area walk-downs will be conducted as an augmentation of the existing structural monitoring program. These walk-downs will employ the "spaces approach" as successfully applied to both electrical and civil (i.e. supports) components in the Plant Hatch License Renewal Application. Leaks detected will be identified and addressed through the same corrective actions program that is applied to the other in-scope components and structures.

The spaces for seismic category II/I piping that will be included in the walkdowns are as follows:

Reactor building
Control building
Intake structure
Diesel building
Turbine building (limited to space above condenser system)

As a further measure of prudence, for the high energy seismic II/I piping, the chemistry controls appropriate for the piping system will be used and the piping will be added to the scope of components for the appropriate one-time confirmatory inspection. An example of the chemistry control and one-time inspection combination is the use of the reactor water chemistry control in conjunction with the treated water systems piping inspection to manage corrosion in the carbon steel portions of the reactor water clean-up system that are seismic category II/I.

**Connected Piping**

For the nonsafety-related piping that is attached to safety-related piping, SNC agrees that the primary aging effect of concern is loss of material, including loss of material due to FAC. SNC is committed to managing this piping for this aging effect throughout the renewal period. To that end, SNC intends to use the same aging management programs for the connected, nonsafety-related piping as are used for the safety-related piping, where those programs are credited for managing loss of material. If exceptions are identified in the future, where the credited programs do not manage the aging effects, then SNC will alter the aging management programs to assure proper aging management and process those alterations in accordance with 10CFR54.37(b) and 10CFR50.59, as applicable.

**GDC 2 and 4 Consideration**

Devices that mitigate the effects of high energy and moderate energy line breaks, including pipe whip and jet impingement, spray, and flooding, that are located in the reactor buildings, control buildings, and turbine buildings at Plant Hatch, are included in the scope of license renewal. These devices received an aging management review, and any detrimental aging effects are managed.

The Plant Hatch "Hazard Analysis Base Document", Units 1 and 2 FSARs, and LR screening records were reviewed to identify these devices. Unit 1 FSAR Appendices N.3.2 and N.6, and Unit 2 FSAR sections 15A.3.2.D and 15A.6 discuss the inherent plant safety features with respect to design against HE pipe failures and physical modifications made to the plant to mitigate the effects of postulated high-energy line breaks.

## Management of Aging Effects for Seismic II/I Piping

| Environment | Material | Intended Function | Aging Effects Requiring Management | Program |
|---|---|---|---|---|
| Exterior – protected<br>Interior – not normally liquid filled | All | Limited structural integrity * | None | None required** |
| Exterior – protected<br>Interior – liquid<br><br>(high energy only) | Carbon Steel | Pressure boundary | Loss of Material due to Flow Accelerated Corrosion | FAC Program |
| Exterior – protected<br>Interior – liquid<br><br>(high energy only) | Carbon Steel | Limited Structural integrity * | Loss of Material due to Corrosion | Water Chemistry Controls; One-Time Confirmatory Inspection (e.g., TWSPI); Structural Monitoring Program (leak detection) |
| Exterior – protected<br>Interior – liquid<br><br>(low and moderate energy) | Carbon & Galvanized steels; Cast iron | Limited structural integrity * | Loss of Material due to Corrosion | Structural Monitoring Program (leak detection) |
| Exterior - protected<br>Interior – liquid | Stainless steels under 140°F, brasses, and copper | Limited structural integrity * | None | None required** |
| Exterior – protected<br>Interior – liquid<br><br>(low and moderate energy) | Stainless steels above 140 °F | Limited structural integrity * | Cracking | Structural Monitoring Program (leak detection) |
| Exterior – protected<br>Interior – liquid<br><br>(high energy) | Stainless steels above 140 °F | Limited structural integrity * | Cracking | TWSPI; Water Chemistry Controls; Structural Monitoring Program (leak detection) |

* Limited structural integrity is defined as sufficient structural integrity to preclude detrimental effects on safety-related functions.

** Regardless of the lack of aging effects, the piping will also be subject to general area walkdowns.

## SECTION 7 - SMALL-BORE PIPING

NRC staff presented a revised position at the June 6, 2001 appeal meeting regarding draft SER Open Item 3.2.3.2.3-1 on thermal fatigue resulting from thermal stratification or turbulent penetration in small-bore piping. Based on the staff's presentation, SNC prepared a report that summarizd the evaluation methodology used to demonstrate that there are no locations in non-socket welded small-bore Class 1 piping at Plant Hatch that are susceptible to the thermal fatigue mechanisms identified in the open item. The "Small Bore Piping Evaluation Report" is provided in Enclosure 5 to this letter.

During discussions regarding the fatigue-related questions associated with draft SER Open Item 3.2.3.2.3-1, NRC staff raised a question regarding stress corrosion cracking as related to the Class 1 small-bore piping at Plant Hatch. Specifically, the staff questioned which aging management programs were applied to a 4 NPS section of stainless steel, butt-welded piping associated with the ECP monitor. This general question was originally asked as RAI 3.2.3.2-8. In the response to that RAI, SNC identified systems containing Class 1 small-bore piping. The systems listed include the segment of piping in question. In the response to the RAI, SNC further stated that in order to manage aging associated with IGSCC in those systems, SNC has credited reactor water chemistry control, coupled with either the ISI program (for two inch and larger piping in these systems) or the Treated Water Systems Piping Inspections (for piping in these systems that is not included in the ISI program). Appendix B, section B.3.2 describes the TWSPI. As part of the population of piping subject to the TWSPI, the piping segment will be subject to the sampling inspection program described in Appendix B, Section B.3.2. As stated in the 'Paramaters Inspected or Monitored' program section, inspection locations will be based on engineering judgement and will include areas predicted to be most susceptible to corrosion, erosion-corrosion, erosion, and cracking.

For additional information regarding this segment of piping, please see the "Small-Bore Piping Evaluation Report," Enclosure 6 to this letter. In that report, Figure 1 provided a description of the piping segment. Additionally, on Page 5, SNC provided details as to why additional inspections, that is, beyond those referenced in the response to RAI 3.2.3.2-8, are not required.

Subsequently, via additional telecon discussions, NRC staff asked SNC to explicitly designate the NPS 4 segment of small-bore piping identified on Figure 1 of the "Small-Bore Piping Evaluation Report" (Enclosure 6 to this letter) as being included within the scope of the TWSPI. As was indicated to NRC staff, SNC views this request to have been unnecessary, since the Appendix B program description for the TWSPI already clearly includes the segment of piping identified in Figure 1. No exclusionary language was used in the program description that could be viewed to exclude the piping segment. However, because the NRC staff request is a clarification that does not result in an additional programmatic commitment, SNC has agreed to revise the program description to explicitly include the small-bore piping segment in the program scope. The revised Appendix B program description page is provided in Enclosure 3, and the revised FSAR Supplement program description page is provided in Enclosure 4.

**ENCLOSURE 2**

**EDWIN I. HATCH NUCLEAR PLANT**

**DOCKETS 50-321, 50-366**

**OPERATING LICENSES DPR-57, NPF-5**

**REVISED LRA PAGES**

**LICENSE RENEWAL DOCUMENTATION**

**SEPTEMBER 5, 2001**

# Section 4

# TIME-LIMITED AGING ANALYSES

## CONTENTS


| | | |
|---|---|---|
| **4.1** | **INTRODUCTION** | **4.1-1** |
| **4.1.1** | **Identification and Evaluation of Time-Limited Aging Analyses** | **4.1-1** |
| | 4.1.1.1 Procedure | 4.1-1 |
| | 4.1.1.2 Identification of Exemptions | 4.1-2 |
| **4.2** | **PIPE STRESS TIME-LIMITED AGING ANALYSES** | **4.2-1** |
| **4.2.1** | **Current Licensing Bases for Fatigue Cycles at Plant Hatch** | **4.2-1** |
| **4.2.2** | **Evaluation of Class 1 Components** | **4.2-1** |
| **4.2.3** | **Evaluation of Time-Limited Aging Analyses for Non-Class 1 Piping** | **4.2-3** |
| **4.2.4** | **Evaluation of the Torus** | **4.2-6** |
| **4.2.5** | **Pipe Break Criteria** | **4.2-6** |
| **4.3** | **CORROSION ALLOWANCE** | **4.3-1** |
| **4.3.1** | **Bechtel Power Corporation Scope of Supply** | **4.3-1** |
| **4.3.2** | **General Electric Scope of Supply** | **4.3-2** |
| **4.4** | **ENVIRONMENTAL QUALIFICATION OF ELECTRICAL EQUIPMENT** | **4.4-1** |
| **4.4.1** | **Process for Identifying EQ TLAAs** | **4.4-2** |
| **4.4.2** | **Hatch Environmental Qualification Program Summary Description** | **4.4-2** |
| **4.4.3** | **Hatch EQ Program Responsibilities** | **4.4-3** |
| **4.4.4** | **EQ Process** | **4.4-4** |
| **4.4.5** | **Environmentally Qualified Equipment Subject to TLAA Demonstration** | **4.4-9** |
| **4.5** | **CONTAINMENT PENETRATION PRESSURIZATION CYCLES** | **4.5-1** |
| **4.6** | **REACTOR VESSEL TLAAS** | **4.6-1** |
| **4.6.1** | **Equivalent Charpy Upper-Shelf Energy Margin Analysis** | **4.6-1** |
| **4.6.2** | **Nil-Ductility Reference Temperature Adjustments** | **4.6-1** |
| **4.6.3** | **Circumferential Weld Inspection Relief** | **4.6-1** |
| **4.7** | **MAIN STEAM ISOLATION VALVES OPERATING CYCLES** | **4.7-1** |
| **4.8** | **GENERAL REFERENCES** | **4.8-1** |

For Plant Hatch, the CUF carries further importance in that Southern Nuclear also used the predicted CUF as a screening criterion to establish locations to be monitored, inspection locations, and the locations of assumed pipe breaks for accident analysis. Southern Nuclear has followed the guidance of NRC Branch Technical Position MEB 3-1, as expressed in Regulatory Guide 1.46 (Ref. 4), with respect to determining break locations for accident analysis.

Because of explicit commitment to Branch Technical Position MEB 3-1 in the Plant Hatch licensing basis, Southern Nuclear has considered the CUF $\leq$ 0.1 criterion, and will continue to consider the criterion, when stress calculations are revised as a result of plant design modifications or changes in operating parameters.

Southern Nuclear has addressed the Class 1 fatigue TLAAs through an aging management program {demonstration of Criterion (iii) of 10 CFR 54.21 (c) (1)}. This program monitors the CUF of specific bounding locations for Class 1 components at Plant Hatch. The CUF-monitoring program is a complement to other aging management program elements, such as the inservice inspection program. The CUF-monitoring program was implemented in two phases.

The first phase, developed by GE in 1985, included limiting locations in the reactor pressure vessel (RPV). As a result of this phase of the program, Plant Hatch monitors CUF for four components in the RPV. These components are the RPV closure studs, the RPV shell, the RPV recirculation inlet nozzles, and the RPV feedwater nozzles. These components are monitored for both units (References 5 & 6). The decision criteria for selecting the RPV locations were based on the highest calculated CUFs from the design basis (e.g., fatigue-sensitive locations).

For the second phase of the CUF monitoring program, Southern Nuclear expanded the CUF monitoring program to include Class 1 piping. Conservative equations (Ref. 7) were developed into which actual plant transient counts could be input to estimate the CUF. The equations were developed to monitor the CUF for the limiting locations in each Class 1 piping system where the 40-year predicted CUF exceeded 0.1 in the original analysis. The choice of the 0.1 CUF decision criterion was not related to the MEB 3-1 commitment. This decision value includes sufficient margin, together with explicit fatigue design conservatisms, to account for potential reactor water environmental effects in the selection process.

Much of the conservatism in the design basis calculational process is due to design basis transient definitions. The equations for both the RPV and the Class 1 piping locations are conservatively based on such transient definitions. Based on the several EPRI license renewal fatigue studies, Southern Nuclear concludes that the fatigue impact of conservative design basis transient definitions by themselves overwhelms any potential impact of reactor water environmental effects. Therefore, the use of design basis transient severity in the CUF equations is another conservatism that more than compensates for potential reactor water environmental effects.

Based on the decision criteria and the conservative formulae, the effects of the reactor water environment have been adequately incorporated into the Plant Hatch fatigue management program. Therefore, the "thermal fatigue" aging mechanism identified throughout this application is considered to also encompass any relevant reactor water environmental effects (GSI 190 – Fatigue Evaluation of Metal Components for 60 years).

### 4.2.4 EVALUATION OF THE TORUS

The calculation review for TLAAs identified several calculations that met the six criteria and that addressed fatigue (both dynamic and thermal) of the torus structure. Southern Nuclear reviewed these calculations and determined that a new analysis was necessary to address fatigue in the torus for the extended license term. The analysis (Ref. 8) required an extensive and detailed review of pressure and thermal transients for the torus. Plant operating records and the Plant Unique Analysis Reports, prepared for the Mark I Containment Long Term Program, were consulted in the review. From the review, Southern Nuclear determined that the critical event leading to fatigue of the torus was the lifting of one or more main steam system safety relief valves (SRV).

The analysis concluded that the CUF could be monitored by tracking the number of SRV lifts. The analysis developed formulae for calculating the CUF at any given time during the current and extended license terms based upon the number of SRV lifts. Southern Nuclear has chosen to manage the fatigue of the torus by tracking the SRV lifts and evaluating the fatigue usage for the torus during the current and extended license term {demonstration through Criterion (iii) of 10 CFR 54.21(c)(i)}. This aging management program, "Component Cyclic or Transient Limit Program," is discussed in appendix A.1.12.

### 4.2.5 PIPE BREAK CRITERIA

SNC applied the criteria of Branch Technical Position MEB 3-1 to the Class 1 piping in both units. A screening criterion of 0.1 CUF was used, along with other criteria from the Branch Technical Position, in establishing postulated break locations for the piping. Piping locations with calculated CUFs less than 0.1 for 40 years and that did not meet other criteria of MEB 3-1 were not further evaluated for installation of pipe whip restraints and a pipe break was not postulated at those locations. Using a linear extrapolation, Class 1 piping locations with CUF > 0.067 but < 0.1 for 40 years might exceed 0.1 for 60 years. The calculations for those locations are considered as TLAAs by NRC.

Cracking due to fatigue in these locations will be managed by tracking fatigue usage for three bounding locations in the set of piping locations with 40-year CUF projections between 0.067 and 0.1 {demonstration through Criterion (iii) of 10 CFR 54.21(c)(i)}. This aging management program, "Component Cyclic or Transient Limit Program," is discussed in appendix A.1.12.

ENCLOSURE 3

EDWIN I. HATCH NUCLEAR PLANT

DOCKETS 50-321, 50-366

OPERATING LICENSES DPR-57, NPF-5

APPENDIX B

LICENSE RENEWAL DOCUMENTATION

SEPTEMBER 5, 2001

## Table of Contents

**B.1 EXISTING PROGRAMS AND ACTIVITIES ..... 1**
B.1.1 Reactor Water Chemistry Control ..... 1
B.1.2 Closed Cooling Water Chemistry Control ..... 5
B.1.3 Diesel Fuel Oil Testing ..... 8
B.1.4 Plant Service Water And RHR Service Water Chemistry Control ..... 11
B.1.5 Fuel Pool Chemistry Control ..... 14
B.1.6 Demineralized Water And Condensate Storage Tank Chemistry Control ..... 17
B.1.7 Suppression Pool Chemistry Control ..... 20
B.1.8 Corrective Actions Program ..... 23
B.1.9 Inservice Inspection Program ..... 26
B.1.10 Overhead Crane And Refueling Platform Inspections ..... 29
B.1.11 Torque Activities ..... 32
B.1.12 Component Cyclic Or Transient Limit Program ..... 35
B.1.13 Plant Service Water And RHR Service Water Inspection Program ..... 39
B.1.14 Primary Containment Leakage Rate Testing Program ..... 43
B.1.15 Boiling Water Reactor Vessel And Internals Program ..... 45
B.1.16 Wetted Cable Activities ..... 49
B.1.17 Reactor Pressure Vessel Monitoring Program ..... 51
B.1.18 Diesel Generator Maintenance Activities ..... 55

**B.2 ENHANCED PROGRAMS AND ACTIVITIES ..... 58**
B.2.1 Fire Protection Activities ..... 58
B.2.2 Flow Accelerated Corrosion Program ..... 62
B.2.3 Protective Coatings Program ..... 65
B.2.4 Equipment And Piping Insulation Monitoring Program ..... 69
B.2.5 Structural Monitoring Program ..... 71

**B.3 NEW PROGRAMS AND ACTIVITIES ..... 76**
B.3.1 Galvanic Susceptibility Inspections ..... 76
B.3.2 Treated Water Systems Piping Inspections ..... 79
B.3.3 Gas Systems Components Inspections ..... 82
B.3.4 Condensate Storage Tank Inspection ..... 84
B.3.5 Passive Components Inspection Activities ..... 86
B.3.6 RHR Heat Exchanger Augmented Inspection And Testing Program ..... 89
B.3.7 Torus Submerged Components Inspection Program ..... 92
B.3.8 Insulated Cables And Connections Aging Management Program ..... 94

## B.1 EXISTING PROGRAMS AND ACTIVITIES

The Corrective Action Program is credited for the following four attributes for all aging management activities at Plant Hatch:

- Attribute 7 - Corrective actions, including root cause determination and prevention of recurrence, are included.
- Attribute 8 - Confirmation process is included.
- Attribute 9 - Administrative controls should provide a formal review and approval process.
- Attribute 10 - Operating experience of the aging management program, including past corrective actions resulting in program enhancements or additional programs, are considered.

See Section B.1.8 for a description of how attributes 7, 8, and 9 above are met for all programs. Specific operating experience (Attribute 10) is discussed for each individual program or activity.

### B.1.1 Reactor Water Chemistry Control

Reactor Water Chemistry Control is a major part of the overall chemical control strategy for Plant Hatch. It is a mitigating activity designed to maintain structural integrity, reliability, and availability of plant systems and components by controlling fluid purity and composition.

The principal elements of Reactor Water Chemistry Control at Plant Hatch are regular sampling, results analysis and, when applicable, chemistry modification. These activities are further supported by trending, tracking and regular evaluations.

Control of reactor water chemistry is accomplished in accordance with EPRI TR-103515. Currently, reactor coolant system chemistry standards are met through the use of filtration and ion exchange operations accomplished by powdered resin condensate polishers. These condensate polishers effectively limit concentrations of suspended solids and ionic impurities within the reactor coolant. Hydrogen injection and NMCA may be utilized to further reduce the ECP of reactor water. HWC reduces the oxidizing potential of the coolant by maintaining residual dissolved hydrogen content. This excess hydrogen reacts with radiolytically produced oxygen and hydrogen peroxide, thereby limiting the concentrations of these oxidizing species in reactor water. NMCA injects noble metals such as platinum and rhodium that act as catalysts for the recombination reactions and allow effective use of lower residual dissolved hydrogen concentrations. Lower ECP values produced by implementation of HWC and NMCA have been shown to mitigate corrosion within reactor coolant systems.

**Program Scope**

*(Scope of the program includes the specific structure, component, or commodity for the identified aging effect.)*

Portions of the following systems, structures and components are directly or indirectly monitored by reactor water chemistry control:

B11 – Reactor Assembly
B21 – Nuclear Boiler
B31 – Reactor Recirculation
E41 – HPCI
E51 – RCIC
N32 – EHC
N61 – Main Condenser System

**Preventive or Mitigative Actions**

*(Preventive actions to mitigate or prevent aging degradation.)*

Components subjected to a reactor water environment are fabricated from carbon steels, low alloy steels, stainless steels, and nickel based alloys. By controlling reactor water chemistry, Plant Hatch IGSCC in reactor cooling system piping and reactor internals, IASCC within the beltline region components, and other types of corrosion throughout systems containing reactor water.

Reactor water chemistry control is directed at minimizing the oxidizing power of the reactor water. EPRI TR-103515 provides technical data linking reduced coolant-oxidizing power to a commensurate reduction in IGSCC, IASCC, and other corrosion processes.

**Parameters Inspected or Monitored**

*(Parameters inspected or monitored are linked to the degradation of the particular intended function.)*

EPRI TR-103515 provides the basis for the reactor coolant chemistry parameters monitored to ensure adequate chemistry control at Plant Hatch. These parameters include coolant conductivity, sulfate concentrations, and chloride concentrations. Currently, when HWC is in service, ECP is also monitored.

**Detection of Aging Effects**

*(The method of detection of the aging effects is described and performed in a timely manner).*

Reactor water chemistry control is a mitigative activity and as such is not intended to directly detect age-related degradation of reactor assembly and reactor coolant system components.

**Monitoring and Trending**

*(Monitoring and trending provide for timely corrective actions.)*

Reactor Water Chemistry Control does not directly monitor or trend age related degradation and as such is not credited to perform this attribute in the Plant Hatch LRA.

However, EPRI TR-103515 provides the basis for the methodology employed for trending, tracking, and regular evaluations of reactor water chemistry parameters. During normal power operations, sulfates and chlorides are monitored daily, and conductivity is continuously monitored. Currently ECP is continuously monitored when hydrogen injection is in service.

**Acceptance Criteria**

*(Acceptance criteria are included.)*

Acceptance criteria for reactor water chemistry control are based on an approved version of EPRI TR-103515. This document specifies chemistry control parameters and associated action levels, sample frequencies, and analysis methods for adequate reactor water chemistry control. Chemistry control parameters and sample frequencies specified in EPRI TR-103515 are based on plant operating conditions and the water chemistry mode currently in use (normal water chemistry without hydrogen injection or HWC).

During normal power operations, reactor coolant chemistry is maintained in accordance with the minimum reactor water control parameters (action level 1) contained within EPRI TR 103515 Rev. 2. The minimum control parameters are:

Conductivity: < 0.30 μS/cm
Chlorides: < 5 ppb
Sulfates: < 5 ppb

These parameters, and associated acceptance criteria, are applicable for both HWC and normal water chemistry operations.

Currently, ECP is continuously monitored by sensors contained within the reactor vessel drain line, whenever hydrogen injection is in service, to verify the continued effectiveness of HWC and NMCA.

**Operating Experience**

*(Operating experience of the aging management program, including past corrective actions resulting in program enhancements or additional programs, is considered.)*

EPRI TR-103515 considers historical data collected from industry and contains lessons learned from many years of operating experience, thereby assuring that past experience, including that experience gained via BWRVIP activities has been utilized to improve the program methods.

Plant Hatch has aggressively pursued improvements in aging management of in-scope components through improved chemical control methods, sampling and measurement techniques, and installation of new equipment designed to mitigate aging effects. These improvements have been based on the EPRI BWR water chemistry program outlined in EPRI TR-103515.

After encountering significant problems with IGSCC in recirculation system large bore stainless steel piping, Plant Hatch was among the first plants to install hydrogen water chemistry equipment. The HWC system was installed to reduce the ECP of the reactor coolant, thereby effectively eliminating the environmental conditions conducive to IGSCC within reactor recirculation system piping and reducing the potential for IGSCC and IASCC in susceptible reactor assembly components.

NMCA was added to Unit 1 during the 1999 refueling outage and added to Unit 2 during the 2000 refueling outage. NMCA serve to catalyze the recombination of oxygen and hydrogen peroxide with hydrogen, thereby reducing the hydrogen injection rates required to maintain acceptably low reactor coolant ECP values.

**References**

1. *Edwin I. Hatch Nuclear Plant Technical Requirements Manual, Units 1 and 2.*

2. *TR-103515, Electric Power Research Institute (EPRI), "BWR Water Chemistry Guidelines".*

3. *TR-112214, Electric Power Research Institute (EPRI), "BWR Vessel and Internals Project, Proceedings: BWRVIP Symposium, November 12-13, 1998"*

4. *TR-108705, Electric Power Research Institute (EPRI), "BWR Vessel and Internals Project, Technical Basis for Inspection Relief for BWR Internal Components with Hydrogen Injection"*

### B.1.2 Closed Cooling Water Chemistry Control

CCW chemistry control is a mitigating activity designed to maintain structural integrity, reliability, and availability of plant closed cooling water systems and components by controlling fluid purity and composition.

The principal elements of CCW chemistry control at Plant Hatch are regular sampling, results analysis and, when applicable, chemistry modification. These activities are further supported by trending, tracking and regular evaluations.

EPRI TR-107396 currently provides a basis for the methodology employed to maintain CCW system chemistry parameters within acceptable limits, ensure adequate sampling frequencies, and specify proper analysis techniques.

Control of CCW chemistry is accomplished through the use of corrosion inhibitor additions, biocide additions, and chemical additions to control pH. Concentrations of detrimental impurities are diagnostically monitored. Should CCW chemistry parameters exceed the recommendations established by EPRI, appropriate actions to minimize the potential for significantly increased corrosion rates will be accomplished in accordance with the Plant Hatch corrective actions program.

**Program Scope**

*(Scope of the program includes the specific structure, component, or commodity for the identified aging effect.)*

While CCW chemistry control is applicable to all closed cycle cooling water systems, only limited portions of CCW systems are within the scope of license renewal. Operation of these systems is not vital to the safe shutdown of the plant under normal or accident conditions. However, certain portions of these systems are in scope to maintain primary containment integrity. Portions of the following systems are included:

P42 – RBCCW
P64 – PCCW
(P64 is applicable to Unit 2 only)

**Preventive or Mitigative Actions**

*(Preventive actions to mitigate or prevent aging degradation.)*

Components subjected to a CCW environment are fabricated from carbon steels, stainless steels, and copper based alloys. By controlling chemistry in CCW systems, loss of material due to corrosion and microbiological influences may be mitigated. Corrosion inhibitors promote the formation of adherent oxide layers on system components to reduce overall corrosion rates. Biocide additions provide for control of microbe populations – thereby reducing corrosion due to the influence of biological activity.

**Parameters Inspected or Monitored**

*(Parameters inspected or monitored are linked to the degradation of the particular intended function.)*

EPRI TR-107396 provides the basis for CCW chemistry chemical additions and monitoring to ensure adequate chemistry control at Plant Hatch. This guideline provides several different treatment options and provides recommendations for applicable control parameters.

Chemical additions include, nitrite / molybdate additions to inhibit carbon steel corrosion and TTA additions to inhibit copper alloy corrosion. EPRI-recommended biocide additions are utilized to control microbe populations. Application of these biocides is based on the results of microbiological analyses and is varied to maximize the effectiveness of additions on microbiological populations while minimizing the effects on other chemical parameters.

Control parameters include pH (proper pH reduces corrosion rates and increases corrosion inhibitor effectiveness) and corrosion inhibitor concentrations. Diagnostic parameters evaluated include biocide concentrations and microbe populations; ammonia, chloride, and sulfate concentrations; and conductivity.

Additionally, RBCCW systems contain carbon steel corrosion coupons, which are analyzed periodically to verify the effectiveness of the corrosion inhibitor system.

**Detection of Aging Effects**

*(The method of detection of the aging effects is described and performed in a timely manner).*

CCW chemistry control is a mitigative activity and as such is not intended to directly detect age-related degradation of components subjected to closed cooling water.

**Monitoring and Trending**

*(Monitoring and trending provide for timely corrective actions.)*

CCW chemistry control does not directly monitor or trend age related degradation and as such is not credited to perform this attribute within the Hatch license renewal application. However, EPRI TR-107396 provides the basis for the methodology employed for trending, tracking, and regular evaluations of closed cooling water chemistry parameters at Plant Hatch. Engineering personnel assist in performing evaluations of the structural integrity of the in scope plant systems. When necessary, chemistry modification is performed.

Currently, $Na_2MoO_4$, $NaNO_2$ and pH are monitored weekly; TTA is monitored bi-weekly; sulfates, chlorides, and bacteria populations are monitored monthly; and carbon steel corrosion coupons are weighed semiannually.

## Acceptance Criteria

*(Acceptance criteria are included.)*

Acceptance criteria for CCW chemistry control are based on an approved version of EPRI TR-107396. This document specifies appropriate parameter limitations, and analysis methods for adequate CCW chemistry control.
The following acceptance criteria apply:

| | |
|---|---|
| Sulfates: | < 10 ppm |
| Chlorides: | < 10 ppm |
| pH: | 8.8 – 10.0 |
| $Na_2MoO_4$ | 300 < X < 500 ppm |
| $NaNO_2$ | 300 < X < 500 ppm |
| TTA | > 25 ppm |

In addition to the specific acceptance criteria shown above bacteria populations are monitored monthly to validate the effectiveness of biocide additions and provide a basis for ongoing additions of two biocides; glutaraldehyde and isothiazolone.

Finally, carbon steel corrosion coupons are weighed on a semiannual basis to ensure that corrosion rates occurring within CCW systems is not significant. EPRI TR-107396 target values for carbon steel coupons are less than 0.2 mpy for an excellent rating and less than 0.5 mpy for a good rating.

## Operating Experience

*(Operating experience of the aging management program, including past corrective actions resulting in program enhancements or additional programs, is considered.)*

EPRI TR-107396 considers historical data collected from industry and contains lessons learned from many years of operating experience, thereby assuring that past experience has been utilized to improve the program methods.

The CCW chemistry approach has been improved through lessons learned during operation at Plant Hatch. Corrosion inhibitor systems and biocide additions have been modified based on various past problems and industry data to improve CCW system chemistry stability.

## References

1. *TR-107396, EPRI Closed Cooling Water Chemistry Guidelines*

2. *CY 3973, Problems Observed in Closed Cooling Water System Chemistry Control and Monitoring Practices During INPO Evaluations*

3. *Edwin I. Hatch Nuclear Plant Final Safety Analysis Report, Unit 2*

### B.1.3 Diesel Fuel Oil Testing

Fuel oils in their pure form are non-aggressive and non-corrosive for all metals. However, water in fuel oil, naturally occurring contaminants, and fuel oil additives can produce a corrosive environment.

Plant Hatch diesel fuel oil testing includes activities designed to prevent or mitigate loss of material from diesel fuel oil storage and transfer components due to intrusion of water or other contaminants.

**Program Scope**

*(Scope of the program includes the specific structure, component, or commodity for the identified aging effect.)*

The Plant Hatch Diesel Fuel Oil Testing Program applies to the emergency diesel generator fuel oil storage tanks, the diesel generator fuel oil day tanks, and the associated transfer piping and components. It additionally covers the in-scope fire pump diesel fuel oil storage tanks and the associated piping and components. The following systems are within the scope of diesel fuel oil testing.

Y52 – Fuel Oil
X43 – Fire Protection

**Preventive or Mitigative Actions**

*(Preventive actions to mitigate or prevent aging degradation.)*

The Plant Hatch Diesel Fuel Oil Testing Program activities provide for detection of water or other contaminants before loss of material can impact component function. Program elements include not only sampling and analysis of new fuel, but periodic sampling and analysis of fuel oil in storage and day tanks.

To prevent introduction of contaminated oil into Plant Hatch systems, new oil delivered in trucks is sampled before off loading. New fuel that does not pass a clear and bright test is analyzed for water and sediment prior to acceptance. Biocide is added during the off loading. The addition of a biocide, when properly controlled, minimizes the potential for microorganism growth and the potential for microbiologically influenced corrosion.

**Parameters Inspected or Monitored**

*(Parameters inspected or monitored are linked to the degradation of the particular intended function.)*

Stored fuel oil is sampled for water content and total particulate. Minimization of these contaminants will prevent excessive corrosion within fuel oil systems.

**Detection of Aging Effects**

*(The method of detection of the aging effects is described and performed in a timely manner).*

Diesel fuel oil testing is a mitigative activity and as such is not intended to directly detect age-related degradation of diesel fuel oil supply system components.

**Monitoring and Trending**

*(Monitoring and trending provide for timely corrective actions.)*

Diesel fuel oil testing does not directly monitor or trend age related degradation and as such is not credited to perform this attribute within the Hatch license renewal application. Maintaining fuel oil quality is sufficient to provide adequate aging management for associated tanks and other system components.

Acceptability of new fuel oil is determined by sampling and analysis prior to addition to the storage tanks to ensure that the fuel oil was not contaminated with other products in transit.

Stored fuel oil total particulate concentration is sampled once per quarter. This includes the EDG storage tanks and fire pump storage tanks.

Stored fuel oil water and sediment concentration is monitored both quarterly and semiannually as described under acceptance criteria.

**Acceptance Criteria**

*(Acceptance criteria are included.)*

The acceptance criteria for water and sediment content of new fuel oil shipments is < 0.05% by volume, if testing is required.

For EDG storage tanks, EDG day tanks, and fire pump diesel fuel oil storage tanks, the following acceptance criteria apply:

- As required by Technical Specification 5.5.9.b and Fire Hazards Analysis, Appendix B, SR 2.3.2.b, total particulate within stored fuel oil is 10mg/l or less.
- A three level composite sample from the EDG storage tank for water and sediment content is 0.05% or less by volume (monitored quarterly).
- A middle sample from the fire pump diesel fuel oil storage tanks for water and sediment content is 0.05% or less by volume (monitored quarterly).
- A bottom sample content from the EDG storage tanks, EDG day tanks, and fire pump diesel fuel oil storage tanks for water and sediment is 0.1% or less by volume (monitored semiannually).

## Operating Experience

*(Operating experience of the aging management program, including past corrective actions resulting in program enhancements or additional programs, is considered.)*

A review of plant deficiency cards submitted over the past 5 years showed that several deficiencies were written on the applicable systems. These deficiencies were screened to determine which ones might be potentially age-related. Deficiencies related to the diesel fuel oil supply systems were limited to instances of unacceptable sediment and water levels within the EDG storage tanks and fire diesel fuel oil storage tanks. Acceptable levels were restored promptly through the corrective actions program. No instances of component failure due to age related degradation were identified.

## References

1. *Edwin I. Hatch Nuclear Plant Technical Specifications, Units 1 and 2.*

2. *Edwin I. Hatch Nuclear Plant, Units 1 and 2 Fire Hazards Analysis and Fire Protection Program.*

### B.1.4 Plant Service Water And RHR Service Water Chemistry Control

PSW and RHRSW chemical control activities are intended to reduce service water system corrosion rates and minimize biofouling of system components through a biocide application program using sodium hypochlorite alone or in conjunction with sodium bromide. The operation of the program is controlled by plant procedures.

**Program Scope**

*(Scope of the program includes the specific structure, component, or commodity for the identified aging effect.)*

Service water chlorination and bromination mitigate aging within the following systems:

E11 – RHRSW
P41 – PSW
T41 - Reactor Building HVAC
W33 - Traveling Water Screens/Trash Racks
Z41 - Control Building HVAC

**Preventive or Mitigative Actions**

*(Preventive actions to mitigate or prevent aging degradation.)*

Sodium hypochlorite alone or in conjunction with sodium bromide is periodically added to PSW systems to control biological growth in the service water systems. Additionally, this program is coordinated with the periodic operation of RHRSW to maximize chemical treatment in this system since it is not continuously operated. Program feed rates, chemical concentrations, and duration are designed to ensure biological activity is minimized within the service water system components.

**Parameters Inspected or Monitored**

*(Parameters inspected or monitored are linked to the degradation of the particular intended function.)*

During plant PSW system chlorination and bromination, free available oxidant concentration is periodically monitored at the PSW discharge to the circulating water flume to ensure program efficacy. The Plant Hatch NPDES Permit requires weekly monitoring of plant effluent to the Altamaha River for residual oxidant.

**Detection of Aging Effects**

*(The method of detection of the aging effects is described and performed in a timely manner).*

PSW and RHRSW chemistry control is a mitigative activity and as such is not intended to directly detect age-related degradation of PSW and RHRSW system components.

**Monitoring and Trending**

*(Monitoring and trending provide for timely corrective actions.)*

Chemical additions to the PSW and RHRSW systems do not directly monitor or trend age related degradation and as such are not credited to perform this attribute within the Plant Hatch LRA. However, the chemical additions under consideration are monitored routinely as described below:

Normally, the PSW system is chlorinated and/or brominated five times per week for a duration of 6 to 12 hours. FAO is monitored during the treatment cycle. This sample provides a reasonable assurance that sufficient biocide is being added to meet the system chlorine demand and result in an effective residual free available oxidant concentration. Sample results also provide indication that the program is operated consistent with the requirements and limitations of the Plant Hatch NPDES permit.

The Plant Hatch NPDES Permit requires weekly monitoring of the final plant effluent to the Altamaha River for residual oxidant. This data is reported quarterly.

**Acceptance Criteria**

*(Acceptance criteria are included.)*

During chlorination and bromination, plant service water effluent samples should indicate a resultant free available oxidant concentration exceeding 0.2 ppm, but generally less than 0.5 ppm, as measured at the PSW system discharge to the circulation water flume.

In accordance with the Plant Hatch NPDES Permit, the final plant effluent to the Altamaha River is sampled weekly. If the sample results indicate the presence of any residual oxidant, the sample is repeated every fifteen minutes until no residual oxidant is detected. These sample results are reported to the State of Georgia Department of Natural Resources on a quarterly basis.

**Operating Experience**

*(Operating experience of the aging management program, including past corrective actions resulting in program enhancements or additional programs, is considered.)*

Plant Hatch has experienced biofouling problems with algae and has found evidence of the Asiatic clam. Algae are believed to be a primary cause of blockage within cooling tower fill bundles and fouling of cooling tower screens. Asiatic clams have been found in the intake structure and circulating water flumes. While these organisms have not yet resulted in significant problems within service water systems, the potential for significant biological fouling does exist in the absence of service water system biocide additions.

Current implementation of service water system chlorination and bromination is consistent with the recommendations of Generic Letter 89-13 regarding chlorination of service water systems and incorporates industry guidance, vendor recommendations, and plant specific experience. Chemical selection and application techniques are periodically evaluated and adapted to optimize control of biofouling while maintaining

discharges to the Altamaha River within the limitations specified by the Plant Hatch NPDES permit.

**References**

1. *Plant Hatch Environmental Protection Plan, Units 1 and 2.*

2. *Generic Letter 89-13 with Supplement 1 "Service Water System Problems Affecting Safety-Related Equipment," 1990.*

3. *State of GA Department of Natural Resources Environmental Protection Division Permit No. GA0004120, "Plant Hatch NPDES Permit", Effective September 15, 1997.*

### B.1.5 Fuel Pool Chemistry Control

Fuel pool chemical control is a mitigating activity designed to maintain structural integrity, reliability, and availability of plant systems and components by controlling fluid purity and composition.

The principal elements of fuel pool chemical control at Plant Hatch are regular sampling, results analysis and, when applicable, chemistry modification.

EPRI document TR-103515 "BWR Water Chemistry Guidelines" currently provides the basis for the methodology employed to maintain fuel pool chemistry parameters within acceptable limits, ensure adequate sampling frequencies, and specify proper analysis techniques.

Control of fuel pool chemistry is presently maintained through the use of filtration and ion exchange operations accomplished by filter/demineralizers. This process limits concentrations of suspended solids and ionic impurities within the fuel pool. Should fuel pool water chemistry parameters exceed the limitations established by EPRI, appropriate actions will be taken to minimize the potential for significantly increased corrosion rates and restore fuel pool purity.

**Program Scope**

*(Scope of the program includes the specific structure, component, or commodity for the identified aging effect.)*

The Plant Hatch fuel pool chemical control activities are applicable to in-scope stainless steel and aluminum components exposed to the spent fuel pool water environment. These components include the stainless steel liners for the spent fuel pool, spent fuel pool plugs, spent fuel pool gate, and the refueling canal. Other stainless steel components within the scope of license renewal includes the spent fuel pool storage racks, miscellaneous steel inside the spent fuel pool, and the leak chase system. Aluminum components within the scope of license renewal include the seismic restraints for the spent fuel storage racks and the countersunk head screws for fuel/control rod handling. All of these components and structures are part of T24 (Fuel Storage).

**Preventive or Mitigative Actions**

*(Preventive actions to mitigate or prevent aging degradation.)*

Fuel pool and associated internal structures are primarily fabricated from stainless steels and aluminum alloys. Chemistry control is focused upon minimizing detrimental ionic species and conductivity. By controlling water chemistry in the fuel pool, Plant Hatch reduces the potential for significant corrosion of plant systems and components exposed to a fuel pool environment.

**Parameters Inspected or Monitored**

*(Parameters inspected or monitored are linked to the degradation of the particular intended function.)*

EPRI TR-103515 provides the basis for fuel pool chemistry parameters monitored to ensure adequate chemistry control at Plant Hatch. Fuel pool chemistry diagnostic parameters regularly monitored include conductivity, chloride and sulfate concentrations, and total organic carbon levels. Control of these parameters will reduce the potential for significant corrosion. In addition, fuel pool pH and filterable solids concentration are diagnostically monitored.

**Detection of Aging Effects**

*(The method of detection of the aging effects is described and performed in a timely manner).*

Fuel pool chemistry control is a mitigative activity and as such is not intended to directly detect age-related degradation of the fuel pool and associated internal structures.

**Monitoring and Trending**

*(Monitoring and trending provide for timely corrective actions.)*

Fuel pool chemistry control does not directly monitor or trend age related degradation and as such is not credited to perform this attribute within the Hatch license renewal application.

However, EPRI TR-103515 provides the basis for the methodology employed for periodic monitoring of fuel pool chemistry parameters at Plant Hatch. Sulfates, chlorides, conductivity, and total organic carbon are monitored weekly per EPRI TR-103515. In addition, fuel pool pH and filterable solids content is also regularly monitored.

**Acceptance Criteria**

*(Acceptance criteria are included.)*

EPRI TR-103515 provides diagnostic parameters and associated limitations for fuel pool chemistry analyses. Specific acceptance criteria included within EPRI TR-103515 are as follows:

| | |
|---|---|
| Sulfates | < 100 ppb |
| Chlorides | < 100 ppb |
| Conductivity | < 2 μS/cm |
| Total Organic Carbon | < 400 ppb |

In addition to the EPRI requirements shown above, pH and filterable solids are diagnostically monitored.

## Operating Experience

*(Operating experience of the aging management program, including past corrective actions resulting in program enhancements or additional programs, is considered.)*

A review of plant deficiency cards submitted over the past 5 years showed that no age related deficiencies have been written on the fuel pool or associated internal structures.

EPRI TR-103515 guidelines for auxiliary systems incorporate the input of industry experts and utility experience. Therefore, operation according to the guidelines specified by EPRI TR-103515 ensures that pertinent industry issues were considered.

Finally, fuel pool chemistry excursions have been rare in the past. In the past five years, only minor excursions above the criteria specified within EPRI TR-103515 have occurred. None of these excursions were determined to be significant.

## References

1. *TR-103515, Electric Power Research Institute (EPRI), "BWR Water Chemistry Guidelines".*

### B.1.6 Demineralized Water And Condensate Storage Tank Chemistry Control

Demineralized water chemical control is a mitigating activity designed to maintain structural integrity, reliability, and availability of plant systems and components by controlling fluid purity and composition.

The principal elements of demineralized water chemical control at Plant Hatch are regular sampling, results analysis and, when applicable, chemistry modification.

EPRI document TR-103515 "BWR Water Chemistry Guidelines" currently provides the basis for the methodology employed to maintain DWST and CST chemistry parameters within acceptable limits, ensure adequate sampling frequencies, and specify proper analysis techniques.

Demineralized water is supplied to both the DWST and CST via the Plant Hatch makeup demineralizer system. This system provides demineralized water to meet tank chemistry limitations through the use of filtration, ion exchange and degasification processes.

Control of demineralized water chemistry parameters, within the CST and DWST, is not maintained by any type of control system, such as ion exchange or filtration. Should demineralized water chemistry parameters exceed the limitations established by EPRI, appropriate corrective actions will be taken to minimize the potential for significantly increased corrosion rates and restore demineralized water purity.

**Program Scope**

*(Scope of the program includes the specific structure, component, or commodity for the identified aging effect.)*

Portions of the following systems are directly or indirectly monitored by demineralized water chemistry control.

B21 – Nuclear Boiler
C11 – CRD
E41 – HPCI
E51 – RCIC
P11 – Condensate Transfer and Storage
R43 – EDG
T23 – Primary Containment

Note that while the demineralized water system proper (P21) is not within the scope of license renewal, several systems and components that receive makeup water from the DWST are within the scope of license renewal. Thus, DWST chemistry control is an important aspect of aging management for the systems listed above.

**Preventive or Mitigative Actions**

*(Preventive actions to mitigate or prevent aging degradation.)*

Components exposed to a demineralized water environment are primarily fabricated from carbon steels, stainless steels, and aluminum alloys. Chemistry control is focused upon minimizing detrimental ionic species and conductivity. By controlling water chemistry in the CST and DWST, Plant Hatch reduces the potential for significant corrosion of plant systems and components exposed to a demineralized water environment.

**Parameters Inspected or Monitored**

*(Parameters inspected or monitored are linked to the degradation of the particular intended function.)*

EPRI TR-103515 provides the basis for demineralized water chemistry parameters monitored to ensure adequate chemistry control at Plant Hatch. Demineralized water chemistry diagnostic parameters regularly monitored include conductivity, chloride and sulfate concentrations, total organic carbon, and silica content. Control of these parameters will reduce the potential for significant corrosion. In addition, DWST and CST conductivity and pH are diagnostically monitored.

**Detection of Aging Effects**

*(The method of detection of the aging effects is described and performed in a timely manner).*

Demineralized water chemistry control is a mitigative activity and as such is not intended to directly detect age-related degradation of systems and components exposed to a demineralized water environment.

**Monitoring and Trending**

*(Monitoring and trending provide for timely corrective actions.)*

Demineralized water chemistry control does not directly monitor or trend age related degradation and as such is not credited to perform this attribute within the Hatch license renewal application. However, EPRI TR-103515 provides the basis for the methodology employed for periodic monitoring of demineralized water chemistry parameters at Plant Hatch. Chlorides, sulfates, total organic carbon, and silica are monitored weekly in accordance with EPRI TR-103515 recommendations. In addition, conductivity and pH are diagnostically monitored.

**Acceptance Criteria**

*(Acceptance criteria are included.)*

EPRI TR-103515 provides diagnostic parameters and associated limitations for DWST and CST chemistry analyses. The specific acceptance criteria included within EPRI TR-103515 are as follows:

| | |
|---|---|
| Sulfates | < 10 ppb |
| Chlorides | < 10 ppb |
| Total Organic Carbon | < 200 ppb |
| Silica | < 100 ppb |

In addition to the EPRI requirements shown above, pH and conductivity are diagnostically monitored.

**Operating Experience**

*(Operating experience of the aging management program, including past corrective actions resulting in program enhancements or additional programs, is considered.)*

A review of plant deficiency cards submitted over the past 5 years showed that no age related deficiencies were noted due to significant corrosion of system components.

EPRI TR-103515 guidelines for auxiliary systems incorporate the input of industry experts and utility experience. Therefore, operation according to the guidelines specified by EPRI TR-103515 ensures that pertinent industry issues were considered.

Finally, CST and DWST chemistry excursions have been rare in the past. In the past five years, only minor excursions above the criteria specified within EPRI TR-103515 have occurred. None of these excursions were determined to be significant.

**References**

1. *TR-103515, Electric Power Research Institute (EPRI), "BWR Water Chemistry Guidelines".*

### B.1.7 Suppression Pool Chemistry Control

Suppression pool chemical control is a mitigating activity designed to maintain structural integrity, reliability, and availability of plant systems and components by controlling fluid purity and composition.

The principal elements of suppression pool chemical control at Plant Hatch are regular sampling, results analysis and, when applicable, chemistry modification.

EPRI document TR-103515 "BWR Water Chemistry Guidelines" currently provides the basis for the methodology employed to maintain suppression pool chemistry parameters within acceptable limits, assure adequate sampling frequencies, and specify proper analysis techniques.

Control of suppression pool chemistry parameters is not maintained by any type of control system, such as ion exchange or filtration. Should suppression pool chemistry parameters exceed the limitations established by EPRI, appropriate corrective actions will be taken to minimize the potential for significantly increased corrosion rates and restore suppression pool purity.

**Program Scope**

*(Scope of the program includes the specific structure, component, or commodity for the identified aging effect.)*

Portions of the following systems, structures and components are directly or indirectly monitored by suppression pool chemistry control:

B21 – Nuclear Boiler (SRV tailpipes and associated supports)
E11 – RHR
E21 – Core Spray
E41 – HPCI
E51 – RCIC
T23 – Primary Containment (including the torus)
T48 – Primary Containment Purge and Inerting

Also included are the suppression chamber vent headers, deflectors, internal supports, downcomers and braces, and interior platform supports.

**Preventive or Mitigative Actions**

*(Preventive actions to mitigate or prevent aging degradation.)*

Components subjected to a suppression pool environment are primarily fabricated from carbon steels and stainless steels. Chemistry control is focused upon minimizing detrimental ionic species and conductivity. By controlling water chemistry in the suppression pool, Plant Hatch reduces the potential for significant corrosion of plant systems and components exposed to a suppression pool environment.

**Parameters Inspected or Monitored**

*(Parameters inspected or monitored are linked to the degradation of the particular intended function.)*

EPRI TR-103515 provides the basis for suppression pool chemistry parameters monitored to ensure adequate chemistry control at Plant Hatch. Suppression pool chemistry diagnostic parameters regularly monitored include conductivity (zinc corrected), chloride and sulfate concentrations, and total organic carbon levels. Monitoring of these parameters will reduce the potential for significant corrosion.

**Detection of Aging Effects**

*(The method of detection of the aging effects is described and performed in a timely manner).*

Suppression pool chemistry control is a mitigative activity and as such is not intended to directly detect age-related degradation of components exposed to a suppression pool environment.

**Monitoring and Trending**

*(Monitoring and trending provide for timely corrective actions.)*

Suppression pool chemistry control does not directly monitor or trend age related degradation and as such is not credited to perform this attribute within the Hatch license renewal application.

However, EPRI TR-103515 provides the basis for the methodology employed for trending, tracking, and regular evaluations of suppression pool water chemistry parameters at Plant Hatch. Sulfates, chlorides, zinc corrected conductivity, and total organic carbon are monitored quarterly in accordance with EPRI TR-103515 recommendations.

**Acceptance Criteria**

*(Acceptance criteria are included.)*

EPRI TR-103515 provides diagnostic parameters and associated limitations for suppression pool chemistry analyses. The specific acceptance criteria included within EPRI TR-103515 are as follows:

| | |
|---|---|
| Sulfates | <200 ppb |
| Chlorides | <200 ppb |
| Conductivity | <5.0 μS/cm |
| Total organic carbon | <1000 ppb |

In addition, zinc concentration is monitored quarterly since dissolution of the torus inorganic zinc coating can contribute to zinc content within the suppression pool and thereby contribute to pool conductivity.

**Operating Experience**

*(Operating experience of the aging management program, including past corrective actions resulting in program enhancements or additional programs, is considered.)*

A review of plant deficiency cards submitted over the past 5 years showed that no age related deficiencies have been written on the structures or components within the scope of license renewal for which suppression pool chemical control is credited.

EPRI TR-103515 guidelines for auxiliary systems incorporate the input of industry experts and utility experience. Therefore, operation according to the guidelines specified by EPRI TR-103515 ensures that pertinent industry issues were considered.

Finally, suppression pool chemistry excursions have been rare in the past. In the past five years, only minor excursions above the criteria specified within EPRI TR-103515 have occurred. None of these excursions was determined to be significant.

**References**

1. *TR-103515, Electric Power Research Institute (EPRI), "BWR Water Chemistry Guidelines".*

### B.1.8 Corrective Actions Program

SNC has established and implemented a QA Program for Plant Hatch that conforms to the criteria set forth in 10 CFR 50, Appendix B, "Quality Assurance Criteria for Nuclear Power Plants and Fuel Reprocessing Plants". The QA Program addresses all aspects of quality assurance at Plant Hatch.

The two elements of the Plant Hatch QA Program that are most pertinent to the aging management programs credited for license renewal are corrective actions and administrative controls. These elements are discussed in Chapter 17 of the Plant Hatch Unit 2 Final Safety Analysis Report (FSAR), and outlined below. Corrective action and administrative control requirements apply to all components within the scope of license renewal.

**Program Scope**

*(Scope of the program includes the specific structure, component, or commodity for the identified aging effect.)*

The plant condition reporting process applies to all plant systems and components within the scope of license renewal. Administrative controls are in place for existing aging management programs and activities and for the currently required portions of enhanced programs and activities. Administrative controls will also be applied to new programs and activities as they are implemented. As a minimum, these programs and activities are or will be performed in accordance with written procedures. Those procedures are or will be reviewed and approved in accordance with Plant Hatch's 10 CFR 50, Appendix B, QA Program.

**Preventive or Mitigative Actions**

*(Preventive actions to mitigate or prevent aging degradation.)*

The Corrective Action Program provides a means to correct conditions identified as being adverse to quality. There are no preventive or mitigative attributes specifically credited for this program.

**Parameters Inspected or Monitored**

*(Parameters inspected or monitored are linked to the degradation of the particular intended function.)*

No specific parameters are inspected or monitored as part of this program. Generally, when parameters inspected or monitored by other plant programs indicate a condition adverse to quality, the Corrective Action Program provides a means to correct the identified condition.

**Detection of Aging Effects**

*(The method of detection of the aging effects is described and performed in a timely manner).*

Detecting aging effects is not part of the Corrective Action Program. The Corrective Action Program provides a means to address the aging effects identified by other aging management activities.

**Monitoring and Trending**

*(Monitoring and trending provide for timely corrective actions.)*

The corrective action process is monitored and trended to ensure that corrective actions taken are adequate and timely. Significant and non-significant conditions are trended. Plant Hatch monitors significant conditions that are adverse to quality (significant occurrence reports) and requires a formal cause determination and corrective actions to prevent recurrence. In April 2000, Plant Hatch NS&C group began evaluating the effectiveness of the corrective action program against commonly used industry performance indicators.

**Acceptance Criteria**

*(Acceptance criteria are included.)*

The Corrective Action Program does not include specific acceptance criteria for in scope components. Generally, when the acceptance criteria of other aging management activities are not met, the Corrective Action Program provides a means to ensure appropriate corrective actions are taken.

**Corrective Actions**

*(Corrective actions, including root cause determination and prevention of recurrence, should be timely.)*

Corrective action is initiated following the determination of conditions adverse to quality, and documented as required by appropriate procedures. Various processes are used to identify problems requiring corrective action. The primary vehicle for initiating corrective action at Plant Hatch is the condition reporting process described in subsection 17.2.15 of the Unit 2 FSAR.

The various components of corrective action provide for timely corrective actions, including root cause determination and prevention of recurrence. The QA program provides control over activities affecting the quality of systems, structures and components consistent with their importance to safety.

In accordance with plant procedures, condition reports are analyzed for adverse trends. Any identified adverse trends are reported to the appropriate department for corrective action.

### Confirmation Process

*(Confirmation process should ensure that preventive actions are adequate and that appropriate corrective actions have been completed and are effective.)*

As described in Unit 2 FSAR in subsection 17.2.15: Condition reports are reviewed to determine the regulatory reportability and significance by NS&C. Those items determined to be significant conditions adverse to quality (significant occurrence reports) are also reviewed by the Plant Review Board. Corrective actions taken for significant items are reviewed by NS&C supervision for assurance that appropriate action has been taken.

### Administrative Controls

*(Administrative controls should provide a formal review and approval process.)*

Activities affecting quality are prescribed by documented instructions, procedures, or drawings of a type appropriate to the circumstances and are accomplished in accordance with these instructions, procedures, or drawings. They contain appropriate acceptance criteria and documentation requirements for determining whether important activities have been satisfactorily accomplished. Site procedures establish review and approval requirements.

### Operating Experience

*(Operating experience of the aging management program, including past corrective actions resulting in program enhancements or additional programs, is considered.)*

The Corrective Actions Program provides for evaluation of aging effects and significant operating events and requires that reasonable actions be taken to enhance programs and activities to prevent future occurrences.

Review of the "Operating Experience" section for the other aging management programs described in Appendix B provides numerous examples of the Corrective Action Program being used to address and correct aging related conditions adverse to quality.

The results of Corrective Action Program audits since 1995 were reviewed. The review determined that findings from the Corrective Action Program audits have resulted in enhancements to the Corrective Action Program.

### References

1. *Edwin I. Hatch Nuclear Plant Final Safety Analysis Report, Unit 2.*

### B.1.9 Inservice Inspection Program

The ISI Program is a condition monitoring program that provides for the implementation of ASME Section XI in accordance with the provisions of 10 CFR 50.55a. The ISI Program also includes augmented examinations required to satisfy commitments made by SNC (e.g., GL-88-01, NUREG-0619). The 10-year examination plan provides a systematic guide for performing nondestructive examinations of passive components in the scope of license renewal.

Plant Hatch has two units with different dates for construction permit and operating licenses. However, Unit 2's first 10-year interval was closed out early (1986) so Units 1 and 2 would be committed to the same version of Section XI. Accordingly, Plant Hatch is currently in the third 10-year interval. The period of extended operation will include the fifth and sixth inservice inspection intervals.

**Program Scope**

*(Scope of the program includes the specific structure, component, or commodity for the identified aging effect.)*

The ISI Program contains examination requirements and acceptance criteria for Class 1, 2, 3 (equivalent), and Class MC pressure boundary components, as well as the associated supports. It also provides for repair, replacement and modification activities.

The ISI Program is credited for monitoring potential age-related degradation in portions of the following systems:

B11 – Reactor Assembly
B21—Nuclear Boiler
B31 – Reactor Recirculation
E11 – RHR and RHRSW
P41 – PSW
T23 – Primary Containment
T52 – Containment Penetrations

**Preventive or Mitigative Actions**

*(Preventive actions to mitigate or prevent aging degradation.)*

The ISI Program is a condition monitoring program. As such, there are no preventive or mitigative attributes associated with this program.

**Parameters Inspected or Monitored**

(Parameters inspected or monitored are linked to the degradation of the particular intended function.)

The ISI Program utilizes visual, surface and volumetric examinations to detect loss of material, cracking, and loss of preload.

**Detection of Aging Effects**

*(The method of detection of the aging effects is described and performed in a timely manner).*

Three types of inspection methods are used for inservice examination at Plant Hatch. They are visual inspections, surface inspections, and volumetric inspections.

Visual inspections are performed as defined in IWA-2210. The three types of visual examinations used are designated VT-1, VT-2, and VT-3. VT-1 inspections are used to determine the condition of the part, component, or surface examined, including cracks, wear, corrosion, erosion, or physical damage. VT-2 inspections are used to locate evidence of leakage from pressure retaining components during a system pressure test. VT-3 inspections are used to determine the general mechanical and structural condition of components and the associated supports such as verification of clearances, physical displacements, and loose or missing parts. This includes inspection for debris, corrosion, wear, erosion, or loss of integrity at bolted or welded connections.

Surface examinations are performed as defined in IWA-2220 to determine whether surface cracks or discontinuities exist. Acceptable examination methods include liquid penetrant and magnetic particle examinations.

Volumetric examinations are performed as defined in IWA-2230 to locate discontinuities throughout the volume of material. These examinations may be conducted from the inside or outside surface of a component. Either RT or UT methods may be used.

ASME Section XI, Subsections IWB, IWC, IWD, and IWE provide examination requirements for ASME Class 1, 2, 3 (and equivalent) and Class MC components respectively. ASME Section XI, Subsection IWF addresses component supports, which are treated the same as the code class component they support. Code Case N-491 is an accepted alternative to the tables and scope expansion requirements of ASME Section XI, Subsection IWF.

**Monitoring and Trending**

*(Monitoring and trending provide for timely corrective actions.)*

Deficiencies discovered during the performance of the program activities are documented in accordance with the procedures implementing the Plant Hatch ISI program. Deficiencies discovered through the ISI program are monitored in accordance with ASME Code requirements. Deficiencies requiring repair or replacement are entered into the plant corrective action program.

**Acceptance Criteria**

*(Acceptance criteria are included.)*

Components not meeting the acceptance criteria defined in ASME Section XI, Tables IWB-2500-1, IWC-2500-1, and IWD-2500-1 are evaluated, repaired or replaced prior to returning to service.

In 1996, Plant Hatch submitted a request for relief from meeting the requirements of the ASME Code for Class MC component repairs and replacement until September 9, 1997. The NRC approved the request for relief in May 1997. Accordingly, repairs, replacements or modifications for Class MC components that occurred after September 9, 1997 have been performed in accordance with the requirements of the ASME XI Code, 1992 Edition with 1992 Addenda.

**Operating Experience**

*(Operating experience of the aging management program, including past corrective actions resulting in program enhancements or additional programs, is considered.)*

The Plant Hatch ISI Program is based upon the requirements of ASME Code. The ASME Code development process includes extensive review and approval of industry experts, thereby assuring that any significant industry data has been considered in development of the ASME Code which forms the basis for the Plant Hatch ISI Program. In addition, the Commission's process of reviewing Editions and Addenda of the ASME Code and incorporating them into10 CFR 50.55a provides additional assurance that all significant issues have been considered.

**References**

1. *ASME Boiler and Pressure Vessel Code.*

## B.1.10 Overhead Crane And Refueling Platform Inspections

SNC identified the reactor building overhead crane and the refueling platform as active components for license renewal. However, SNC evaluated the passive structural elements of the crane and refueling platform in respect to their structural integrity. The aging management review for passive structural elements identified one aging effect, loss of material due to corrosion, as requiring management. Periodic visual inspections are conducted to monitor the condition of these components that are within the scope of license renewal.

The crane and refueling platform inspection program is an existing program that evaluates aspects of the crane and refueling platform that are broader than managing the single aging effect identified for license renewal. It also satisfies the requirements of the Unit 1 Technical Requirements Manual which requires surveillance testing of the 5-ton hoist, and the crane/hoist used for handling fuel assemblies or control rods. The original LRA Appendix A, Section A.1.10, described this entire program. This discussion will, when appropriate, acknowledge the instances where portions of the program not being credited for license renewal are included in Appendix A but will not elaborate on those aspects of the program.

### Program Scope

*(Scope of the program includes the specific structure, component, or commodity for the identified aging effect.)*

Certain long-lived passive elements in the following systems or structures are monitored for loss of material that might occur due to age related degradation:

F15 –Fuel and Control Rod Handling Equipment
T29 –Reactor Building, General
T31 –Refueling Floor Cranes and Hoists

### Preventive or Mitigative Actions

*(Preventive actions to mitigate or prevent aging degradation.)*

There are no specific actions credited in the license renewal application as preventing or mitigating loss of material from passive load bearing components. Rather, these components are subjected to regular inspection as shown below.

### Parameters Inspected or Monitored

*(Parameters inspected or monitored are linked to the degradation of the particular intended function.)*

The contacting surfaces of the steel rails and the passive structural elements are periodically inspected in accordance with plant procedures. These inspections should continue to be adequate to detect loss of material from those surfaces during the extended period of operation.

Additional inspection activities not credited for license renewal aging management include a pre-operational static inspection, pre-operational dynamic inspection, operational inspection, maintenance inspection, and as required inspections. The overhead crane and refueling platform hoist, rigging, slings and lifting devices are visually inspected. A trial lift of the spent fuel pool gate or an equivalent weight is also performed for each device performing this lifting function. When cranes are in service, or prior to using standby cranes, detailed visual inspection of all wire rope is made to check for, among other things, general corrosion, kinks, and strand displacement. Hooks are visually inspected for cracks or distortion. Connections are checked for weld cracks and loose or missing bolts. Bridges, bridge rails, trolley and trolley rails are visually inspected for straightness and evidence of physical damage or cracking.

**Detection of Aging Effects**

*(The method of detection of the aging effects is described and performed in a timely manner).*

General visual inspections are performed monthly. Visual inspections are performed annually. Further, overhead cranes are visually inspected daily when in use. In addition, although not credited for license renewal, annual magnetic particle tests are performed on hooks.

**Monitoring and Trending**

*(Monitoring and trending provide for timely corrective actions.)*

Plant procedures require that deficiencies discovered during the visual inspections be documented in accordance with the condition reporting process. The Plant Hatch corrective actions program trends significant deficiencies and ensures that proper corrective actions are accomplished.

**Acceptance Criteria**

*(Acceptance criteria are included.)*

Credited For License Renewal Aging Management

Bridges, bridge rails, trolley and trolley rails must be without evidence of physical damage due to loss of material.

Not Credited For License Renewal Aging Management

Bridges, bridge rails, trolley and trolley rails must be straight, and without evidence of physical damage such as cracking.

End connections must not be severely corroded, cracked, bent, worn or improperly applied. Wire rope must be within the maximum reduction from nominal as stated in plant procedures. Wire rope safety factors from ANSI B30.5 or SAE J959-1966 are applied to acceptance criteria. Any weld cracking requires performance of nondestructive testing. Loose bolts are replaced rather than tightened.

Plant Hatch overhead crane and refueling platform inspection procedures were developed using ANSI B30.2.0-1976 and NUREG-0612. Inspection procedures for fuel handling equipment were developed using ANSI B30.9-1971, ANSI/ASME B30.10-1982, ANSI N14.6-1978 and NUREG-0612.

**Operating Experience**

*(Operating experience of the aging management program, including past corrective actions resulting in program enhancements or additional programs, is considered.)*

A review of plant deficiency cards submitted over the past 5 years did not reveal any instances of age related loss of material from the in-scope elements of the overhead crane or the refueling platform. Operating experience for the reactor building overhead cranes and refueling platform indicates that annual preventive maintenance and inspections, visual inspections required prior to use, and required testing have maintained the cranes in acceptable operating condition.

**References**

1. *Edwin I. Hatch Nuclear Plant, Unit 2 Final Safety Analysis Report*

## B.1.11 Torque Activities

Torque activities mitigate loss of preload through use of proper torque techniques at Plant Hatch. Plant procedures provide specific instructions for maximizing the effectiveness of torque activities.

**Program Scope**

*(Scope of the program includes the specific structure, component, or commodity for the identified aging effect.)*

Torque activities are applicable to bolts, studs, nuts, and washers within systems in the scope of license renewal.

**Preventive or Mitigative Actions**

*(Preventive actions to mitigate or prevent aging degradation.)*

Proper torque techniques minimize the potential for improper preload within bolted connections, thereby minimizing the potential for mechanical joint leakage. Plant Hatch Torque Activities use the techniques described below to obtain proper preload.

Hardened steel washers may be used in conjunction with joint bolting, since they allow more of the applied torque to be translated to bolt stress, which provides the preload necessary for a tightly sealed joint. In joints subject to thermal or process load cycling, Belleville washers may be used to provide better response to the changing conditions caused by cycling.

Bolting threads and load bearing faces may be lubricated with an approved thread lubricant immediately before assembly to allow the maximum torque to be translated to bolt stress. Leveling passes are performed using a calibrated torquing tool and continue until there is no rotational movement of the fasteners at the final torque value. For any joint considered at high risk for leakage, as demonstrated by past performance or based on the judgment of the responsible supervision, leveling passes may be repeated at the final torque value after 24 hours.

The amount of preload prescribed by the Torque Activities includes a component that accounts for loss of preload due to a number of factors including:

- vibration
- gasket compression
- elastic interaction
- settlement of contact surfaces
- large cyclic load (near yield strength)
- high thermal temperatures
- self-loosening

**Parameters Inspected or Monitored**

*(Parameters inspected or monitored are linked to the degradation of the particular intended function.)*

Torque activities are not intended to directly monitor bolting parameters on an ongoing basis. The mitigative actions performed by this activity are sufficient such that this attribute is not required.

**Detection of Aging Effects**

*(The method of detection of the aging effects is described and performed in a timely manner).*

Torque activities are not intended to directly detect loss of preload within mechanical joints. The mitigative actions performed by this activity are sufficient such that this attribute is not required.

**Monitoring and Trending**

*(Monitoring and trending provide for timely corrective actions.)*

Torque activities are not intended to trend loss of preload within mechanical joints. The mitigative actions performed by this activity are sufficient such that this attribute is not required. Torque activities are considered a one time activity.

**Acceptance Criteria**

*(Acceptance criteria are included.)*

Plant Hatch torque activities are based on the guidance of EPRI NP-5769 "Degradation and Failure of Bolting in Nuclear Power Plants," Vol. 1 and 2. This EPRI document has been generally endorsed by the NRC in NUREG 1339.

Other codes and standards considered during development of the Plant Hatch torquing procedure were: ASME, Section VIII, Div. 1, App. 2; ASME, Section II, Specification for Carbon Steel Externally Threaded Standard Fasteners; ASTM Standards, Section 15, Volume 15.08, Fasteners; and ASME B31.1.

**Operating Experience**

*(Operating experience of the aging management program, including past corrective actions resulting in program enhancements or additional programs, is considered.)*

A review of plant deficiency cards submitted over the past five years shows that instances of mechanical joint leakage have been noted during inspections, system walkdowns, and regular system surveillance activities. In each case, the Plant Hatch corrective actions program was utilized to repair the leak with no loss of intended function.

**References**

1. *ASME Boiler and Pressure Vessel Code.*

2. *EPRI NP-5769 "Degradation and Failure of Bolting in Nuclear Power Plants," Vols. 1 and 2, Project 2520-7, 1988.*

3. *NUREG 1339 "Resolution of Generic Safety Issue 29: Bolting Degradation or Failure in Nuclear Power Plants," 1990.*

4. *ASME, Section II, Specification for Carbon Steel Externally Threaded Standard Fasteners.*

5. *ASTM Standards, Section 15, Volume 15.08, Fasteners*

6. *ASME B31.1 "Power Piping"*

## B.1.12 Component Cyclic Or Transient Limit Program

The Plant Hatch CCTLP is a surveillance program required by Technical Specifications. It is a monitoring program designed to track cyclic and transient occurrences to ensure that reactor coolant pressure boundary components and the torus will remain within the ASME Code Section III fatigue limits, including the effects of a reactor water environment. Currently, only monitoring of the limiting locations for the RPV is required, although monitoring of the torus and Class 1 piping has been implemented.

Plant cycles and transients that significantly contribute to fatigue usage of Class 1 components have been identified. At least once per operating cycle, each unit's operating records are reviewed to determine the number of design transients that have occurred since the last time CUF was calculated. Applying the actual cycles that have occurred to the formulas that represent design severity of cycles results in sufficient conservatism, including effects due to environmental factors, that cracking due to thermal fatigue is not expected as long as the CUF is less than 1.0.

### Program Scope

*(Scope of the program includes the specific structure, component, or commodity for the identified aging effect.)*

The scope includes the RPV, the torus and all Class 1 piping. The Unit 1 FSAR, Section 4.25 and the Unit 2 FSAR, Section 5.4.6.4 document the bounding RPV locations monitored. A fatigue evaluation of the torus established the critical locations of the torus for monitoring. All Class 1 calculations for Plant Hatch piping were screened. Those calculations showing a CUF greater than 0.1 were selected for fatigue monitoring. For each design stress calculation selected, the limiting location was determined, and a CUF monitoring formula was developed.

The monitoring formulas account for any effects due to power uprate or extended power uprate and contain sufficient conservatism to account for environmental effects of reactor water when applicable. Therefore, the bounding locations for the reactor pressure vessel, torus, and all Class 1 piping significantly susceptible to fatigue are monitored.

In addition, a screening criterion of 0.1 CUF was used, along with other criteria from Branch Technical Position MEB 3-1, in establishing postulated break locations for Class 1 piping. Piping locations with calculated CUFs less than 0.1 for 40 years and that did not meet other criteria of MEB 3-1 were not further evaluated for installation of pipe whip restraints and a pipe break was not postulated at those locations. Using a linear extrapolation, Class 1 piping locations with CUF > 0.067 but < 0.1 for 40 years might exceed 0.1 for 60 years. Cracking due to fatigue in these locations will be managed by tracking fatigue usage for three bounding locations in the set of piping locations with 40-year CUF projections between 0.067 and 0.1.

The scope of the CCTLP includes long-lived passive components in the following systems or structures:

B11 – Reactor Pressure Vessel
B21 – Nuclear Boiler
B31 – Reactor Recirculation
T23 -- Primary Containment
T52 – Containment Penetrations

**Preventive or Mitigative Actions**

*(Preventive actions to mitigate or prevent aging degradation.)*

This program does not specifically prevent or mitigate cracking in the components monitored and, therefore, is not credited for prevention or mitigation. Rather, bounding fatigue calculations for the limiting components are regularly updated based upon monitoring specific transients that have occurred since the last calculation was performed.

**Parameters Inspected or Monitored**

*(Parameters inspected or monitored are linked to the degradation of the particular intended function.)*

Plant transients were evaluated to determine what events should be considered for fatigue calculations. Plant transients that significantly contribute to fatigue usage are counted. The plant fatigue CUF is calculated for four limiting high stress RPV boundary components on each unit. The RPV main closure studs, the RPV shell, the RPV recirculation inlet nozzles, and the RPV feedwater nozzles have been shown by analysis to be the limiting components.

CUF is also calculated for the limiting location for the torus on each unit, and for eight locations within the Class 1 boundary. Class 1 monitoring includes the limiting locations on the reactor vessel equalizer piping, the core spray piping, the standby liquid control piping, the feedwater piping (including connections to HPCI, RCIC, and RWCU), and the main steam piping for Unit 1. On Unit 2, the monitored piping is the limiting locations for the feedwater piping, the primary steam condensate drainage, and the main steam piping.

The monitoring of locations corresponding to the seven locations identified in NUREG/CR-6260 for the older vintage BWR plant includes appropriate Fen factors to account for the effects due to a reactor water environment. Some of these locations are not currently monitored because their design CUF is below the 0.10 screening criteria. Formulas will be developed to add those locations to the program.

Formulas will also be developed to monitor 3 bounding locations for the set of locations with a 40-year design CUF > 0.067 and < 0.10 that have not been considered as potential break points in the current design.

**Detection of Aging Effects**

*(The method of detection of the aging effects is described and performed in a timely manner).*

This program does not actually detect the aging effect. Instead, it counts events that contribute to the aging effect and calculates a CUF value. Because of conservatisms in the calculations, a CUF of 1.0 or higher does not indicate that components have fatigue cracks. However, cracking due to thermal fatigue is not expected to occur as long as the CUF can be shown to be less than 1.0.

The CUF for each of the limiting components on each unit is calculated at least once per operating cycle. Data may be collected at any time during the surveillance period.

**Monitoring and Trending**

*(Monitoring and trending provide for timely corrective actions.)*

The surveillance is performed at least once per operating cycle. To project the 60-year CUF, the transients that occurred in recent years are averaged and multiplied by the remaining years (assuming a 60-year life). Transients that did not occur in recent years are assumed to occur once during the remaining plant life. If the 60-year CUF is projected to exceed the acceptance criteria, a condition report is initiated to determine and take appropriate corrective action. This action would include an engineering evaluation determining how long the plant can continue to operate without the CUF exceeding the acceptance criteria. Additional actions could include but are not limited to the following:

- trend the 60-year CUF projection and verify that CUF will not exceed 1.0 during the current operating cycle,
- refine the fatigue analysis and revise the monitoring formula,
- use fracture mechanics analysis to determine a critical flaw size and establish an appropriate inspection schedule (NRC approval of the critical flaw size and inspection schedule would be required for this option),
- perform corrective maintenance,
- replace the component.

**Acceptance Criteria**

*(Acceptance criteria are included.)*

High fatigue usage components have been selected to be tracked by this program to assure that the plant will continue to meet the ASME Code, Section III, and CUF design requirement value of less than 1.0.

Potential break points that have not been analyzed as such will be shown to have an actual CUF of less than 0.10.

## Operating Experience

*(Operating experience of the aging management program, including past corrective actions resulting in program enhancements or additional programs, is considered.)*

Originally, Plant Hatch calculated CUF using the design cycle numbers from the respective FSARs. After a number of years, the Unit 2 feedwater nozzles failed to meet the ASME Code, Section III design requirement value of less than 1.0 when calculated using the design cycle method.

Subsequently, Plant Hatch revised the monitoring program to adopt the more practical cycle counting method currently used. This method has been explicitly approved by the NRC. Additional monitoring points have been added.

Currently, no monitored locations are projected to exceed a CUF of 1.0 during 60 years of plant operation.

## References

1. *Edwin I. Hatch Nuclear Plant, Units 1 and 2 Final Safety Analysis Report.*

2. *Edwin I. Hatch Nuclear Plant Technical Specifications, Units 1 and 2.*

## B.1.13 Plant Service Water And RHR Service Water Inspection Program

Passive components associated with the PSW and RHRSW could potentially be adversely affected by aging mechanisms, such that loss of material, loss of heat exchanger performance, flow blockage, and cracking (of RHR heat exchanger tubes) could occur during the extended period of operation. This program is designed to detect wall thickness degradation, fouling or cracking in the PSW and RHRSW systems. The specific inspection locations in the PSW and RHRSW systems are based on a representative sample of the most susceptible locations. Locations determined to be prone to corrosion are infrequently used piping (stagnation water), submerged piping, piping with low fluid velocity, small diameter piping, backing rings, socket welds, and heat affected zone of a weld. Locations prone to clogging include those prone to corrosion, horizontal runs of piping at the bottom of vertical runs, intermittently used piping, and low point drains. Locations prone to cracking include locations susceptible to vibration fatigue and stress corrosion cracking (RHR heat exchanger tubes). Locations prone to erosion include the areas with high velocity.

This program partially satisfies the requirements of Nuclear Regulatory Commission Generic Letter 89-13, July 18, 1989. In addition, other industry standards and codes are used as guidance.

### Program Scope

*(Scope of the program includes the specific structure, component, or commodity for the identified aging effect.)*

The PSW and RHRSW inspection program will inspect portions of the following systems that are within the scope of license renewal:

E11 – RHR and RHRSW
P41 – PSW
T41 - Reactor Building HVAC
W33 - Travelling Water Screens
Z41 - Control Building HVAC

### Preventive or Mitigative Actions

*(Preventive actions to mitigate or prevent aging degradation.)*

The PSW and RHRSW piping inspection program requires that the intake structure pump suction pit will be visually inspected every twelve months by divers. Any accumulations of biological fouling organisms, sediment, and corrosion products found during the inspection will be removed to prevent these foreign materials from entering the system.

**Parameters Inspected or Monitored**

*(Parameters inspected or monitored are linked to the degradation of the particular intended function.)*

The PSW and RHRSW piping inspection program provides for visual and volumetric examinations intended to detect wall thinning, surface indications, and reduction of flow area within service water system components. This program also provides hardness testing to detect selective leaching.

**Detection of Aging Effects**

*(The method of detection of the aging effects is described and performed in a timely manner)*

PSW and RHRSW piping inspection program examinations to detect wall thickness degradation include volumetric examinations (radiographic and ultrasonic), and visual examinations (including use of depth gages). Volumetric examinations, visual inspections, and flow testing are utilized to detect reduction of flow area. At least one Brinell hardness or Rockwell test will be performed on one brass and gray cast iron component of the PSW or RHRSW system assuming such components exist within the system at the time of the test. Some inspections of the submerged portions of the piping at the intake structure will be performed by divers.

**Monitoring and Trending**

*(Monitoring and trending provide for timely corrective actions.)*

Except for the heat exchangers, which are inspected visually only, the inspection frequencies are determined by the trends in wall thickness reduction or flow area reduction. If the trend indicates that the wall thickness or flow area might be reduced to the minimum allowable value, then the inspection frequency and lot size are adjusted in accordance with the trend. ASTM E122-89, "Standard Practice For Choice Of Sample Size To Estimate A Measure Of Quality For A Lot Or Process" is used to establish the sample size. In all cases the determination of the inspection frequency will allow at least one full operating cycle to complete repairs or replacements prior to reaching the minimum allowable wall thickness value.

For RHR heat exchanger components the visual inspection frequency is every three cycles but may be revised based on observed trends. Visual inspections will also be performed on the ECCS room cooling coils and control room condensing unit tubes at a frequency prescribed by the individual procedures.

If hardness testing yields unfavorable results, the scope will be expanded to other components and systems based on engineering evaluation. Otherwise, this shall be a one-time test.

## Acceptance Criteria

*(Acceptance criteria are included.)*

Minimum wall thickness is calculated in accordance with the piping design code, piping stress requirements and the piping specification drawings. The bases for the acceptance criteria are contained in the PSW and RHRSW Inspection Program procedures. Measured wall thickness values shall not fall below these acceptable values.

Acceptance criteria for visually identified surface cracking are based on engineering evaluation and, if necessary, proper corrective actions are implemented in accordance with the Plant Hatch corrective actions program.

For flow rate testing, acceptance flow rates are based upon functional performance requirements for the component under normal and accident conditions. Acceptance criteria for hardness testing are based on the component material specifications (ASME, ASTM, etc.).

## Operating Experience

*(Operating experience of the aging management program, including past corrective actions resulting in program enhancements or additional programs, is considered.)*

It is likely that NRC Generic Letter 89-13 prompted an increased awareness toward raw water system problems and the concomitant decrease in the occurrence of those problems throughout the industry since about 1991. However, except for the obvious trend, the industry data itself is not extremely helpful in the aging management demonstration because of possible misdiagnoses, incomplete failure descriptions, and the potential for lack of conformity among the plants in reporting data.

Over the past 4 to 5 years, Plant Hatch has experienced some aging related problems in PSW and RHRSW components. These include loss of material, cracking, and loss of heat exchanger performance. Deficiencies are corrected in accordance with the Plant Hatch corrective actions program.

Based on years of experience, significant program improvements have been made in the PSW and RHRSW inspection program. For example, inspection frequencies have been increased and additional non-destructive examinations have been performed, as more data became available. In some cases, improved materials have been used to replace failed or failing piping. For example, whenever possible, small-bore carbon steel piping is replaced with 304 stainless. To date, there have been no corrosion failures in this small-bore stainless steel piping.

## References

1. *NRC Generic Letter 89-13, Service Water System Problems Affecting Safety Related Equipment, July 18, 1989.*

2. *HL-882, Georgia Power Company Response to Generic Letter 89-13, January 23, 1990.*

3. *NUREG-1275, Volume 3, Operating Experience Feedback Report – Service Water System Failures and Degradations.*

4. *Edwin I. Hatch Nuclear Plant Units 1 and 2, Generic Letter 89-13 Initial Actions Summary Report, May 1992.*

5. *SAND93-7070 "Aging Management Guideline for Commercial Nuclear Power Plants – Heat Exchangers."*

6. *ASME Boiler and Pressure Vessel Code, Code Case N-480 "Examination Requirements for Pipe Wall Thinning due to Single Phase Erosion and Corrosion, Section XI, Division 1."*

### B.1.14 Primary Containment Leakage Rate Testing Program

The Plant Hatch Primary Containment Leakage Rate Testing Program is a condition and performance monitoring program that ensures the structural integrity of primary containment through visual inspection and performance testing activities. Plant Hatch Technical Specifications require the implementation of the Primary Containment Leakage Rate Testing Program and the attendant written procedures.

**Program Scope**

*(Scope of the program includes the specific structure, component, or commodity for the identified aging effect.)*

This program applies to all 10 CFR 50 Appendix J, Option B leakage rate testing requirements for systems, structures, and components within the scope of license renewal. This includes the steel primary containment, containment penetrations, and containment internal structures that perform a pressure retaining function. All of these components are found within the Primary Containment (T23) and Drywell Penetrations (T52) systems. The program was developed through the use of 10CFR50, Appendix J, Option B, Regulatory Guide 1.163, NEI 94-01, and ANSI/ANS 56.8-1994.

The program describes the implementation and documentation requirements for the performance of leakage rate tests, including frequency of testing and leakage acceptance criteria based on requirements and guidance established in the documents referenced above and NRC approved exemptions.

**Preventive or Mitigative Actions**

*(Preventive actions to mitigate or prevent aging degradation.)*

The Primary Containment Leakage Rate Testing Program is a condition and performance monitoring program. No preventive or mitigative actions are associated with this program.

**Parameters Inspected or Monitored**

*(Parameters inspected or monitored are linked to the degradation of the particular intended function.)*

A general visual inspection of the accessible interior and exterior surfaces of the drywell and torus are performed prior to conducting a Type A (ILRT) test.

Criteria are defined for establishing Type A, Type B, and Type C test frequencies and administrative leakage limits based on performance. Type A tests (ILRT) are performed in accordance with ANSI/ANS 56.8-1994 and/or Bechtel Topical Report BN-TOP-1 to demonstrate the integrity of the primary containment pressure vessel. Type A, B, and C test intervals are established in accordance with Regulatory Guide 1.163. Type B and C tests are performed in accordance with ANSI/ANS 56.8-1994, to demonstrate the integrity of individual penetrations and components, with NRC approved Technical

Specifications amendments and exemptions. No exceptions are taken to regulatory positions C.1 through C.4 of RG 1.163.

**Detection of Aging Effects**

*(The method of detection of the aging effects is described and performed in a timely manner).*

The containment leakage rate testing program utilizes pressure tests of containment to verify that primary containment pressure integrity remains intact. In addition, general visual inspections are conducted prior to performing a type A (ILRT) test.

**Monitoring and Trending**

*(Monitoring and trending provide for timely corrective actions.)*

Type A, B, and C pressure testing is performed periodically. Test frequencies may be reduced based on previous results. Visual inspections are performed based on test results and as warranted based on pressure test frequency. The Plant Hatch corrective actions program provides for trending of deficiencies resulting from primary containment leakage rate testing.

**Acceptance Criteria**

*(Acceptance criteria are included.)*

The Primary Containment Leakage Rate Testing Program is based upon Regulatory Guide 1.163, "Performance-Based Containment Leak-Test Program," September 1995. ANSI/ANS-56.8-1994, "American National Standard for Containment System Leakage Testing Requirements, 1994," and NEI 94-01, "Industry Guideline for Implementing Performance-Based Option of 10 CFR Part 50, Appendix J", July 26, 1995 are also used.

The primary containment leakage rate acceptance criteria and the air lock testing acceptance criteria for the Plant Hatch Primary Containment Leakage Rate Testing Program are specified in Section 5.5 of the Technical Specifications.

**Operating Experience**

*(Operating experience of the aging management program, including past corrective actions resulting in program enhancements or additional programs, is considered.)*

A review of plant deficiency cards submitted over the past five years showed that several minor age related deficiencies relating to sealant degradation and associated metal corrosion had been written on the T23 and T52 systems. Several containment penetrations were replaced on Unit 1 due to excessive leakage detected during local leakage rate testing. The leakage cause was identified as maintenance related and not due to age related degradation. These deficiencies were corrected in accordance with the Plant Hatch corrective actions program.

**References**

1. *Edwin I. Hatch Nuclear Plant Technical Specifications, Units 1 and 2.*

### B.1.15 Boiling Water Reactor Vessel And Internals Program

The BWRVIP is an association of utilities formed to focus on resolution of BWR vessel and internals issues. The BWRVIP Program was developed based on over 20 years of service and inspection experience and is focused on detecting evidence of component degradation well in advance of significant degradation.

The BWRVIP developed inspection and evaluation reports for internals components and submitted them to the NRC for review and approval. These inspection and evaluation reports address both the current term and license renewal. With regard to license renewal, the inspection and evaluation reports specifically addressed the internals relative to the requirements of the 10 CFR 54 regulations. The NRC is currently completing its review of the reports and issuing SERs to address the renewal term. These SERs establish the adequacy of the internals for renewal by concluding the rule provisions have been satisfied including the identification and assessment of aging effects, the evaluation of the adequacy of those programs with regard to those aging effects, and demonstration that these programs will assure the functionality of internals into the renewal term.

SNC has evaluated the BWRVIP Program for its applicability to the Hatch Units 1 and 2 design, construction, and operating experience. The RPV internals, including the materials of construction, are addressed by the BWRVIP Program inspection and evaluation documents. The plant operation parameters, including temperature, pressure and water chemistry, are consistent with those used for the development of the inspection and evaluation documents. SNC has determined the following:

The components, which require aging management review in accordance with the Rule, are covered by the BWRVIP Program reports. The BWRVIP Program reports cover all Hatch internals design.

Therefore, SNC has established that the BWRVIP Program reports bound the Hatch Units 1 and 2 design and operation.

Additionally, the BWRVIP Program for reactor assembly components subject to license renewal as implemented at Plant Hatch employs the BWRVIP Program criteria documented in the final NRC SERs, except where specific exception has been identified to the NRC.

**Program Scope**

*(Scope of the program includes the specific structure, component, or commodity for the identified aging effect.)*

Reactor vessel internals requiring aging management within the scope of the Hatch implementation of the BWRVIP are the shroud and associated shroud repair hardware, shroud supports, core spray piping and spargers, control rod guide tubes, jet pump assemblies, control rod drive housings, and dry tubes. In the original LRA, only the Unit 1 top guide is included. Subsequent to submitting the LRA SNC has determined that due to extended power uprate the unit 2 top guide must also be included.

All of the above listed components are included as part of the Reactor Assembly (B11).

**Preventive or Mitigative Actions**

*(Preventive actions to mitigate or prevent aging degradation.)*

The BWRVIP Program is a condition monitoring program which utilizes enhanced visual inspections, as well as volumetric and surface examinations, to detect IGSCC, IASCC, and fatigue within reactor vessel internals in early stages such that proper evaluations and corrective actions may accomplished. Early detection and subsequent evaluation and corrective actions are considered adequate to mitigate degradation of reactor assembly internals before component function is adversely affected.

**Parameters Inspected or Monitored**

*(Parameters inspected or monitored are linked to the degradation of the particular intended function.)*

The BWRVIP Program reviewed the function of each internal BWR component. For those internals that could impact safety, the BWRVIP Program considered the mechanisms that might cause degradation of such components and developed an inspection program that would enable degradation to be detected and evaluated before the component function was adversely affected. Details regarding inspection and evaluation are contained within the component-specific BWRVIP inspection and evaluation documents.

**Detection of Aging Effects**

*(The method of detection of the aging effects is described and performed in a timely manner).*

The reactor internals are examined using a combination of ultrasonic, visual, and surface methods. The methods to be used and the frequency of examination will be as specified in the applicable inspection and evaluation document, unless specific exception is identified to the NRC.

**Monitoring and Trending**

*(Monitoring and trending provide for timely corrective actions.)*

Monitoring of the detrimental effects of aging within reactor assembly components are specified within BWRVIP inspection and evaluation documents. The frequency of examination specified within applicable BWRVIP inspection and evaluation documents varies for each component or subassembly. The frequency is based on the component's design, flaw tolerance, susceptibility to degradation, and the method of examination used. In cases where a component may be inspected using either visual or ultrasonic methods, the interval between examinations is shorter when visual methods are used. The Plant Hatch corrective actions program provides for trending of significant indications noted during BWRVIP inspections.

**Acceptance Criteria**

*(Acceptance criteria are included.)*

BWRVIP inspection and evaluation documents provide the basis for Plant Hatch reactor vessel internals inspection requirements, acceptance criteria, and proper corrective actions. SNC has incorporated these applicable inspection and evaluation documents into the Hatch license renewal application by specific reference. BWRVIP inspection and evaluation documents applicable to Plant Hatch reactor assembly components are as follows:

**Reactor Assembly BWRVIP Document Applicability**

| Component | Reference |
|---|---|
| shroud (including repair hardware) | BWRVIP-76 |
| shroud support | BWRVIP-38 |
| core spray piping and sparger | BWRVIP-18 |
| top guide | BWRVIP-26 |
| control rod guide tube | BWRVIP-47 |

**Operating Experience**

*(Operating experience of the aging management program, including past corrective actions resulting in program enhancements or additional programs, is considered.)*

The operating experience for the Hatch internals was reviewed. Over time there have been several occurrences of cracking, all of which have been repaired or are currently being monitored in accordance with prescribed procedures and programs. Early in life, IGSCC was detected on the Unit 1 core spray sparger. It was repaired by installation of a mechanical clamp. The sparger has been full-flow tested and the clamp examined afterwards with no evidence of degradation. Multiple indications have been detected over the years on the nonsafety-related steam dryers. Some have been repaired while others are monitored. Jet pump inspections have resulted in minor indications associated with setscrew gaps, diffuser-to-adapter welds, riser pipe welds, and tack welds. These are being monitored and reexamined in accordance with the provisions of the BWRVIP. Crack-like indications were also detected in the core shrouds for both units. SNC conservatively decided to install pre-emptive repairs to eliminate the concern of cracking in shroud circumferential welds. The repair hardware and vertical welds are periodically examined as specified in the BWRVIP.

**References**

1. *(BWRVIP-38), "BWR Shroud Support Inspection and Flaw Evaluation Guidelines," EPRI TR-108823, September 1997.*

2. *(BWRVIP-41), "BWR Jet Pump Assembly Inspection and Flaw Evaluation Guidelines," EPRI TR-108728, October 1997.*

3. *(BWRVIP-76), "BWR Core Shroud Inspection and Flaw Evaluation Guidelines," EPRI TR114232, November 1999.*

4. *(BWRVIP-18), "BWR Core Spray Internals and Flaw Evaluation Guidelines," EPRI TR-106740, July 1996.*

5. *(BWRVIP-26), "BWR Top Guide Inspection and Flaw Evaluation Guidelines," EPRI TR-107285, December 1996.*

6. *(BWRVIP-47), "BWR Lower Plenum Inspection and Flaw Evaluation Guidelines," EPRI TR-108727, December 1997.*

## B.1.16 Wetted Cable Activities

Several 4 kV power cables and transformer feeder cables within the scope of license renewal run through conduits that junction in below grade pull boxes located outside. These cables might become immersed in rainwater if left unattended. In turn, wetted cable insulation might result in loss of insulation resistance.

### Program Scope

*(Scope of the program includes the specific structure, component, or commodity for the identified aging effect.)*

Wetted cable activities pertain to certain insulated cable, outside containment, in portions of the following systems:

E11 – RHR and RHRSW
E21 – Core Spray
P41 – PSW

### Preventive or Mitigative Actions

*(Preventive actions to mitigate or prevent aging degradation.)*

By routinely monitoring for water in the applicable pull boxes, and draining accumulated water when necessary, Plant Hatch prevents or mitigates adverse changes in cable insulation resistance that might otherwise occur if cables were left immersed.

### Parameters Inspected or Monitored

*(Parameters inspected or monitored are linked to the degradation of the particular intended function.)*

Megger testing cables measures cable insulation resistance. A reduction in cable insulation resistance indicates aging degradation. Pull boxes are drained quarterly, which mitigates insulation degradation due to moisture intrusion.

E11 RHR and RHRSW motors and cable are megger tested every 18 months.
E21 Core Spray motors and cable are megger tested every 18 months.
P41 PSW motors and cables are megger tested every 12 months.

### Detection of Aging Effects

*(The method of detection of the aging effects is described and performed in a timely manner).*

Pull box water level monitoring is not intended to directly detect loss of insulation resistance. Periodic megger and PI testing is the method by which actual power cable insulation degradation would be detected, regardless of whether or not the degradation was attributable to immersion.

## Monitoring and Trending

*(Monitoring and trending provide for timely corrective actions.)*

Although procedures require pull box water levels to be recorded, and require accumulated water to be pumped out, these activities do not directly monitor or trend degradation in cable insulation resistance. Loss of insulation resistance in a power cable would be detected as a function of megger and PI testing.

The current water level surveillance frequency has proven to be adequate. However, this frequency may be adjusted due to significant events such as inordinate amounts of rainfall, etc.

Plant procedures require that deficiencies discovered during the performance of the program activities be documented in accordance with the Plant Hatch corrective actions program.

## Acceptance Criteria

*(Acceptance criteria are included.)*

Pull boxes found to contain water are required by procedure to be drained to 1 inch of water or less.

Existing cables and loads must successfully pass megger and PI testing. Leakage current for tested cables cannot be over 250 microamps (all voltages) and individual readings on each phase must be within 200% of each other. If the pull boxes contain water at the time of inspection, the water will be drained.

## Operating Experience

*(Operating experience of the aging management program, including past corrective actions resulting in program enhancements or additional programs, is considered.)*

A review of plant deficiency cards submitted over the past five years found no age-related deficiencies related to the subject cables.

## References

1. *Edwin I. Hatch Nuclear Plant, Unit 2 Final Safety Analysis Report*

### B.1.17 Reactor Pressure Vessel Monitoring Program

The RPV Monitoring Program is a condition monitoring and surveillance program at Plant Hatch. It is based on detailed evaluation of the Plant Hatch Unit 1 and Unit 2 RPVs. The program is supported by several industry topical reports developed through the BWRVIP, the principal one being BWRVIP-74, which is under review by the NRC at the time of the license renewal application.

The BWRVIP developed inspection and evaluation reports for RPV components and submitted them to the NRC for review and approval. These inspection and evaluation reports address both the current term and license renewal. With regard to license renewal, the inspection and evaluation reports specifically addressed RPV components relative to the requirements of the 10 CFR 54 regulations. The NRC is currently completing its review of the reports and issuing SERs to address the renewal term. These SERs establish the adequacy of RPV components for renewal by concluding the rule provisions have been satisfied. The provisions include the identification and assessment of aging effects, the evaluation of the adequacy of those programs with regard to those aging effects, and demonstration that these programs will assure the functionality of internals into the renewal term.

SNC has evaluated the BWRVIP Program for its applicability to the Hatch Units 1 and 2 design, construction, and operating experience. The RPV components, including the materials of construction, are addressed by the BWRVIP Program inspection and evaluation documents. The plant operation parameters, including temperature, pressure and water chemistry, are consistent with those used for the development of the inspection and evaluation documents. SNC has determined the following:

- The components, which require aging management review in accordance with the Rule, are covered by the BWRVIP reports.
- The BWRVIP Program reports cover all Hatch RPV component designs.

Therefore, SNC has established that the BWRVIP reports bound the Hatch Units 1 and 2 design and operation.

Additionally, the BWRVIP Program for reactor assembly components subject to license renewal as implemented at Plant Hatch employs the BWRVIP Program criteria documented in the final NRC SERs, except where specific exception has been identified to the NRC.

**Program Scope**

*(Scope of the program includes the specific structure, component, or commodity for the identified aging effect.)*

The RPV Monitoring Program covers the reactor vessel beltline shells, feedwater nozzles, core spray nozzles, control rod drive return line nozzle, recirculation inlet and outlet nozzles, jet pump instrumentation nozzles, and penetration seals. The core dP and standby liquid control nozzle, the support skirt and the closure studs, the attachment

welds for internal core spray pipe, jet pump riser brace pad, and shroud support are also included.

All of the above listed components are included as part of the Reactor Assembly (B11).

**Preventive or Mitigative Actions**

*(Preventive actions to mitigate or prevent aging degradation.)*

The RPV Monitoring Program is a condition monitoring and surveillance program which utilizes enhanced visual, surface, and volumetric examinations; pressure testing; and materials testing to detect cracking due to corrosion and fatigue, and loss of fracture toughness due to neutron embrittlement of beltline materials. Early detection and subsequent evaluation and corrective actions are considered adequate to mitigate degradation of reactor assembly components before component function is adversely affected.

**Parameters Inspected or Monitored**

*(Parameters inspected or monitored are linked to the degradation of the particular intended function.)*

The BWRVIP Program reviewed the function of each internal BWR component. For those internals that could impact safety, the BWRVIP Program considered the mechanisms that might cause degradation of such components and developed an inspection program that would enable degradation to be detected and evaluated before the component function was adversely affected. Details regarding inspection and evaluation are contained within the component-specific BWRVIP inspection and evaluation documents.

In addition, RPV components are inspected for cracking and loss of fracture toughness in accordance with BWRVIP-74, Section XI of the ASME Code, and 10 CFR 50 Appendices G and H.

**Detection of Aging Effects**

*(The method of detection of the aging effects is described and performed in a timely manner).*

RPV shell and head aging management is accomplished by performing ultrasonic examinations of the RPV vertical shell welds, periodic pressure tests with visual examination for leakage, and surveillance capsule testing. Plant Hatch uses an NRC approved technical alternative in lieu of ultrasonic testing of circumferential shell welds. The basis for the alternative is contained in the BWR reactor pressure vessel shell weld inspection recommendations, and associated supplements.

RPV nozzles and safe ends are examined as required by ASME Section XI or an augmented program (NUREG-0619), in accordance with the Plant Hatch ISI Program. This includes ultrasonic and surface examinations for nozzles 4 NPS and larger, and surface examinations for nozzles less than 4 NPS. Pressure tests for the Class 1

boundary are performed at the conclusion of each refueling outage in accordance with ASME Section XI.

The recirculation inlet nozzles and the feedwater nozzles are covered by the component cyclic and transient limit program described elsewhere.

**Monitoring and Trending**

*(Monitoring and trending provide for timely corrective actions.)*

Monitoring of the detrimental effects of aging within reactor assembly components is specified within BWRVIP inspection and evaluation documents, ASME Section XI, and 10 CFR 50 Appendices G and H. The Plant Hatch corrective actions program provides for trending of significant indications noted during BWRVIP inspections.

**Acceptance Criteria**

*(Acceptance criteria are included.)*

RPV ultrasonic examinations and the pressure tests with the associated visual examinations will be conducted in accordance with ASME Section XI as part of the ISI Program that is required by 10 CFR 50.55a. RPV surveillance capsule testing is required by 10 CFR 50 Appendix H. That testing provides data used to show that the criteria for fracture toughness of 10 CFR 50 Appendix G are satisfied.

Limits are imposed on pressure and temperature by 10 CFR 50 Appendix G. Pressure-Temperature limit curves have been prepared for Hatch Units 1 and 2 to allow operation up to 54 EFPY.

Appendix G of 10 CFR 50 also contains requirements for USE to ensure adequate fracture toughness is maintained. USE calculations performed for Plant Hatch limiting beltline materials, using equivalent margins analysis, justify operation up to 54 EFPY. Feedwater nozzles will be examined in accordance with ASME Section XI and the Plant Hatch implementation of NUREG-0619.

BWRVIP inspection and evaluation documents provide a basis for Plant Hatch reactor vessel inspection requirements, acceptance criteria, and proper corrective actions. SNC has incorporated these applicable inspection and evaluation documents into the Hatch license renewal application by specific reference. BWRVIP inspection and evaluation documents applicable to Plant Hatch reactor vessel components are as follows:

**Reactor Assembly BWRVIP Document Applicability**

| Component | Reference |
|---|---|
| RPV shell and heads | BWRVIP-74 |
| Nozzles (including safe ends and thermal sleeves) | BWRVIP-74 |
| Appurtenances | BWRVIP-74 |
| Penetrations | BWRVIP-27 |
| Attachments and connecting welds<br>Shroud support weld<br>Jet pump pad weld<br>Closure studs and support skirt | BWRVIP-38<br>BWRVIP-41<br>BWRVIP-48<br>BWRVIP-74 |

The requirements of ASME Section XI apply to attachments welded to the RPV, welded core support structures, and penetrations.

**Operating Experience**

*(Operating experience of the aging management program, including past corrective actions resulting in program enhancements or additional programs, is considered.)*

A review of the operating experience for both Hatch reactor pressure vessels indicates that there are no outstanding problems. Routine examinations as part of the ISI program and augmented in-vessel inspections, as well as normal maintenance and refueling activities, have not revealed any age-related issues for the reactor vessel. There was one instrument penetration that developed a leak attributed to IGSCC. The leak was detected as part of normal drywell outage activities and repaired. Corrosion was detected on the mating surface of the Unit 2 RPV head vent flange and repaired.

**References**

1. *(BWRVIP-74), "BWR Reactor Pressure Vessel Inspection and Flaw Evaluation Guidelines," Electric Power Research Institute (EPRI) TR-113596, September 1999.*

2. *(BWRVIP-27), "BWR Standby Liquid Control System/Core Plate ΔP Inspection and Flaw Evaluation Guidelines," EPRI TR-107286, April 1997.*

3. *(BWRVIP-38), "BWR Shroud Support Inspection and Flaw Evaluation Guidelines," EPRI TR-108823, September 1997.*

4. *(BWRVIP-41), "BWR Jet Pump Assembly Inspection and Flaw Evaluation Guidelines," EPRI TR-108728, October 1997.*

5. *(BWRVIP-48), "Vessel ID Attachment Weld Inspection and Flaw Evaluation Guidelines," EPRI TR-108724, February 1998.*

6. *ASME Boiler and Pressure Vessel Code.*

## B.1.18 Diesel Generator Maintenance Activities

The Diesel Generator Maintenance Activities (DGMA) provide for management of the applicable aging effects (loss of material, cracking, loss of heat exchanger performance, and loss of bolting preload) for the in-scope emergency diesel generator (EDG) components.

### Program Scope

*(Scope of the program includes the specific structure, component, or commodity for the identified aging effect)*

The DGMA are existing activities that address the aging effects for the emergency diesel generator skid-mounted components within the jacket water cooling, lubricating oil, and scavenging air subsystems that are within the boundaries of the EDG skid. The EDGs for both units are included in these activities. The components are limited to the piping, tubing, restricting orifices, valve bodies, pump casings, heat exchangers, heater casings, filter housings, strainer bodies, and strainer elements.

### Preventive or Mitigative Actions

*(Preventive actions to mitigate or prevent aging degradation)*

The DGMA are a collection of performance monitoring activities and preventive maintenance activities that ensure that the Technical Specifications for Plant Hatch are met with regard to the EDGs. The DGMA apply preventive maintenance to in-scope components in all three subsystems on the EDG skid.

Preventive or mitigative DGMA include inspections of the EDG components and evaluations of the jacket water system fluid and the lubricating oil. The inspections are visual, chemical, and also performance based. In addition, the jacket water coolant contains antifreeze with corrosion inhibitors.

The DGMA include visual inspections of the EDG components during maintenance. The DGMA also include the option for eddy current testing of the heat exchanger tubes (exposed to raw water) on an as-desired basis. These inspections and tests are designed to identify aging effects before they inhibit system performance.

Replacement of adversely affected components (and fluids, such as the jacket cooling water and lubrication oil) is also an option.

The DGMA include provisions to address the loss of preload for bolting through the normal torque activities (see section B.1.11).

The DGMA are performed at various frequencies depending upon the task. Major preventative maintenance activities on the EDGs currently are performed on a cycle corresponding to plant refueling outages. Surveillance performance tests are performed more frequently, as prescribed in the Plant Hatch Technical Specifications surveillance requirements.

**Parameters Inspected or Monitored**

*(Parameters inspected or monitored are linked to the degradation of the particular intended function)*

Fluid conditions on the EDG skid are evaluated and monitored. The jacket water coolant is evaluated for the quality and the amount of antifreeze in the solution. Lubricating oil is tested for wear products, water, fuel oil, and anti-freeze. Oil tests are compared to previous tests. The chemical properties of the lubricating oil are monitored to ensure that the lubricating oil subsystem can perform to maintain EDG operability.

The DGMA visually inspect the heat exchanger water boxes, tubes, tube sheets, and sacrificial zinc rods for damage, debris, deposits and corrosion. The optional eddy current testing evaluates the heat exchanger tube walls for defects and wall thickness.

The DGMA monitor EDG performance such that the Technical Specifications are met.

**Detection of Aging Effects**

*(The method of detection of the aging effects is described and performed in a timely manner.)*

The DGMA include regular, frequent, performance surveillance tests of the EDGs to ensure that technical specification performance requirements are met. The DGMA preventive maintenance activities occur frequently (e.g., during EDG system outages). During these tests and maintenance activities, aging effects (cracking, loss of material, and loss of heat exchanger performance) that could adversely impact the performance of the EDG component intended functions would be identified.

Evidence of corrosion or wear products in the lubricating oil is determined through chemical analysis. Loss of material can be identified through this analysis.

The DGMA can detect loss of heat exchanger performance in the heat exchangers through pressure and temperature instrumentation during the performance tests. Visual inspections during maintenance of the heat exchangers can detect loss of material due to corrosion of the heat exchanger shells. The eddy-current tests have proved useful in identifying loss of material in the heat exchanger tubes.

DGMA are not intended to directly detect loss of material or cracking within all of EDG components in the jacket water cooling and scavenging air subsystems. The preventive and mitigative actions performed by this activity are sufficient such that this attribute is not required for those aging effects in those subsystems.

**Monitoring and Trending**

*(Monitoring and trending provide for timely corrective actions.)*

Chemical analysis data for the lubrication oil is maintained such that wear and corrosion products are detected and trended. Inspection and performance data for the heat exchangers is maintained in plant records. The mitigative performance testing and preventive maintenance actions performed by the DGMA are sufficient such that additional trending is not required.

**Acceptance Criteria**

*(Acceptance Criteria are included.)*

For performance tests, the acceptance criteria are listed in the specific plant procedures and are intended to ensure that system operating temperatures, pressures, and expansion tank levels are within the acceptable operating ranges. For preventative maintenance activities, the acceptance criteria are also contained within the maintenance procedures and are commensurate with the safety significance of the component inspected. After maintenance, the performance of the components must be such that the performance test criteria are satisfied. No industry codes or standards apply to this activity.

**Operating Experience**

*(Operating experience of the aging management program, including past corrective actions resulting in program enhancements or additional programs, is considered.)*

A review of the condition reporting database revealed several occasions where the cooler tubes required replacement or repair for excessive loss of material up to and including leakage of the tubes. The corrective actions were accomplished prior to a loss of system intended function. In addition, performance deficiencies were identified with the AMOT thermostatic flow control valves where the valves leaked passed the valve seat or were not otherwise performing their temperature control function adequately. Neither loss of material nor cracking in the valve body caused these performance deficiencies. The deficiencies were not the same as those described in NRC IN 91-85, and the valves were replaced or refurbished prior to a loss of system intended function.

## B.2 ENHANCED PROGRAMS AND ACTIVITIES

### B.2.1 Fire Protection Activities

Fire protection activities are comprised of inspections, condition monitoring and performance monitoring activities. Fire protection activities provide assurance that loss of material, cracking, flow blockage, and changes in material properties will not prevent the performance of necessary safe shutdown functions.

**Program Scope**

*(Scope of the program includes the specific structure, component, or commodity for the identified aging effect.)*

The Plant Hatch fire protection activities credited for license renewal include those portions of fire protection systems identified in the Fire Hazards Analysis (FHA) as forming part of the CLB. These include passive long-lived components in water based and gaseous fire suppression systems, the fire pump diesel fuel oil supply system (tanks and piping), fire doors, fire penetration seals, fire dampers, and cable tray enclosures. All of these components are part of the fire protection (X43) system.

The current term fire protection activities have been enhanced for the period of extended operation to include periodic inspection of water suppression system strainers and sprinkler heads. These enhancements will be implemented by midnight August 6, 2014 for Unit 1, and midnight June 13, 2018 for Unit 2.

**Preventive or Mitigative Actions**

*(Preventive actions to mitigate or prevent aging degradation.)*

The fire protection activities are comprised of inspections, condition monitoring and performance monitoring activities. There are no preventive or mitigate attributes associated with the condition and performance monitoring elements of this program.

**Parameters Inspected or Monitored**

*(Parameters inspected or monitored are linked to the degradation of the particular intended function.)*

Surveillance and inspection of in-scope fire protection system components are performed in accordance with the requirements and frequencies of the applicable portions of both Appendix B of the FHA and plant procedures that cover in-scope components.

For water based fire protection systems, the fire protection activities include the following tests and inspections. Flushing of loop headers is performed at least once per 18 months to remove corrosion product buildup and ensure adequate flow through the system. Flow testing of water based fire suppression mains is performed at least once per 3 years and system frictional pressure drop is measured. Fire Water Tank external surfaces are inspected annually and external and internal surfaces are inspected once per 5 years for corrosion and general condition of the protective coating. Sizes and

depth of pits are recorded and interior surfaces are cleaned as required to facilitate inspection. The contained water supply volume in these tanks is confirmed at least once per 31 days. Each fire pump is started at least once per 31 days and run for at least 30 minutes. Each diesel driven pump is started at least once per 18 months during shutdown and run for at least 60 minutes. The capacity and developed head of each fire pump is confirmed at least once per 12 months. FHA Appendix B sprinkler heads and nozzles are visually inspected for degradation at least once per 18 months and FHA Appendix B open head / deluge spray nozzles are air flow tested at least once per 3 years. A sprinkler system header flow activity is conducted quarterly to verify unobstructed flow. A sprinkler system trip test is conducted for FHA Appendix B sprinkler systems at least once per 6 months to verify operability. FHA Appendix B hose stations are inspected at least once per 31 days and hose station valves are partially opened to demonstrate unobstructed flow at least once per 2 years. All other in-scope hose stations are inspected at least once every quarter and hose station valves are partially opened to demonstrate unobstructed flow at least once every 5 years. Water suppression system strainer internals are inspected at least once per 2 years. In-scope fire hydrants are flow checked at least once per 12 months. Each testable isolation valve in the water suppression system flow path is cycled at least once per 12 months and each valve that is not testable during plant operation is cycled at least once per 18 months. All in-scope, above ground piping and equipment coatings or paint are inspected per the industry guidance of the Protective Coatings Program.

For the fire protection pump diesel fuel oil supply system, the fire protection activities include the following tests and inspections. Each fire diesel fuel oil storage tank level is confirmed at least once per 31 days. The fuel oil system is inspected for leaks at least once per 31 days. Each fuel oil storage tank is sampled for water, sediment, and other contaminants at least once per 92 days. The fuel oil storage tanks are drained and inspected for corrosion, based on sampling and as deemed necessary by Plant Maintenance Engineering. Each fire diesel is started and operated at least once per 31 days and at least once per 18 months during shutdown to demonstrate, among other things, operability of fuel oil supply system. All in-scope, above ground piping and equipment coatings or paint are inspected per the industry guidance reflected in the Protective Coatings Program.

For compressed gas based fire suppression systems, the fire protection activities include the following tests and inspections. All $CO_2$ system components are visually inspected at least once every 62 days and performance tested at least once per 12 months. The periodic visual inspections include $CO_2$ storage tank pressure and level, tank insulation condition, and pressure boundary leaks. The performance test includes the discharge of a small volume of $CO_2$ through system nozzles within a specified time period. All in-scope, above ground $CO_2$ piping and equipment coatings or paint are inspected per the industry guidance of the Protective Coatings Program.

For fire penetration seals, the fire protection activities include the following inspections. A minimum 10% sample of each type of penetration seal is visually inspected at least once per 18 months and samples are selected such that each penetration seal is inspected at least once per 15 years.

For cable tray enclosures, the fire protection activities include the following inspections. In-scope cable tray enclosures are visually inspected at least once per 18 months.

For fire doors, the fire protection activities include the following tests and inspections. In-scope fire doors are visually inspected at least once per 6 months and functionally tested at least once per 18 months. Exterior coatings or paint are inspected per the industry guidance reflected in the Protective Coatings Program.

For fire dampers, the fire protection activities include the following tests and inspections. In-scope fire dampers are visually inspected and functionally tested at least once per 18 months. Exterior coatings or paint are inspected per the industry guidance of the Protective Coatings Program.

An inspection called "Sprinkler Head Inspections" will be performed periodically for closed sprinkler heads in the scope of license renewal. The first inspection will take place after 50 years of service and subsequent inspections at 10-year intervals thereafter. Consistent with the guidance in NFPA-25, a random sampling of each type of closed sprinkler head in the scope of license renewal will be submitted to a recognized laboratory for testing. Based on the results, corrective actions will be accomplished, if required, to assure continued sprinkler head function during the period of extended operation.

**Detection of Aging Effects**

*(The method of detection of the aging effects is described and performed in a timely manner).*

Detection of flow blockage, loss of material, cracking, and changes in material properties are accomplished directly by visual examinations of component surfaces and laboratory testing and indirectly through the use of flow or functional testing.

**Monitoring and Trending**

*(Monitoring and trending provide for timely corrective actions.)*

Inspection and performance test results are maintained in plant records. Engineering personnel track and trend results in accordance with site procedures.

**Acceptance Criteria**

*(Acceptance criteria are included.)*

Any significant degradation of fire protection system components observed during visual inspections or performance testing activities are noted and corrective actions implemented in accordance with the Plant Hatch corrective actions program. Acceptance criteria are specifically stated in the plant procedures that govern each test or inspection.

**Operating Experience**

*(Operating experience of the aging management program, including past corrective actions resulting in program enhancements or additional programs, is considered.)*

Based on a review of five years of plant deficiency card data, deficiencies in water based fire suppression systems include deterioration of coatings within the fire water storage tank and fouling of lines due to corrosion product buildup. These deficiencies were identified during testing and inspection required by the Fire Protection Activities or during normal walkdowns. Due to the design features of the system, including excess capacity and loop design, none of these failures was judged to constitute a loss of intended function.

A similar plant deficiency card review for other fire protection system components, identified deficiencies concerning minor degradation of fire penetration seals and exterior corrosion on gaseous fire suppression system piping. None of these deficiencies were determined to be significant since no loss of intended function occurred.

**References**

1. *Edwin I. Hatch Nuclear Plant, Units 1 and 2 Fire Hazards Analysis and Fire Protection Program.*
2. *NFPA 25 - National Fire Protection Association Standard*

### B.2.2 Flow Accelerated Corrosion Program

The FAC Program is a condition monitoring program designed to monitor pipe wear in those systems that have been determined to be susceptible to FAC-related loss of material. FAC is different from many other corrosion processes in that corrosion rates may be generally predicted.

The basis for the Plant Hatch FAC program is EPRI NSAC-202L "Recommendations for an Effective Flow-Accelerated Corrosion Program" and the associated CHECWORKS™ computer code which is used to create a Plant Hatch predictive CHECWORKS™ FAC model. This plant predictive FAC model accounts for system conditions relevant to FAC such as pH, dissolved oxygen content, fluid (steam) quality, temperature, pipeline velocity, component geometry, and material of construction.

**Program Scope**

*(Scope of the program includes the specific structure, component, or commodity for the identified aging effect.)*

Portions of the following systems are included within the scope of the FAC program:

B21 – Nuclear Boiler
E41 – HPCI
E51 – RCIC
N61 – Main Condenser

Portions of these systems are modeled by the plant predictive FAC model and are periodically examined based on the recommendations of the EPRI NSAC-202L since they meet all of the screening criteria contained within EPRI NSAC 202L for systems potentially susceptible to FAC.

The FAC program will be enhanced to include some of the in scope components in the systems listed above that do not meet all of the FAC criteria, within EPRI NSAC 202L, and that are excluded from the plant predictive FAC model. These components will be inspected in accordance with FAC program requirements. This enhancement will be implemented by midnight August 6, 2014 for Unit 1, and midnight June 13, 2018 for Unit 2.

**Preventive or Mitigative Actions**

*(Preventive actions to mitigate or prevent aging degradation.)*

The FAC program is a condition monitoring program that utilizes ultrasonic, radiographic, and visual inspections to identify aging effects prior to any loss of intended function. As such, there are no preventive or mitigative attributes associated with this program.

**Parameters Inspected or Monitored**

*(Parameters inspected or monitored are linked to the degradation of the particular intended function.)*

The primary parameter monitored by the FAC program is component wall thickness.

**Detection of Aging Effects**

*(The method of detection of the aging effects is described and performed in a timely manner).*

FAC program inspection techniques are based on the recommendations of EPRI NSAC-202L. UT by qualified and certified inspection personnel is utilized to detect wall thinning. RT is permissible in cases where UT is impractical, such as small-diameter piping. In certain cases visual examinations of the piping inside diameter may be performed with follow-up UT contingent upon the visual examination results.

Additionally, the plant predictive FAC model predicts wear rates in FAC susceptible piping systems, thereby providing an estimate of possible aging effects within FAC susceptible systems.

**Monitoring and Trending**

*(Monitoring and trending provide for timely corrective actions.)*

The CHECWORKS™ program contains a database that maintains inspection data for in-scope components and adjusts wear predictions for affected lines using this inspection data. Inspection results and information obtained from the plant predictive FAC model are also used to estimate future monitoring requirements.

Inspection data related to components not included within the plant predictive FAC model is documented by procedure and utilized to estimate future inspection requirements.

**Acceptance Criteria**

*(Acceptance criteria are included.)*

Inspection data is reviewed to determine whether component wall thickness falls below the "action level" for a particular component. The "action level" is typically calculated as the thickness halfway between code minimum wall thickness and the nominal wall thickness referenced by the design code of record. Wall thickness measurements falling below the "action level" are evaluated to determine proper corrective actions.

**Operating Experience**

*(Operating experience of the aging management program, including past corrective actions resulting in program enhancements or additional programs, is considered.)*

Plant Hatch maintains awareness of FAC-related events and developments in the industry. This is accomplished through correspondence with EPRI and regular review of industry and regulatory-generated documents. Additionally, EPRI NSAC-202L considers

historical data collected from industry and contains lessons learned from years of operating experience, thereby assuring that past experience has been utilized to improve the program methods.

A review of condition reports written during the past five years revealed the following applicable occurrences. Deficiency Notice CO9903259 was written to identify a pipe leak downstream of orifice 1B21-D001 between the orifice flange and the downstream elbow of the main steam line drain to the condenser. The corrective action replaced the damaged piping and fittings as well as incorporated this section of piping into the FAC program to monitor and detect any future degradation.

Several other events have been identified per the deficiency control system related to pressure boundary failures in small bore piping of the HPCI and RCIC main steam supply drain path to the condenser. All these events consisted of loss of material in piping components due to erosion–corrosion or FAC. These failures provide the evidence that these aging mechanisms are detrimental to this commodity group. The corrective action, for these operating events, consists of replacing the degraded lines with material that is not susceptible to FAC, i.e., alloy steel piping. This corrective action is complete for Unit 2 and will be completed on Unit 1 during RF019.

In-scope high-pressure drain manifold to the Unit 2 condenser was replaced with chrome-moly piping as a result of FAC program inspections, wear rate analysis and corrective action implementation. This manifold is part of in-scope function N61-03, radioactive decay hold-up volume. Within this same function, main steam drain pot drain piping to the high pressure manifold have also been replaced with FAC resistant chrome-moly piping based on FAC Program inspections and corrective actions.

**References**

1. *EPRI NSAC-202L R2 "Recommendations for an Effective Flow-Accelerated Corrosion Program."*

2. *EPRI TR-106611 R1 "Flow Accelerated Corrosion in Power Plants."*

3. *NRC Generic Letter 89-08, Erosion/Corrosion-Induced Pipe Wall Thinning.*

4. *Southern Company Services, "Flow-Accelerated Corrosion (FAC) Program, Hatch Nuclear Plant Units 1 and 2", Volumes 1 and 2.*

### B.2.3 Protective Coatings Program

The Plant Hatch Protective Coatings Program provides a means of preventing or minimizing corrosion that would otherwise result from contact of the base material with a corrosive environment. It is a mitigation and condition monitoring program designed to provide base metal aging management through surface application, maintenance, and inspection of protective coatings on selected components and structures.

**Program Scope**

*(Scope of the program includes the specific structure, component, or commodity for the identified aging effect.)*

The protective coatings program provides specifications for all coatings applied at Plant Hatch and specific inspection techniques and frequencies for service level I coatings (which include non-immersion coatings applied to the suppression chamber and drywell airspace and immersion coatings applied to the suppression chamber interior below the normal water level).

The protective coatings program will be enhanced to provide inspection techniques and frequencies for certain non-service level I coatings. The new requirements apply to external surfaces of carbon steel commodities in-scope for license renewal that are exposed to inside, outside, submerged, and buried environments and are expected to experience significant atmospheric corrosion.

Program enhancements will be implemented by midnight August 6, 2014 for Unit 1 and common system components, and midnight June 13, 2018 for Unit 2.

Portions of the following systems fall under the scope of the protective coatings program:

B21- external coated surfaces including bolting
C11- external coated surfaces including bolting
C41- accumulator tank (interior surface)
E11- external coated surfaces including bolting (see Note 1)
E21- external coated surfaces including bolting
E41- external coated surfaces including bolting
E51- external coated surfaces including bolting
F15- coated steel structures
H11- coated supports
H21- coated supports
L35- coated supports
L48- coated steel structures
N61- external coated surfaces including bolting
P41- external coated surfaces including bolting (see Note 1)
P42- external coated surfaces including bolting
P52- external coated surfaces including bolting
P64- external coated surfaces including bolting
P70- external coated surfaces including bolting
R33- coated supports

T23- coated surfaces including bolting
T24- coated steel structures
T29- coated steel structures
T31- coated steel structures
T41- external coated surfaces including bolting
T46- external coated surfaces including bolting (see Note 1)
T48- external coated surfaces including bolting
T49- external coated surfaces including bolting
T52 - coated steel structures
T54- coated steel structures
U29- coated steel structures
W33- coated steel structures and bolting
W35- coated steel structures
Y29- coated steel structures
Y32- coated steel structures
Y39- coated steel structures
X41- external coated surfaces including bolting
X43- external coated surfaces including bolting, firewater storage tanks (internal surface) (see Note 1)
Y52- external coated surfaces including bolting (see Note 1)
Z29- coated steel structures
Z41- external coated surfaces including bolting

Note 1- Buried or embedded components/structures will be inspected when they become available due to maintenance activities.

**Preventive or Mitigative Actions**

*(Preventive actions to mitigate or prevent aging degradation.)*

Proper application of coatings will limit normal corrosion processes by preventing direct contact between susceptible base materials and environmental conditions conducive to corrosion.

**Parameters Inspected or Monitored**

*(Parameters inspected or monitored are linked to the degradation of the particular intended function.)*

Periodic inspection of components is conducted in order to identify areas of degraded coatings and associated corrosion of base metals. Inspection techniques may include visual examination of components for degradation and mapping, marking and photography of areas where significant degradation is identified. Also, for surfaces determined to be suspect, dry film thickness, adhesion, and continuity tests may be performed.

When application of new coatings is required, inspection of the newly applied coatings includes visual inspections. If required, profile measurements on newly prepared surfaces and holiday testing and dry film thickness measurements on newly applied coating systems are also monitored. Finally, during coating application, ambient

conditions and surface temperatures are periodically monitored to ensure suitable conditions for mixing and applying coatings are present.

**Detection of Aging Effects**

*(The method of detection of the aging effects is described and performed in a timely manner).*

Coating degradation can occur in areas of adverse environmental conditions, such as excessive moisture or chemical impurities. Coatings inspection frequencies are determined by the Plant Hatch coatings specialist such that any age related degradation is detected prior to an impact on intended functions. Service level I coatings are inspected at set intervals. Frequencies for other coating inspections are determined using operating experience and expected environmental conditions. Coal tar enamel coatings applied to buried carbon steel components are inspected whenever these items are unearthed for maintenance.

**Monitoring and Trending**

*(Monitoring and trending provide for timely corrective actions.)*

Results of coatings inspections are documented in accordance with Plant Hatch procedural requirements. For service level I coatings, a record will be kept concerning locations of minor deterioration, and subsequent evaluation. For all coatings, a summary of findings and recommendations for future actions will be maintained. Significant degradation identified during coatings inspections are also identified utilizing the Plant Hatch corrective actions program.

A baseline inspection of all in-scope coated components will be performed, with the exception of buried piping that will be inspected as available due to excavation activities. Subsequent inspection frequency will be determined based on the results of the baseline inspection.

**Acceptance Criteria**

*(Acceptance criteria are included.)*

Acceptance criteria for the protective coatings program may be categorized into 3 areas; surface preparation, coatings application, and inspection activities. Specific acceptance criteria for the protective coatings program are based on the guidance of ANSI, ASTM, and EPRI technical documentation.

Surface preparation will be performed in accordance with industry guidance listed below. Coating application is not allowed to proceed until applicable solvent cleaning; removal of stratified rust, loose mill scale, non-adherent paint, and weld flux and splatter; and thick edge paint feathering has been accomplished.

Application of coatings and subsequent curing may only occur when environmental and surface conditions are in accordance with applicable industry standards and vendor recommendations

Visual inspection after coating application confirms that the appearance and condition of the applied coating are representative of good work practices. Subsequent visual inspections to identify degradation of coatings will be performed to ensure no intended functions are inhibited.

**Operating Experience**

*(Operating experience of the aging management program, including past corrective actions resulting in program enhancements or additional programs, is considered.)*

A review of plant deficiency cards submitted over the past five years identified many instances of coating degradation. Primarily, these deficiencies related to corrosion of carbon steel and low alloy components in areas where the existing coating had broken down, no coating was originally applied, or wetting due to leakage had occurred.

Relevant operating experience for in scope buried piping is limited to PSW, RHRSW, and diesel fuel oil supply piping since no credit was taken for the coatings installed on fire protection cast iron piping. A review of more than 36,000 plant deficiency cards and interviews with key personnel revealed no age related failures of piping due to coating degradation over the past 5 years.

**References**

1. *Electric Power Research Institute TR-109937 "Guideline on Nuclear Safety-Related Components."*

2. *ANSI N5.9 – 1967, "Protective Coatings (Paints) for the Nuclear Industry."*

3. *ANSI N5.12 – 1972 "Protective Coatings (Paints) for the Nuclear Industry."*

4. *ANSI N101.2 – 1972 "Protective Coatings (Paints) for Light Water Nuclear Reactor Containment Facilities."*

5. *ASTM Section 6, Vol. 6.02 "Paints-Products and Applications; Protective Coatings; Pipeline Coatings."*

6. *American Water Works Association (AWWA) C203 – 1966 "Standard for Coal-Tar Protective Coatings and Linings for Steel Water Pipelines – Enamel and Tape – Hot Applied."*

7. *AWWA C209 – 1995 "Cold Applied Tape Coatings for the Exterior of Special Sections, Connections, and Fittings for Steel Water Pipelines," 2nd Ed.*

### B.2.4 Equipment And Piping Insulation Monitoring Program

Equipment and piping insulation performance may be degraded if the insulation or jacketing is damaged. The Equipment and Piping Insulation Monitoring Program at Plant Hatch is a condition monitoring program designed to detect insulation damage through periodic inspection of specific passive component insulation.

**Program Scope**

*(Scope of the program includes the specific structure, component, or commodity for the identified aging effect.)*

The Equipment and Piping Insulation Monitoring Program currently inspects outside insulation within the scope of license renewal. It will be enhanced to include portions of the following systems that are within the scope of license renewal:

C41 – SLC System
E11 – RHR and RHRSW
E21 – Core Spray
E41 – HPCI
E51 – RCIC
P11 – Condensate Transfer and Storage
P41 – PSW
X43 – Fire Protection

Program enhancements will be implemented by midnight August 6, 2014 for Unit 1, and midnight June 13, 2018 for Unit 2.

**Preventive or Mitigative Actions**

*(Preventive actions to mitigate or prevent aging degradation.)*

Plant Hatch procedures contain precautions that mitigate insulation damage by limiting climbing on pipe insulation unless specifically justified by an engineering review and evaluation. Damage is further mitigated by procedures that provide specific instructions for removal, storage and installation of thermal and reflective insulation.

**Parameters Inspected or Monitored**

*(Parameters inspected or monitored are linked to the degradation of the particular intended function.)*

The Equipment and Piping Insulation Monitoring Program will be enhanced to periodically inspect in-scope insulation, that is readily accessible, for holes, tears, compaction, material separation, wetting, missing insulation and general deterioration. Aluminum and galvanized steel insulation jackets and their binders will be inspected for cracking and loss of material.

**Detection of Aging Effects**

*(The method of detection of the aging effects is described and performed in a timely manner).*

Appropriate visual inspection techniques will be used for the inspections. These techniques will be specified in plant procedures for these inspections and will include remote visual inspection using binoculars or other devices for some locations. The exterior surfaces of the insulation system are visually inspected for obvious degradation. Exterior surfaces may consist of protective metal jacket covers that are not removed unless there is obvious degradation or evidence of a problem in the underlying insulation, such as significant corrosion or water egress from within the jacketing system. Once degradation is found, the outer metal jacket may be removed to further investigate the underlying insulation material condition. All in-scope external jackets and binders are visually inspected for holes, tears, cracks, significant corrosion, missing material, and generally deteriorated condition. When warranted by external inspection, the affected underlying insulation material is visually inspected for holes, tears, compaction, material separation, wetting, missing insulation, and generally deteriorated condition due to cracking, settling, and thermal degradation. None of these conditions (holes, tears, cracks, missing material, etc.) is acceptable. If degradation is discovered, corrective action must be initiated to remedy the condition. Since the entire in-scope insulation system, to the extent it is accessible, is inspected, there is no sample size.

**Monitoring and Trending**

*(Monitoring and trending provide for timely corrective actions.)*

Deficiencies discovered during these insulation inspections will be documented in accordance with the Plant Hatch corrective actions program. For outside insulation and jackets, the frequency of inspections is once per year. For inside insulation and jackets, all in-scope insulation is to be inspected within 2 refueling cycles of issuance of the new operating license and at least once every 10 years thereafter.

**Acceptance Criteria**

*(Acceptance criteria are included.)*

Any unacceptable indication of corrosion or insulation damage will be evaluated and, if warranted, additional inspections will be performed. Corrective actions, if required, will be addressed through the existing Plant Hatch corrective actions program.

**Operating Experience**

*(Operating experience of the aging management program, including past corrective actions resulting in program enhancements or additional programs, is considered.)*

A review of plant deficiency cards submitted over the past 5 years did not identify any age-related degradation in insulation or insulation jacketing for the components within the scope of license renewal.

**References**

*None.*

### B.2.5 Structural Monitoring Program

The Plant Hatch SMP provides a stepped, condition monitoring and appraisal process for structures and components within the scope of the Maintenance Rule (10 CFR 50.65) and the License Renewal Rule (10 CFR 54). The program is patterned after the Westinghouse Owners Group Life Cycle Management/License Renewal Program.

**Program Scope**

*(Scope of the program includes the specific structure, component, or commodity for the identified aging effect.)*

The Structural Monitoring Program monitors the following structures, components and commodities. This list reflects a recent revision to the SMP to address program enhancements made as a result of license renewal.

- Switchyard (not required for License Renewal)
- Reactor Buildings
- Turbine Buildings
- Intake Structure
- Off Gas Stack
- EDG Building
- Control Building
- Waste Gas Building (not required for License Renewal)
- Condensate Storage Tank foundations and concrete walls surrounding the tanks
- PSW Valve Pits
- Diesel Generator Fuel Oil Storage Tanks
- Nitrogen Storage Tank Foundations
- Foundations for the two fire protection water storage tanks
- Foundations for the two fire protection diesel pump tanks
- Foundations for the fire pump house
- Underground concrete duct runs and pull boxes between Class I structures
- Category I and II/I piping supports and tube tray supports
- Category I HVAC duct supports
- Category I and II/I cable trays and supports
- Category I and II/I conduits and supports
- Category I control room panels, racks and supports
- Category I auxiliary panels, racks and supports
- Sealants in the joints between the reactor building exterior precast siding panels
- Reactor Building tornado vents
- Reactor Building penetrations
- Piping

**Preventive or Mitigative Actions**

*(Preventive actions to mitigate or prevent aging degradation.)*

The SMP is a condition monitoring program that utilizes visual inspections to identify aging effects prior to any loss of intended function. As such, there are no preventive or mitigate attributes associated with this program.

**Parameters Inspected or Monitored**

*(Parameters inspected or monitored are linked to the degradation of the particular intended function.)*

Concrete structures are inspected for cracking and spalling. Masonry block walls are inspected for cracking. Steel structures and components are inspected for corrosion. Panel joints seals and sealants are inspected for loss of adhesion, material property changes and cracking. The acrylic domes on the tornado vents will be inspected for cracking. Piping will be inspected for leakage.

**Detection of Aging Effects**

*(The method of detection of the aging effects is described and performed in a timely manner).*

The SMP inspection process assesses the ongoing, overall conditions of the buildings and structures, and identifies any ongoing degradation. Structure condition is assessed through a visual inspection. Inspections include those normally accessible, as well as those below ground or embedded. When normally inaccessible structures are exposed because of excavation or modification, an examination of the exposed surfaces is performed. Structures are monitored for changes in previously identified findings and for newly developed conditions. Trending of such findings is performed to predict degrading conditions and to determine the potential long-term impact of the finding.

The inspections are performed by qualified personnel, using detailed checklists, inspection tools and preparations. All inspection results are documented in checklists and noted degradation may be documented utilizing digital photography.

The inspection frequency for plant structures varies according to site conditions and susceptibility to aging degradation. As a result of the baseline inspections a five-year inspection frequency was established for the structures monitored. This frequency will continue unless the conditions, environment, or noted degradation warrant a change. At this time, the plant has elected to inspect the intake structure every operating cycle due to humid environmental conditions. However, based on the results of future intake structure inspections, the plant may elect to go back to a five-year frequency. For areas of the subject buildings and structures that are inaccessible due to physical obstruction, and below grade, embedded or buried components, inspections are performed whenever these areas are excavated, exposed or modified.

As an additional measure of detection, the standby gas treatment system flow test can detect gross changes in in-leakage that may be indicative of age-related degradation and identification and correction of leakage from piping systems can

prevent age related degradation of components affected by that leakage.

**Monitoring and Trending**

*(Monitoring and trending provide for timely corrective actions.)*

Initial inspections (baseline) were conducted to facilitate condition trending. Structures are monitored for changes in previously identified findings and for newly developed conditions. Trending of such findings is performed to predict degrading conditions and to determine the potential long-term impact of the finding.

The reactor building (including spent fuel areas), control building, turbine building, offgas stack, diesel building, condensate storage building, plant service water valve pits, diesel fuel storage tanks, and nitrogen storage tanks will be inspected on a 5 cycle interval. Certain areas within the reactor building will be inspected every other cycle. These include the drywell, torus (inside), and overhead cranes.

**Acceptance Criteria**

*(Acceptance criteria are included.)*

Acceptance criteria for the inspection and criteria for categorizing the overall structure and component conditions (i.e., acceptable, acceptable with deficiency, or unacceptable) are provided in the procedure. The acceptance criteria are consistent with the recommended criteria in ACI-349.3R-1996, but also include additional criteria for roof ponding, water leakage, coatings, penetration seals, etc. The results of the inspections are evaluated in accordance with the guidance given in NEI-96-03 and NRC Regulatory Guide 1.160. The results of SMP inspections are forwarded to the Maintenance Rule Coordinator who determines if any condition reports should be initiated.

The following selected acceptance criteria are detailed in the Structural Monitoring Program for acceptability of the components:

<u>Concrete Components</u>

Spalls less than 3/4" in depth and 8" in dimension

Passive cracks less than 0.040" in width, measured below any surface enhanced widening ("passive cracks" are those with no evidence of recent growth and absence of other degradation mechanisms at the crack). For cracks greater than or equal to 0.040" in width, the length of the crack will be measured / estimated and documented in the database.

<u>Concrete Embedments</u>

Corrosion on exposed embedded metal surfaces, which is not progressing and has not resulted in loss of cross section greater than 10%

Concrete Joints

No signs of separation or environmental degradation are present in joints or joint material

Block Walls

The acceptance of possible cracking in block walls should be performed considering the individual plant design analysis (IEB 80-11 or otherwise). Existing analysis may have considered some degree of cracking in the evaluation.

Lateral supports for seismic block wall should be appropriately anchored.

Interfaces between the block walls and concrete floors, walls and floors should show no evidence of damage or movement.

Steel Components

General corrosion with the presence of red iron oxide (rust), surface stains, spots or surface discoloration

General corrosion with the presence of red iron oxide (rust) particles / scale which are easily removed from the surface.

Localized corrosion with the presence of small diameter pitting (black iron oxide powder in pits indicates active pitting and red iron oxide powder in pits indicates inactive pitting) on exposed (coated or uncoated) metal surfaces that is not progressive

Localized corrosion with the presence of loose rust flakes peeling or blooming from metal surfaces. The loss of cross section is less than 10% and corrosion is not progressive.

Leakage from piping.

**Operating Experience**

*(Operating experience of the aging management program, including past corrective actions resulting in program enhancements or additional programs, is considered.)*

In 1996 and 1997, an initial evaluation was performed, as part of the Structural Monitoring Program, to establish a baseline condition of the subject buildings and structures. Areas within the scope of the Maintenance Rule were visually inspected and photographs were made to document notable degrees of degradation. Specific items and areas included in the inspections were the roof, settlement around the building, outer concrete walls and penetrations, interior concrete columns, beams, floors, walls, interior steel superstructure columns, girders and beams, foundations, anchor bolts, and equipment slabs. Specific items and areas also included in the inspection of the sealants were the outer pre-cast concrete wall panels and the CST transfer pump wall joints. All inspected areas were found "Acceptable - no further evaluation required."

Condition surveys were conducted in April 1997 and November 1997. The inspection reports concluded the same findings as previous reports. Previous results of settlement surveys, and associated calculations, were also reviewed and all structures were found to be within acceptable settlement limits. The sealant and backing rod used to seal the joint between exterior pre-cast panels on the Unit 1 and Unit 2 reactor buildings has also been replaced to repair degraded caulking.

**References**

1. *A-44985, Structural Monitoring Program for the Maintenance Rule, Edwin I. Hatch Nuclear Plant, Units 1 and 2*

2. *10CFR50.65, "Requirements for Monitoring the Effectiveness of Maintenance at Nuclear Power Plants."*

3. *Westinghouse Owner's Group Life Cycle Management / License Renewal Program, Altran Corporation / Altran Materials Engineering.*

4. *ACI Committee 349, Repot ACI 349.3R-96, "Evaluation of Existing Nuclear Safety-Related Concrete Structures."*

5. *NEI 96-03 "Guideline for Monitoring the Condition of Structures at Nuclear Power Plants."*

6. *NRC Regulatory Guide 1.160, Rev 2 "Industry Guideline for Monitoring the Effectiveness of Maintenance at Nuclear Power Plants."*

7. *Unit 1 and Unit 2 Plant Hatch Technical Specifications, SR 3.6.4.1.4.*

## B.3 NEW PROGRAMS AND ACTIVITIES

### B.3.1 Galvanic Susceptibility Inspections

The Plant Hatch Galvanic Susceptibility Inspections will provide for condition monitoring via one time inspections that will provide objective evidence that galvanic susceptibility is being managed for specific components within the scope of license renewal.

Since galvanic corrosion is most likely in commodities within environments that are more corrosive (high impurity and conductivity levels), these inspections will start with the more corrosive raw water environment.

**Program Scope**

*(Scope of the program includes the specific structure, component, or commodity for the identified aging effect.)*

Galvanic Susceptibility Inspections will examine a sample population of carbon to stainless steel connections (welded and flanged) that should exhibit the largest galvanic coupling. If the examined carbon to stainless connections show galvanic corrosion, the sample set will be expanded to other water systems. Systems include:

B21 – Nuclear Boiler
C11 – CRD
E11 – RHR and RHRSW
E21 - Core Spray
E41 – HPCI
E51 – RCIC
N61 – Main Condenser System
P41 – PSW
R43 – EDG
T23 – Primary Containment
T48 – Primary Containment Purge and Inerting System
W33 - Traveling Water Screens/Trash Racks

The Unit 1 inspections will be performed on or after August 6, 2009, but before midnight August 6, 2014. The Unit 2 inspections will be performed on or after June 13, 2013, but before midnight June 13, 2018.

**Preventive or Mitigative Actions**

*(Preventive actions to mitigate or prevent aging degradation.)*

The Galvanic Susceptibility inspections will be a condition monitoring activity that utilizes various inspection methods to identify unacceptable corrosion within the selected weld couplings. As such, there are no preventive or mitigative attributes associated with this program.

**Parameters Inspected or Monitored**

*(Parameters inspected or monitored are linked to the degradation of the particular intended function.)*

The sample set will be selected from raw water carbon to stainless connections. Examination results will be evaluated to determine whether the sample set should be expanded to other environments. Inspection locations will be based on engineering judgement and will include areas predicted to be most susceptible.

The sample size of each examination method will be a function of the sample locations and the aging effect that is suspected. All types of in-scope components will be represented in the sample population, such as piping, fittings, tubing, valves, pumps, welds, etc. as applicable to the susceptibility to the aging mechanism.

**Detection of Aging Effects**

*(The method of detection of the aging effects is described and performed in a timely manner).*

Piping inspections will be performed using one or more methods. These may include visual, ultrasonic thickness determinations, radiographic testing, depth gauges, and pipe removal and analysis. Inspections may utilize an examination method similar to that described for VT-1 in ASME Section XI, paragraph IWA-2210.

Inspection procedures and acceptance criteria will be developed using the applicable sections of the design codes. Where applicable, minimum wall thickness will be calculated in accordance with the piping design code, piping stress requirements, and the piping specification drawings.

**Monitoring and Trending**

*(Monitoring and trending provide for timely corrective actions.)*

The Galvanic Susceptibility Inspection will be a one-time inspection designed to verify that galvanic corrosion is not occurring in passive components within the scope of license renewal. As such, trending is not required.

**Acceptance Criteria**

*(Acceptance criteria are included.)*

Any unacceptable indication of loss of material will be evaluated by further engineering analysis and, if warranted, additional inspections will be performed. Corrective actions, if required, will be addressed through the existing Plant Hatch corrective actions program.

**Operating Experience**

*(Operating experience of the aging management program, including past corrective actions resulting in program enhancements or additional programs, is considered.)*

The Galvanic Susceptibility Inspection will be a one-time inspection activity. As such there is no operating experience directly associated with this inspection.

However, a review of plant deficiency cards submitted over the past five years found no deficiencies in the in-scope components related to loss of material due to galvanic corrosion.

**References**

1. *ASME Boiler and Pressure Vessel Code.*

### B.3.2 Treated Water Systems Piping Inspections

The treated water systems piping inspections will be one time condition monitoring examinations intended to prove that existing chemistry control is managing aging in piping that is not examined under another inspection program.

**Program Scope**

*(Scope of the program includes the specific structure, component, or commodity for the identified aging effect. Specific commodities include, but not limited to, carbon and stainless steel piping, tubing, valve bodies, pump casings, tanks, accumulators and strainer bodies.)*

Portions of the following systems are included within the scope of this program:

B21 - Nuclear Boiler
B31 - Reactor Recirculation
C11 - CRD
C41 - SLC
E11 - RHR
E21 - Core Spray
E41 - HPCI
E51 - RCIC
N32 - Main Turbine Auxiliaries
N61 - Main Condenser and Auxiliaries
P11 - Condensate Storage and Transfer
P42 - RBCCW
P64 - PCCW
R43 - EDG Auxiliaries
T23 - Primary Containment
T48 - Primary Containment Purge and Inerting System

Note: Portions of B21 included in the scope of this program include both large-bore pipe and small-bore butt-welded stainless steel pipe.

The Unit 1 inspections will be performed on or after August 6, 2009, but before midnight August 6, 2014. The Unit 2 inspections will be performed on or after June 13, 2013, but before midnight June 13, 2018.

**Preventive or Mitigative Actions**

*(Preventive actions to mitigate or prevent aging degradation.)*

The treated water systems inspections will be condition monitoring activities which utilize visual inspections to identify unacceptable age related degradation within the applicable systems. Therefore, there are no preventive or mitigative attributes associated with this program.

**Parameters Inspected or Monitored**

*(Parameters inspected or monitored are linked to the degradation of the particular intended function.)*

These one time inspections will focus on determining whether there has been loss of material from, or cracking in, Class 1 and Non-Class 1 carbon and stainless steels within the reactor water, the torus water, the demineralized water, closed cooling water, and borated water environments.

Inspection locations will be based on engineering judgement and will include areas predicted to be most susceptible to corrosion, erosion-corrosion, erosion, and cracking.

**Detection of Aging Effects**

*(The method of detection of the aging effects is described and performed in a timely manner).*

A one-time visual inspection of the sample set will be conducted using the best available examination method for the inspected component. Inspections may utilize an examination method similar to that described for VT-1 in ASME Section XI, paragraph IWA-2210. Where possible and practical, accessible components may be inspected using volumetric examination methods.

**Monitoring and Trending**

*(Monitoring and trending provide for timely corrective actions.)*

If components do not meet the acceptance criteria defined in the inspection procedure, they will be evaluated, repaired or replaced prior to return to service. If a significant number of the initial sample population fail to meet the acceptance criteria, the sample population may be increased. If the applicable acceptance criteria are met for the sample population, expansion of the sample set will not be necessary.

Periodic monitoring and trending of degradation for inspection locations will be established provided the one-time inspection results indicate a concern that components may not be able to perform their intended function during the extended operation.

Failures will be required by plant procedures to be documented in accordance with the Plant Hatch corrective actions program.

**Acceptance Criteria**

*(Acceptance criteria are included.)*

Any unacceptable indication of corrosion will be evaluated by further engineering analysis. Component wall thickness acceptability will be based upon the component design code of record. Cracks identified via visual examinations shall be further inspected via volumetric examinations for evaluation by engineering analysis. Corrective actions, if required, will be addressed through the existing Plant Hatch corrective actions program.

## Operating Experience

*(Operating experience of the aging management program, including past corrective actions resulting in program enhancements or additional programs, is considered.)*

The treated water system piping inspections will be a one-time activity. Thus, there is no operating experience directly associated with the treated water system piping inspection. However, a review of plant deficiency cards submitted over the past five years revealed no significant deficiencies in the in-scope treated water components due to age related degradation.

## References

1. *ASME Boiler and Pressure Vessel Code.*

### B.3.3 Gas Systems Components Inspections

The Gas Systems Component Inspections (GSCI) will be a set of one-time condition monitoring inspections designed to confirm that age-related degradation is not inhibiting component function in gas-bearing in-scope systems and components.

**Program Scope**

*(Scope of the program includes the specific structure, component, or commodity for the identified aging effect.)*

Portions of the following systems are included within the scope of the GSCI:

B21 – Nuclear Boiler (In scope Safety Relief Valve Tailpipes to the Torus)
C11 – CRD
E11 – RHR
E41 – HPCI
E51 – RCIC
P33 – Sampling
R43 – EDG (Starting Air and Engine Exhaust)
T23 – Primary Containment
T41 – Reactor Building HVAC
T46 – Standby Gas Treatment
T48 – Primary Containment Purge and Inerting
T49 – Post LOCA Hydrogen Recombiners
X41 – Outside Structure HVAC
Y52 – Fuel Oil
Z41 – Control Building HVAC

A sample population of components exposed to humid and wetted gas internal environments at various temperatures will be inspected. The sample population will focus on those locations in the in-scope components where liquid pooling or wet/dry cycling is most likely to occur during normal operation. In addition, certain external surfaces in gas bearing components of the R43, X41, and Z41 systems will be included in the sample populations. The process by which the sample population is developed will ultimately determine the actual scope of the inspections.

The Unit 1 inspections will be performed on or after August 6, 2009, but before midnight August, 2014. The Unit 2 inspections will be performed on or after June 13, 2013, but before midnight June 13, 2018.

**Preventive or Mitigative Actions**

*(Preventive actions to mitigate or prevent aging degradation.)*

The GSCI will be condition monitoring activities that utilize visual inspections and volumetric examinations to identify aging effects prior to any loss of intended function. As such, there are no preventive or mitigative attributes associated with this program.

**Parameters Inspected or Monitored**

*(Parameters inspected or monitored are linked to the degradation of the particular intended function.)*

The GSCI will primarily assure that component wall thickness has not degraded such that component function is inhibited.

**Detection of Aging Effects**

*(The method of detection of the aging effects is described and performed in a timely manner).*

The GSCI will include a sample population of the in-scope components and will use visual inspection techniques (similar to that described for VT-1 in ASME Section XI, paragraph IWA-2210) to detect corrosion. Where possible and practical, accessible components may be inspected for stress corrosion cracking using volumetric examination methods.

**Monitoring and Trending**

*(Monitoring and trending provide for timely corrective actions.)*

The GSCI will be one-time inspections designed to confirm that aging effects have not inhibited the functions of the inspected components. As such, no trending will be performed in these inspections.

**Acceptance Criteria**

*(Acceptance criteria are included.)*

Any unacceptable indication of corrosion will be evaluated by further engineering analysis. Component wall thickness acceptability will be based upon the component design code of record. Corrective actions, if required, will be addressed through the existing Plant Hatch Corrective Actions Program.

**Operating Experience**

*(Operating experience of the aging management program, including past corrective actions resulting in program enhancements or additional programs, is considered.)*

The GSCI will be a new set of inspections for Plant Hatch. As such there is no operating experience directly associated with the GSCI.

However, a review of plant deficiency cards submitted over the past five years showed that no age-related deficiencies that inhibited component function have been written on components within the scope of GSCI.

**References**

1. *ASME Boiler and Pressure Vessel Code.*

### B.3.4 Condensate Storage Tank Inspection

The CST Inspection will be a one-time condition monitoring inspection of each CST designed to provide objective evidence that no unacceptable degradation is occurring. This inspection is intended to validate the adequacy of current demineralized water chemistry controls to manage aging effects.

**Program Scope**

*(Scope of the program includes the specific structure, component, or commodity for the identified aging effect.)*

The CSTs are part of P11 (Condensate Transfer and Storage). Only those CST components required to ensure the availability of 100,000 gallons of water for HPCI and RCIC system operation are within the scope of license renewal and therefore the CST Inspection.

The Unit 1 inspection will be performed on or after August 6, 2009, but before midnight August, 2014. The Unit 2 inspection will be performed on or after June 13, 2013, but before midnight June 13, 2018.

**Preventive or Mitigative Actions**

*(Preventive actions to mitigate or prevent aging degradation.)*

The CST inspection will be a condition monitoring activity that utilizes visual inspections to identify unacceptable corrosion within the CSTs. As such, there are no preventive or mitigative attributes associated with this program.

**Parameters Inspected or Monitored**

*(Parameters inspected or monitored are linked to the degradation of the particular intended function.)*

The Unit 1 CST is fabricated from aluminum alloy structural shapes, pipe, and plate. Nozzle flanges on the Unit 1 CST are fabricated from galvanized carbon steel. Visual inspection on the Unit 1 tank will focus on selected areas associated with the standpipes, associated supports, and nozzles.

The Unit 2 CST is fabricated entirely from austenitic stainless steel. Visual inspection on the Unit 2 tank will focus on selected areas associated with the standpipes, associated supports, and nozzles.

Inspection locations will be based on engineering judgement and will include areas predicted to be most susceptible to corrosion such as weld heat affected zones and crevices.

**Detection of Aging Effects**

*(The method of detection of the aging effects is described and performed in a timely manner).*

The CST Inspection will utilize visual inspection techniques (similar to that described for VT-1 in ASME Section XI, paragraph IWA-2210) to detect corrosion.

**Monitoring and Trending**

*(Monitoring and trending provide for timely corrective actions.)*

The CST Inspection will be a one-time inspection designed to validate the adequacy of demineralized water chemistry control in minimizing corrosion. As such, trending will not be required.

**Acceptance Criteria**

*(Acceptance criteria are included.)*

Any unacceptable indication of corrosion will be evaluated by further engineering analysis and, if warranted, additional inspections will be performed. Corrective actions, if required, will be addressed through the existing Plant Hatch corrective actions program.

**Operating Experience**

*(Operating experience of the aging management program, including past corrective actions resulting in program enhancements or additional programs, is considered.)*

The CST Inspection will be a one-time inspection activity. As such there is no operating experience directly associated with the CST Inspection. However, a review of plant deficiency cards submitted over the past five years found no age-related deficiencies of in scope CST surfaces.

**References**

1. *ASME Boiler and Pressure Vessel Code.*

### B.3.5 Passive Components Inspection Activities

The PCIA will be a set of on-going condition monitoring inspections designed to confirm that age-related degradation is not inhibiting component function predominantly in gas-bearing in-scope systems and components. Piping and valves between the drywell sump and the liquid radwaste system are also included in the scope of the PCIA. These pipes and valves serve as part of the primary containment and are not otherwise in-scope for license renewal. The PCIA will also be used for aging management of gaskets associated with the Control Building HVAC system. The PCIA will be invoked when the normally inaccessible surfaces of these components are made available for inspection due to maintenance and other activities.

**Program Scope**

*(Scope of the program includes the specific structure, component, or commodity for the identified aging effect.)*

Portions of the following systems are included within the scope of the PCIA:

B21 – Nuclear Boiler (In-scope Safety Relief Valve Tailpipes to the Torus)
C11 – CRD
E11 – RHR
E41 – HPCI
E51 – RCIC
R43 – EDG (Starting Air and Engine Exhaust)
T23 – Primary Containment (Including the Drain Lines for the Drywell Sump Discharge)
T41 – Reactor Building HVAC
T46 – Standby Gas Treatment
T48 – Primary Containment Purge and Inerting
T49 – Post LOCA Hydrogen Recombiners
X41 – Outside Structure HVAC
Y52 – Fuel Oil
Z41 – Control Building HVAC (Including gaskets)

When in-scope components are scheduled for maintenance, an evaluation will be performed to determine if the normally inaccessible surfaces should be inspected for the effects of aging. The preferred inspection sites will be those locations in the in-scope components where liquid pooling or wet/dry cycling is most likely to occur during normal operation.

**Preventive or Mitigative Actions**

*(Preventive actions to mitigate or prevent aging degradation.)*

The PCIA will be condition monitoring activities that utilize visual inspections and volumetric examinations to identify aging effects prior to any loss of intended function. As such, there are no preventive or mitigative attributes associated with these activities.

**Parameters Inspected or Monitored**

*(Parameters inspected or monitored are linked to the degradation of the particular intended function.)*

For metallic components, the PCIA will primarily ensure that component wall thickness has not degraded such that component function is inhibited. For gaskets, the PCIA will inspect for the presence of cracks or degradation.

**Detection of Aging Effects**

*(The method of detection of the aging effects is described and performed in a timely manner).*

The PCIA will include a baseline examination of the in-scope components, as they become available due to normal maintenance activities. The PCIA will use visual inspection techniques (similar to that described for VT-1 in ASME Section XI, paragraph IWA-2210) to detect corrosion of metallic components and material property changes and cracking of gaskets. Where possible and practical, accessible components may be inspected for stress corrosion cracking using volumetric examination methods.

**Monitoring and Trending**

*(Monitoring and trending provide for timely corrective actions.)*

The PCIA will be designed to collect, report, and trend age-related data. These inspections are a further prudent measure that will assist in the early discovery of aging effects so that corrective actions may be taken before the effects inhibit component functions.

PCIA is based on availability, not population. As such, population, frequency, and sample size are not pre-determined

**Acceptance Criteria**

*(Acceptance criteria are included.)*

Any unacceptable indication of corrosion will be evaluated by further engineering analysis. Component wall thickness acceptability will be based upon the component design code of record. If the gaskets exhibit changes in material properties or cracking, then corrective action will be taken. Corrective actions, if required, will be addressed through the existing Plant Hatch Corrective Actions Program.

**Operating Experience**

*(Operating experience of the aging management program, including past corrective actions resulting in program enhancements or additional programs, is considered.)*

The PCIA will be a new set of inspections for Plant Hatch. As such there is no operating experience directly associated with the PCIA.

However, a review of plant deficiency cards submitted over the past five years showed that no age-related deficiencies that inhibited component function have been written on components within the scope of PCIA.

**References**

1. *ASME Boiler and Pressure Vessel Code.*

### B.3.6 RHR Heat Exchanger Augmented Inspection And Testing Program

The Plant Hatch RHR Heat Exchanger Augmented Inspection and Testing Program is a condition monitoring program that includes both existing and enhanced activities to manage aging of shell and tube sides of the Unit 1 and Unit 2 RHR Heat Exchangers.

The program partially satisfies the requirements of Nuclear Regulatory Commission Generic Letter 89-13, July 18, 1989. SNC used the guidance of SAND 93-7070. UC-523, *Aging Management Guideline for Commercial Nuclear Power Plants - Heat Exchangers* (July 1994), as supplemented by reviews of current industry experience and practice, as the basis for this program.

**Program Scope**

*(Scope of the program includes the specific structure, component, or commodity for the identified aging effect.)*

The subject program will inspect, test, and/or maintain passive components of the Unit 1 and 2 RHR Heat Exchangers that are within the scope of the license renewal. These components are part of the following system:

E11 – Residual Heat Removal

**Preventive or Mitigative Actions**

*(Preventive actions to mitigate or prevent aging degradation.)*

The existing activity requires that heat exchanger tubes and channel interior be cleaned at a periodic basis, every 3 cycles. This cleaning of the heat exchanger tubes and channel head mitigates flow blockage and loss of thermal performance by keeping debris out of the tubes and channel interior.

**Parameters Inspected or Monitored**

*(Parameters inspected or monitored are linked to the degradation of the particular intended function.)*

Parameters inspected or monitored are the following: loss of material, flow area reduction due to fouling, and cracking. These parameters are linked to the degradation of component intended function.

**Detection of Aging Effects**

*(The method of detection of the aging effects is described and performed in a timely manner).*

The following existing activities at prescribed frequencies will be continued to detect aging effects of the heat exchanger passive components.

Visual inspection of channel side (including partition plate and tube sheet) and tube interior is performed every three cycles. The frequency may be changed based on the

trend and engineering evaluation. This activity will detect loss of material, flow blockage (fouling), and cracking.

The following new activities will be performed at prescribed frequencies to augment the existing activities. These new activities will be fully implemented no later than midnight August 6, 2014 and midnight June 13, 2018 for Units 1 and 2, respectively.

Eddy Current Testing will be performed at least once during each 10-year inspection interval and whenever leaks are suspected in tubes and/or tube sheet. This activity will detect loss of material, cracking and flow blockage (fouling).

The shell side of the tube sheets, shell internals, and impingement plates will be visually inspected once per 10-year inspection interval, where accessible. This activity will detect loss of material, flow blockage (fouling), and cracking.

Tube and tube sheet leak testing will be performed whenever leaks are suspected. This activity will detect leaks due to cracking and loss of material.

**Monitoring and Trending**

*(Monitoring and trending provide for timely corrective actions.)*

If the monitored parameters in the inspection locations fall below acceptance criteria, repair and/or replacement is performed prior to the system returning to service unless an engineering analysis allows further operation. Corrective actions are implemented per plant Corrective Actions Program. The frequency of the inspection or test may be adjusted based on observed trends of the monitored parameters.

**Acceptance Criteria**

*(Acceptance criteria are included.)*

The measured or recordable values of the inspected or monitored parameters shall not fall below the acceptable values for inspection locations as defined by the program. All measured or recordable values are reviewed by engineering against appropriate acceptance criteria for proper disposition. The bases for acceptance criteria are documented.

**Operating Experience**

*(Operating experience of the aging management program, including past corrective actions resulting in program enhancements or additional programs, is considered.)*

A review of the condition reporting database revealed one significant event for RHR Heat Exchangers. During 1996, a sample taken from a RHRSW drain valve contained the presence of nuclides. A root cause investigation and subsequent helium leak test and eddy current testing performed on the 1E11-B001B RHR heat exchanger identified possible leakage in nine heat exchanger tubes. One was a known leaker and the other eight were suspected leakers. Subsequent inspection of the tube bundle revealed that, other than the leaking tubes, the tube bundle was in good condition and suitable for

continued service. Subsequently, the nine leaking or suspected leaking tubes were plugged.

In addition, dents were noted at the tube to tube support connections of many tubes and may have been indicative of tube vibration. However, since no exact cause for the tube leakage was identified, the isolated damage could also be due to mill flaws or defects created during bundle assembly or installation and not related to any aging effect. The damaged areas are minor in nature and no subsequent corrective actions were required.

Eddy current testing performed on 1E11-B001A during Spring 1999 and on 2E11-B001B during September/October 1998, did not identify any significant deterioration of the tubes. No tube leaks for other RHR heat exchangers occurred during the five-year period under consideration.

**References**

1. *Nuclear Regulatory Commission Generic Letter 89-13, July 18, 1989.*

2. *SAND93-7070 – Aging Management Guideline for Commercial Nuclear Power Plants – Heat Exchangers, June 1994.*

### B.3.7 Torus Submerged Components Inspection Program

The Torus Submerged Components Inspection Program is a condition monitoring activity designed to provide objective evidence that no unacceptable degradation is occurring. This inspection is intended to validate the adequacy of current suppression pool chemistry controls to manage aging effects.

**Program Scope**

*(Scope of the program includes the specific structure, component, or commodity for the identified aging effect.)*

Portions of the following systems are within the scope of the Torus Submerged Components Inspection Program:

B21 – Nuclear Boiler
E11 – RHR
E21 – Core Spray
E41 – HPCI
E51 – RCIC
T48 – Primary Containment Purge and Inerting

Components and structures inspected by the Torus Submerged Components Inspection Program include emergency core cooling system suction strainers, reactor core isolation cooling system suction strainers, submerged portions of safety relief valve piping, ECCS turbine steam exhaust piping, and vacuum relief piping.

(The Torus Submerged Components Inspection Program will be implemented by midnight August 6, 2014 for Unit 1, and midnight June 13, 2018 for Unit 2.)

**Preventive or Mitigative Actions**

*(Preventive actions to mitigate or prevent aging degradation.)*

The Torus Submerged Components Inspection Program is a condition monitoring activity that utilizes visual inspections to identify unacceptable corrosion on components submerged within the suppression pool. As such, there are no preventive or mitigative attributes associated with this program.

**Parameters Inspected or Monitored**

*(Parameters inspected or monitored are linked to the degradation of the particular intended function.)*

Uncoated components and structures submerged within the suppression pool and in the vapor space directly above the suppression pool will be visually inspected for indications of corrosion by the Torus Submerged Components Inspection Program. Inspection locations will be based on engineering judgement and will include areas predicted to be most susceptible to corrosion such as weld heat affected zones and crevices.

**Detection of Aging Effects**

*(The method of detection of the aging effects is described and performed in a timely manner).*

The Torus Submerged Components Inspection Program will utilize visual inspection techniques (similar to that described for VT-1 in ASME Section XI, paragraph IWA-2210) to detect corrosion.

**Monitoring and Trending**

*(Monitoring and trending provide for timely corrective actions.)*

Results of Torus Submerged Components Inspection Program inspections will be documented in accordance with Plant Hatch procedural requirements. The Plant Hatch corrective actions program will be utilized to monitor and trend deficiencies and to implement timely corrective actions. A baseline examination will be performed for each unit prior to entering the period of extended operation. The scope and frequency of any subsequent examinations will be based on the results of these baseline inspections and any additional past operating experience available.

**Acceptance Criteria**

*(Acceptance criteria are included.)*

Any unacceptable indication of corrosion will be evaluated by further engineering analysis and, if warranted, additional inspections will be performed. Corrective actions, if required, will be addressed through the existing Plant Hatch corrective actions program.

**Operating Experience**

*(Operating experience of the aging management program, including past corrective actions resulting in program enhancements or additional programs, is considered.)*

The Torus Submerged Components Inspection Program is a new program with no existing operating experience. However, results of recent inspections in the Torus, conducted as a part of the protective coatings program, did not identify any significant degradation due to corrosion.

**References**

1. *ASME Boiler and Pressure Vessel Code.*

### B.3.8 Insulated Cables And Connections Aging Management Program

The Insulated Cables and Connectors Aging Management Program is a condition monitoring program designed to confirm that age-related degradation is not inhibiting component function of insulated cables and connectors within the scope of license renewal during the period of extended operation.

**Program Scope**

*(Scope of the program includes the specific structure, component, or commodity for the identified aging effect.)*

The Insulated Cables and Connections Aging Management Program includes accessible and inaccessible insulated cables within the scope of license renewal that are installed in adverse, localized environments in the Primary Containment Structure, Reactor Building, Radwaste Building, Diesel Generator Building, Turbine Building, Control Building, Intake Structure, and Main Stack, which could be subject to applicable aging effects from heat or radiation. This progam does not include cables and connections that are in the Environmental Qualification program. An adverse, localized environment is defined as a condition in a limited plant area that is significantly more severe than the specified service condition for the equipment. An applicable aging effect is an aging effect that, if left unmanaged, could result in the loss of a component's license renewal intended function in the period of extended operation.

**Preventive or Mitigative Actions**

*(Preventive actions to mitigate or prevent aging degradation.)*

The methods used are different for accessible insulated cables and connections and for inaccessible insulated cables and connections, which cannot be visually inspected.

Accessible insulated cables and connections installed in adverse, localized environments will be visually inspected for jacket surface anomalies such as embrittlement, discoloration, cracking or surface contamination. Surface anomalies are indications that can be visually monitored to preclude the conductor insulation applicable aging effect.

Inaccessible insulated cables and connections will be tested. The specific type of test performed will be determined prior to each test.

**Parameters Inspected or Monitored**

*(Parameters inspected or monitored are linked to the degradation of the particular intended function.)*

Change in material properties of the conductor insulation is the applicable aging effect. The changes in material properties managed by this program are those caused by severe heat or radiation – conditions that establish an adverse, localized environment.

**Detection of Aging Effects**

*(The method of detection of the aging effects is described and performed in a timely manner).*

Accessible insulated cables and connections installed in adverse, localized environments will be inspected at least once every 10 years.

Inaccessible cables and connections will be tested at least once every 10 years.

Samples may be used for this program. If used, an appropriate sample size will be determined prior to the inspection or test.

Following issuance of a renewed operating license for Plant Hatch, the initial inspections and tests will be completed by the end of the initial license term for each unit (August 6, 2014 for unit 1 and June 13, 2018 for unit 2).

**Monitoring and Trending**

*(Monitoring and trending provide for timely corrective actions.)*

For accessible and inaccessible insulated cables and connections, the monitoring and trending activities will be defined by the specific type of inspection or test to be performed.

Plant procedures require that deficiencies discovered during the performance of the program activities be documented in accordance with the condition reporting process. Corrective action, as described in Chapter 17 of the Unit 2 FSAR is part of the Plant Hatch Quality Assurance (QA) Program.

**Acceptance Criteria**

*(Acceptance criteria are included.)*

The acceptance criteria is different for accessible insulated cables and connections and for inaccessible insulated cables and connections.

For accessible insulated cables and connections installed in adverse, localized environments, the acceptance criterion is no unacceptable, visual indications of jacket surface anomalies, which suggest that conductor insulation applicable aging effects may exist, as determined by engineering evaluation. An unacceptable indication is defined as a noted condition or situation that, if left unmanaged, could lead to a loss of the license renewal intended function.

For inaccessible insulated cables and connections, the acceptance criteria for the test will be defined by the specific type of test to be performed and the specific type cable to be tested.

### Corrective Actions

Further investigation by engineering will be performed on accessible and inaccessible insulated cables and connections when the acceptance criteria are not met, in order to ensure that the license renewal intended functions will be maintained consistent with the current licensing basis. Corrective actions may include, but are not limited to, testing, shielding or otherwise changing the environment, relocation or replacement. Specific corrective actions will be implemented in accordance with the Corrective Actions Program. The Corrective Actions Program applies to all structures and components within the scope of the Insulated Cables and Connections Aging Management Program. When an unacceptable condition or situation is identified, a determination will be made as to whether this same condition or situation could be applicable to other accessible or inaccessible insulated cables and connections.

### Confirmation Process

The confirmation will ensure that preventive actions are adequate and that appropriate corrective actions have been completed and are effective. For accessible and inaccessible insulated cables and connections, the confirmation process will be defined by the specific type of inspection or test to be performed.

### Administrative Controls

Administrative controls will provide a formal review and approval process. For accessible and inaccessible insulated cables and connections, the administrative controls process will be defined by the specific type of inspection or test to be performed.

### Operating Experience

*(Operating experience of the aging management program, including past corrective actions resulting in program enhancements or additional programs, is considered.)*

The Corrective Actions Program provides for evaluation of aging effects and significant operating events and requires that reasonable actions be taken to enhance programs and activities to prevent future occurrences.

ENCLOSURE 4

# EDWIN I. HATCH NUCLEAR PLANT

DOCKETS 50-321, 50-366

OPERATING LICENSES DPR-57, NPF-5

## FSAR SUPPLEMENT

## LICENSE RENEWAL DOCUMENTATION

SEPTEMBER 5, 2001

## TABLE OF CONTENTS

**Chapter 18 AGING MANAGEMENT PROGRAMS/ACTIVITIES**

18.1 Introduction

18.2 Existing Programs/Activities

18.2.1 Reactor Water Chemistry Control
18.2.2 Closed Cooling Water Chemistry Control
18.2.3 Diesel Fuel Oil Testing
18.2.4 Plant Service Water And RHR Service Water Chemistry Control
18.2.5 Fuel Pool Chemistry Control
18.2.6 Demineralized Water And Condensate Storage Tank Chemistry Control
18.2.7 Suppression Pool Chemistry Control
18.2.8 Corrective Actions Program
18.2.9 Inservice Inspection Program
18.2.10 Overhead Crane And Refueling Platform Inspections
18.2.11 Torque Activities
18.2.12 Component Cyclic Or Transient Limit Program
18.2.13 Plant Service Water And RHR Service Water Inspection Program
18.2.14 Primary Containment Leakage Rate Testing Program
18.2.15 Boiling Water Reactor Vessel And Internals Program
18.2.16 Wetted Cable Activities
18.2.17 Reactor Pressure Vessel Materials Surveillance Program
18.2.18 Program Diesel Generator Maintenance Activities

18.3 Enhanced Programs/Activities

18.3.1 Fire Protection Activities
18.3.2 Flow Accelerated Corrosion Program
18.3.3 Protective Coatings Program
18.3.4 Equipment And Piping Insulation Monitoring Program
18.3.5 Structural Monitoring Program

18.4 New Programs/Activities

18.4.1 Galvanic Susceptibility Inspections
18.4.2 Treated Water Systems Piping Inspections
18.4.3 Gas Systems Components Inspections
18.4.4 Condensate Storage Tank Inspection
18.4.5 Passive Components Inspection Activities
18.4.6 RHR Heat Exchanger Augmented Inspection And Testing Program
18.4.7 Torus Submerged Components Inspection Program
18.4.8 Insulated Cables and Connections Program

18.5 Time Limited Aging Analyses Credited for License Renewal

18.5.1 Time Limited Aging Analyses

18.6 References

## LIST OF TABLES


| Table No. | Table Title |
|---|---|
| 18.3.1-1 | Activities Performed to Manage Aging Effects for Fire Protection System Components |
| 18.5-1 | Summary Listing of Calculations and Analyses Meeting the Six Time Limited Aging Analyses Criteria |

# 18.0 AGING MANAGEMENT PROGRAMS/ACTIVITIES

## 18.1 INTRODUCTION

As part of the process of obtaining a renewed operating license, Southern Nuclear was required to demonstrate to the Nuclear Regulatory Commission that the aging effects determined to be applicable to in-scope systems, structures and components at Plant Hatch are adequately managed during the renewal term. The following program and activity descriptions represent the Plant Hatch commitments for managing aging of the in-scope systems, structures and components during the period of extended operation.

In many cases, existing programs and activities were found adequate for managing aging in the renewal term. In some cases, aging management reviews revealed that programs or activities required some degree of enhancement to adequately manage aging. Lastly, a number of new inspections were developed to provide objective evidence that aging was, in fact, being adequately managed by the credited programs and activities. The scope of these programs and activities for license renewal is determined by the scope of components and application of programs and activities as defined within the license renewal application and subsequent updates under 10 CFR 54.37(b).

It is important to note that only a portion of certain programs or activities may be required to manage aging during the renewal term. Accordingly, only the portion to which a commitment is made in this chapter is credited for license renewal. The systems, structures and components within the scope of license renewal are those within the evaluation boundaries.

Further, multiple programs or activities may be credited to manage aging in a single system, structure or component. Conversely, there are also cases where one program or activity may manage the effects of aging in multiple systems.

Except where otherwise stated, the portions of programs and activities credited for aging management are applicable to both units. Each management method presented in this section will be characterized as one of the following:

- Existing Program (Activity): A current term program or activity that will continue to be implemented during the period of extended operation.

- Enhanced Program (Activity): A current term program or activity that will be modified to manage aging during the renewal term. Enhancements will be implemented as shown in this chapter.

- New Program (Activity): A program or activity that did not exist in current term but was created as part of the license renewal process, which will manage aging during the renewal term. These programs or activities will be implemented for the renewal term as shown in this chapter.

Current term is defined as the term of the original operating license. Renewal term is defined as the period of operation beginning with receipt of the renewed operating license and ending sixty years from the effective date of the original, current term license. The period of extended operation is defined as the time period from expiration of the original, current term license to expiration of the renewed license.

Characterization of a program or activity as new or existing is self-explanatory. For enhanced programs or activities, the substance of the enhancement is summarized in the text.

Time-Limited Aging Analyses

10CFR54 (the Rule) requires that time limited aging analyses (TLAA) be evaluated to capture certain plant-specific aging analyses explicitly based on the original 40 year operating life of the plant. In addition, the Rule requires that any exemptions, based on TLAAs, be identified and analyzed to justify extension of those analyses through the renewal term.

Summary descriptions of TLAAs are provided in Section 18.5.

## 18.2 EXISTING PROGRAMS/ACTIVITIES

### 18.2.1 REACTOR WATER CHEMISTRY CONTROL

Reactor Water Chemistry Control is a mitigating activity designed to manage loss of material and cracking by controlling fluid purity and composition. Control of reactor water chemistry is based on the guidance and standards provided within EPRI TR-103515[1].

#### A. Program Scope

Portions of the following systems, structures and components within the scope of license renewal are directly or indirectly monitored by reactor water chemistry control:

- reactor assembly
- nuclear boiler
- reactor recirculation
- high pressure coolant injection
- reactor core isolation cooling
- electro-hydraulic control
- main condenser auxiliaries

#### B. Preventive or Mitigative Actions

Reactor water chemistry control mitigates loss of material and cracking by minimizing the oxidizing power, or electrochemical corrosion potential, of the reactor water. Reactor coolant system chemistry standards are met through the use of filtration and ion exchange operations accomplished by powdered resin condensate polishers. Hydrogen injection and Noble Metal Chemical Application have been utilized to further reduce the electrochemical corrosion potential of the reactor coolant.

#### C. Parameters Inspected or Monitored

EPRI TR-103515 provides the basis for the reactor coolant chemistry parameters monitored to assure adequate chemistry control. Control parameters include coolant conductivity, sulfate concentrations, and chloride concentrations.

#### D. Detection of Aging Effects

Reactor water chemistry control is a mitigative activity not intended to directly detect age-related degradation of reactor assembly and reactor coolant system components.

#### E. Monitoring and Trending

EPRI TR-103515 provides guidelines for trending, tracking, and regular evaluations of reactor water chemistry parameters. During normal power operations, sulfates, chlorides, and conductivity are monitored in accordance with the guidance provided in EPRI TR-103515.

### F. Acceptance Criteria

Specific acceptance criteria are contained in EPRI TR-103515. Acceptance criteria vary based on plant operating conditions and the water chemistry mode currently in use (normal water chemistry or HWC).

## 18.2.2 CLOSED COOLING WATER CHEMISTRY CONTROL

Closed cooling water (CCW) chemistry control is a mitigating activity designed to manage loss of material by controlling fluid purity and composition. Control of CCW chemistry is based on the guidance provided within EPRI TR-107396[2].

### A. Program Scope

While CCW chemistry control is applicable to all closed cycle cooling water systems, only limited portions of CCW systems are within the scope of license renewal. Operation of these systems is not vital to the safe shutdown of the plant under normal or accident conditions. However, certain portions of these systems are in scope to maintain primary containment integrity. Portions of the following systems are included:

- reactor building closed cooling water
- primary containment chill water (applicable to Unit 2 only)

### B. Preventive or Mitigative Actions

Control of CCW chemistry manages loss of material through the use of corrosion inhibitor additions, biocide additions, and chemical additions to control pH. Concentrations of detrimental impurities are monitored. Should CCW chemistry parameters exceed the limitations established by the EPRI guidelines, appropriate corrective actions to minimize the potential for significantly increased corrosion rates and to restore closed cooling water purity will be taken.

### C. Parameters Inspected or Monitored

EPRI TR-107396 provides the basis for CCW chemistry chemical additions and monitoring to assure adequate chemistry control. This guideline provides several different treatment options and provides recommendations for applicable control parameters.

Control parameters include pH (proper pH reduces corrosion rates and increases corrosion inhibitor effectiveness) and corrosion inhibitor concentrations. Diagnostic parameters include biocide concentrations and microbe populations; concentrations of detrimental impurities such as ammonia, chloride, and sulfate; and conductivity.

Additionally, RBCCW system carbon steel corrosion coupons are analyzed periodically to verify the effectiveness of the corrosion inhibitor system.

### D. Detection of Aging Effects

CCW chemistry control is a mitigative activity and not intended to directly detect age-related degradation of components subjected to closed cooling water.

### E. Monitoring and Trending

EPRI TR-107396 provides guidelines for trending, tracking, and regular evaluations of closed cooling water chemistry parameters.

### F. Acceptance Criteria

Acceptance criteria for CCW chemistry control are based on the recommendations of EPRI TR-107396. This document specifies appropriate parameter limitations and analysis methods for adequate CCW chemistry control. EPRI TR-107396 contains recommended ranges and limitations for corrosion inhibitor concentrations, pH, and concentrations of detrimental impurities. In addition, bacteria populations are monitored to validate the effectiveness of biocide additions.

Carbon steel corrosion coupons are weighed periodically to assure that corrosion rates occurring within CCW systems are acceptable when evaluated against the EPRI TR-107396 target values.

## 18.2.3 DIESEL FUEL OIL TESTING

Diesel fuel oil testing is a mitigating activity designed to manage loss of material by monitoring fuel oil content for water and other contaminants.

### A. Program Scope

Diesel fuel oil testing applies to the emergency diesel generator fuel oil storage tanks, the diesel generator fuel oil day tanks, and the associated transfer piping and components. It additionally covers the in-scope fire pump diesel fuel oil storage tanks and the associated piping and components. The following systems within the scope of license renewal are monitored directly or indirectly by diesel fuel oil testing.

- fuel oil supply
- fire protection

### B. Preventive or Mitigative Actions

Diesel fuel oil testing activities mitigate loss of material by detecting intrusion of water or other contaminants to preclude loss of material due to corrosion. Program elements include sampling and analysis of new fuel prior to off loading to prevent contamination of stored fuel oil, and periodic sampling and analysis of stored fuel oil in storage and day tanks. Should the concentration of water or other contaminants exceed established acceptance criteria, appropriate actions to minimize the potential for significantly increased corrosion rates and reduce concentrations of water or other contaminants.

Additionally, biocide is added during the off loading of new fuel. The addition of a biocide, when properly controlled, minimizes the potential for microorganism growth and the potential for microbiologically influenced corrosion.

**C. Parameters Inspected or Monitored**

New fuel oil is sampled and analyzed for water and sediment content. Stored fuel oil is sampled and analyzed for water and sediment content and total particulate concentration.

**D. Detection of Aging Effects**

Diesel fuel oil testing is a mitigating activity not intended to directly detect age-related degradation of diesel fuel oil supply system components.

**E. Monitoring and Trending**

There are no monitoring or trending aspects associated with diesel fuel oil testing activities.

**F. Acceptance Criteria**

Stored fuel oil water and sediment and total particulate limits are established within the plant technical specifications and implementing procedures.

## 18.2.4 PLANT SERVICE WATER AND RHR SERVICE WATER CHEMISTRY CONTROL

Plant service water (PSW) and residual heat removal service water (RHRSW) chemical control activities are intended to reduce loss of material, loss of heat exchanger performance and flow blockage (fouling) with service water system components through a biocide application program based on the requirements of Generic Letter 89-13[3].

**A. Program Scope**

Portions of the following systems within the scope of license renewal undergo biocide additions:

- residual heat removal service water
- plant service water
- reactor building HVAC
- traveling screen wash (PSW isolation valve only)
- control building HVAC

**B. Preventive or Mitigative Actions**

Sodium hypochlorite alone, or in conjunction with sodium bromide, is periodically injected into PSW to control biological growth in the service water systems. Additionally, this program is coordinated with the periodic operation of RHRSW to maximize chemical

treatment in this system. These biocide additions are intended to reduce loss of material, loss of heat exchanger performance and flow blockage (fouling).

**C. Parameters Inspected or Monitored**

During plant PSW system chlorination and bromination, free available oxidant concentration is periodically monitored at the PSW discharge to the circulating water flume to ensure program efficacy.

The Plant Hatch NPDES Permit[4] requires periodic monitoring of plant effluent to the Altamaha River for residual oxidant.

**D. Detection of Aging Effects**

PSW and RHRSW chemistry control is a mitigative activity not intended to directly detect age-related degradation of PSW and RHRSW system components.

**E. Monitoring and Trending**

Free available oxidant is monitored during the treatment cycle to provide reasonable assurance that sufficient biocide is being added to meet the system chlorine demand and result in an effective residual free available oxidant concentration.

Sample results also provide indication that the program is operated consistent with the requirements and limitations of the Plant Hatch NPDES permit.

**F. Acceptance Criteria**

During chlorination and bromination, the PSW effluent should indicate a free available oxidant concentration equal to, or exceeding, the limitations specified within implementing procedures.

In accordance with the Plant Hatch NPDES Permit, the final plant effluent to the Altamaha River is sampled to detect the presence of any residual oxidant. These sample results are reported to the State of Georgia Department of Natural Resources on a quarterly basis.

## 18.2.5 FUEL POOL CHEMISTRY CONTROL

Fuel pool chemistry control is a mitigating activity designed to maintain structural integrity, reliability, and availability of plant systems and components by controlling fluid purity and composition. Control of fuel pool chemistry is based on the guidance provided within EPRI TR-103515[1].

**A. Program Scope**

Fuel pool chemistry control activities are applicable to the spent fuel pool liners, spent fuel pool plugs, the spent fuel pool gate, the refueling canal, spent fuel pool storage racks (including restraints), miscellaneous steel inside the spent fuel pool, and portions of the leak chase system.

### B. Preventive or Mitigative Actions

Fuel pool chemistry control mitigates loss of material by minimizing detrimental ionic species and conductivity. Control of fuel pool chemistry is maintained through the use of filtration and ion exchange operations accomplished by filter / demineralizers. Should fuel pool water chemistry parameters exceed the limitations established by the EPRI guidelines, appropriate actions to minimize the potential for significantly increased corrosion rates and to restore fuel pool purity will be taken.

### C. Parameters Inspected or Monitored

EPRI TR-103515 provides the basis for fuel pool chemistry parameters monitored to assure adequate chemistry control. EPRI specified fuel pool chemistry diagnostic parameters include conductivity, chloride and sulfate concentrations, and total organic carbon content. In addition, pH and filterable solids content are monitored.

### D. Detection of Aging Effects

Fuel pool chemistry control is a mitigative activity not intended to directly detect age-related degradation of the fuel pool and associated internal structures.

### E. Monitoring and Trending

EPRI TR-103515 provides guidelines for trending, tracking, and regular evaluations of fuel pool chemistry parameters. Sulfate and chloride concentrations, conductivity, and total organic carbon content are monitored in accordance with the guidance provided in EPRI TR-103515. In addition, pH and filterable solids content are monitored.

### F. Acceptance Criteria

Specific acceptance criteria are contained within EPRI TR-103515.

## 18.2.6 DEMINERALIZED WATER AND CONDENSATE STORAGE TANK CHEMISTRY CONTROL

Demineralized water chemistry control is a mitigating activity designed to manage loss of material by controlling fluid purity and composition. Control of demineralized water chemistry is based on the guidance provided within EPRI TR-103515[1].

### A. Program Scope

Portions of the following systems within the scope of license renewal are directly or indirectly monitored by demineralized water chemistry control.

- nuclear boiler
- control rod drive
- standby liquid control
- high pressure coolant injection
- reactor core isolation cooling

- condensate transfer and storage
- service demineralized water (primary containment function)
- emergency diesel generator auxiliaries

**B. Preventive or Mitigative Actions**

Demineralized water chemistry control mitigates loss of material by minimizing detrimental ionic species and conductivity. The demineralizer system provides demineralized water to meet tank chemistry limitations through the use of filtration, ion exchange and degasification processes. Control of demineralized water chemistry parameters, within the CST and DWST, is not maintained by any type of control system, such as ion exchange or filtration. Should demineralized water chemistry parameters exceed the limitations established by the EPRI guidelines, appropriate corrective actions to minimize the potential for significantly increased corrosion rates and to restore demineralized water purity will be taken.

**C. Parameters Inspected or Monitored**

EPRI TR-103515 provides the basis for demineralized water chemistry parameters monitored to assure adequate chemistry control. EPRI specified demineralized water chemistry diagnostic parameters include conductivity, chloride and sulfate concentrations, total organic carbon content, and silica content. In addition, pH is monitored.

**D. Detection of Aging Effects**

Demineralized water chemistry control is a mitigative activity not intended to directly detect age-related degradation of systems and components exposed to a demineralized water environment.

**E. Monitoring and Trending**

EPRI TR-103515 provides guidelines for trending, tracking, and regular evaluations of demineralized water chemistry parameters. Chloride and sulfate concentrations, total organic carbon content, and silica content are monitored in accordance with the guidance provided in EPRI TR-103515. In addition, pH is monitored.

**F. Acceptance Criteria**

Specific acceptance criteria are contained within EPRI TR-103515.

## 18.2.7 SUPPRESSION POOL CHEMISTRY CONTROL

Suppression pool chemistry control is a mitigating activity designed to manage loss of material and cracking by controlling fluid purity and composition. Control of suppression pool chemistry is based on the guidance provided within EPRI TR-103515[1].

**A. Program Scope**

Portions of the following systems, structures and components within the scope of license renewal are directly or indirectly monitored by suppression pool chemistry control:

- nuclear boiler
- residual heat removal
- core spray
- high pressure coolant injection
- reactor core isolation cooling
- primary containment purge and inerting (vacuum relief piping)
- containment isolation components having torus penetrations below the water level
- torus internal structures and components

**B. Preventive or Mitigative Actions**

Suppression pool chemistry control mitigates loss of material and cracking by minimizing detrimental ionic species and conductivity. Control of suppression pool chemistry parameters is not maintained by any type of control system, such as ion exchange or filtration. Should suppression pool chemistry parameters exceed the limitations established by the EPRI guidelines, appropriate corrective actions to minimize the potential for significantly increased corrosion rates and to restore suppression pool purity will be taken.

**C. Parameters Inspected or Monitored**

EPRI TR-103515 provides the basis for suppression pool chemistry parameters monitored to ensure adequate chemistry control. EPRI specified suppression pool chemistry diagnostic parameters include conductivity (zinc corrected), chloride and sulfate concentrations, and total organic carbon content.

**D. Detection of Aging Effects**

Suppression pool chemistry control is a mitigative activity not intended to directly detect age-related degradation of components exposed to a suppression pool environment.

**E. Monitoring and Trending**

EPRI TR-103515 provides guidelines for trending, tracking, and regular evaluations of suppression pool water chemistry parameters. Zinc corrected conductivity, sulfate and chloride concentrations, and total organic carbon content are monitored in accordance with the guidance provided in EPRI TR-103515.

**F. Acceptance Criteria**

Specific acceptance criteria are contained within EPRI TR-103515.

## 18.2.8 CORRECTIVE ACTIONS PROGRAM

SNC has established and implemented a QA Program that conforms to the criteria set forth in 10 CFR 50, Appendix B[5]. The QA Program addresses all aspects of quality assurance at Plant Hatch.

The two elements of the QA Program that are most pertinent to the aging management programs credited for license renewal are corrective actions and administrative controls. These elements are discussed in Chapter 17, and are outlined below. Corrective action and administrative control requirements apply to all components within the scope of license renewal.

### A. Program Scope

The plant condition reporting process applies to all plant systems and components within the scope of license renewal. Administrative controls are in place for existing aging management programs and activities and for the currently required portions of enhanced programs and activities. Administrative controls will also be applied to new programs and activities as they are implemented. As a minimum, these programs and activities are or will be performed in accordance with written procedures. Those procedures are or will be reviewed and approved in accordance with Plant Hatch's 10 CFR 50, Appendix B, QA Program.

### B. Preventive or Mitigative Actions

There are no preventive or mitigative attributes associated with the corrective actions program that are credited for license renewal.

### C. Parameters Inspected or Monitored

No specific parameters are inspected or monitored as part of this program. Generally, when parameters inspected or monitored by other plant programs indicate a condition adverse to quality, the corrective actions program provides a means to correct the identified condition.

### D. Detection of Aging Effects

Detecting aging effects is not part of the corrective actions program. The corrective actions program provides a means to address the aging effects identified by other aging management activities.

### E. Monitoring and Trending

The corrective actions program does not monitor or trend aging effects. The corrective action program monitors corrective actions to assure identified conditions are addressed in a timely manner. Conditions that are identified as being adverse to quality are trended. Plant Hatch monitors significant conditions that are adverse to quality (significant occurrence reports) and requires a formal cause determination and corrective actions to prevent recurrence.

### F. Acceptance Criteria

The corrective actions program does not include specific acceptance criteria for aging effects. Generally, when the acceptance criteria of other aging management activities are not met, the corrective actions program provides a means to assure appropriate corrective actions are taken.

### G. Corrective Actions

The corrective action program is initiated following the determination of conditions adverse to quality, and documented as required by appropriate procedures. Various processes are used to identify problems requiring corrective action. The primary vehicle for initiating corrective action is the condition reporting process described in subsection 17.2.15.

The various components of the corrective action program provide for timely corrective actions, including root cause determination and prevention of recurrence. The QA program provides control over activities affecting the quality of systems, structures and components consistent with their importance to safety. In accordance with plant procedures, condition reports are analyzed for adverse trends. Any identified adverse trends are reported to the appropriate department for corrective action.

### H. Confirmation Process

As described subsection 17.2.15: condition reports are reviewed to determine the regulatory reportability and significance. Those items determined to be significant conditions adverse to quality (significant occurrence reports) are also reviewed by the Plant Review Board. Corrective actions taken for significant items are reviewed for assurance that appropriate action has been taken.

### I. Administrative Controls

Activities affecting quality are prescribed by documented instructions, procedures, or drawings of a type appropriate to the circumstances and are accomplished in accordance with these instructions, procedures, or drawings. They contain appropriate acceptance criteria and documentation requirements for determining whether important activities have been satisfactorily accomplished. Site procedures establish review and approval requirements.

## 18.2.9 INSERVICE INSPECTION PROGRAM

The inservice inspection (ISI) program is a condition monitoring program that provides for the implementation of ASME Section XI[6] in accordance with the provisions of 10 CFR 50.55a[7]. The ISI program also includes augmented examinations required to satisfy commitments made by SNC. The 10-year examination plan provides a systematic guide for performing required examinations. The period of extended operation will include the fifth and sixth inservice inspection intervals. Only a portion of the ISI program is credited for license renewal.

**A. Program Scope**

The ISI Program contains examination requirements and acceptance criteria for Class 1, 2, 3 (equivalent), and Class MC pressure boundary components, as well as associated supports.

For license renewal, the ISI program is credited for monitoring potential age-related degradation in portions of the following systems:

- reactor assembly
- nuclear boiler
- reactor recirculation
- residual heat removal service water
- plant service water
- primary containment
- containment penetrations

**B. Preventive or Mitigative Actions**

There are no preventive or mitigative attributes associated with this program.

**C. Parameters Inspected or Monitored**

The ISI program utilizes visual, surface and volumetric examinations to detect loss of material, cracking, and loss of preload.

**D. Detection of Aging Effects**

Three types of inspection methods are used for inservice examination. They are visual inspections, surface inspections, and volumetric inspections. Visual inspections are performed as defined in ASME Section XI paragraph IWA-2210, surface examinations are performed as defined in IWA-2220, and volumetric examinations are performed as defined in IWA-2230.

**E. Monitoring and Trending**

Deficiencies discovered during the performance of the program activities are documented in accordance with ISI program implementing procedures and are monitored in accordance with ASME Code requirements. The plant corrective actions program addresses deficiencies requiring repair or replacement.

**F. Acceptance Criteria**

Components not meeting the acceptance criteria defined in ASME Section XI, Tables IWB-2500-1, IWC-2500-1, IWD-2500-1, and IWE-2500 are evaluated, repaired, or replaced prior to return to service.

## 18.2.10 OVERHEAD CRANE AND REFUELING PLATFORM INSPECTIONS

The overhead crane and refueling platform inspection (OC&RPI) procedures were developed using ANSI B30.2.0-1976[8] and NUREG-0612[9]. Inspection procedures for fuel handling equipment were developed using ANSI B30.9-1971[10], ANSI/ASME B30.10-1982[11], ANSI N14.6-1978[12] and NUREG-0612.

The OC&RPI program ensures the overhead crane and refueling platform are capable of safely handling loads. The aging management review for passive structural elements identified one aging effect, loss of material due to corrosion, as requiring management. This program also satisfies the requirements of the Unit 1 Technical Requirements Manual, which requires surveillance testing of the 5-ton hoist and the crane/hoist, used for handling fuel assemblies or control rods.

### A. Program Scope

The OC&RPI program will perform inspections on the following systems that are within the scope of license renewal.

- Fuel and Control Rod Handling Equipment
- Refueling Floor Cranes and Hoists

### B. Preventive or Mitigative Actions

There are no preventive or mitigative attributes associated with this program.

### C. Parameters Inspected or Monitored

The OC&RPI provides for visual inspection of the contacting surfaces of the steel rails and the passive structural load bearing components of the overhead crane and refueling platform such as crane girder, rail and bolts. These inspections are intended to detect loss of material due to corrosion.

### D. Detection of Aging Effects

Visual inspections are performed to detect the loss of material.

### E. Monitoring and Trending

Inspection test results are maintained in plant records. Engineering personnel track and trend results in accordance with implementing procedures.

### F. Acceptance Criteria

Any unacceptable indication of loss of material will be evaluated by engineering. When appropriate, engineering evaluations will be based upon the design code of record. If warranted, additional inspections will be performed. Any significant degradation of components inspected by the OC&RPI is noted and corrective actions will be implemented in accordance with the corrective actions program.

## 18.2.11 TORQUE ACTIVITIES

Torque activities mitigate loss of preload through use of proper torque techniques. Plant procedures provide specific instructions for maximizing the effectiveness of torque activities. Torque activities are based on the guidance of EPRI NP-5769.[12] This EPRI document has been generally endorsed by the NRC in NUREG 1339.

Other codes and standards considered during development of the torquing procedure were ASME, Section VIII,[13] Div. 1, App. 2, ASME, Section II,[14] ASTM Standards,[15] Section 15, Volume 15.08, and ASME B31.1.[16]

### A. Program Scope

Torque activities are applicable to bolts, studs, nuts, and washers within systems in the scope of license renewal.

### B. Preventive or Mitigative Actions

The torque activities require that appropriate hardware is used in bolted connections. Additionally, proper torque techniques assure that adequate preload is applied to the connection. These attributes of the torque activities assure that loss of preload is mitigated.

### C. Parameters Inspected or Monitored

There are no parameters inspected or monitored with this activity.

### D. Detection of Aging Effects

There are no actions performed by this activity to detect aging effects.

### E. Monitoring and Trending

There are no trending or monitoring attributes associated with this activity.

### F. Acceptance Criteria

Any unacceptable indication of loss of preload will be evaluated by engineering. When appropriate, engineering evaluations will be based upon the design code of record. Any significant loss of preload is noted and corrective actions will be implemented in accordance with the corrective action program.

## 18.2.12 COMPONENT CYCLIC OR TRANSIENT LIMIT PROGRAM

The component cyclic or transient limit program (CCTLP) is a surveillance program required by Technical Specifications. It is a monitoring program designed to track cyclic and transient occurrences to assure that reactor coolant pressure boundary components and the torus will remain within the ASME Code Section III fatigue limits, including the effects of a reactor water environment.

Plant cycles and transients that significantly contribute to fatigue usage of Class 1 components have been identified. Periodically, each unit's operating records are reviewed to determine the number of design transients that have occurred since the last time cumulative usage factor (CUF) was calculated. Applying the actual cycles that have occurred to the formulas that represent design severity of cycles results in sufficient conservatism, including effects due to environmental factors, that cracking due to thermal fatigue is not expected as long as the CUF does not exceed 1.0.

**A. Program Scope**

The scope includes the reactor pressure vessel (RPV), the torus, and all Class 1 piping. The Unit 1 FSAR, section 4.2.5, and the Unit 2 FSAR, section 5.4.6.4, document the bounding RPV locations monitored. The four limiting high stress RPV boundary components are the RPV main closure studs, the RPV shell, the RPV recirculation inlet nozzles, and the RPV feedwater nozzles. The CCTLP also monitors the fatigue for the critical locations of the torus and Class 1 piping. For Unit 1, the Class 1 piping locations that are monitored are the limiting locations on the reactor vessel equalizer piping, the core spray piping, the standby liquid control piping, the feedwater (including connections to high pressure coolant injection, reactor core isolation cooling, and reactor water cleanup piping), and the main steam piping. For Unit 2, the monitored piping is the limiting locations for the feedwater piping, the primary steam condensate drainage, and the main steam piping.

The monitoring formulas in the CCTLP account for any effects due to power uprate or extended power uprate. The monitoring of locations corresponding to the seven locations identified in NUREG/CR-6260 for the older vintage BWR plant includes appropriate Fen factors to account for the effects due to a reactor water environment. Some of these locations are not currently monitored because their design CUF is below the 0.10 screening criteria. Formulas will be developed to add those locations to the program. Therefore, the bounding locations for the reactor pressure vessel, torus, and all Class 1 piping significantly susceptible to cracking due to fatigue are monitored.

In addition, a screening criterion of 0.1 CUF was used, along with other criteria from Branch Technical Position MEB 3-1, in establishing postulated break locations for Class 1 piping. Piping locations with calculated CUFs less than 0.1 for 40 years and that did not meet other criteria of MEB 3-1 were not further evaluated for installation of pipe whip restraints and a pipe break was not postulated at those locations. Using a linear extrapolation, Class 1 piping locations with CUF > 0.067 but < 0.1 for 40 years might exceed 0.1 for 60 years. Cracking due to fatigue in these locations will be managed by tracking fatigue usage for three bounding locations in the set of piping locations with 40-year CUF projections between 0.067 and 0.1.

The scope of the CCTLP includes long-lived passive components in the following systems or structures, within the scope of license renewal:

- reactor pressure vessel
- nuclear boiler
- reactor recirculation
- primary containment
- containment penetrations

- core spray
- standby liquid control
- feedwater
- high pressure coolant injection
- reactor core isolation cooling
- reactor water cleanup
- main steam
- primary steam condensate drains
- residual heat removal

**B. Preventive or Mitigative Actions**

There are no preventive or mitigative attributes associated with this program.

**C. Parameters Inspected or Monitored**

To address cracking, the CCTLP monitors the CUF for the critical locations in the RPV, the torus, and the Class 1 piping by events that can significantly contribute to the fatigue of components at the locations.

**D. Detection of Aging Effects**

This program does not detect cracking.

**E. Monitoring and Trending**

The CCTLP utilizes plant records to ascertain if events that could significantly contribute to components CUF have occurred. The calculations of the component CUF are documented in the plant records. Engineering personnel track and trend the CUF in accordance with the CCTLP implementing procedures.

**F. Acceptance Criteria**

The CCTLP tracks high fatigue usage components to assure that the plant will continue to meet the ASME Code, Section III[17], and CUF design requirement value of less than or equal to 1.0. Potential break points that have not been analyzed as such will be shown to have an actual CUF of less than 0.10. If the 60-year CUF is projected to exceed the acceptance criteria, a condition report is initiated to determine and take appropriate corrective action in accordance with the corrective actions program.

## 18.2.13 PLANT SERVICE WATER AND RHR SERVICE WATER INSPECTION PROGRAM

During the period of extended operation, the following aging effects could occur to plant service water (PSW) and RHR service water (RHRSW) passive components within the scope of license renewal: loss of material, loss of heat exchanger performance, flow blockage (fouling), and cracking (of RHR heat exchanger tubes). The plant service water and RHR service water inspection program manages these effects for those components. This program is designed to detect wall thickness degradation, fouling or

cracking in the components associated with the PSW and RHRSW systems. The specific inspection locations in the PSW and RHRSW systems are based on a representative sample of the most susceptible locations. Locations determined to be prone to corrosion are infrequently used piping (stagnated water), submerged piping, piping with low fluid velocity, small diameter piping, backing rings, socket welds, and the heat affected zone of a weld. Locations prone to clogging include those prone to corrosion, horizontal runs of piping at the bottom of vertical runs, intermittently used piping, and low point drains. Locations prone to cracking include locations susceptible to vibration fatigue and stress corrosion cracking (RHR heat exchanger tubes). Locations prone to erosion include the areas with high velocity.

This program partially satisfies the requirements of Nuclear Regulatory Commission Generic Letter 89-13[18]. In addition, other industry standards and codes are used as guidance.

**A. Program Scope**

The PSW and RHRSW inspection program will inspect those portions of the following systems that are within the scope of license renewal:

- residual heat removal and residual heat removal service water
- plant service water
- reactor building HVAC
- travelling water screen wash isolation valve
- control building HVAC

**B. Preventive or Mitigative Actions**

The PSW and RHRSW piping inspection program requires that divers visually inspect the intake structure pump suction pit. Any accumulations of biological fouling organisms, sediment, and corrosion products found during the inspection are removed to prevent these foreign materials from entering the system.

**C. Parameters Inspected or Monitored**

The PSW and RHRSW piping inspection program provides for visual and volumetric examinations intended to detect wall thinning, surface indications, and reduction of flow area within service water system components. This program also provides hardness testing to detect selective leaching.

**D. Detection of Aging Effects**

PSW and RHRSW piping inspection program inspections to detect loss of material include volumetric inspections (radiographic and ultrasonic), and visual inspections (including use of depth gages). Volumetric inspections, visual inspections, and flow testing are utilized to detect flow blockage (fouling) and loss of heat exchanger performance. Additionally, the program has provisions for hardness testing on brass and gray cast iron in the PSW or RHRSW system.

### E. Monitoring and Trending

Inspection and hardness test results are maintained in plant records. Engineering personnel track and trend results in accordance with PSW and RHRSW piping inspection program implementing procedures. Visual inspections are performed on safety-related heat exchangers and coolers supplied with raw water at frequencies prescribed in the implementing procedures.

### F. Acceptance Criteria

Any unacceptable indication of loss of material will be evaluated by engineering. When appropriate, engineering evaluations will be based upon the design code of record. If warranted, additional testing will be performed. Any significant degradation of components inspected or tested by the PSW and RHRSW piping inspection program is noted and corrective actions will be implemented in accordance with the existing corrective actions program.

## 18.2.14 PRIMARY CONTAINMENT LEAKAGE RATE TESTING PROGRAM

Primary containment leakage rate testing program (PCLRTP) satisfies the requirements that primary containment meets the leakage-rate test requirements in either Option A or B of 10 CFR 50, Appendix J[19]. Plant Hatch has opted for option B which identifies the performance-based requirements and criteria for preoperational and subsequent periodic leakage-rate testing. This program is designed to ensure that (a) leakage through the primary containment or systems and components penetrating the primary containment does not exceed allowable leakage rates specified in the Technical Specifications and (b) integrity of the containment structure is maintained during its service life. The PCLRTP manages the aging effect of loss of material.

There are three performance based leakage test requirements: Type A [also known as integrated leak rate test (ILRT)], Type B, and Type C [also known as local leak rate test (LLRT)]. Type A tests measure the containment system overall integrated leakage rate and are conducted under conditions representing design basis loss-of-coolant accident containment peak pressure. Type B pneumatic tests are performed to detect and measure local leakage rates across pressure retaining, leakage-limiting boundaries. Type C pneumatic tests are performed to measure containment isolation valve leakage rates. These tests ensure the integrity of the overall containment system as a barrier to fission product release following a postulated accident.

The PCLRTP was developed through the use of 10CFR50, Appendix J, Option B, Regulatory Guide 1.163[20], NEI 94-01[21], and ANSI/ANS 56.8-1994[22] and Bechtel Topical Report BN-TOP-1[23]. The allowable leakage rate ($L_a$) with margin is based on as specified in the Technical Specifications[24].

### A. Program Scope

The PCLRTP applies to the structures, systems and components within the scope of license renewal. These components include the steel primary containment, containment penetrations, and containment internal structures that perform a pressure retaining

function. It also includes the steel and nonferrous components of the containment airlocks, equipment hatches, and control rod drive (CRD) removal hatches.

**B. Preventive or Mitigative Actions**

There are no preventive or mitigative actions associated with this program.

**C. Parameters Inspected or Monitored**

The PCLRTP provides for visual inspection and performance testing intended to detect loss of material.

A general visual inspection of the accessible interior and exterior surfaces of the drywell and torus are performed prior to conducting a Type A test. The containment pressure boundary integrity is monitored by performance testing.

**D. Detection of Aging Effects**

The containment leakage rate testing program utilizes pressure tests of containment to verify that primary containment pressure integrity remains intact. In addition, general visual inspections are conducted prior to performing a type A (ILRT) test.

**E. Monitoring and Trending**

Inspection and performance testing results are maintained in plant records. Engineering personel track and trend results in accordance with PCLRTP implementing procedures.

**F. Acceptance Criteria**

Any unacceptable indication of loss of material will be evaluated by engineering. When appropriate, engineering evaluations will be based upon the design code of record. Any significant degradation of components tested and inspected by PCLRTP is noted and corrective actions will be implemented in accordance with the corrective actions program.

## 18.2.15 BOILING WATER REACTOR VESSEL AND INTERNALS PROGRAM

The boiling water reactor pressure vessel and internals inspection program (BWRVIP) developed inspection and evaluation reports for the reactor pressure vessel (RPV) and reactor internal components and submitted them to the NRC for review and approval. These reports address both the current term and the extended term of operation. Additionally, these reports specifically addressed the reactor pressure vessel components and reactor internals relative to the requirements of 10 CFR 54[25]. The BWRVIP criteria documented in the final NRC safety evaluations regarding these inspections and evaluation reports are used, except where a specific exception has been identified to the NRC.

For the RPV and reactor internals, applicable ASME Section XI[6] inservice inspection requirements and applicable augmented inspection requirements mandated by NRC

correspondence, such as NUREG 0619[26], are considered within BWRVIP inspection and evaluation reports and are addressed by BWRVIP inspection requirements.

**A. Program Scope**

Reactor pressure vessel components which require aging management for license renewal include RPV, feedwater nozzles, core spray nozzles, control rod drive return line nozzle, recirculation inlet and outlet nozzles, jet pump instrumentation nozzles penetration seals, core ΔP and standby liquid control nozzle, RPV support skirt, closure studs, attachment welds for internal core spray pipe, jet pump riser brace pad, and shroud support.

Reactor internals which require aging management for license renewal are the shroud and associated shroud repair hardware, shroud supports, internal core spray piping and spargers, control rod guide tubes, jet pump assemblies, control rod drive housings, top guides, and dry tubes.

**B. Preventive or Mitigative Actions**

There are no preventive or mitigative attributes associated with this program.

**C. Parameters Inspected or Monitored**

BWRVIP inspection and evaluation reports contain approved inspection methodologies to detect cracking of RPV and reactor internals.

**D. Detection of Aging Effects**

The BWRVIP inspection and evaluation documents provide for RPV and reactor internals examination utilizing a combination of ultrasonic, visual, and surface methods. Pressure testing is also utilized. The specific methods to be used and the frequency of examination are specified in the applicable BWRVIP inspection and evaluation report, unless a specific exception is identified to the NRC.

**E. Monitoring and Trending**

Monitoring requirements for the detrimental effects of aging within reactor assembly components are specified within BWRVIP inspection and evaluation reports. The frequency of examination specified within applicable BWRVIP inspection and evaluation reports varies for each component or subassembly. The frequency is based on the component's design, flaw tolerance, susceptibility to degradation, and the method of examination used.

**F. Acceptance Criteria**

BWRVIP inspection and evaluation reports provide specific acceptance criteria and proper corrective actions. BWRVIP inspection and evaluation reports applicable to Plant Hatch reactor assembly components are listed below:

| | |
|---|---|
| BWRVIP-18 | Core Spray Internals[27] |
| BWRVIP-26 | Top Guide[28] |

| | |
|---|---|
| BWRVIP-27 | Penetrations[29] |
| BWRVIP-38 | Shroud Support and Connecting Welds[30] |
| BWRVIP-41 | Jet Pump Assembly[31] |
| BWRVIP-47 | Control Rod Guide Tube[32] |
| BWRVIP-48 | RPV ID Attachment Welds[33] |
| BWRVIP-74 | RPV Shell and Heads, Nozzles, and Appurtenances[34] |
| BWRVIP-76 | Shroud (including repair hardware)[35] |

## 18.2.16 WETTED CABLE ACTIVITIES

Several 4 kV power cables and transformer feeder cables within the scope of license renewal run through conduits that junction in below grade pull boxes located outside. These cables might become immersed in rainwater if left unattended. In turn, wetted cable insulation might result in loss of insulation resistance.

### A. Program Scope

The wetted cable activities monitor insulated cable in portions of the following systems that are within the scope of license renewal.

- residual heat removal system
- core spray system
- plant service water system

### B. Preventive or Mitigative Actions

By routinely monitoring for water in the applicable pull boxes, and draining accumulated water when necessary, these activities prevent or mitigate loss of insulation resistance that might otherwise occur if cables were left immersed.

### C. Parameters Inspected or Monitored

Wetted cable activities provide for megger testing and polarization index comparison of cables to measure cable insulation resistance. A reduction in cable insulation resistance indicates aging degradation due to loss of insulation resistance.

### D. Detection of Aging Effects

Periodic megger and polarization index testing are the methods by which actual power cable insulation degradation is detected, regardless of whether or not the degradation was attributable to immersion.

### E. Monitoring and Trending

Inspection and test results are maintained in plant records. Engineering personnel track and trend results in accordance with wetted cable activities implementing procedures.

### F. Acceptance Criteria

Any unacceptable indication of loss of insulation resistance will be evaluated by engineering. Any significant degradation of components tested by the wetted cable activities is noted and corrective actions will be implemented in accordance with the corrective actions program.

## 18.2.17 REACTOR PRESSURE VESSEL MATERIALS SURVEILLANCE PROGRAM

The reactor pressure vessel (RPV) materials surveillance program meets the requirements of 10 CFR 50, Appendix H[36]. This program provides for testing and evaluation of in-core surveillance capsule tensile and charpy specimens and evaluation of capsule neutron exposure for the purpose of evaluating the results of operation on RPV beltline material upper shelf energy (USE) and nil-ductility transition temperature (NDTT).

Compliance with 10 CFR 50, Appendix H may be demonstrated either through an NRC approved site specific program or an integrated surveillance program that meets the technical requirements documented within BWRVIP-78[37].

### A. Program Scope

Reactor pressure vessel components requiring aging management within the scope of the RPV materials surveillance program include only RPV ferritic plates and welds within the beltline region.

### B. Preventive or Mitigative Actions

There are no preventive or mitigative attributes associated with this program.

### C. Parameters Inspected or Monitored

The RPV materials surveillance program provides for evaluation of charpy and tensile specimens and flux wires to estimate changes in the USE and NDTT of beltline ferritic materials.

### D. Detection of Aging Effects

The RPV materials surveillance program monitors reduction of fracture toughness within ferritic RPV beltline materials. Testing methodologies are provided within ASTM E185[38], with revision, as applicable. See Unit 1 FSAR section 4.2 and section 5.2.

### E. Monitoring and Trending

Reductions in ferritic vessel beltline material fracture toughness are monitored by the surveillance program. For the period of extended operation, the capsule removal schedule will be determined by the integrated surveillance program or an NRC approved site specific program.

### F. Acceptance Criteria

Data obtained from the materials surveillance program. or from use of estimation methodologies provided within NRC Regulatory Guide 1.99[39], is ultimately utilized to evaluate upper shelf energy reduction and shifts in NDTT. Limits are imposed on upper shelf energy, NDTT, and operating pressure and temperature by 10 CFR 50 Appendix G[40].

## 18.2.18 DIESEL GENERATOR MAINTENANCE ACTIVITIES

The diesel generator maintenance activities (DGMA) provide for management of the aging effects of loss of material, loss of preload, cracking, and loss of heat exchanger performance for the emergency diesel generator (EDG) components that are within the scope of license renewal. The DGMA are limited to the EDG components on the EDG skid.

### A. Program Scope

The DGMA address the aging effects for the emergency diesel generator skid-mounted components that contain jacket cooling water, lubrication oil, scavenging air, and raw water. The components are limited to the piping, tubing, bolting, restricting orifices, valve bodies, pump casings, heat exchangers, heater casings, filter housings, strainer bodies, and strainer elements.

### B. Preventive or Mitigative Actions

The DGMA are performance monitoring activities and preventive maintenance activities, as well as surveillance tests. During these activities, aging effects such as loss of material, loss of preload, cracking, and loss of heat exchanger performance that adversely impact the performance of the EDG component intended functions can be identified.

The DGMA also include periodic preventive maintenance on the EDG components. These maintenance activities include disassembly and refurbishment of the components, as needed. Replacement of adversely affected components (and fluids, such as the jacket cooling water and lubrication oil) is also an option within the DGMA.

The DGMA include provisions to address the loss of preload for bolting through the normal torque activities (see Section 18.2.11).

### C. Parameters Inspected or Monitored

The DGMA include visual inspections and chemical and performance based tests and analyses. Lubricating oil is tested for corrosion or wear products, water, fuel oil, and anti-freeze. Heat exchanger inspections visually inspect heat exchanger water boxes, tubes, tube sheets, and sacrificial zinc rods for damage, debris, deposits, and evidence of corrosion to discern the impact of loss of material. Heat exchanger inspections also include the option for eddy current testing of the heat exchanger tubes (exposed to raw water) on an as-needed basis. The quality of the ethylene glycol solution in the jacket

water cooling system is monitored during maintenance on the EDGs to ensure proper performance.

**D. Detection of Aging Effects**

DGMA are not intended to directly detect loss of material or cracking within EDG components or loss of preload in EDG bolting. The DGMA can detect loss of heat exchanger performance in the heat exchangers through pressure and temperature instrumentation monitoring during performance of periodic surveillance tests.

**E. Monitoring and Trending**

Inspection and test results and chemical analysis data are maintained in plant records as specified in DGMA implementing procedures. Engineering personnel track and trend results in accordance with DGMA implementing procedures.

**F. Acceptance Criteria**

For performance tests, the acceptance criteria are listed in the specific plant procedures and are intended to ensure that system operating temperatures, pressures, and expansion tank levels are within the acceptable operating ranges. For preventive maintenance activities, the acceptance criteria are also contained within the maintenance procedures and are commensurate with the safety significance of the component inspected. After maintenance, the performance of the components must be such that the performance test criteria are satisfied.

## 18.3 ENHANCED PROGRAMS/ACTVITIES

### 18.3.1 FIRE PROTECTION ACTIVITIES

Fire protection activities are comprised of inspections, condition monitoring and performance monitoring activities. Fire protection activities provide assurance that loss of material, cracking, flow blockage, and changes in material properties will not prevent the performance of necessary safe shutdown functions.

#### A. Program Scope

The Plant Hatch fire protection activities credited for license renewal include those portions of fire protection systems identified in the Fire Hazards Analysis (FHA) as forming part of the CLB. These include passive long-lived components in water based and gaseous fire suppression systems, the fire pump diesel fuel oil supply system (tanks and piping), fire doors, fire penetration seals, fire dampers, and cable tray enclosures. All of these components are part of the fire protection system.

The current term fire protection activities have been enhanced for the period of extended operation to include periodic inspection of water suppression system strainers and sprinkler heads.

Program enhancements will be implemented by midnight August 6, 2014 for Unit 1, and midnight June 13, 2018 for Unit 2.

#### B. Preventive or Mitigative Actions

Flushing of loop headers removes corrosion product buildup and ensures adequate flow through the system. Other than flushes, there are no preventive or mitigative attributes associated with the condition and performance monitoring elements of this program.

#### C. Parameters Inspected or Monitored

Surveillance and inspection of in-scope fire protection system components are performed in accordance with the frequencies and requirements the applicable portions of both Appendix B of the FHA and plant procedures that cover in-scope components. The activities performed to manage the effects of aging for these systems are listed in Table 18.3.1 - 1.

An inspection, called "Sprinkler Head Inspections," will be performed periodically for closed sprinkler heads in the scope of license renewal. The first inspection will take place after 50 years of service and subsequent inspections at 10-year intervals thereafter. Consistent with the guidance in NFPA-25[57], a random sampling of each type of closed sprinkler head in the scope of license renewal will be submitted to a recognized laboratory for testing. Based on the results, corrective actions will be accomplished, if required, to assure continued sprinkler head function during the period of extended operation.

**D. Detection of Aging Effects**

Detection of flow blockage, loss of material, cracking, and changes in material properties are accomplished directly by visual examinations of component surfaces and laboratory testing and indirectly through the use of flow or functional testing.

**E. Monitoring and Trending**

Inspection and performance testing results are maintained in plant records. Engineering track and trend results in accordance with site procedures.

**F. Acceptance Criteria**

Any significant degradation of fire protection system components that is observed during visual inspections or performance testing activities is noted and corrective actions are implemented in accordance with the corrective actions program. Acceptance criteria are specifically stated in the plant procedures that govern each test or inspection.

## 18.3.2 FLOW ACCELERATED CORROSION PROGRAM

The FAC program is a condition monitoring program designed to monitor pipe component wear in those systems that have been determined to be susceptible to FAC related loss of material. The objective of the program is to ensure that the damage caused by flow-accelerated corrosion will not cause components failures. This objective is accomplished by predicting the rate of degradation of components and taking corrective actions once the degradation is detected.

FAC is different from many other corrosion processes in that corrosion rates may be generally predicted.

Components identified by the plant predictive FAC model are periodically examined based on the recommendations of the EPRI NSAC-202L[41] since they meet all of the screening criteria contained within EPRI NSAC 202L for systems potentially susceptible to FAC.

The current term FAC program has been enhanced for the period of extended operation to include some components that do not meet all of the FAC criteria within EPRI NSAC 202L or component that are excluded from the plant predictive FAC model due to size.

The basis for the FAC program is EPRI NSAC-202L and the associated CHECWORKS™[42] computer code, which is used to create a plant predictive CHECWORKS™ FAC model. This plant predictive FAC model accounts for system conditions relevant to FAC such as pH, dissolved oxygen content, fluid (steam) quality, temperature, pipeline velocity, component geometry, and material of construction.

Program enhancements will be implemented by midnight August 6, 2014 for Unit 1 and common system components, and midnight June 13, 2018 for Unit 2.

**A. Program Scope**

The FAC program will examine portions of the following systems within the scope of license renewal.

- Nuclear Boiler
- High Pressure Coolant Injection Steam Supply Drains
- Reactor Core Injection Coolant Steam Supply Drains
- Unit 2 portions of the radioactive decay holdup volume (main steam, main steam line drains, condensate drains and condenser shell)

**B. Preventive or Mitigative Actions**

There are no preventive or mitigative attributes associated with this program.

**C. Parameters Inspected or Monitored**

The FAC program provides for visual and volumetric inspections intended to detect loss of material by monitoring component wall thickness.

**D. Detection of Aging Effects**

FAC program inspections are implemented to detect loss of material via radiographic (RT), ultrasonic (UT), and visual inspections.

**E. Monitoring and Trending**

Inspection results are maintained in plant records. Engineering personnel track and trend results in accordance with FAC program implementing procedures.

**F. Acceptance Criteria**

Any unacceptable indication of loss of material will be evaluated by engineering. When appropriate, engineering evaluations will be based upon the design code of record. If warranted, additional inspections will be performed. Any significant degradation of components inspected by the FAC program is noted and corrective actions will be implemented in accordance with the corrective action program.

### 18.3.3 PROTECTIVE COATINGS PROGRAM

The Plant Hatch protective coatings program (PCP) provides a means of preventing or minimizing loss of material that would otherwise result from contact of the base material with a corrosive environment. The PCP is a mitigation and condition monitoring program designed to provide base metal aging management through surface application, maintenance, and inspection of protective coatings on selected components and structures.

Coating Service Level I are those coating systems applied inside the primary containment where coating failure could adversely affect the operation of post-accident fluid systems and, thereby, impair safe shutdown of the plant.

Coating Service Level II are those coating systems, which are applied to systems, structures and components whose operation is essential to the attainment of the intended normal operating performance. The function of service level II coatings is to provide corrosion protection and decontaminability.

Coating Service Level III are those coating systems applied outside of primary containment, but which in the event of failure could adversely affect the orderly and safe shutdown of the plant.

**A. Program Scope**

The PCP provides specifications for coatings applied to structures and components within the scope of license renewal. The PCP includes specific inspection techniques and frequencies for Service Level I coatings (which include non-immersion coatings applied to the suppression chamber and drywell airspace and immersion coatings applied to the suppression chamber interior below the normal water level). The current term PCP has been enhanced for the renewal term to provide inspection techniques and frequencies for certain accessible non-service level I coatings. These requirements apply to external surfaces of carbon steel commodities outside of primary containment and within the scope of license renewal that are expected to experience significant atmospheric corrosion.

The PCP has also been enhanced to provide for inspection and documentation of the condition of normally inaccessible (underground or embedded) carbon steel components within the scope of license renewal, whenever these components are exposed or uncovered.

Program enhancements will be implemented by midnight August 6, 2014 for Unit 1 and common system components, and midnight June 13, 2018 for Unit 2.

**B. Preventive or Mitigative Actions**

Proper application of coatings limits, loss of material by preventing direct contact between susceptible base materials and environmental conditions conducive to corrosion.

**C. Parameters Inspected or Monitored**

Periodic inspection of components is conducted in order to identify areas of degraded coatings and associated corrosion of base metals, which may indicate a loss of material

**D. Detection of Aging Effects**

Detection of degraded coatings and associated corrosion of base metals is accomplished primarily through visual inspection techniques. For surfaces determined to be suspect, dry film thickness, adhesion, and continuity tests may also be performed.

### E. Monitoring and Trending

Service level I coatings are inspected at set intervals. A baseline inspection of non-service level I coated components within the scope of license renewal will be performed. Coated components are monitored for changes in previously identified findings and for newly developed conditions. Trending of such findings is performed to predict degrading conditions and to determine the potential long-term impact of the finding.

Inspection results are maintained in plant records. Engineering personnel track and trend results in accordance with site procedures.

### F. Acceptance Criteria

Any significant degradation of structural components that is observed during the visual inspection activities is noted and corrective actions implemented in accordance with the corrective actions program. Acceptance criteria are specifically stated in the PCP and the implementing procedures.

Specific acceptance criteria for the protective coatings program are based on multiple codes and standards. These include but are not limited to ANSI N5.12 – 1972[43], ANSI N101.2 – 1972[44], ASTM, Section 6, Volume 06.02[45], AWWA C203-1966[46], AWWA C209-1995[47].

Coatings application is performed in accordance with vendor recommendations and industry practices.

## 18.3.4 EQUIPMENT AND PIPING INSULATION PROGRAM

Equipment and piping insulation performance may be degraded if the insulation or jacketing is damaged. The equipment and piping insulation monitoring program (EPIM) is a condition monitoring program designed to detect cracking, loss of material, and changes in material properties in insulation through periodic inspection of specific passive component insulation. The current term program has been enhanced for the period of extended operation to include insulation on selected systems located inside buildings.

Program enhancements will be implemented by midnight August 6, 2014 for Unit 1, and midnight June 13, 2018 for Unit 2.

### A. Program Scope

The equipment and piping insulation monitoring program inspects insulation on portions of systems within the scope of license renewal. These systems are:

- standby liquid control
- residual heat removal (RHR) and RHR service water
- core spray
- high pressure coolant injection
- reactor core isolation cooling

- condensate transfer and storage (exposed piping at CST)
- plant service water
- fire protection (exposed piping at fire pump house)

**B. Preventive or Mitigative Actions**

EPIM program implementing procedures contain precautions that mitigate insulation damage by limiting climbing on pipe insulation. Damage is further mitigated by implementing procedures that provide specific instructions for removal, storage and installation of thermal and reflective insulation. Preventing the damage assures that changes in material properties, cracking, and loss of material are also prevented.

**C. Parameters Inspected or Monitored**

The equipment and piping insulation monitoring program provides for periodic visual inspection. The visual inspection identifies changes in material properties of the insulation. Aluminum and galvanized steel insulation jackets and their binders are inspected for cracking and loss of material.

**D. Detection of Aging Effects**

Visual inspection of the insulation and insulation jackets is performed to identify degradation which may indicate the aging effects of changes in material properties, loss of material, or cracking.

**E. Monitoring and Trending**

Inspection results are maintained in plant records. Engineering personnel track and trend results in accordance with EPIM program implementing procedures.

**F. Acceptance Criteria**

Any unacceptable indication of a change in material properties, cracking, or loss of material will be evaluated by engineering. If warranted, additional inspections will be performed. Any significant degradation of components inspected by the EPIM program is noted and corrective actions will be implemented in accordance with the corrective actions program.

## 18.3.5 STRUCTURAL MONITORING PROGRAM

The structural monitoring program (SMP)[48] provides a condition monitoring and appraisal process for structures and components within the scope of the Maintenance Rule (10 CFR 50.65)[49] and the License Renewal Rule (10 CFR 54)[25]. The SMP inspection process assesses the overall conditions of the buildings and structures, and identifies any ongoing degradation. The SMP manages loss of material, cracking and changes in material properties (including loss of adhesion).

**A. Program Scope**

The enhanced SMP monitors those portions of the following structures, components and commodities that are within the scope of license renewal. The program is patterned after the Westinghouse Owners Group Life Cycle Management/License Renewal Program[50].

- reactor buildings
- turbine buildings
- intake structure
- off gas stack
- EDG building
- control building
- condensate storage tank foundations and concrete walls surrounding the tanks
- PSW valve pits
- diesel generator fuel oil storage tanks
- nitrogen storage tank foundations
- foundations for the two fire protection water storage tanks
- foundations for the two fire protection diesel pump fuel tanks
- foundation for the fire pump house
- underground concrete duct runs and pull boxes between Class I structures
- Category I and II/I piping supports and tube tray supports
- Category I HVAC duct supports
- Category I and II/I cable trays and supports
- Category I and II/I conduits and supports
- Category I control room panels, racks and supports
- Category I auxiliary panels, racks and supports
- sealants in the joints between the reactor building exterior precast siding panels
- reactor building tornado vents
- reactor building penetrations

In addition, the SMP monitors secondary containment leakage characteristics.

**B. Preventive or Mitigative Actions**

There are no preventive or mitigative attributes associated with this program.

**C. Parameters Inspected or Monitored**

The SMP is a condition monitoring program that utilizes visual inspections to identify aging effects prior to any loss of intended function. Concrete structures are inspected for cracks, leaching, spalling and corrosion staining, as evidence of loss of material and cracking. Steel components are inspected for general and localized corrosion as evidence of loss of material. Panel joints and seals are inspected for evidence of loss of adhesion and changes in material properties. The acrylic domes of the tornado vents are inspected for cracks. Block walls are inspected for cracks. Piping is inspected for leakage. Secondary containment leakage characteristics are verified per SR 3.6.4.1.4 of the Plant Hatch Technical Specifications.[51]

**D. Detection of Aging Effects**

Structural condition is assessed through a visual inspection. Inspections include those structures normally accessible, as well as those below ground or embedded. When inaccessible structures are exposed because of excavation or modification, an examination of the exposed surfaces is performed. Structures are monitored for changes in previously identified findings and for newly developed conditions. Trending of such findings is performed to predict degrading conditions and to determine the potential long-term impact of the finding.

Qualified personnel, using detailed checklists, inspection tools and preparations perform the inspections. Noted degradation may be documented utilizing digital photography.

The inspection frequency for plant structures varies according to site conditions and susceptibility to aging degradation. The frequencies of the inspections are defined in the SMP document[48] and the implementing procedures.

As an additional measure of detection, the standby gas treatment system flow test can detect gross changes in in-leakage that may be indicative of age-related degradation and identification and correction of leakage from piping systems can prevent age-related degradation of components affected by that leakage.[51]

**E. Monitoring and Trending**

Initial inspections (baseline) were conducted to facilitate condition trending. Structures are monitored for changes in previously identified findings and for newly developed conditions. Trending of such findings is performed to predict degrading conditions and to determine the potential long-term impact of the finding.

Inspection results are maintained in plant records. Engineering personnel track and trend results in accordance with SMP implementing procedures.

**F. Acceptance Criteria**

Acceptance criteria for the inspection and criteria for categorizing the overall structure and component conditions (i.e., acceptable, acceptable with deficiency, or unacceptable) are provided in the procedure. The acceptance criteria are consistent with the recommended criteria in ACI-349.3R-1996[52], but also include additional criteria for roof ponding, water leakage, coatings, penetration seals, etc. The results of the inspections are evaluated in accordance with the guidance given in ACI-349.3R-1996[52] and NRC Regulatory Guide 1.160[53].

The structures will be inspected for the following conditions based on the acceptance criteria stated in the SMP document[48]. Any significant degradation of structural components, including leakage from piping, observed during the visual inspections is noted and corrective actions implemented in accordance with corrective actions program. Acceptance criteria are specifically stated in the SMP and the implementing procedures. The acceptance criteria for the secondary containment draw-down tests are specified in Ref. 51.

*Table 18.3.1-1 - Activities Performed to Manage Aging Effects for Fire Protection System Components*

| Activity | Method | Parameter |
|---|---|---|
| Cable tray enclosure inspection | Visual inspection | Condition - degradation |
| CO2 systems component inspection | Visual inspection | Condition - corrosion / degradation |
| CO2 systems performance test | Performance test | Flow |
| Exterior coatings inspection | Visual inspection | See Protective Coatings Program |
| Fire damper functional test | Performance test / Visual inspection | Observe full closure and no visible openings |
| Fire damper inspection | Visual inspection | Condition - corrosion / degradation |
| Fire diesel fuel oil tank level | Visual inspection | Fuel oil level |
| Fire hydrant flow check | Performance testing | Flow |
| Fire penetration seal inspection | Visual inspection | Condition - degradation |
| Fire Water Tank internal and external inspection | Visual inspection | Condition – corrosion, size and depth of pits |
| Fire Water Tank volume | Visual inspection | Water level |
| Flow test of water mains | Performance test | Pressure drop |
| Fuel oil storage tank sampling | Visual inspection / lab analysis | Presence of water, sediment, and other contaminants |
| Fuel oil system leak inspection | Visual inspection | Fuel oil leaks |
| Fuel oil tank internal inspection | Visual inspection | Condition - corrosion / degradation |
| Hose station inspection | Visual inspection | Condition - corrosion / degradation |
| Hose station valve cycling | Performance testing | Flow |
| Open head/deluge spray nozzle air flow test | Performance test | Flow |
| Sprinkler heads and nozzles inspection | Visual inspection | Condition – corrosion / degradation |
| Sprinkler system header flow activity | Performance test | Flow |
| Sprinkler system trip test | Performance test | Flow |
| Start and run each fire pump | Performance test | Flow, developed head |
| Start and run fire diesels | Performance test | Fuel oil leaks |
| Strainer inspection | Visual inspection | Condition - corrosion / degradation |
| System isolation valve cycling | Performance test / Visual inspection | Observe full valve position change |

## 18.4 NEW PROGRAMS/ACTIVITIES

### 18.4.1 GALVANIC SUSCEPTIBILITY INSPECTIONS

The galvanic susceptibility inspections will provide for condition monitoring via one-time inspections that will provide objective evidence that loss of material due to galvanic corrosion is being managed for specific components within the scope of license renewal.

#### A. Program Scope

Galvanic susceptibility inspections will examine an initial sample set of raw water carbon to stainless steel connections that are within the scope of license renewal. The inspected points will be the locations that are expected to have the greatest potential for galvanic coupling. Based on the results of the sample inspections, the sample set may be expanded to include galvanic couples associated with components in other environments. Systems include:

- nuclear boiler
- control rod drive
- residual heat removal and residual heat removal service water
- core spray
- high pressure coolant injection
- reactor core isolation cooling
- main condenser system
- plant service water
- emergency diesel generator
- primary containment
- containment atmospheric control
- traveling water screens

The Unit 1 and common inspections will be performed on or after August 6, 2009, but before midnight August 6, 2014. The Unit 2 inspections will be performed on or after June 13, 2013, but before midnight June 13, 2018.

#### B. Preventive or Mitigative Actions

There are no preventive or mitigative attributes associated with this program.

#### C. Parameters Inspected or Monitored

The galvanic susceptibility inspections provide for visual and volumetric inspections intended to detect loss of material due to galvanic corrosion. Inspection locations will be based on engineering judgement and will include areas predicted to be most susceptible.

The sample size of each examination method will be a function of the sample locations and component geometry.

### D. Detection of Aging Effects

Inspections will be performed using one or more methods. These may include visual inspections, ultrasonic thickness determinations, radiographic testing, depth gauges, and pipe removal and analysis. Visual inspections may utilize an examination method similar to that described for VT-1 in ASME Section XI[6], paragraph IWA-2210.

### E. Monitoring and Trending

There are no trending or monitoring attributes associated with this activity.

### F. Acceptance Criteria

Any unacceptable indication of loss of material will be evaluated by engineering. When appropriate, engineering evaluations will be based upon the design code of record. If warranted, additional inspections will be performed. Any significant degradation of components inspected by the GSI is noted and corrective actions will be implemented in accordance with the corrective actions program.

## 18.4.2 TREATED WATER SYSTEMS PIPING INSPECTIONS

The treated water systems piping inspections will be one time condition monitoring examinations intended to prove that existing chemistry control is managing loss of material and cracking in piping that is not examined under another inspection program.

### A. Program Scope

Scope of the program includes the specific structure, component, or commodity for the identified aging effect. Specific commodities include, but are not limited to, carbon and stainless steel piping, tubing, valve bodies, pump casings, tanks, accumulators and strainer bodies.

Treated water systems piping inspections will examine a sample population of carbon and stainless steel tubing and piping (including both large-bore pipe and small-bore butt-welded stainless steel pipe) in the treated water systems within the scope of license renewal. The results of the sample population examinations will be evaluated, and subsequent examinations will be conducted where evaluation results warrant.

Systems included are:

- nuclear boiler
- reactor recirculation
- control rod drive
- standby liquid control
- residual heat removal
- core spray
- high pressure coolant injection
- reactor core injection coolant
- main turbine auxiliaries

- portions of the radioactive decay holdup volume (main steam, main steam lines condensate drains and condenser shell) in Unit 2 only
- condensate storage and transfer
- reactor building component cooling water
- plant component cooling water (Unit 2 only)
- emergency diesel generator auxiliaries
- primary containment
- containment atmospheric control system

The Unit 1 and common inspections will be performed on or after August 6, 2009, but before midnight August 6, 2014. The Unit 2 inspections will be performed on or after June 13, 2013, but before midnight June 13, 2018.

### B. Preventive or Mitigative Actions

There are no preventive or mitigative attributes associated with this program.

### C. Parameters Inspected or Monitored

The treated water systems piping inspection provide for visual and volumetric inspections intended to detect loss of material and cracking.

These one-time inspections will focus Class 1 and Non-Class 1 carbon and stainless steel components within the reactor water, torus water, demineralized water, closed cooling water, and borated water environments.

Inspection locations will be based on engineering judgement and will include areas predicted to be most susceptible.

### D. Detection of Aging Effects

Inspections of the sample set will be conducted using the best available examination method for the inspected component. Visual inspections may utilize an examination method similar to that described for VT-1 in ASME Section XI[6], paragraph IWA-2210. Alternately, volumetric inspections may be used.

### E. Monitoring and Trending

There are no trending or monitoring attributes associated with this activity.

### F. Acceptance Criteria

Any unacceptable indication of corrosion will be evaluated by further engineering. When appropriate, engineering evaluations will be based upon the design code record. If warranted, additional inspections will be performed. Any significant degradation of components inspected by treated water systems piping inspections is noted and corrective actions will be implemented in accordance with the corrective actions program.

### 18.4.3 GAS SYSTEMS COMPONENTS INPSECTIONS

The gas systems component inspections (GSCI) will be a set of one-time condition monitoring inspections that provide objective evidence that age-related degradation is not inhibiting component function in gas-bearing in-scope systems and components. The aging effects that GSCI are intended to manage are loss of material, cracking, and material property changes.

**A. Program Scope**

The GSCI are applied to a sample set drawn from a population of components exposed to humid and wetted gas in the following systems:

- nuclear boiler (safety relief valve tailpipes to the torus)
- control rod drive
- residual heat removal
- high pressure coolant injection
- reactor core isolation cooling
- sampling
- starting air and engine exhaust subsystems of the emergency diesel generators
- primary containment (including the drain lines for the drywell sump discharge)
- reactor building HVAC
- standby gas treatment
- primary containment purge and inerting
- post LOCA hydrogen recombiners
- outside structure HVAC
- fire protection
- fuel oil (fuel oil storage tank vapor spaces)
- control building HVAC (including gaskets)

The sample population will focus on those locations in the in-scope components where liquid pooling or wet/dry cycling is most likely to occur during normal operation.

The Unit 1 and common inspections will be performed on or after August 6, 2009, but before midnight August 6, 2014. The Unit 2 inspections will be performed on or after June 13, 2013, but before midnight June 13, 2018.

**B. Preventive or Mitigative Actions**

There are no preventive or mitigative attributes associated with this program.

**C. Parameters Inspected or Monitored**

The GSCI provide for visual and volumetric inspections intended to detect loss of material, cracking, and material property changes.

**D. Detection of Aging Effects**

The GSCI use visual inspection techniques (similar to that described for VT-1 in ASME Section XI[6], paragraph IWA-2210). Alternatively, volumetric inspections may be used.

**E. Monitoring and Trending**

There are no trending or monitoring attributes associated with these inspections.

**F. Acceptance Criteria**

Any unacceptable indication of loss of material or cracking will be evaluated by engineering. When appropriate, engineering evaluations will be based upon the design code of record. If warranted, additional inspections will be performed. Any significant degradation of components inspected by the GSCI is noted and corrective actions will be implemented in accordance with the existing corrective actions program.

## 18.4.4 CONDENSATE STORAGE TANK INSPECTIONS

The CST Inspection will be a one-time condition monitoring inspection of the internal surfaces of each CST designed to provide objective evidence that no loss of material is occurring. This inspection is intended to validate the adequacy of current demineralized water chemistry controls to manage corrosion.

**A. Program Scope**

The CST inspection activities will inspect only those CST components, within the scope of license renewal, required to assure the availability of 100,000 gallons of water for the high pressure coolant injection and reactor core injection coolant systems.

The Unit 1 inspection will be performed on or after August 6, 2009, but before midnight August 6, 2014. The Unit 2 inspection will be performed on or after June 13, 2013, but before midnight June 13, 2018.

**B. Preventive or Mitigative Actions**

There are no preventive or mitigative attributes associated with this program.

**C. Parameters Inspected or Monitored**

The condensate storage tank inspection provides for visual inspection intended to detect loss of material. These inspections will focus on selected areas associated with the standpipes, associated supports and nozzles.

Inspection locations will be based on engineering judgement and will include areas predicted to be most susceptible.

**D. Detection of Aging Effects**

The CST Inspection will utilize visual inspection techniques similar to that described for VT-1 in ASME Section XI[6], paragraph IWA-2210.

**E. Monitoring and Trending**

There are no trending or monitoring attributes associated with this activity.

### F. Acceptance Criteria

Any unacceptable indication of loss of material will be evaluated by engineering. When appropriate, engineering evaluations will be based upon the design code of record. If warranted, additional inspections will be performed. Any significant degradation of components inspected by the condensate storage tank inspection is noted and corrective actions will be implemented in accordance with the corrective action program.

## 18.4.5 PASSIVE COMPONENTS INSPECTION ACTIVITIES

The passive components inspection activities (PCIA) are a set of on-going condition monitoring inspections designed to confirm that age-related degradation is not inhibiting the component functions of systems and components within the scope of license renewal. The PCIA manages the aging effects of loss of material, cracking, and change in material properties.

### A. Program Scope

The PCIA are applied to a sample set of components drawn from a population of components, in the scope of license renewal, in the following systems:

- nuclear boiler (safety relief valve tailpipes to the torus)
- control rod drive
- residual heat removal
- high pressure coolant injection
- reactor core isolation cooling
- starting air and engine exhaust subsystems of the emergency diesel generators
- primary containment (including the drain lines for the drywell sump discharge)
- reactor building HVAC
- standby gas treatment
- primary containment purge and inerting
- post LOCA hydrogen recombiners
- outside structure HVAC
- fire protection
- fuel oil (fuel oil storage tank vapor spaces)
- control building HVAC (including gaskets)

PCIA is based on availability, not population. As such, population, frequency, and sample size are not pre-determined. The preferred inspection sites will be those locations in the in-scope components where liquid pooling or wet/dry cycling is most likely to occur during normal operation.

### B. Preventive or Mitigative Actions

There are no preventive or mitigative attributes associated with these activities.

### C. Parameters Inspected or Monitored

Visual inspections in the PCIA verify material condition by checking for the presence of corrosion and cracking, so that engineering can make an evaluation of the impact of loss of material and cracking. For gaskets, the PCIA will visually inspect for the presence of cracks or material degradation to determine if a change in material properties of a loss of material has occurred.

### D. Detection of Aging Effects

The PCIA are condition monitoring activities that utilize visual inspections and volumetric inspections to identify aging effects prior to any loss of intended function. The PCIA will develop a baseline examination of a sample population of the in-scope components, as they become available due to normal maintenance activities. The PCIA will use visual inspection techniques (similar to that described for VT-1 in ASME Section XI[6], paragraph IWA-2210). Where possible and practical, accessible components may be inspected for stress corrosion cracking using surface or volumetric examination.

### E. Monitoring and Trending

The PCIA collects, reports, and trends age-related data. Inspection results are maintained in plant records. Engineering personnel track and trend results in accordance with PCIA implementing procedures.

### F. Acceptance Criteria

Any unacceptable indication of loss of material, change in material properties, or cracking will be evaluated by engineering. When appropriate, engineering evaluations will be based upon the design code of record. If warranted, additional inspections will be performed. Any significant degradation of components inspected by the PCIA is noted and corrective actions will be implemented in accordance with the corrective actions program.

## 18.4.6 RHR HEAT EXCHANGER AUGMENTED INSPECTION AND TESTING PROGRAM

The RHR heat exchanger augmented inspection and testing program is a condition monitoring program that manages aging of the RHR heat exchangers. The aging effects managed are loss of material, flow blockage, cracking, and loss of thermal performance.

The program partially satisfies the requirements of Nuclear Regulatory Commission Generic Letter 89-13[18]. SNC used the guidance of SAND 93-7070[54], as supplemented by reviews of current industry experience and practice, as the basis for this program.

### A. Program Scope

The subject program will inspect, test, and maintain passive components of the RHR heat exchangers that are within the scope of the license renewal.

**B. Preventive or Mitigative Actions**

The RHR heat exchanger augmented inspection and testing program requires that heat exchanger tubes and channel interior be cleaned on a periodic basis. This cleaning of the heat exchanger tubes and channel head mitigates flow blockage and loss of thermal performance.

**C. Parameters Inspected or Monitored**

The RHR heat exchanger augmented inspection and testing program provides for visual inspections, pressure testing, and eddy current testing intended to detect loss of material and flow blockage. Parameters inspected or monitored are the following: loss of material, flow area reduction due to fouling, and cracking.

**D. Detection of Aging Effects**

RHR heat exchanger augmented inspection and testing program is performed at prescribed frequencies in the implementing procedures to detect the identified aging effects of the heat exchanger passive components.

Visual inspection of channel side (including partition plate and tube sheet) and tube interior is performed This activity detects loss of material, flow blockage, and cracking.

The current term activities have been augmented for the period of extended operation by addition of the following tests and inspections:

Eddy Current Testing is performed periodically and whenever leaks are suspected. This activity detects loss of material and cracking.

The shell side of the tube sheets, shell internals, and impingement plates are visually inspected periodically, where accessible. This activity detects loss of material, flow blockage (fouling), and cracking.

Tube and tube sheet leak testing is performed whenever leaks are suspected. This activity detects leaks due to cracking and loss of material.

These augmentations will be fully implemented no later than midnight August 6, 2014 for Unit 1, and midnight June 13, 2018 for Unit 2.

**E. Monitoring and Trending**

Inspection and testing results are maintained in plant records. Engineering personnel track and trend results in accordance with implementing procedures.

**F. Acceptance Criteria**

Any unacceptable indication of loss of material is evaluated by engineering. When appropriate, engineering evaluations will be based upon the design code of record. If warranted, additional inspections are performed. Any significant degradation of components inspected by the RHR heat exchanger augmented inspection and testing

program is noted and corrective actions are implemented in accordance with the existing corrective actions program.

## 18.4.7 TORUS SUBMERGED COMPONENTS INSPECTION PROGRAM

The torus submerged components inspection program (TSCIP) is a condition monitoring activity designed to monitor torus submerged components for loss of material and cracking. The objective of the program is to assure that no unacceptable degradation is occurring. This inspection is intended to validate the adequacy of suppression pool chemistry controls to manage aging effects for a variety of uncoated structures and components that are exposed to the suppression pool environment.

### A. Program Scope

The TSCIP will initially examine a sample set of 10 percent of the uncoated components within the scope of license renewal and located in the torus. This sample will be biased towards the areas most likely to exhibit corrosion related degradation.

Portions of the following systems are within the scope of the TSCIP:

- safety relief valve tailpipe
- residual heat removal strainers
- core spray strainers
- high pressure coolant injection suction strainers and turbine exhaust
- reactor core isolation cooling suction strainers and turbine exhaust
- primary containment purge and inerting (vacuum relief piping)

The TSCIP will be implemented by midnight August 6, 2014 for Unit 1, and midnight June 13, 2018 for Unit 2.

### B. Preventive or Mitigative Actions

There are no preventive or mitigative attributes associated with this program.

### C. Parameters Inspected or Monitored

The TSCIP provides for visual inspections intended to detect loss of material and cracking in uncoated components and structures submerged within the suppression pool and in the vapor space directly above the suppression pool.

### D. Detection of Aging Effects

The TSCIP will utilize visual inspection techniques similar to that described for VT-1 in ASME Section XI[6], paragraph IWA-2210.

### E. Monitoring and Trending

There are no trending or monitoring attributes associated with this activity.

### F. Acceptance Criteria

Any unacceptable indication of loss of material or cracking will be evaluated by engineering. When appropriate, engineering evaluations will be based upon the design code of record. If warranted based upon the results of the initial inspections, inspections of additional locations within the torus will be performed. Corrective actions will be implemented in accordance with the corrective actions program.

## 18.4.8 INSULATED CABLES AND CONNECTIONS PROGRAM

The insulated cables and connections program is a condition monitoring program designed to confirm that age-related degradation (change in material properties) is not inhibiting component function of insulated cables and connectors.

### A. Program Scope

The insulated cables and connections program is a sampling program and includes accessible and inaccessible insulated cables within the scope of license renewal that are installed in adverse, localized environments in the primary containment structure, reactor building, radwaste building, diesel generator building, turbine building, control building, intake structure, and main stack, which could be subject to applicable aging effects from heat or radiation. This progam does not include cables and connections that are in the Environmental Qualification program. Based on the results of the sample inspections, the sample set may be expanded to include additional components. The initial Unit 1 and common inspections will be performed by midnight August 6, 2014. The initial Unit 2 inspections will be performed by midnight June 13, 2018.

### B. Preventive or Mitigative Actions

There are no preventive or mitigative attributes associated with this program.

### C. Parameters Inspected or Monitored

The insulated cables and connections program provides for visual inspections and testing intended to detect aging degradation. Change in material properties of the conductor insulation is the applicable aging effect. The changes in material properties managed by this program are those caused by severe heat or radiation.

### D. Detection of Aging Effects

Accessible insulated cables and connections will be inspected periodically. Inaccessible cables and connections will be tested periodically.

### E. Monitoring and Trending

Inspection and test results are maintained in plant records. Engineering personnel track and trend results in accordance with insulated cables and connections program implementing procedures.

**F. Acceptance Criteria**

Any unacceptable indication of change in material properties will be evaluated by engineering. If warranted, additional inspections or tests will be performed. Any significant degradation of components inspected by the insulated cables and connections program is noted and corrective actions will be implemented in accordance with the corrective actions program.

## 18.5 TIME LIMITED AGING ANALYSES CREDITED FOR LICENSE RENEWAL

### 18.5.1 TIME LIMITED AGING ANALYSES

Title 10 CFR Part 54 (the License Renewal Rule, or the Rule) requires that time limited aging analyses (TLAA) be evaluated to capture certain plant-specific aging analyses explicitly based on the original 40 year operating life of the plant. In addition, the Rule requires that any exemptions based on TLAAs be identified and analyzed to justify extension of those exemptions through the renewal term.

TLAA evaluations for Plant Hatch included those calculations and analyses that met all six criteria of the Rule, specifically, those calculations or analyses that:

- involved systems, structures and components (SSC) within the scope of license renewal;
- considered the effects of aging;
- involved time-limited assumptions defined by the licensed operating term at the time of the license renewal application;
- were determined to be relevant in making a safety determination;
- involved conclusions or provide the bases for conclusions related to the capability of the SSC to perform its intended functions, as delineated by the Rule; and
- were contained or incorporated by reference in the licensing basis at the time of application for renewal.[55]

Given those six criteria, many calculations and analyses qualified as TLAAs. A summary listing of those calculations and analyses is shown in Table 18.5-1.

Once a TLAA has been identified, the Rule requires it be dispositioned by one of the following three specific criteria:

1. the analyses remain valid for the license renewal term; or
2. the analyses have been acceptably projected to the end of the renewal term; or
3. programs are in place to manage the effect of aging in the analyzed systems, structures or components.[56]

With the exceptions of two areas further discussed below, all of the items in Table 18.5-1 were entirely dispositioned by criterion 1 and/or 2 above. As such, these TLAAs were entirely dispositioned through an update of the existing calculations. The two areas dispositioned in part by Criterion 3 are further discussed below.

#### 18.5.1.1 Stress Analysis Calculations

The stress analysis calculations for the RPV, Class 1 piping, and the torus will be monitored to assure that the cumulative usage factor stays less than or equal to 1.0 (see Section 18.2.12). Additional details of this program are described in sections 4.2.5 and 5.4.6 of the Unit 1 and 2 Final Safety Analysis Reports, respectively.

### 18.5.1.2 Equipment Qualification Report Evaluations

Aging of electrical equipment falling within the scope of 10 CFR 50.49, that has less than a 60-year qualified life, are managed by the Environmental Qualification (EQ) Program. The EQ Program is described in section 7.16 and section 3.11 of the Unit 1 and 2 Final Safety Analysis Reports, respectively.

*Table 18.5-1 Summary Listing of Calculations and Analyses Meeting the Six Time Limited Aging Analyses Criteria*

| |
|---|
| 1. Piping stress analyses that consider thermal fatigue cycles defined by the life of the plant. |
| 2. Fatigue/stress analyses for the torus structure and nozzle connections. |
| 3. Piping wall thickness calculations that develop acceptable as-measured criteria for pipe walls based upon an anticipated corrosion rate that, in turn, is based upon the life of the plant. |
| 4. Calculation of the corrosion allowance assumed for the reactor vessel. |
| 5. Environmental equipment qualification calculations that qualify electrical components for 40 years. |
| 6. A containment penetration structural analysis that assumes a number of pressurization cycles over the 40-year life of the plant. |
| 7. Calculation of the reference temperature for nil-ductility for critical core region vessel materials accounting for radiation embrittlement (as required by 10 CFR 50 Appendix G). |
| 8. Calculation of the end-of-life equivalent Charpy Upper-Shelf Energy margin (as required by 10 CFR 50 Appendix G) due to the extended operating term. |
| 9. Analyses performed to demonstrate the acceptability of a technical alternative to the ASME code requirement inspection of reactor pressure vessel circumferential welds. |

## 18.6 REFERENCES


1. TR-103515, Electric Power Research Institute (EPRI), "BWR Water Chemistry Guidelines".

2. TR-107396, EPRI "Closed Cooling Water Chemistry Guidelines".

3. Generic Letter 89-13 with Supplement 1 "Service Water System Problems Affecting Safety-Related Equipment," 1990.

4. State of GA Department of Natural Resources Environmental Protection Division Permit No. GA0004120, "Plant Hatch NPDES Permit", Effective September 15, 1997.

5. 10 CFR 50, Appendix B "Quality Assurance Criteria for Nuclear Power Plants and Fuel Reprocessing Plants"

6. ASME Boiler and Pressure Vessel Code, Section XI, "Rules for Inservice Inspection of Nuclear Power Plant Components."

7. 10 CFR 50.55a, Codes and Standards

8. ANSI B30.2-1976, Overhead and Gantry Cranes.

9. NUREG-0612, Control of Heavy Loads of Nuclear Power Plants.

10. ANSI B30.9-1971, Slings.

11. ANSI/ASME B 30.10-1982, Hooks (Revision of ANSI B30.10-1975).

12. ANSI N14.6-1978, Special Lifting devices for shipping containers weighing 10,000 lbs. (4500 kg) or more for nuclear materials.

13. ASME Boiler and Pressure Vessel Code, Section VIII, "Pressure Vessel."

14. ASME Boiler and Pressure Vessel Code, Section II, "Specification for Carbon Steel Externally Threaded Standard Fasteners."

15. ASTM Standards, Section 15, Volume 15.08, "Fasteners."

16. ASME B31.1, "Power Piping."

17. ASME Boiler and Pressure Vessel Code, Section III, "Rules of Construction for Nuclear Power Plant Components."

18. NRC Generic Letter 89-13, "Service Water System Problems Affecting Safety Related Equipment," July 18, 1989.

19. 10 CFR 50, Appendix J "Primary Reactor Containment Leakage Testing for Water-Cooled Power Reactors".

20. Regulatory Guide 1.163 "Performance-based Containment Leak-Test Program".

21. NEI 94-01 "Industry Guideline for Implementing Performance-based Option of 10 CFR Part 50, Appendix J".

22. ANSI/ANS 56.8-1994 "American National Standard for Containment System Leakage Testing Requirements".

23. Bechtel Topical Report BN-TOP-1 "Testing Criteria for Integrated Leakage Rate Testing of Primary Containment Structures for Nuclear Power Plants".

24. Edwin I. Hatch Nuclear Plant Technical Specifications, Units 1 and 2, Section 3.6.

25. 10 CFR 54, License Renewal Rule.

26. NUREG 0619 – "BWR Feedwater Nozzle and Control Rod Drive Return Line Nozzle Cracking", U.S. NRC, November 1980.

27. BWRVIP-18 – BWR Core Spray Internals Inspection and Flaw Evaluation Guidelines.

28. BWRVIP-26 – BWR Top Guide Inspection and Flaw Evaluation Guidelines.

29. BWRVIP-27 – BWR Standby Liquid Control System/Core Plate $\Delta P$ Inspection and Flaw Evaluation Guidelines.

30. BWRVIP-38 – BWR Shroud Support Inspection and Flaw Evaluation Guidelines.

31. BWRVIP-41 – BWR Jet Pump Assembly Inspection and Flaw Evaluation Guidelines.

32. BWRVIP-47 – BWRVIP Lower Plenum Inspection and Flaw Evaluation Guidelines.

33. BWRVIP-48 – Vessel ID Attachment Weld Inspection and Evaluation Guidelines.

34. BWRVIP-74 – BWR Reactor Pressure Vessel Inspection and Flaw Evaluation Guidelines.

35. BWRVIP-76 – Core Shroud Inspection and Evaluation Guidelines.

36. 10 CFR 50, Appendix H, Reactor Vessel Material Surveillance Program Requirements.

37. BWRVIP-78, BWR Integrated Surveillance Program Plan.

38. ASTM E185, "Standard Practice for Conducting Surveillance Tests for Light-Water Cooled Nuclear Power Reactor Vessels."

39. Regulatory Guide 1.99, Revision 2, "Radiation Embrittlement of Reactor Vessel Materials"

40. 10 CFR 50, Appendix G, Fracture Toughness Requirements.

41. EPRI NSAC-202L "Recommendations for an Effective Flow-Accelerated Corrosion Program, November 1993.

42. EPRI CHECKWORKS Computer Program, Version 1.0 C.

43. ANSI N5.12 – 1972 "Protective Coatings (Paints) for the Nuclear Industry."

44. ANSI N101.2 – 1972 "Protective Coatings (Paints) for Light Water Nuclear Reactor Containment Facilities."

45. ASTM Section 6, Vol. 6.02 "Paints-Products and Applications; Protective Coatings; Pipeline Coatings."

46. American Water Works Association (AWWA) C203 – 1966 "Standard for Coal-Tar Protective Coatings and Linings for Steel Water Pipelines – Enamel and Tape – Hot Applied."

47. AWWA C209 – 1995 "Cold Applied Tape Coatings for the Exterior of Special Sections, Connections, and Fittings for Steel Water Pipelines," 2nd Ed.

48. A-44985, Structural Monitoring Program for the Maintenance Rule, Edwin I. Hatch Nuclear Plant, Units 1 and 2.

49. 10 CFR 50.65, "Requirements for Monitoring the Effectiveness of Maintenance at Nuclear Power Plants."

50. Westinghouse Owner's Group Life Cycle Management / License Renewal Program, Altran Corporation / Altran Materials Engineering.

51. Unit 1 and Unit 2 Plant Hatch Technical Specifications, SR 3.6.4.1.4.

52. ACI Committee 349, Report ACI 349.3R-96, "Evaluation of Existing Nuclear Safety-Related Concrete Structures."

53. NRC Regulatory Guide 1.160, Rev 2 "Industry Guideline for Monitoring the Effectiveness of Maintenance at Nuclear Power Plants."

54. SAND 93-7070. UC-523, "Aging Management Guideline for Commercial Nuclear Power Plants - Heat Exchangers," July 1994.

55. 10 CFR 54.3, "Definitions."

56. 10 CFR 54.21.(c).1, "Contents of the Application – Technical Information."

57. NFPA 25, National Fire Protection Association Standard.

ENCLOSURE 5

# EDWIN I. HATCH NUCLEAR PLANT

DOCKETS 50-321, 50-366

OPERATING LICENSES DPR-57, NPF-5

# SMALL-BORE PIPING EVALUATION REPORT

LICENSE RENEWAL DOCUMENTATION

SEPTEMBER 5, 2001

# ENCLOSURE

# SMALL BORE PIPING EVALUATION REPORT

## INTRODUCTION

The evaluations for small-bore ASME B&PVC Class 1 piping documented in the Plant Hatch License Renewal Application (LRA) did not identify susceptibility to thermal fatigue issues such as thermal stratification or turbulent penetration as an aging effect requiring management. Subsequently, the NRC requested additional information in a letter dated July 28, 2000 (Reference 1). In this transmittal, the NRC staff requested information regarding degradation of ASME B&PVC Class 1 Components due to thermal fatigue and stress corrosion cracking. Attachment 1 contains the text of this RAI and the associated SNC response transmitted to the NRC in a letter dated October 10, 2000 (Reference 2).

The NRC Safety Evaluation Report, With Open Items Related to the License Renewal of the Edwin I. Hatch Nuclear Plant, Units 1 and 2 (Reference 3) issued in February 2001 contained open item 3.2.3.2.3-1 regarding the potential for unanticipated high cycle thermal fatigue resulting from thermal stratification or turbulent penetration. Attachment 2 contains the text of this NRC open item and the associated SNC response transmitted to the NRC in a letter dated June 5, 2001 (Reference 4). The NRC staff's concern in this open item was piping components less than NPS 4, which are exempt from ASME Boiler and Pressure Vessel Code Section XI (Reference 5), Subsection IWB volumetric examination requirements, that could be subject to thermal stratification or turbulent penetration. Additionally, the open item specifically excluded piping components of socket welded construction. SNC concluded from this open item that the question related to intergranular stress corrosion cracking (IGSCC) originally stated in RAI 3.2.3.2-8 had been adequately addressed and was no longer an issue.

In response to both these items, SNC evaluated the ASME Class 1 piping drawings for Plant Hatch Units 1 and 2 to identify piping components less than NPS 4 of butt welded construction. SNC evaluated the resulting list of components to determine if any of these components could be susceptible to thermal stratification, turbulent penetration, or intergranular stress corrosion cracking. Although IGSCC was not mentioned in the open item, for completeness and technical integrity, SNC did consider this degradation mechanism as part of the process. No locations were identified for Plant Hatch where additional volumetric examinations would be warranted.

This report outlines the evaluation methodology utilized to reach these conclusions, and presents a summary of the results.

## EVALUATION PROCESS

### I. Initial Screening Process

Initially, a detailed review of each Plant Hatch P&ID containing ASME B&PVC Class 1 components was performed to identify piping segments less than NPS 4. From this set of components, locations known to be socket welded construction were excluded from any further consideration. Piping fabrication method was determined utilizing piping isometric drawings and piping specification information. This review resulted in a list of six location types (some locations are applicable to both Units) that meet the component size and fabrication method requirements established by the NRC staff in open item 3.2.3.2.3-1.

The results were as follows (See Attachment 3 for additional detail and drawing references):

1) NPS 4x2 reducers on the Unit 1 and Unit 2 Reactor Pressure Vessel (RPV) head vents.
2) RPV bottom head drain line electrochemical potential (ECP) sensor enclosures for Units 1 and 2. This installation includes an NPS 4 lateral with NPS 4x2 reducers which houses the ECP sensors. See Figure 1.
3) NPS 3x4 concentric expander installed on the downstream side of RWCU check valve 1G31-F039 (near connection to Reactor Coolant Isolation Cooling System injection line). See Figure 2. This location is applicable to Unit 1 only.
4) NPS 3 piping between RWCU check valve 1G31-F203 and the High Pressure Coolant Injection system injection line connection. See Figure 3. This location is applicable to Unit 1 only.
5) NPS 3 elbow and NPS 3x4 expander (Reactor Core Isolation Cooling system steam supply at main steam line "D").
6) NPS 3 piping comprising a portion of the path for Main Steam Isolation Valve leak off and HPCI / RCIC steam line drains.

To validate the list of applicable locations determined by P&ID review, the Plant Hatch Inservice Inspection database, which contains a list of all ASME B&PVC Class 1 welds, was searched for welds greater than NPS 2, but less than NPS 4. No locations were identified by this search that had not been previously identified by the P&ID review.

## II. Evaluation Methodology

For the six locations determined to meet the NRC size and fabrication requirements, additional design documents, including the Plant Hatch Piping Specifications (References 6 and 7) were reviewed as needed to establish details regarding materials of construction, environmental conditions, construction details, and layout details. Using this design information, each of the six locations was evaluated as follows:

1) Susceptibility to thermal stratification and turbulent penetration based on the criteria contained within EPRI TR-1000701 (Reference 8)

EPRI TR-1000701, *Interim Thermal Fatigue Management Guideline (MRP-24)* is intended to provide guidance to identify and inspect locations that may be susceptible to thermal stratification or turbulent penetration. This guideline was developed for pressurized water reactors only. However, it is used within this report to establish a basis for the types of locations that could be susceptible in a boiling water reactor. This interim guideline was transmitted to the NRC by NEI letter dated March 16, 2001 (Reference 11).

Section 3 of this fatigue management guideline provides specific recommendations for assessment of piping systems. As applied to a boiling water reactor, the locations considered susceptible are:

- lines with the potential for valve in-leakage toward the recirculation system where cyclic interactions between the leakage flow and recirculation system turbulence may exist and;
- normally stagnant drain lines that branch from the bottom of a process line and turn horizontal prior to encountering an isolation valve.

Utilizing the above criteria, none of the six locations identified by the screening process described in Section I above were determined to be susceptible to thermal stratification or turbulent penetration.

2) Susceptibility to IGSCC

The material of construction and associated environmental conditions were reviewed for each location resulting from the screening process described in Section I above to assess the relative potential for IGSCC. All component locations, with the exception of the ECP enclosures, are fabricated from carbon steels. As such, IGSCC is not applicable for these locations.

While the ECP enclosure installations are potentially susceptible to IGSCC, these enclosures are fabricated from low carbon austenitic stainless steels. The reduced carbon content limits the formation of detrimental chromium carbides during the field welding process and therefore limits component susceptibility to IGSCC.

3) Significance of a postulated failure based on make-up capability

Make-up capability was utilized to assess the relative significance of a postulated failure at any particular location. Failures of piping components having diameters less than the make-up capability are less safety significant. ASME B&PVC Section XI, IWB-1220(a) allows for examination exemptions based on make-up capacity. General Electric (GE) performed an analysis for Plant Hatch to determine the failure size required to exceed make-up capability (Reference 9). The results of this analysis are as follows :

- Hatch Unit 1: 2.5" Ø for water and 5.0" Ø for steam (@1050 psi)
- Hatch Unit 2: 2.1" Ø for water and 4.2" Ø for steam (@ 1050 psi)

*(GE defined water lines as those penetrating the RPV below the normal water level and steam lines as those penetrating the RPV above the normal water level.)*

Each location resulting from the screening process described in Section I above was evaluated against make-up capability. Based on the limiting nature of the inlet and outlet piping, some locations with diameters greater than the make-up diameter were determined to result in coolant loss less than the limiting make-up flowrate. For example, location 2 (ECP sensor enclosures) contains NPS 4 piping and penetrates the RPV below the normal water level. However, the inlet and outlet piping are NPS 2. Thus, the failure of the NPS 4 component effectively results in only an NPS 2 break.

The results of these three reviews regarding fatigue susceptibility, IGSCC susceptibility, and make-up criteria are presented in Attachment 3 for each of the 6 locations identified during the screening process.

## III. Summary of Results

Evaluation of the screened locations utilizing the methodology described in Section II above yields the following results:

As stated in the June 5, 2001 response to open item 3.2.3.2.3-1, only two locations met the NRC size and fabrication criteria and exceeded the make-up capability. Using an evaluation based on the EPRI Fatigue Management Guidelines, neither of these locations is considered to be susceptible to thermal stratification or turbulent penetration.

Additionally, four locations met the NRC size and fabrication requirements but did not exceed the make-up criteria. Using an evaluation based on the EPRI Fatigue Management Guidelines, none of these locations is considered to be susceptible to thermal stratification or turbulent penetration.

Only the ECP sensor enclosures were determined to have any potential susceptibility to IGSCC, as these components are fabricated from austenitic stainless steels. However, low carbon content (0.03% or less) materials were utilized. This low carbon content greatly reduces the potential for sensitization (depletion of chromium in the heat affected zones) during field welding (Reference 10). In addition, a postulated failure in this location is determined to result in leakage rates less than make-up capacity, and therefore would have reduced safety significance. Finally, other piping in Unit 1 that is of higher carbon content is inspected in accordance with BWRVIP-75 and can be considered bounding in terms of IGSCC susceptibility. Based on these factors, as well as the existing aging management activities credited in the LRA for this piping, as described in the response to RAI 3.2.3.2-8, no additional inspection program is warranted.

In summary, no locations requiring additional inspections were identified by this evaluation of small bore piping.

## IV. References

1) NRC letter to H.L. Sumner (SNC), July 28, 2000, Edwin I. Hatch Nuclear Plant Units 1 and 2 – Request for Additional Information for the Review of the License Renewal Application.

2) Letter to NRC, HL-6002, October 10, 2000, Edwin I. Hatch Nuclear Plant – Response to License Renewal Requests for Additional Information.

3) Safety Evaluation Report, With Open Items Related to the License Renewal of the Edwin I. Hatch Nuclear Plant, Units 1 and 2, Docket Nos. 50-321 and 50-366, February 2001.

4) Letter to NRC, HL-6092, June 5, 2001, Edwin I. Hatch Nuclear Plant – Transmittal of Responses to License Renewal Draft Safety Evaluation Report Open Items.

5) American Society of Mechanical Engineers Boiler and Pressure Vessel Code, Section XI, Rules for Inservice Inspection of Nuclear Power Plant Components, 1989 Edition, No Addenda.

6) A-11000, Edwin I. Hatch Nuclear Plant – Unit 1, Piping Specification.

7) A-21000, Edwin I. Hatch Nuclear Plant – Unit 2, Piping Specification.

8) Electric Power Research Institute, Technical Report 1000701, *Interim Thermal Fatigue Management Guideline (MRP-24)*, January 2001.

9) Letter to Marty Sims, (SNC) from General Electric Nuclear Energy (Richard Hooper), December 8, 1997, Plant Hatch Units 1 and 2 ASME Class 1 Pipe Size Exclusion Exemption Calculation In Accordance With ASME Section XI, 89NA, IWB-1220.

10) ASM Handbook Volume 13, Corrosion, ASM International, 1987.

11) Letter to Jack Strosnider (NRC) from NEI dated March 16, 2001 on "Interim Thermal Fatigue Guideline.

## V. Attachments

### ATTACHMENT 1

*The following NRC request for additional information (RAI) and the associated SNC response are excerpted from HL 6002 dated October 10, 2000 (Reference 2).*

**RAI 3.2.3.2-8:**

NRC Bulletin 88-08, "Thermal Stresses in Piping Connected to Reactor Coolant Systems," identified cracking in an unisolable section of emergency core cooling system piping connected to the reactor coolant system. The cause of the cracking was high cycle thermal fatigue created by relatively cold water leaking through a closed valve. In addition, cracks in piping have also been attributed to vibratory fatigue and stress corrosion aging mechanisms.

Identify any ASME Code Class 1 small bore (nominal pipe size less than 4 inches) piping that could be subject to cracking from thermal fatigue, vibratory fatigue, or stress corrosion aging mechanisms. For each of these systems, provide your basis for concluding that these systems are subject or not subject to these aging effects. Identify the aging management program that can be used to determine whether cracking has occurred in these components. Identify the nominal pipe size and type of material used in the fabrication of the piping.

**RESPONSE TO RAI 3.2.3.2-8:**

The following systems contain ASME Code Class 1 small-bore (nominal pipe size less than four inches) piping that could be subject to cracking from thermal fatigue or stress corrosion aging mechanisms:

B21 - Nuclear Boiler
B31 – Reactor Recirculation
C41 – Standby Liquid Control
E11 – Residual Heat Removal
E21 – Core Spray
E41 – High Pressure Coolant Injection
E51 – Reactor Core Isolation Cooling
G31 – Reactor Water Cleanup

Since carbon steel and stainless steel components in these systems are subject to changes in temperature, cracking due to thermal fatigue is an aging effect requiring management. For pipe sizes above 1 inch, the AMP credited to manage aging of these components due to thermal fatigue is the CCTLP. Class 1 piping one inch and smaller was analyzed to ASME Class 2 methods. For the one inch and under size, cracking due to thermal fatigue is addressed as a TLAA in LRA Section 4.2.3. Section 4.2.3 provides the demonstration that the analyses remain valid through the extended period of operation. Cracking due to vibratory fatigue is not considered an aging effect requiring management since failure of these components due to vibration has been precluded by design.

As described in Section C.1.2.1.2, for SCC to occur in components of the above systems, each of the following three conditions must simultaneously exist:

The components must contain susceptible materials (in this case, stainless steel or nickel based alloys), and;

The components must be subject to residual tensile stresses of sufficient magnitude, and;

The components must be subject to a potentially corrosive environment.

All three conditions exist simultaneously in the above systems, so cracking due to IGSCC is an aging effect requiring management.

For these systems, SNC defines the corrosive environment as high temperature water where the ECP of alloys exposed to the coolant is increased due to the presence of radiolytically produced dissolved oxygen and hydrogen peroxide. Without the appropriate reactor water chemistry controls, this corrosive environment could exist. Therefore, to manage IGSCC in the above systems, SNC has credited reactor water chemistry control, coupled with either the ISI program (for two inch and larger piping in these systems) or the TWSPI (for piping in these systems that is not included in the ISI program).

## ATTACHMENT 2

*The following NRC open item and associated SNC response are excerpted from HL 6092 dated June 5, 2001 (Reference 4).*

**Open Item 3.2.3.2.3-1**

The staff is concerned that unanticipated high cycle thermal fatigue resulting from thermal stratification or turbulent penetration could result in cracking of small bore piping. This type of cracking is not evaluated as part of the component cyclic or transient limit program. The ASME Code Class 1 inspection requirements for small-bore piping include a surface examination, but not a volumetric examination. In order to detect cracking resulting from high cycle thermal fatigue, a volumetric examination is required. Since the proposed program does not include a volumetric examination, it may not be capable of detecting high cycle thermal fatigue cracks resulting from thermal stratification or turbulent penetration. Therefore, the applicant should supplement the existing programs with volumetric examination of the limiting locations in small-bore piping systems, excluding socket welds, which could have thermal stratification or turbulent penetration.

**Response to Open Item 3.2.3.2.3-1**

SNC has performed a review of the Class 1 piping drawings to assess the potential for thermal fatigue in small-bore piping. The review excluded those portions of piping that contained socket welds. As a result of this cursory evaluation that considered location, geometry, and normal operating conditions, SNC did not identify areas where thermal cycling due to turbulent eddy currents or thermal stratification would be expected.

As noted in its January 31, 2001 letter responding to various potential draft SER open items, SNC also reviewed the significance of cracking in small-bore piping and used that information as a screening tool to further assess the need for inspections or other aging management besides the existing ASME Section XI pressure testing requirements. That information is included in this response as well for completeness.

In addressing the significance of thermal fatigue cracking of Class 1 piping components as a result of thermal stratification or turbulent penetration, SNC maintains that the current open item issue is limited to ASME Class 1 pipe welds which meet two specific criteria. First, ASME Section XI, Table IWB-2500-1, based on pipe sizes less than NPS 4, requires only surface examination. Second, the pipe size is sufficiently large that a failure could result in a rate of coolant loss in excess of the capacity of makeup systems (as described in IWB-1220(a)). An analysis performed by GE in 1997 determined the line sizes which could be excluded from ISI Class 1 surface and volumetric examination based on makeup capacity to be as follows:

- Hatch Unit 1: 2.5" diameter for water and 5.0" diameter for steam
- Hatch Unit 2: 2.1" diameter for water and 4.2" diameter for steam

This analysis assumes that water lines are those which penetrate the RPV below normal water level and steam lines are those which penetrate the RPV above normal water level. Therefore, based on these values, water containing piping of NPS 2 and smaller and steam containing piping of NPS 4 and smaller are excluded from further consideration regarding the issue of thermal fatigue as presented in this open item.

Based on the above postulates, a review of HNP piping drawings reveals the following pipe segments that do not require volumetric examinations per IWB-2500, and are large enough that a failure could result in a rate of coolant loss in excess of available makeup capacity:

- H16188 – RWCU piping between check valve 1G31-F203 and the branch connection to the HPCI injection line. This is a short segment of NPS 3 piping containing three welds.
- H16188 – 3"x4" expander downstream of 1G31-F039 (check valve at RWCU discharge to the RCIC injection line. Only the weld at 1G31-G039 is less than NPS 4.

For these specific segments, a cursory evaluation of location, geometry, and normal operating conditions indicates that these piping segments are not in areas where thermal cycling due to turbulent eddy currents or thermal stratification would be expected. Additionally, these locations, with regard to turbulent penetration or thermal stratification, are likely bounded by volumetric examinations of other ASME Class 1 piping welds conducted under the requirements of other inspection activities such as ASME Section XI, Table IWB-2500-1 or NUREG 0619.

Therefore, SNC concludes that, based on volumetric examinations of bounding locations conducted by other programs, no action need be taken by Plant Hatch regarding this open item.

## ATTACHMENT 3

*Evaluation Data for Screened Locations*

***Location Number 1:***
NPS 4x2 reducers – RPV head vents.

***Applicable P&IDs:***
H16062, H26000

***Applicable Isometric Drawings:***
H16808, S32581

***Material Class and Environment:***
Pipe Specification Class ELA, carbon steel. Exposed to a high temperature steam environment.

***EPRI TR-1000701 Evaluation:***
Component is part of the RPV head vent. Exposed only to steam during normal operations. While turbulence may exist, the steam environment precludes any significant thermal cycling or turbulent penetration. The EPRI Fatigue Management Guideline criteria (as described in Section II of this report) is applicable to water systems only.

***IGSCC Evaluation:***
Components are fabricated from carbon steels. IGSCC is not applicable.

***Make-up Criteria Evaluation:***
The NPS 4x2 reducer is below make-up capability for steam.

***Location Number 2:***
ECP Sensor Enclosures. See Figure 1 for a typical installation.

***Applicable P&IDs:***
H16188, H26036

***Applicable Isometric Drawings:***
H28214
DCP-93-058
DCP-93-059

***Material Class and Environment:***
Pipe Specification Class EAA, wrought 304L and forged F316L stainless steels. Exposed to a high temperature reactor water environment.

***EPRI TR-1000701 Evaluation:***
During normal operations, this enclosure experiences constant flow from the RPV bottom head to recirculation system piping. Therefore, this location does not meet either EPRI Fatigue Management Guideline criteria (as described in Section II of this report).

***IGSCC Evaluation:***
Components fabricated from low carbon austenitic stainless steels. IGSCC may potentially occur. However, the low carbon content reduces this possibility. In addition, the ECP enclosures are opened each refueling cycle such that any excessive degradation or leakage would be noted.

***Make-up Criteria Evaluation:***
The inlet and outlet lines for the NPS 4 components are NPS 2 and, therefore, below make-up capability for water.

***Location Number 3:***
NPS 3x4 concentric expander at RWCU injection to RCIC / Feedwater ( Unit 1 Only)
See Figure 2.

***Applicable P&IDs:***
H16188

***Applicable Isometric Drawings:***
H16889

***Material Class and Environment:***
Pipe Specification Class DLA, carbon steel. Exposed to a reactor water environment.

***EPRI TR-1000701 Evaluation:***
During normal operations, this expander experiences constant flow from the RWCU system into the RCIC injection line. Therefore, this location does not meet either EPRI Fatigue Management Guideline criteria (as described in Section II of this report).

***IGSCC Evaluation:***
Components are fabricated from carbon steels. IGSCC is not applicable.

***Make-up Criteria Evaluation:***
This location exceeds the make-up criteria limit for water.

***Location Number 4:***
NPS 3 piping at RWCU injection to HPCI / Feedwater ( Unit 1 Only)
See Figure 3.

***Applicable P&IDs:***
H16188

***Applicable Isometric Drawings:***
H16869

***Material Class and Environment:***
Pipe Specification Class DLA, carbon steel. Exposed to a reactor water environment.

***EPRI TR-1000701 Evaluation:***
During normal operations, this expander experiences constant flow from the RWCU system into the RCIC injection line. Therefore, this location does not meet EPRI Fatigue Management Guideline criteria (as described in Section II of this report).

***IGSCC Evaluation:***
Components are fabricated from carbon steels. IGSCC is not applicable.

***Make-up Criteria Evaluation:***
This location exceeds the make-up criteria limit for water.

***Location Number 5:***
NPS 3 elbow and NPS 3x4 concentric expander at Main Steam "D" to RCIC steam supply connection (Unit 1 Only).

***Applicable P&IDs:***
H16334

***Applicable Isometric Drawings:***
H16875

***Material Class and Environment:***
Pipe Specification Classes EBD, carbon steel. Exposed to a high temperature steam environment.

***EPRI TR-1000701 Evaluation:***
Component is exposed only to steam during normal operations. While turbulence may exist, the steam environment precludes any significant thermal cycling or turbulent penetration. The EPRI Fatigue Management Guideline criteria (as described in Section II of this report) is applicable to water systems only.

***IGSCC Evaluation:***
Components are fabricated from carbon steels. IGSCC is not applicable.

***Make-up Criteria Evaluation:***
The NPS 3 piping and elbow are below make-up capability for steam.

***Location Number 6:***
MSIV leak-off lines and HPCI / RCIC steam line drains.

***Applicable P&IDs:***
H16062, H26000

***Applicable Isometric Drawings:***
H16809, H16810, H26801

***Material Class and Environment:***
Pipe Specification Classes EBD and DBA, carbon steel. Exposed to a high temperature steam and reactor water environment.

***EPRI TR-1000701 Evaluation:***
Component is potentially exposed to steam and water during normal operations. As such, the potential for thermal stratification does exist. However, no thermal cycling is expected to occur. No turbulence is expected since these components are well away from the process lines. Based on the EPRI Fatigue Management Guideline criteria (as described in Section II of this report), these components would not warrant any special inspections.

***IGSCC Evaluation:***
Components are fabricated from carbon steels. IGSCC is not applicable.

***Make-up Criteria Evaluation:***
The NPS 3 piping sections are below make-up capability for steam.

# VI. Figures

# Figure 1
# Typical ECP Enclosure

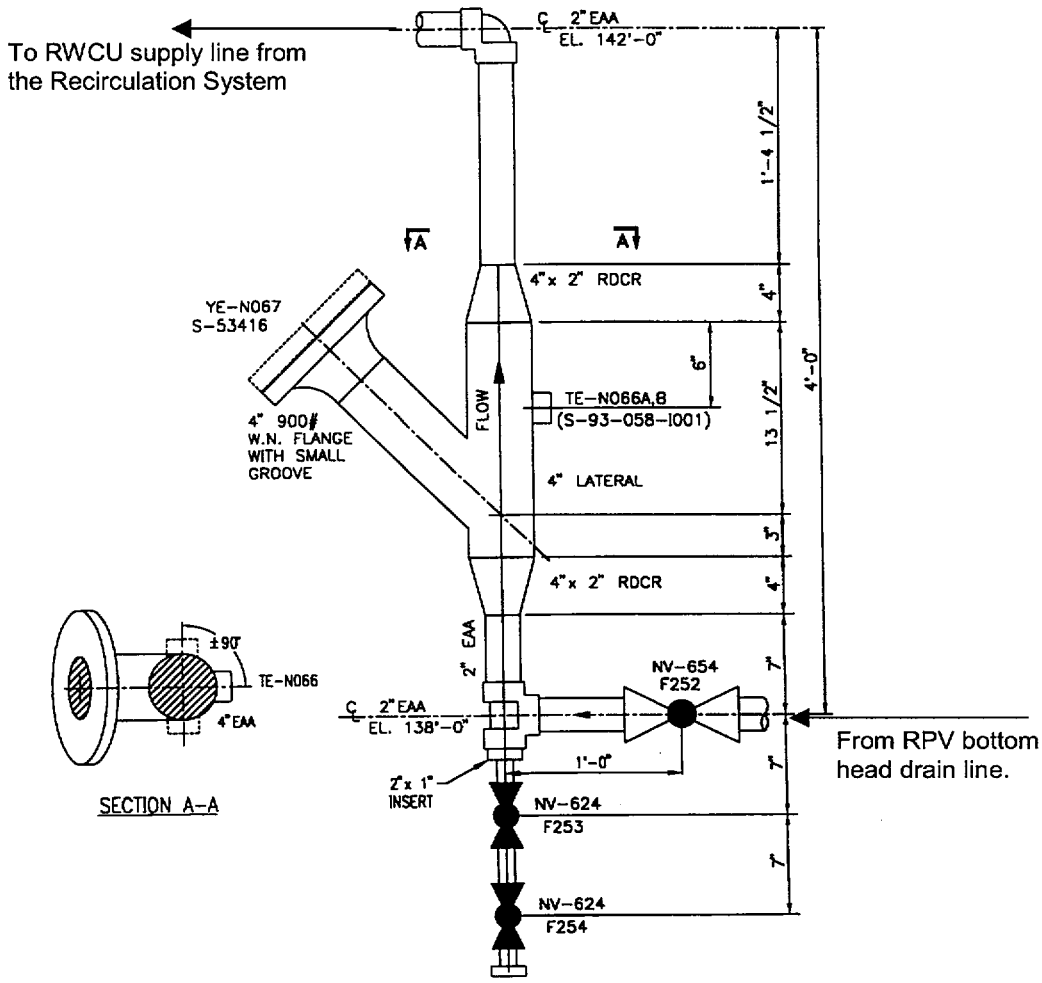

# Figure 2
# 1G31-F039 at RCIC Injection Line

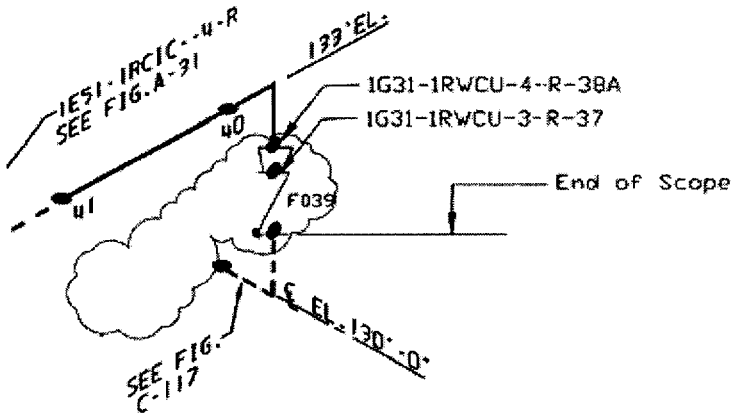
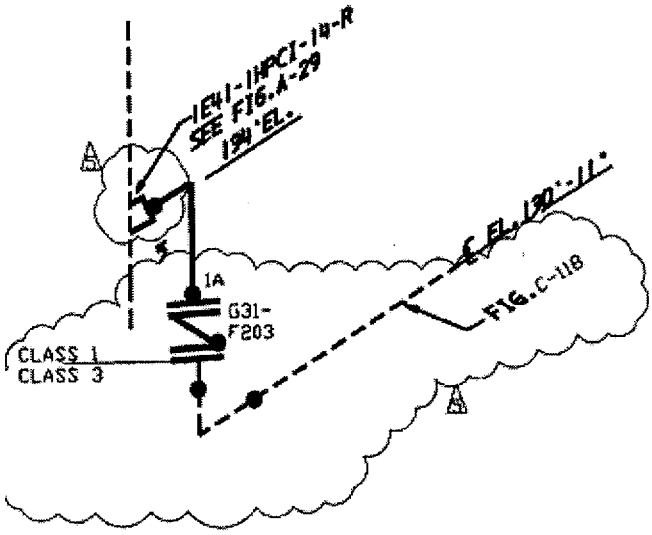
## Figure 3
## 1G31-F203 at HPCI Injection Line