12179-EM-2E

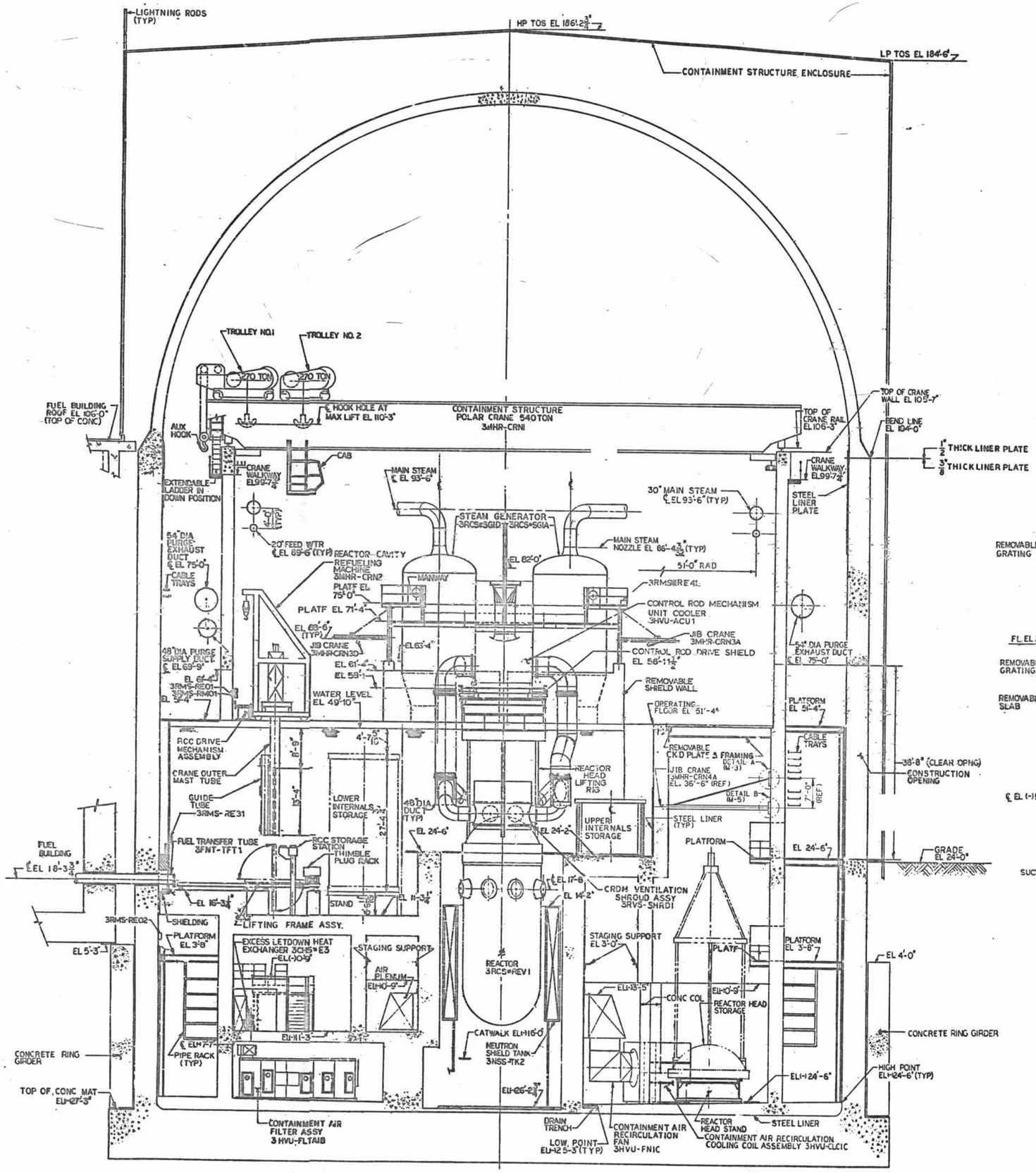

1 – 1
(EM-2A, J-6) (27009)
(EM-2B, J-6) (27010)
(EM-2C, J-6) (27011)
(EM-2D, J-6) (27012)

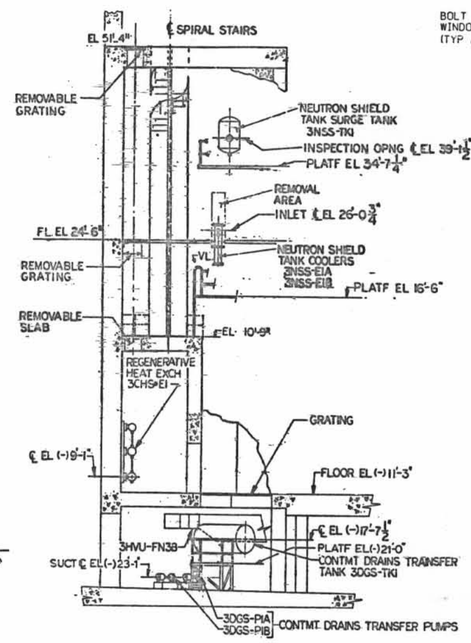

4-4
(EM-2A, B-8) (27009)
(EM-2B, C-8) (27010)
(EM-2C, C-7) (27011)
(EM-2D, C-7) (27012)

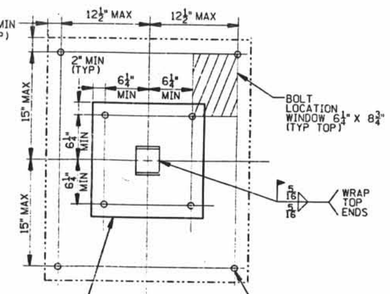

DETAIL A
UPPER PLATE
(ZONE G-8)

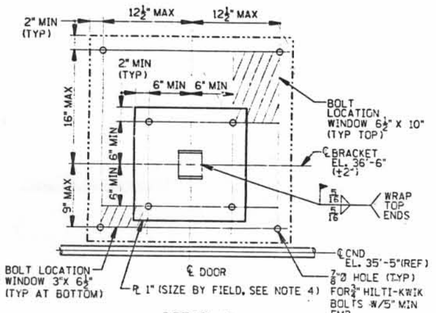

DETAIL B
LOWER PLATE
(ZONE G-8)

NOTES:
1. GENERAL NOTES & REF DWGS EM-2A (27009)
2. PLATE WIDTH KEPT AS SMALL AS POSSIBLE DUE TO THE CURVATURE OF THE CRANE WALL.
3. LOWER PLATE INSTALLED FIRST
4. PLATE SIZE DETERMINED BY MAINTAINING 2" MIN. BOLT EDGE DISTANCE MEASURED PARALLEL TO PLATE EDGE. MAX PLATE SIZE 29" X 29" OR 29" X 34" FOR UPPER PLATE.

D-1

NUCLEAR SAFETY RELATED
QA CAT I & II

C.A.D.
NOTE: MINOR REVISIONS TO THIS DOCUMENT WHEN AS-BUILT ARE PRODUCED. REFER TO GED 3.01 FOR MINOR REVISIONS DURING CONSTRUCTION.

APPROVED Stanley B. Stark
8769

Q.A.

THE MILLSTONE POINT COMPANY
SUBSIDIARY OF
NORTHEAST UTILITIES

MILLSTONE NUCLEAR POWER STATION-UNIT NO.3
MACHINE LOCATION-CONTAINMENT STRUCTURE - SECTION 1-1 & 4-4

DR. G.B./MJC	DATE 9-4-73
SCALE 1/8"-1'-0"	
R.A.# 71-166	MICROFILM SYM.
DWG. NO. 25212-27013	

STONE & WEBSTER ENGINEERING CORPORATION
BOSTON, MASS.

S & W DWG. NO. 12179-EM-2E-12

AREA 4 | LEVEL | WORK PKG 20C

THE INFORMATION ON THIS DRAWING MAY NOT BE COPIED OR USED FOR OTHER THAN THE CONSTRUCTION, MAINTENANCE OR REPAIR OF THE PLANT FACILITY DESCRIBED ON THE TITLE BLOCK.