CP&L
A Progress Energy Company

10 CFR 50.54(f)

Serial: RNP-RA/01-0133

SEP 04 2001

United States Nuclear Regulatory Commission
Attn: Document Control Desk
Washington, DC 20555-0001

H. B. ROBINSON STEAM ELECTRIC PLANT, UNIT NO. 2
DOCKET NO. 50-261/LICENSE NO. DPR-23

SUBMITTAL OF INFORMATION REQUESTED BY
NRC BULLETIN 2001-01, "CIRCUMFERENTIAL CRACKING OF
REACTOR PRESSURE VESSEL HEAD PENETRATION NOZZLES"

Ladies and Gentlemen:

On August 3, 2001, the Nuclear Regulatory Commission (NRC) issued NRC Bulletin 2001-01, "Circumferential Cracking of Reactor Pressure Vessel Head Penetration Nozzles," which requested information related to the structural integrity of the reactor vessel head penetration (VHP) nozzles, including the extent of VHP nozzle leakage and cracking that has been found to date, the inspections and repairs that have been undertaken to satisfy applicable regulatory requirements, and the basis for concluding that plans for future inspections will ensure compliance with applicable regulatory requirements. This NRC Bulletin further required that addressees provide to the NRC a written response in accordance with the provisions of 10 CFR 50.54(f).

H. B. Robinson Steam Electric Plant (HBRSEP), Unit No. 2, provides as Attachment I to this letter the required affidavit in accordance with 10 CFR 50.54(f). Attachment II to this letter provides the specific information requested by the NRC Bulletin.

HBRSEP, Unit No. 2, completed Refueling Outage (RO) - 20 in May 2001 during which extensive visual examinations of the reactor vessel head were performed. The reactor vessel head shroud and insulation were removed for these visual examinations resulting in the performance of a bare-metal visual examination. Additionally, in support of these visual examinations, cleaning of the reactor vessel head was performed. No evidence of VHP nozzle leakage or any other sources of reactor coolant system pressure boundary leakage were identified. The effort expended during RO-20 to clean and visually examine the reactor vessel head provides a sound baseline for future examinations.

A088

Robinson Nuclear Plant
3581 West Entrance Road
Hartsville, SC 29550

The next scheduled refueling outage for HBRSEP, Unit No. 2, is RO-21 which is currently scheduled to begin in October 2002. During this outage, HBRSEP, Unit No. 2, intends to perform a qualified visual examination of the reactor vessel head with the insulation removed. The necessary modeling and analyses will be performed to provide reasonable assurance that this qualified visual examination will provide the capability to detect boric acid deposition resulting from VHP nozzle leakage. Should this modeling and analysis indicate that the proposed visual examination will not provide the requisite level of assurance regarding the ability to detect leakage from VHP nozzle flaws or cracks, a supplemental response will be provided to the NRC to describe additional examinations that will be performed.

HBRSEP, Unit No. 2, will continue to monitor industry progress and developments in the area of VHP nozzle degradation and related non-destructive examination (NDE) techniques to assure that any NDE methodologies employed will accurately identify and characterize flaws or cracks in VHP nozzles and associated weld material.

If you have any questions regarding this matter, please contact Mr. H. K. Chernoff.

Sincerely,

for B. L. Fletcher III
Manager - Regulatory Affairs

CTB/ctb

Attachments:

I. Affidavit
II. Information Requested by NRC Bulletin 2001-01, "Circumferential Cracking of Reactor Pressure Vessel Head Penetration Nozzles"
III. Reactor Vessel Head and Missile Shield Elevations

c: Mr. B. S. Mallett, NRC Regional Administrator (Acting), Region II
Mr. R. Subbaratnam, NRC, NRR
NRC Resident Inspectors

AFFIDAVIT

State of South Carolina
County of Darlington

J. W. Moyer, having been first duly sworn, did depose and say that the information contained in letter RNP-RA/01-0133 is true and correct to the best of his information, knowledge, and belief; and the sources of this information are officers, employees, contractors, and agents of Carolina Power and Light Company.

J Moyer

Sworn to and subscribed before me

this 4th day of September, 20 01

Notary Public for South Carolina

My commission expires: September 13, 2009

H. B. ROBINSON STEAM ELECTRIC PLANT, UNIT NO. 2

INFORMATION REQUESTED BY
NRC BULLETIN 2001-01, "CIRCUMFERENTIAL CRACKING
OF REACTOR PRESSURE VESSEL HEAD PENETRATION NOZZLES"

Requested Information – Item No. 1

1. All addressees are requested to provide the following information:

1.a. The plant-specific susceptibility ranking (including all data used to determine each ranking) using the PWSCC susceptibility model described in Appendix B to the MRP-44, Part 2, report.

Response

H. B. Robinson Steam Electric Plant (HBRSEP), Unit No. 2, has been analyzed for susceptibility to primary water stress corrosion cracking (PWSCC) of vessel head penetration (VHP) nozzles relative to Oconee Nuclear Station Unit 3 (ONS3). This susceptibility ranking was determined using the simplified time-at-temperature model and plant-specific input data as reported within the Electric Power Research Institute (ERPI) Materials Reliability Program (MRP) Report MRP-48, "PWR Materials Reliability Program Response to NRC Bulletin 2001-01," dated August 2001.

Using the MRP approach, HBRSEP, Unit No. 2, was determined to be in the category of plants that are within five (5) Effective Full Power Years (EFPY) of ONS3 as described within NRC Bulletin 2001-01. This approach utilized an operating period of 20.6 EFPY through February 2001, with a vessel head temperature of 598.0°F.

1.b. A description of the VHP nozzles, including the number, type, inside and outside diameters, materials of construction, and the minimum distance between VHP nozzles.

Response

The HBRSEP, Unit No. 2, reactor vessel head is of Westinghouse design and was fabricated by Combustion Engineering. There are 69 reactor vessel head penetrations fabricated from Alloy 600 tube that are welded to a stainless steel flange. This assembly is then welded to the low alloy steel of the reactor vessel

head utilizing INCONEL Welding Electrode 182 (Alloy 182, ENiCrFe-3) in a J-groove weld configuration.

A review of fabrication records for the HBRSEP, Unit No. 2, reactor vessel head indicates that the penetrations were fabricated from nine different heats of Alloy 600 material. These materials were provided by Huntington, who was the material supplier for the HBRSEP, Unit No. 2, reactor vessel head penetrations.

Pertinent details of the HBRSEP, Unit No. 2, VHPs are provided in the following table:

VHP Pitch (Center-to-Center)	11.973 inches
VHP Internal Diameter	2.735 to 2.765 inches
VHP Outer Diameter (Nominal)	4.000 inches
Minimum Distance (Pitch minus Outer Diameter)	7.973 inches
Design Nozzle Interference Fit	0.0 to 0.003 inches

1.c. A description of the RPV head insulation type and configuration.

Response

As identified within Table 1 of MRP-48, HBRSEP, Unit No. 2, has "blanket contoured" insulation installed on the reactor vessel head. This insulation was installed by a plant modification during Refueling Outage (RO) - 20, completed in May 2001, which upgraded and replaced older metallic thermal insulation. The new insulation lies on the reactor vessel head and is installed in two layers with the blankets traversing the head between the VHPs. This plant modification provides for improved installation and removal of reactor vessel head insulation, which in turn reduces worker exposure and better-facilitates future reactor vessel head inspections.

1.d. A description of the VHP nozzle and RPV head inspections (type, scope, qualification requirements, and acceptance criteria) that have been performed in the past 4 years, and the findings. Include a description of any limitations (insulation or other impediments) to accessibility of the bare metal of the RPV head for visual examinations.

Response

Recent Inspection History – Inservice Inspections

In each of the past three refueling outages, inservice pressure testing of the code class pressure retaining components of the reactor coolant system (RCS) was performed in accordance with the American Society of Mechanical Engineers (ASME) Boiler and Pressure Vessel (B&PV) Code, Section XI, Table IWB-2500-1, Examination Category B-P, Item No. B15.10, "Pressure Retaining Boundary," and Article IWA-5000, "System Pressure Tests." This testing was accomplished by Engineering Surveillance Test (EST) - 083, "Inservice Inspection Pressure Testing of Reactor Coolant System (Refueling Interval)," which included both a VT-2 visual examination of pressure retaining bolted connections and a VT-2 visual examination of the head during inservice leakage testing. The acceptance criteria for EST-083 included the requirement that "no through wall leakage exists on any piping system examined during the performance of this procedure."

VT-2 visual examination of bolted connections was performed at the start of each refueling outage in accordance with specific criteria provided within EST-083. Under the examination area identified as "Control Rod Drive Housing Area," the following components/areas were specifically identified:

- Canopy seal welds
- Penetration tubes surface
- Penetration tube/head insulation interface - particularly the outer three rows
- Around the inside of the control rod drive mechanism (CRDM) cooling duct shroud
- Conoseal bolting (five places)

A note associated with this component listing states to "view as much of the above items as possible from all accessible areas." In the event that leakage had been observed during these visual examinations, plant engineering personnel would have reviewed the examination results in accordance with plant procedures for implementation of NRC Generic Letter 88-05, "Boric Acid Corrosion of Carbon Steel Reactor Pressure Boundary Components in PWR Plants."

The VT-2 visual examination during RCS inservice leakage testing was performed at the conclusion of each refueling outage in accordance with specific criteria provided within EST-083, e.g., RCS at nominal operating pressure of 2235 psig. Examination areas specifically identified included the "Control Rod Drive Housing Area" and the "Reactor Vessel Stud Area." Personnel performing VT-2 visual examinations in accordance with EST-083 were certified and qualified to Level II or higher in accordance with non-destructive examination procedures.

The following table provides the results of VT-2 visual examinations performed during the past four years in accordance with EST-083 for the examination area identified as the "Control Rod Drive Housing Area:"

Calendar Year	Refueling Outage	Results
1998	RO-18	No indications of VHP leakage
1999	RO-19	No indications of VHP leakage
2001	RO-20	No indications of VHP leakage

Recent Inspection History – RO-20 Bare-Metal Visual Examination

Prior to RO-20, HBRSEP, Unit No. 2, was aware of operating experience from the Virgil C. Summer Nuclear Station regarding small primary system leaks. This information increased the emphasis on and sensitivity to the RCS visual examinations performed in accordance with EST-083 and NRC Generic Letter 88-05.

During RO-20 activities to detension the reactor vessel head studs, evidence of primary system leakage was identified on the surface of the reactor vessel head, including the reactor vessel head insulation and CRDM housings. These indications were investigated via VT-2 visual examination on April 14, 2001, with the reactor vessel head insulation in place. The source of this leakage was identified as the canopy seal weld at CRDM location B10. This VT-2 visual examination included the lower canopy seal welds on CRDMs in the area of location B10 using direct visual examination for accessible surfaces and a magnifying mirror for surfaces that were not directly accessible.

Prior to performing additional, follow-up examinations, the VT-2 qualified inspectors were briefed on the issue of VHP leakage at ONS3. Verbal descriptions of the characteristics of ONS3 boron deposits indicative of VHP nozzle leakage were obtained from ONS3 personnel and were supplemented by videotapes. This information was used during briefing of the inspectors to improve their sensitivity to the detection of VHP nozzle leakage.

A second examination was performed by VT-2 qualified inspectors on April 15, 2001, with the lower shroud partially removed and metallic thermal insulation removed from areas exposed to boric acid in an area approximately two feet wide by seven feet long, i.e., two rows of CRDMs. Some boric acid deposition on the reactor vessel head was noted and attributed to leakage flowing onto the reactor vessel head from the canopy seal weld above. None of this deposition was attributed to leakage or degradation of the VHP nozzle welds or Alloy 600 material.

A third examination was performed by VT-2 qualified inspectors on April 16, 2001, after boric acid deposits had been cleaned from the examination area. This examination was focused on determining if corrosion damage was present on the reactor vessel head or other components that may have been subjected to boric acid deposition. Scattered areas of light to medium rust were noted, with no evidence of metal loss or pitting detected. The area of interface between the reactor vessel head and CRDM nozzles was inspected with no distorted metal or discoloration noted.

On April 19, 2001, an additional visual examination of the CRDMs and reactor vessel head was performed. Personnel performing this examination were VT-2 qualified and had been briefed on the ONS3 information. The acceptance criteria were provided by EST-083, as described above, and by plant procedures implementing the requirements of NRC Generic Letter 88-05. This inspection was performed with the reactor vessel head shroud and insulation removed, i.e., bare-metal visual examination. Due to minor interferences or obstructions between the VHP nozzles and the reactor vessel head, a full 360 degrees could not be completed on every nozzle. However, each VHP nozzle was inspected to the extent necessary to ascertain that no upward boron leakage pattern existed as seen within the ONS3 videotape. No metal discoloration or new boron deposition was identified.

1.e. A description of the configuration of the missile shield, the CRDM housings and their support/restraint system, and all components, structures, and cabling from the top of the RPV head up to the missile shield. Include the elevations of these items relative to the bottom of the missile shield.

Response

Engineered Safety Features and associated systems are protected from loss of function due to dynamic effects and missiles that might result from a loss-of-coolant accident (LOCA). Protection is provided by missile shielding or segregation of redundant components. The HBRSEP, Unit No. 2, design was to protect, when necessary, against the generation of missiles rather than to allow missile formation and then to contain their effects.

Attachment III provides a diagram indicating the relative elevations of key structures associated with the reactor vessel head and missile shield. The missile shield structure was designed as Seismic Class I and consists of an approximately three-foot thick, concrete slab situated above the CRDMs by a beam structure that is anchored to the primary shield. The design of this structure minimizes the potential damage that could be caused by an ejected control rod and CRDM during a postulated rupture of the pressure housing.

A CRDM seismic support structure is provided that consists of four tie-rods attached to the primary shield and to the CRDM support ring. The tie-rods are spaced to provide one support point per quadrant.

The CRDMs and rod position indication system have cables that exit the top of each housing and are routed to the top of the refueling cavity, just above the refueling deck, which is at the 275-foot elevation. Mechanically interconnected systems on the reactor vessel head, such as the reactor vessel head venting system, are described within the HBRSEP, Unit No. 2, Updated Final Safety Analysis Report (UFSAR), Section 5.0, "Reactor Coolant System and Connected Systems."

Requested Information - Item No. 2

2. Specific information is requested for plants that have previously experienced either leakage from or cracking in VHP nozzles.

Response

HBRSEP, Unit No. 2, has not experienced VHP nozzle cracking or leakage.

Requested Information - Item No. 3

3. If the susceptibility ranking for your plant is within 5 EFPY of ONS3, addressees are requested to provide the following information:

   a. Plans for future inspections (type, scope, qualification requirements, and acceptance criteria) and the schedule.

   Response

   The current state of industry evaluation and analysis techniques, combined with plant-specific fabrication and operating history, indicates that HBRSEP, Unit No. 2, is within 5 EFPY of the ONS3 threshold relative to PWSCC of VHP nozzles. The recently completed VT-2 visual examinations of the reactor vessel head, described under Item 1.d above, did not identify VHP nozzle leakage and provide a baseline condition for reference during future inspections.

   The next opportunity for inspection of the HBRSEP, Unit No. 2, reactor vessel head will occur during Refueling Outage (RO) - 21, which is currently scheduled to begin in October 2002. Inspection plans for VHP nozzles that will be implemented during this outage include the following:

   Type and Scope

   A qualified visual examination of the reactor vessel head will be performed with the insulation removed. The scope of this examination will include each of the reactor vessel head VHP nozzles. The necessary modeling and analyses will be performed to provide reasonable assurance that this qualified visual examination will provide the capability to detect boric acid deposition resulting from VHP nozzle leakage. Should this modeling and analysis indicate that the proposed visual examination will not provide the requisite level of assurance regarding the ability to detect leakage from VHP nozzle flaws or cracks, a supplemental response will be provided to the NRC to describe additional examinations that will be performed.

   Qualification Requirements

   Personnel performing the qualified visual examination of the reactor vessel head VHP nozzles will be qualified at the VT-2 visual examination level or higher in accordance with plant procedures.

Acceptance Criteria

The conditions and acceptance criteria for the qualified visual examination of reactor vessel head VHP nozzles will be prescribed within plant procedures. The acceptance criteria for this examination will be consistent with current plant procedures for ASME Code examinations, NRC Generic Letter 88-05, and the plant Technical Specifications, i.e., no pressure boundary leakage.

HBRSEP, Unit No. 2, intends to monitor the results of inspections performed by other utilities, and the results of industry-sponsored efforts to better understand the contributors to and potential effects of PWSCC of VHP nozzles. Additionally, HBRSEP, Unit No. 2, will continue to monitor industry efforts to develop and demonstrate reliable non-destructive examination (NDE) techniques for examination of VHP nozzle penetrations. Plans for future reactor vessel head inspections may be modified, where appropriate, to incorporate "lessons learned" from other utilities and to assure that proposed inspection techniques will produce accurate and reliable results.

b. Basis for concluding that the inspections identified in 3.a. will assure that regulatory requirements are met (see Applicable Regulatory Requirements section). Include the following specific information in this discussion:

(1) If future inspection plans do not include performing inspections before December 31, 2001, provide the basis for concluding that the regulatory requirements discussed in the Applicable Regulatory Requirements section will continue to be met until the inspections are performed.

Response

The "Applicable Regulatory Requirements" identified within NRC Bulletin 2001-01 are as follows:

- 10 CFR 50, Appendix A, "General Design Criteria for Nuclear Power Plants," including the following:

  Criteria 14, "Reactor Coolant Pressure Boundary"
  Criteria 31, "Fracture Prevention of Reactor Coolant Boundary"
  Criteria 32, "Inspection of Reactor Pressure Coolant Pressure Boundary"

- 10 CFR 50.55a, "Codes and Standards"
- 10 CFR 50, Appendix B, "Quality Assurance Criteria for Nuclear Power Plants and Fuel Reprocessing Plants," Criteria V, IX, and XVI
- Technical Specifications

The following provides a description of how HBRSEP, Unit No. 2, satisfies these regulations and requirements, and how continued compliance will be maintained until future inspection plans have been implemented.

General Design Criteria

The General Design Criteria (GDC) in existence at the time HBRSEP, Unit No. 2, was licensed for operation (July 1970) were contained in the proposed Appendix A to 10 CFR 50, "General Design Criteria for Nuclear Power Plants," published in the Federal Register on July 11, 1967. HBRSEP, Unit No. 2, conformance with these Proposed GDC is described within UFSAR Section 3.1, "Conformance With General Design Criteria." Applicability of these Proposed GDC to NRC Bulletin 2001-01 is discussed below.

Proposed GDC 9 provides the HBRSEP, Unit No. 2, design criteria that is comparable to the current GDC 14. This Proposed GDC states the following:

> "The reactor coolant pressure boundary (RCPB) shall be designed, fabricated, and constructed so as to have an exceedingly low probability of gross rupture or significant uncontrolled leakage throughout its design lifetime."

A discussion of HBRSEP, Unit No. 2, compliance with Proposed GDC 9 is provided within UFSAR Section 3.1.2.9. Previous visual examinations of the HBRSEP, Unit No. 2, reactor vessel head have not identified VHP nozzle leakage. Based on the above, and industry experience to-date regarding the low levels of primary system leakage resulting from VHP nozzle leakage, HBRSEP, Unit No. 2, remains in compliance with the reactor coolant pressure boundary design criteria as set forth within Proposed GDC 9.

Proposed GDC 34 provides the HBRSEP, Unit No. 2, design criteria that is comparable to the current GDC 31. This Proposed GDC states the following:

> "The RCPB shall be designed and operated to reduce to an acceptable level the probability of rapidly propagating type failure. Consideration is given:
>
> a) To the provisions for control over service temperature and irradiation effects which may require operational restrictions.
>
> b) To the design and construction of the reactor pressure vessel (RPV) in accordance with applicable codes, including those which establish requirements for absorption of energy within the elastic strain energy range, and for absorption of energy by plastic deformation.
>
> c) To the design and construction of RCPB piping and equipment in accordance with applicable codes."

A discussion of HBRSEP, Unit No. 2, compliance with Proposed GDC 34 is provided within UFSAR, Section 3.1.2.34. Previous visual examinations of the HBRSEP, Unit No. 2, reactor vessel head have not identified VHP nozzle leakage. Based on the above and industry experience to-date regarding flaw development and propagation in VHP nozzles, HBRSEP, Unit No. 2, remains in compliance with Proposed GDC 34 regarding rapidly propagating type failures of the reactor coolant pressure boundary.

Proposed GDC 36 provides the HBRSEP, Unit No. 2, design criteria that is comparable to the current GDC 32. This Proposed GDC states the following:

> "RCPB components shall have provisions for inspection, testing, and surveillance of criteria areas by appropriate means to assess the structural and leaktight integrity of the boundary components during their service lifetime. For the reactor vessel, a material surveillance program conforming with the current applicable codes shall be provided."

A discussion of HBRSEP, Unit No. 2, compliance with Proposed GDC 36 is provided within UFSAR, Section 3.1.2.36. This UFSAR section states that the design of the reactor vessel and its arrangement in the system permits access to the entire internal surfaces of the vessel and to the external surfaces of the vessel including "the closure head except around the drive mechanism adapters." As such, limitations regarding the accessibility of the VHP nozzles for inspection were known during licensing of HBRSEP, Unit No. 2. However, this licensed condition does not supersede Technical Specification and ASME Code requirements that prohibit RCS pressure boundary leakage. The future inspection plans described under Item 3.a above have been developed with the intent of performing a qualified visual examination of the reactor vessel head with the capability to detect boric acid deposition resulting from VHP nozzle leakage. HBRSEP, Unit No. 2, remains in compliance with Proposed GDC 36 regarding the capability for RCPB inspection and surveillance.

In addition to the design elements discussed above, the bare-metal visual examination of the HBRSEP, Unit No. 2, reactor vessel head during RO-20 provides an additional measure of assurance regarding VHP nozzle integrity until the next scheduled examinations are performed during RO-21. Based on the information available to-date, it is reasonable to expect that leakage into the annulus area above the J-groove weld would have resulted in boric acid deposition on the reactor vessel head. Preliminary information available during RO-20, and later published in the interim EPRI Report, "PWR Materials Reliability Project Interim Alloy 600 Safety Assessments for US PWR Plants (MRP-44), Part 2: Reactor Vessel Top Head Penetrations," dated May 2001, indicated that the interference fit of up to 95% of the VHP nozzles on vessels similar to HBRSEP, Unit No. 2, would be equal to or less than the interference fit that had been analyzed and demonstrated as showing boric acid deposition when a through-wall leak occurred. Further, the HBRSEP, Unit No. 2, VHPs were fabricated from materials manufactured by Huntington (reference MRP-44 and Item 1.b above). None of the previously identified VHP nozzle leaks have been associated with VHP nozzles fabricated from materials supplied by Huntington.

10 CFR 50.55a, Codes and Standards

10 CFR 50.55a, "Codes and Standards," requires that inservice inspection and testing be performed in accordance with the requirements of the ASME B&PV Code, Section XI, "Inservice Inspection of Nuclear Plant Components." Section XI contains applicable rules for examination, evaluation, and repair of code class components, including the RCS pressure boundary.

The HBRSEP, Unit No. 2, Third Ten-Year Inservice Inspection (ISI) Interval, which commenced on February 19, 1992, has been implemented in accordance with the ASME B&PV Code, 1986 Edition with no Addenda. Examination requirements applicable to VHP nozzles are contained within Table IWB-2500-1, Examination Category B-E, "Pressure Retaining Partial Penetration Welds in Vessels." The required extent and frequency of examination is a VT-2 visual examination of 25% of the vessel nozzles from the external surface. Since the reactor vessel head is insulated and the VHP nozzles do not represent a bolted connection, Article IWA-5000, "System Pressure Tests," subsection IWA-5242, "Insulated Components," permits these inspections to be performed without removal of insulation.

The HBRSEP, Unit No. 2, Fourth Ten-Year ISI Interval will commence on February 19, 2002, and will be implemented in accordance with the ASME B&PV Code, 1995 Edition with 1996 Addenda. This edition of the Code has removed Examination Category B-E, since VHP nozzles are examined as part of RCS leakage testing performed under Examination Category B-P, "All Pressure Retaining Components." Examination Category B-P requires a VT-2 visual examination of the reactor vessel pressure retaining boundary each refueling outage. Similar to the 1986 Edition of the Code, Article IWA-5000, "System Pressure Tests," subsection IWA-5242, "Insulated Components," permits these inspections to be performed without removal of insulation.

The Acceptance Standard provided within both the 1986 and 1995 Editions of the Code for the referenced VT-2 visual examinations is identified as IWB-3522, which requires correction of pressure boundary leakage prior to continued service.

As described under Item 1.d above, HBRSEP, Unit No. 2, has and maintains procedures and programs to implement ASME Code requirements relative to VHP nozzles. The acceptance criterion for these procedures is that no through-wall leakage exists. No VHP nozzle leakage has been identified during previous reactor vessel head examinations. In the event that VHP nozzle leakage is identified during future examinations, corrective actions will be taken in accordance with plant procedures and the ASME Code prior to continued plant operation.

As previously noted, a bare-metal visual examination of the reactor vessel head was performed during RO-20 in May 2001. No evidence of VHP nozzle leakage or any other sources of reactor coolant system pressure boundary leakage were identified. A qualified visual examination is planned for RO-21.

10 CFR 50, Appendix B

NRC Bulletin 2001-01 identified the following Criteria of 10 CFR 50, Appendix B, as being applicable to VHP nozzle degradation and leakage:

- Criterion V, "Instructions, Procedures, and Drawings"
- Criterion IX, "Control of Special Processes"
- Criterion XVI, "Corrective Action"

HBRSEP, Unit No. 2, has and maintains the required instructions, procedures, and drawings for special processes and activities affecting quality to satisfy the requirements of 10 CFR 50, Appendix B, Criterion V and IX. As an additional action to assure the integrity of VHP nozzles, HBRSEP, Unit No. 2, intends to perform a qualified visual examination of the reactor vessel head with the insulation removed during RO-21. The scope of this examination will include each of the VHP nozzles. The necessary modeling and analyses will be performed to provide reasonable assurance that this qualified visual examination will provide the capability to detect boric acid deposition resulting from VHP nozzle leakage. Should this modeling and analysis indicate that the proposed visual examination will not provide the requisite level of assurance regarding the ability to detect leakage from VHP nozzle flaws or cracks, a supplemental response will be provided to the NRC to describe additional examinations that will be performed. Examinations or special processes performed during RO-21 will be implemented using appropriate instructions, procedures, or drawings in accordance with Criterion V and IX.

10 CFR 50, Appendix B, Criterion XVI, requires that measures be established to assure that conditions adverse to quality are promptly identified and corrected. Additionally, significant conditions adverse to quality will have the cause determined and corrective actions taken to preclude repetition. HBRSEP, Unit No. 2, has and maintains programs and procedures to satisfy the requirements of Criterion XVI. As described under Item 1.d above, previous inspection activity has not identified VHP nozzle leakage. As further noted under Item 3.a above, HBRSEP, Unit No. 2, will perform a qualified visual examination of the reactor vessel head with the insulation removed during RO-21. Additionally, HBRSEP, Unit No. 2, will monitor the results of VHP inspections performed by other utilities, and the results of industry-sponsored efforts to better understand the contributors to and potential effects of PWSCC of VHP nozzles. Industry efforts will also be monitored relative to the development and demonstration of reliable NDE techniques for examination of VHP nozzle penetrations. Plans for future reactor vessel head inspections may be modified, where appropriate, to incorporate "lessons learned" from other utilities and to assure that proposed inspection techniques will produce accurate and reliable results. These actions are consistent with 10 CFR 50, Appendix B, Criterion XVI, and with the discussion of Criterion XVI provided within NRC Bulletin 2001-01.

Technical Specifications

10 CFR 50.36, "Technical Specifications," provides requirements for Technical Specifications (TS) for licenses associated with production and utilization facilities. 10 CFR 50.36(c)(2) provides requirements specific to "Limiting Conditions for Operation," and 10 CFR 50.36(c)(3) provides requirements relative to "Surveillance Requirements." The HBRSEP, Unit No. 2, Operating Licensing and TS were developed and approved in accordance with these requirements and provide Limiting Conditions for Operation (LCO), Action Statements, and Surveillance Requirements (SR) regarding the RCS pressure boundary.

HBRSEP, Unit No. 2, TS 3.4.13, "RCS Operational Leakage," provides criteria and limits regarding primary system leakage, including LCO 3.4.13 which prohibits RCS pressure boundary leakage. Should pressure boundary leakage exist, Condition B would be entered which requires the unit to enter MODE 3 in six hours and MODE 5 in 36 hours. Verification that RCS operational leakage is within limits by performance of an RCS water inventory balance is performed every 72 hours during steady state operation in accordance with SR 3.4.13.1.

As noted above under the General Design Criteria discussion, and as indicated within the HBRSEP, Unit No. 2, TS Bases for LCO 3.4.13, the RCS leakage detection systems provide the means to detect RCS leakage to the extent practical. Industry experience from VHP nozzle leakage has shown that the associated primary system leakage can be well below TS limits and the sensitivity of on-line leakage detection systems. An RCS leak of sufficient magnitude to be detected by on-line leak detection systems would be evaluated in accordance with TS requirements and the appropriate actions taken. The current HBRSEP, Unit No. 2, TS requirements, e.g., LCOs and SRs, are consistent with the requirements of 10 CFR 50.36 and specify actions to maintain plant operations within analysis and design limits.

(2) If future inspection plans include only visual inspections, discuss the corrective actions that will be taken, including alternative inspection methods (for example, volumetric examination), if leakage is detected.

Response

Should future visual examinations identify VHP nozzle leakage, appropriate actions will be taken in accordance with plant procedures and ASME Code requirements to characterize the associated cracks or flaws. Such an approach would involve the use of appropriate NDE techniques for characterization of cracks or flaws, and would use a repair/replacement strategy consistent with the ASME Code, Section XI, Article IWA-4000, "Repair/Replacement Activities." Inspection of additional VHPs using appropriate NDE techniques would be performed in order to establish the extent of condition.

Requested Information – Item No. 4

4. Information is requested for plants with susceptibility rankings greater than 5 EFPY and less than 30 EFPY of ONS3.

Response

Since the HBRSEP, Unit No. 2, susceptibility ranking is within five (5) EFPY of ONS3, this item is not applicable.

Requested Information – Item No. 5

5. Addressees are requested to provide the following information within 30 days after plant restart following the next refueling outage:

   a. A description of the extent of VHP nozzle leakage and cracking detected at your plant, including the number, location, size, and nature of each crack detected.

   b. If cracking is identified, a description of the inspections (type, scope, qualification requirements, and acceptance criteria), repairs, and other corrective actions taken to satisfy applicable regulatory requirements. This information is requested only if there are any changes from prior information submitted in accordance with this bulletin.

Response

HBRSEP, Unit No. 2, will provide the requested information within 30 days following restart from the next scheduled refueling outage, i.e., RO-21, which is currently scheduled to begin in October 2002.
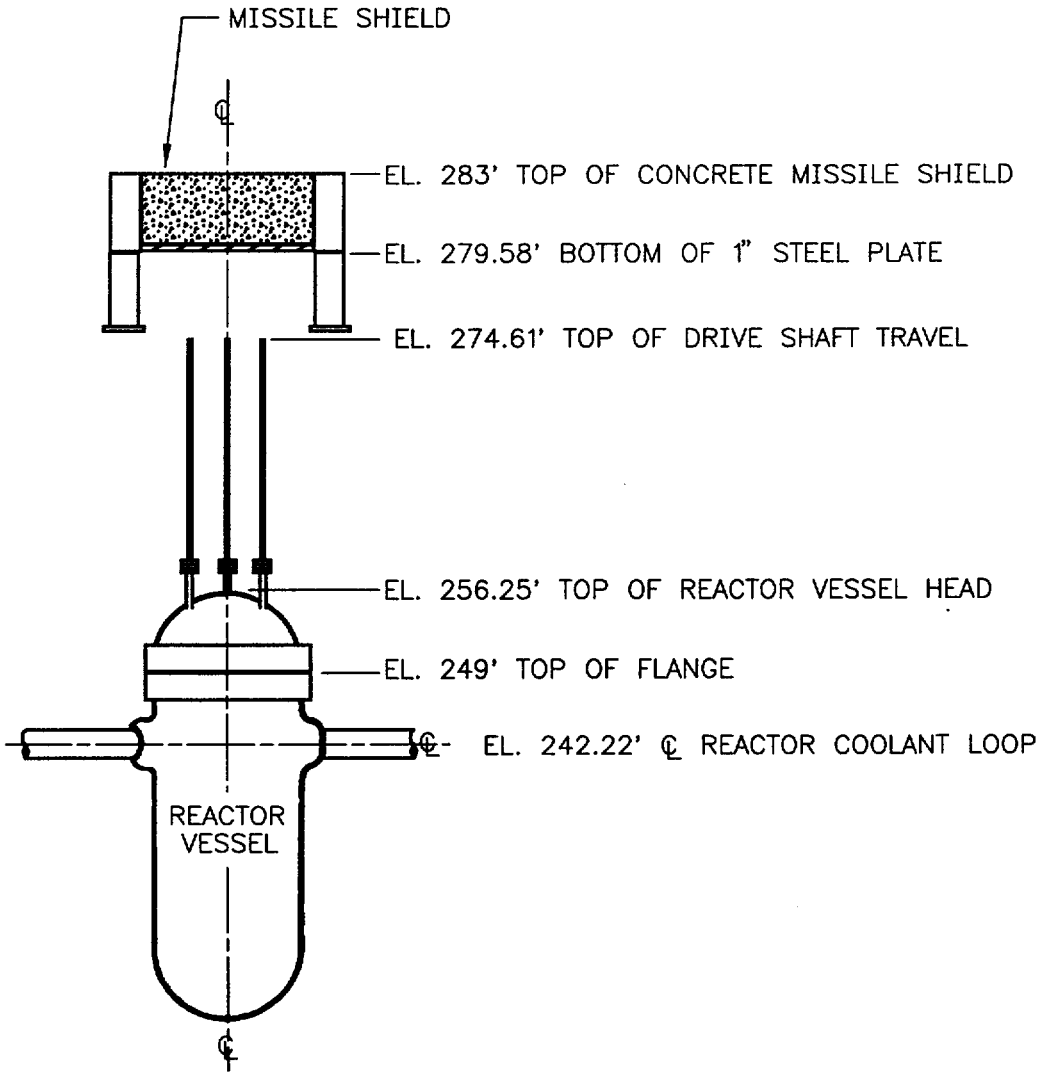
Reactor Vessel Head and Missile Shield Elevations