STONE & WEBSTER, INC.

5010.64

CALCULATION SHEET

CLIENT & PROJECT	PAGE 1 OF 53
PRIVATE FUEL STORAGE, LLC – PFSF	+ 6 pp of ATTACHMENTS
CALCULATION TITLE	QA CATEGORY (✓)
STABILITY ANALYSES OF CANISTER TRANSFER BUILDING	☑ I NUCLEAR SAFETY RELATED ☐ II ☐ III ☐ (other)

CALCULATION IDENTIFICATION NUMBER				OPTIONAL WORK PACKAGE NO.
JOB ORDER NO.	DISCIPLINE	CURRENT CALC NO	OPTIONAL TASK CODE	
05996.02	**G(B)**	**13**		

APPROVALS - SIGNATURE & DATE			REV. NO. OR NEW CALC NO.	SUPERSEDES CALC NO. OR REV NO.	CONFIRMATION REQUIRED ☑	
PREPARER(S)/DATE(S)	REVIEWER(S)/DATES(S)	INDEPENDENT REVIEWER(S)/DATE(S)			YES	NO
Original Signed By: LPSingh / 12-9-98	Original Signed By: DLAloysius / 12-10-98	Original Signed By: DLAloysiu / 12-10-98	0	N/A		✓
Original Signed By: DLAloysius / 9-3-99 SYBoakye / 9-3-99 *See page 2-1 for ID of*	Original Signed By: SYBoakye / 9-3-99 DLAloysius / 9-3-99 *Prepared / Reviewed By*	Original Signed By: TYChang / 9-3-99 TYChang / 9-3-99	1	G(C)-13 Rev. 0		✓
Original Signed By: PJTrudeau / 1-21-00	Original Signed By: TYChang / 1-21-00	Original Signed By: TYChang / 1-21-00	2	1		✓
Original Signed By: PJTrudeau / 6-19-00	Original Signed By: TYChang / 6-19-00	Original Signed By: TYChang / 6-19-00	3	2		✓
Original Signed By: SYBoakye / 3-30-01	Original Signed By: TYChang / 3-30-01	Original Signed By: TYChang / 3-30-01	4	3		✓
PJTrudeau / 5-31-01 Paul J. Trudeau	TYChang / 5-31-01 Thomas Y. Chang	TYChang / 5-31-01 Thomas Y. Chang	5	4		✓

DISTRIBUTION

GROUP	NAME & LOCATION	COPY SENT (✓)	GROUP	NAME & LOCATION	COPY SENT (✓)
RECORDS MGT. FILES (OR FIRE FILE IF NONE)	JOB BOOK R4.2G	ORIG			
	FIRE FILE - Denver	☑			
Geotechnical	PJTrudeau – Stoughton/3	☑			

TABLE OF CONTENTS

TABLE OF CONTENTS 2

RECORD OF REVISIONS 3

OBJECTIVE 6

ASSUMPTIONS/DATA 6

GEOTECHNICAL PROPERTIES 7

METHOD OF ANALYSIS 10

ANALYSIS OF OVERTURNING STABILITY 11

Checking overturning about the N-S axis *11*

Checking overturning about the E-W axis *13*

ANALYSIS OF SLIDING STABILITY 15

Sliding Stability of the Canister Transfer Building on In Situ Clayey Soils *15*

Sliding Stability of the Canister Transfer Building on Cohesionless Soils *18*

ALLOWABLE BEARING CAPACITY 24

Bearing Capacity Factors *24*

Shape Factors 25

Depth Factors 25

Inclination Factors 25

Static Bearing Capacity of the Canister Transfer Building *26*

Dynamic Bearing Capacity of the Canister Transfer Building *29*

CONCLUSIONS 37

OVERTURNING STABILITY OF THE CANISTER TRANSFER BUILDING 37

SLIDING STABILITY OF THE CANISTER TRANSFER BUILDING 37

BEARING CAPACITY 38

Static Bearing Capacity of the Canister Transfer Building *38*

Dynamic Bearing Capacity of the Canister Transfer Building *38*

REFERENCES 40

TABLES 41

FIGURES 46

ATTACHMENTS

A Table 6 from Calc 05996.02-G(B)-05-2 re Strength of Clayey Silt 1 page

B Annotated copies of CPT-37 & CPT-38 Showing Relative Difference Between Deeper Lying Soils and Those Tested in UU & CU Triaxial Tests At Depths ~10 Ft 2 pages

C Annotated Copies of Direct Shear Test Plots of Horizontal Displacement vs Shear Stress 3 pages

RECORD OF REVISIONS

REVISION 0

Original Issue

REVISION 1

Page count increased from 37 to 63.

- Revised seismic loadings to correspond to the PSHA 2,000-yr return period earthquake (p. 9-1)
- Added section on dynamic strength of soils (p. 9-3)
- Added section on seismic sliding resistance of the mat foundation (p. 9-5)
- Added section on evaluation of sliding on a deep slip surface (p. 9-8)
- Updated bearing capacity analysis using revised seismic loadings (p. 34-1)
  - Added additional loading combination: static + 40% seismic uplift + 100% in x (N-S) direction + 40% in z (E-W) direction
- Added additional references (p. 36-1)

NOTE:
SYBoakye prepared/DLAloysius reviewed pp. 9-8 through 9-12. Remaining pages prepared by DLAloysius and reviewed by SYBoakye.

REVISION 2

Major re-write of the calculation.

1. Renumbered pages and figures to make the calculation easier to follow.
2. Changed effective length of mat to 265 ft to make it consistent with Calculation 05996.02-SC-4, Rev 1 (SWEC, 1999a).
3. Added overturning analysis.
4. Corrected calculation of moments for joints 3 and 6 in Table 2.6-11 and incorporated revised seismic loads in calculations of overturning stability and dynamic bearing capacity.
5. Revised dynamic bearing capacity analyses to utilize only total strength parameters because these partially saturated soils will not have time to drain fully during the rapid cycling associated with the design basis ground motion. See Calculation 05996.02-G(B)-05-1 (SWEC, 1999b) for additional details.
6. Updated references to current issues of drawings.

7. Added references to foundation profiles through Canister Transfer Building area presented in SAR Figures 2.6-21 through 23.
8. Deleted analyses of bearing capacity on layered profile, as adequate factors of safety are obtained conservatively assuming that the total strengths measured for the clayey soils in the upper ~25' to 30' layer apply for the entire profile under the Canister Transfer Building and revised all of the detailed bearing capacity analyses.
9. Changed "Load Combinations" to "Load Cases" and defined these cases to be consistent throughout the various stability analyses included herein. These are the same cases as are used in the stability analyses of the cask storage pads, Calculation 05996.02-G(B)-04-5 (SWEC, 2000).
10. Added analysis of sliding on a deep plane at the top of silty sand/sandy silt layer, incorporating passive resistance acting on the block of clayey soil and the foundation mat overlying this interface.
11. Revised Conclusions to reflect results of these changes.

REVISION 3

1. Added a 1-ft deep key around the perimeter of the Canister Transfer Building mat to permit use of the cohesive strength of the in situ silty clay/clayey silt in resisting sliding due to loads from the design basis ground motion.
2. Revised shear strength used in the sliding stability analyses of the Canister Transfer Building mat supported on the in situ silty clay to be the strength measured in the direct shear tests performed on samples obtained from elevations approximately at the bottom of the 1-ft deep perimeter key. The shear strength used in this analysis equaled that measured for stresses corresponding to the vertical stresses at the bottom of the mat following completion of construction.
3. Removed static and dynamic bearing capacity analyses based on total-stress strengths.
4. The relative strength increase noted for the deeper lying soils in the cone penetration testing that was performed within the Canister Transfer Building footprint was used to determine a weighted average undrained strength of the soils in the entire upper layer for use in the bearing capacity analyses, since the soils within a depth equal to approximately the width of the foundation are effective in resisting bearing failures. This resulted in the average undrained strength for the bearing capacity analyses of the upper layer equal to 3.18 ksf.
5. Removed dynamic analyses based on increasing strengths of the cohesive soils that were measured in static tests to reflect well known phenomenon that the strength of cohesive soils increases as the rate of loading decreases.
6. Revised undrained shear strength of the clay block overlying the cohesionless layer to 2.2 ksf, based on the UU tests that were performed at confining pressures of 1.3 ksf (reported in Attachment 2 of Appendix 2A of the SAR) in the analysis of sliding of the Canister Transfer Building on deep plane of cohesionless soils.

7. Added shearing resistance available on the ends of the block of clay, since this soil must be sheared along these planes in order for the Canister Transfer Building to slide on a deep plane of cohesionless soils.
8. Revised method of calculating the inclination factor in the bearing capacity analyses to that presented by Vesic in Chapter 3 of Winterkorn and Fang (1975). Vesic's method expands upon the theory developed by Hansen for plane strain analyses of footings with inclined loads. 0Vesic's method permits a more rigorous analysis of inclined loads acting in two directions on rectangular footings, which more closely represents the conditions applicable for the Canister Transfer Building.
9. Replaced Tables 2, 2.6-9, and 2.6-10 with revised results for the changes in shear strength of the in situ soils noted above and deleted Table 3.

REVISION 4

1. Updated stability analyses to reflect revised design basis ground motions (a_H = 0.711g & a_V = 0.695g, per Table 1 of Geomatrix, 2001).
2. Resisting moment in overturning stability analysis calculated based on resultant of static and dynamic vertical forces.
3. Updated dimensions of foundation mat to 240 ft (E-W) x 279.5 ft (N-S), and changed the depth of the perimeter key to 1.5 ft, in accordance with design change identified in Figure 4.7-1 (3 sheets), "Canister Transfer Building," of SAR Revision 21 (based on S&W Drawings 0599602-EC-404A-B & 404B-B).
4. Added definition of "m" used in the inclination factors for calculating allowable bearing capacity.
5. Updated references to supporting calculations.
6. Updated discussions and conclusions to incorporate revised results.

REVISION 5

1. Shear strength of clayey soils beneath the building for resisting sliding was changed from 1.8 ksf to 1.7 ksf to reflect lower final effective stresses under the mat after changing size of mat to 240 ft x 279.5 ft.
2. Added sliding analysis that includes both shear resistance along bottom of the plane of the clayey soils enclosed within the perimeter key at the base of the mat and the full passive resistance from the soil cement placed adjacent to the mat. Used residual strength measured in the direct shear tests that were performed on these clayey soils for this case.

OBJECTIVE

To determine the stability against overturning, sliding, and static and dynamic bearing capacity failure of the Canister Transfer Building supported on a mat foundation.

ASSUMPTIONS/DATA

The footprint of the Canister Transfer Building foundation mat is shown on SAR Figure 4.7-1, "Canister Transfer Building," and S&W Drawing 0599602-EC-404A-B & 404B-B, Canister Transfer Building – Conc Mat Foundation Plan, Sheets 1 & 2. The elevation view of the structure is shown on Sheets 2 & 3 of SAR Figure 4.7-1. The foundation mat is 240 ft (E-W) x 279.5 ft (N-S) x 5 ft thick, with a 6.5-ft wide x 1.5–ft deep foundation key along the perimeter of the mat.

Figure 1 presents a schematic view of the foundation and identifies the coordinate system used in these analyses. Figure 2 presents the stick model used in the structural analysis of the Canister Transfer Building.

The various static and dynamic loads and load combinations used in these analyses were obtained from Calculation 05996.02-SC-5-2 (S&W, 2001). All loads are transferred to the bottom of the mat. Moments, when transferred to the bottom of the mat, result in eccentricity of the applied load with respect to the center of gravity of the mat. Lateral loads, when combined with the vertical load, result in inclination of the vertical load, which decreases the allowable bearing capacity.

The generalized soil profile at the site is shown on Figure 3. The soil profile consists of ~30 ft of silty clay/clayey silt with sandy silt/silty sand layers (Layer 1), overlying ~30 ft of very dense fine sand (Layer 2), overlying extremely dense silt (N ≥100 blows/ft, Layer 3). SAR Figures 2.6-21 through 23 present foundation profiles showing the relationship of the Canister Transfer Building with respect to the underlying soils. These profiles, located as shown in SAR Figure 2.6-18, provide more detailed stratigraphic information, especially within the upper ~30-ft thick layer at the site.

The bearing capacity analyses assume that Layer 1, which consists of silty clay/clayey silt with some sandy silt/silty sand, is of infinite thickness and has strength properties based on those measured for the clayey soils within the upper layer. These assumptions simplify the analyses and they are very conservative. The strength of the sandy silt/silty sand in the upper layer is greater than that of the clayey soils, based on the increases in Standard Penetration Test (SPT) blow counts (N-values) and the increased tip resistance (see SAR Figure 2.6-5, Sheet 1) in the cone penetration testing (ConeTec, 1999) measured for these soils. The underlying soils are even stronger, based on their SPT N-values, which generally exceed 100 blows/ft.

GEOTECHNICAL PROPERTIES

Based on laboratory test results presented in Table 3 of Calculation 05996.02-G(B)-5-2 (SWEC, 2000a), γ_{moist} = 80 pcf above the bottom of the mat and 90 pcf below the mat.

Table 6 of Calc 05996.02-G(B)-05-2 (copy included in Attachment A) summarizes the results of the triaxial tests that were performed within depths of ~10 ft. The undrained shear strengths (s_u) measured in these tests are plotted vs confining pressure in Figure 6. This figure is annotated to indicate the vertical stresses existing prior to construction and following completion of construction.

The undrained shear strengths measured in the triaxial tests are used for the dynamic bearing capacity analyses because the partially saturated, fine-grained soils will not drain completely during the rapid cycling of loadings associated with the design basis ground motion. As indicated in Figure 6, the undrained strength of the soils within ~10 ft of grade is assumed to be 2.2 ksf. This value is the lowest strength measured in the UU tests, which were performed at confining stresses of 1.3 ksf. This confining stress corresponds to the in situ vertical stress existing near the middle of the upper layer, prior to construction of these structures. It is much less than the final stresses that will exist under the cask storage pads and the Canister Transfer Building following completion of construction. Figure 6 illustrates that the undrained strength of these soils increase as the loadings of the structures are applied; therefore, 2.2 ksf is a very conservative value for use in the bearing capacity analyses of these structures.

The bearing capacity of the structures are dependant primarily on the strength of the soils in the upper ~25 to ~30-ft layer at the site. All of the borings drilled at the site indicate that the soils underlying this upper layer are very dense fine sands overlying silts with standard penetration test blow counts that exceed 100 blows/ft. The results of the cone penetration testing, presented in ConeTec(1999) and plotted in SAR Figure 2.6-5, Sheets 1 to 14, illustrate that the strength of the soils in the upper layer are much greater at depths below ~10 ft than in the range of ~5 ft to ~10 ft, where most of the triaxial test specimens were obtained.

In determining the bearing capacity of the foundation, the average shear strength of the soils along the anticipated bearing capacity failure slip surface should be used. This slip surface is normally confined to the zone within a depth below the footing equal to the minimum width of the footing. For the Canister Transfer Building, the effective width of the footing is decreased because of the large eccentricity of the load on the mat due to the seismic loading. As indicated in Table 2.6-10, the minimum effective width of the Canister Transfer Building occurs for Load Case IIIA, where B' = 119.5 ft. This is greater than the depth of the upper layer (~30 ft). Therefore, it is conservative to use the average strength of the soils in the upper layer in the bearing capacity analyses, since all of the soils in the upper layer will be effective in resisting failure along the anticipated bearing capacity slip surface.

The undrained strength used in the bearing capacity analyses presented herein is a weighted average strength that is applicable for the soils in the upper layer. This value is determined using the value of undrained shear strength of 2.2 ksf noted above for the soils tested at depths of ~10 ft and the relative strength increase measured for the soils below depths of ~12 ft in the cone penetration tests that were performed within the Canister Transfer Building footprint. As indicated on SAR Figure 2.6-18, these included CPT-37 and CPT-38. Similar increases in undrained strength for the deeper lying soils were also noted in all of the other CPTs performed in the pad emplacement area.

Attachment B presents copies of the plots of s_u vs depth for CPT-37 and CPT-38, which are included in Appendix D of ConeTec(1999). These plots are annotated to identify the average undrained strength of the cohesive soils measured with respect to depth. As shown by the plot of s_u for CPT-37, the weakest zone exists between depths of ~5 ft and ~12 ft. The results for CPT-38 are similar, but the bottom of the weakest zone is at a depth of ~11 ft. The underlying soils are all much stronger. The average value of s_u of the cohesive soils for the depth range from ~18 ft to ~28 ft is ~2.20 tsf, compared to s_u ~1.34 tsf for the zone between ~5 ft and ~12 ft. Therefore, the undrained strength of the deeper soils in the upper layer was ~64% (Δs_u = 100% x [(2.20 tsf – 1.34 tsf) / 1.34 tsf] higher than the strength measured for the soils within the depth range of ~5 ft to ~12 ft. The relative strength increase was even greater than this in CPT-38.

Using 2.2 ksf, as measured in the UU triaxial tests performed on specimens obtained from depths of ~10 ft, as the undrained strength applicable for the weakest soils (i.e., those in the depth range of ~5 ft to ~12 ft), the average strength for the soils in the entire upper layer is calculated as shown in Figure 4. The resulting average value, weighted as a function of the depth, is s_u ~3.18 ksf. This value would be much higher if the results from CPT-38 were used; therefore, this is considered to be a reasonable lower-bound value of the average strength applicable for the soils in the upper layer that underlie the Canister Transfer Building.

Further evidence that this is a conservative value of s_u for the soils in the upper layer is presented in Figure 6. This plot of s_u vs confining pressure illustrates that this value is slightly less than the average value of s_u measured in the CU triaxial tests that were performed on specimens obtained from depths of ~10 ft at confining stresses of 2.1 ksf. As indicated in this figure, the confining stress of 2.1 ksf used to test these specimens is comparable to the vertical stress that will exist ~7 ft [(2.1 ksf – 1.46 ksf) ÷ 0.09 kcf] below the Canister Transfer Building mat following completion of construction. Since these tests were performed on specimens of the weakest soils underlying the Canister Transfer Building mat (the deeper lying soils are stronger based on the SPT and the cone penetration test data), it is conservative to use the weighted average value of s_u of 3.18 ksf for the soils in the entire upper layer of the profile in the bearing capacity analyses.

Direct shear tests were performed on undisturbed specimens of the silty clay/clayey silt obtained from Borings CTB-6 and CTB-S, which were drilled in the locations shown in SAR Figure 2.6-18. These specimens were obtained from Elevation ~4469, approximately the elevation of the bottom of the perimeter key proposed at the base of Canister Transfer

Building mat. Note, this key is being constructed around the perimeter of the mat to ensure that the full shear strength of the clayey soils is available to resist sliding of the structure due to loads from the design basis ground motion. These direct shear tests were performed at normal stresses that ranged from 0.25 ksf to 3.0 ksf. This range of normal stresses bounds the ranges of stresses expected for static and dynamic loadings from the design basis ground motion.

The results of these tests are presented in Attachments 7 and 8 of the Appendix 2A of the SAR and they are plotted in Figures 7 and 8. Because of the fine grained nature of these soils, they will not drain completely during the rapid cycling of loadings associated with the design basis ground motion. Therefore, sliding stability analyses included below of the Canister Transfer Building constructed directly on the silty clay are performed using the average shear strength measured in these direct shear tests for a normal stress equal to the vertical stress under the building following completion of construction, but prior to imposition of the dynamic loading due to the earthquake. As shown in Figures 7 and 8, this average shear strength is 1.7 ksf and the friction angle is set equal to 0°.

Effective-stress strength parameters are estimated to be $\phi = 30°$ and $c = 0$ ksf, even though these soils may be somewhat cemented. This value of ϕ is based on the PI values for these soils, which ranged between 5% and 23% (SWEC, 2000a), and the relationship between ϕ and PI presented in Figure 18.1 of Terzaghi & Peck (1967).

Therefore, static bearing capacity analyses are performed using the following soil strengths:

Case IA Static using undrained strength parameters: $\phi = 0°$ & $c = 3.18$ ksf.

Case IB Static using effective-stress strength parameters: $\phi = 30°$ & $c = 0$.

and dynamic bearing capacity analyses are performed using $\phi = 0°$ & $c = 3.18$ ksf.

Soil Cement Properties:

The unit weight of the soil cement is assumed to be 100 pcf in the analyses included herein and the unconfined compressive strength is 250 psi.

METHOD OF ANALYSIS

Load cases analyzed consist of combinations of vertical static, vertical dynamic (compression and uplift, Y-direction), and horizontal dynamic (in X and Z-directions) loads.

The following load combinations are analyzed:

Case I Static

Case II Static + dynamic horizontal forces due to the earthquake

Case III Static + dynamic horizontal + vertical uplift forces due to the earthquake

Case IV Static + dynamic horizontal + vertical compression forces due to the earthquake

For Case II, 100% of the dynamic lateral forces in both X and Z directions are combined. For Cases III and IV, 100% of the dynamic loading in one direction is assumed to act at the same time that 40% of the dynamic loading acts in the other two directions. For these cases, the suffix "A" is used to designate 40% in the X direction (N-S for the Canister Transfer Building, as shown in Figure 1), 100% in the Y direction (vertical), and 40% in the Z direction (E-W). Similarly, the suffix "B" is used to designate 40% in the X direction, 40% in the Y, and 100% in the Z, and the suffix "C" is used to designate 100% in the X direction and 40% in the other two directions. Thus,

Case IIIA	40%	N-S direction,	-100%	Vertical direction,	40%	E-W direction.
Case IIIB	40%	N-S direction,	-40%	Vertical direction,	100%	E-W direction.
Case IIIC	100%	N-S direction,	-40%	Vertical direction,	40%	E-W direction.

The negative sign for the vertical direction in Case III indicates uplift forces due to the earthquake. Case IV is the same as Case III, but the vertical forces due to the earthquake act downward in compression; therefore, the signs on the vertical components are positive.

Combining the effects of the three components of the design basis ground motion in this manner is in accordance with ASCE-4 (1986).

ANALYSIS OF OVERTURNING STABILITY

The factor of safety against overturning is defined as:

$$FS_{OT} = \Sigma M_{Resisting} \div \Sigma M_{Driving}$$

The overturning stability of the Canister Transfer Building is determined using the dynamic loads for the building due to the PSHA 2,000-yr return period earthquake. These loads are listed in Table 2.6-11, and they were developed based on the dynamic analysis performed in Calculation 05996.02-SC-5 (S&W, 2001) and described in SAR Section 4.7.1.5.3. The masses and accelerations of the joints (see Figure 2 for locations of the joints) used in the model of the Canister Transfer Building in Calculation 05996.02-SC-5 are listed on the left side of Table 2.6-11, and the resulting inertial forces and associated moments are listed on the right. Based on building geometry shown schematically in Figure 1 and the forces and moments shown in Table 2.6-11, overturning is more critical about the N-S axis (279.5 ft) than about the E-W axis (240 ft). Page 37 of Calculation 05996.02-SC-5 indicates that the moment due to angular (rotational) acceleration of the structure is 465,729 ft-K about the N-S axis and 1,004,332 ft-K about the E-W axis.

The vertical force due to the earthquake can act upward or downward. However, when it acts downward, it acts in the same direction as the weight, tending to stabilize the structure with respect to overturning stability. The minimum factor of safety against overturning will occur when the maximum dynamic vertical force acts in the upward direction, tending to unload the mat and reduce the resisting moment. Therefore, calculate the factor of safety for Case III.

CHECKING OVERTURNING ABOUT THE N-S AXIS

For Case IIIA, where 40% of the horizontal force due to the earthquake act in the N-S and E-W directions and 100% acts vertically upward, the resisting moment is calculated as the net effective weight of the building x the distance from one edge of the mat to the center of the mat. The net effective weight of the building is 97,749 – 79,779 K, (i.e., Weight – Total $F_{V\ Dyn}$), as shown in Table 2.6-11. For overturning about the N-S axis, the moment arm for the resisting moment equals ½ of 240 ft, or 120 ft. Therefore,

$$\Sigma M_{Resisting} = (97{,}749 - 79{,}779)\ K \times 120\ ft = 2{,}156{,}400\ ft\text{-}K.$$

This ignores the eccentricities of the vertical masses with respect to the center of the mat. Incorporating these eccentricities, which are included in Attachment A of Calc 05996.02-SC-5, Rev. 2, the resulting resisting moment is calculated as follows:

JOINT	EL.	MASS Y k-sec²/ft	AY g's	Z (E-W) ft	Moment Arm E-W ft	$SM_{@N-S}$ ft-K
0	94.25	260.1	0.783	0	120.00	218,002
1	95	1,908.0	0.783	-0.73	119.27	1,589,353
2	130	420.4	0.821	-2.02	117.98	285,292
3	170	304.3	0.913	-3.14	116.86	99,412
4	190	117.1	0.928	0	120.00	32,638
5	190	27.6	1.840	0	120.00	-89,478
6	170	1.0	0	0	120.00	3,860
					Total =	**2,139,080**

The driving moments include 40% of the ΣM acting about the N-S axis, $\Sigma M_{@X}$ in Table 2.6-11, which is 0.4 x 2,706,961.4 = 1,082,785 ft-K, and 40% of the moment about the N-S axis due to angular (rotational) acceleration of the structure, which is 0.4 x 465,729 = 186,292 ft-K.

The square root of the sum of the squares (SRSS) is used to combine the moments to account for the fact that the maximum responses of earthquake do not act in all three orthogonal directions and angular rotations at the same time. The moments acting about the E-W axis do not contribute to overturning about the N-S axis; therefore,

$$\sum M_{Driving} = \sqrt{1{,}082{,}785^2 + (186{,}292)^2} = 1{,}098{,}694 \quad \text{ft} - \text{K}$$

and **FS_{OT}** = 2,156,400 ÷ 1,098,694 = **1.96**

about the N-S axis for Case IIIA without including eccentricities of vertical masses.

Including the effect of the eccentricities of the vertical masses, the resulting factor of safety against overturning is:

FS_{OT} = 2,139,080 ÷ 1,098,694 = **1.95** **(Minimum)**

For Case IIIB, where 100% of the horizontal force due to the earthquake acts in the E-W direction and 40% acts in the N-S direction and vertically upward, the resisting moment is calculated as the net effective weight of the building x the distance from one edge of the mat to the center of the mat. The net effective weight of the building is 97,749 – 40% of 79,779 K, (i.e., Weight – Total $F_{V\ Dyn}$), as shown in Table 2.6-11. For overturning about the N-S axis, the moment arm for the resisting moment equals ½ of 240 ft, or 120 ft. Therefore,

$\Sigma M_{Resisting}$ = (97,749 – 0.4 x 79,779) K x 120 ft = 7,900,488 ft-K.

The driving moments include 100% of the ΣM acting about the N-S axis, $\Sigma M_{@X}$ in Table 2.6-11, which is 2,706,961.4 ft-K, and 100% of the moment about the N-S axis due to angular (rotational) acceleration of the structure, which is 465,729 ft-K.

The square root of the sum of the squares (SRSS) is used to combine the moments to account for the fact that the maximum responses of earthquake do not act in all three orthogonal directions and angular rotations at the same time. The moments acting about the E-W axis do not contribute to overturning about the N-S axis; therefore,

$$\sum M_{Driving} = \sqrt{2{,}706{,}961.4^2 + 465{,}729^2} = 2{,}746{,}733 \quad \text{ft} - \text{K}$$

and FS_{OT} = 7,900,488 ÷ 2,746,733 = **2.88** about the N-S axis for Case IIIB.

Case IIIC, where 100% of the horizontal force due to the earthquake acts in the N-S direction and 40% acts in the E-W direction and vertically upward, **is less critical** for overturning about the N-S axis than Case IIIB.

CHECKING OVERTURNING ABOUT THE E-W AXIS

For Case IIIA, where 40% of the horizontal force due to the earthquake act in the N-S and E-W directions and 100% acts vertically upward, the resisting moment is calculated as the net effective weight of the building x the distance from one edge of the mat to the center of the mat. The net effective weight of the building is 97,749 – 79,779 K, (i.e., Weight – Total $F_{V\ Dyn}$), as shown in Table 2.6-11. For overturning about the E-W axis, the moment arm for the resisting moment equals ½ of 279.5 ft, or 139.75 ft. Therefore,

$\Sigma M_{Resisting}$ = (97,749 – 79,779) K x 139.75 ft = 2,511,308 ft-K.

This ignores the eccentricities of the vertical masses with respect to the center of the mat. Incorporating these eccentricities, the resulting resisting moment is calculated as follows:

JOINT	EL.	MASS Y k-sec²/ft	AY g's	Moment Arm N-S ft	$SM_{@E-W}$ ft-K
0	94.25	260.1	0.783	139.75	253,882
1	95	1,908.0	0.783	138.08	1,840,009
2	130	420.4	0.821	131.46	317,889
3	170	304.3	0.913	143.18	121,802
4	190	117.1	0.928	139.75	38,010
5	190	27.6	1.840	139.75	-104,205
6	170	1.0	0	139.75	4,496
				Total =	**2,471,883**

The driving moments include 40% of the ΣM acting about the E-W axis, $\Sigma M_{@Z}$ in Table 2.6-11, which is 0.4 x 2,849,703 = 1,139,881 ft-K, and 40% of the moment about the E-W axis due to angular (rotational) acceleration of the structure, which is 0.4 x 1,004,322 = 401,729 ft-K.

The square root of the sum of the squares (SRSS) is used to combine the moments to account for the fact that the maximum responses of earthquake do not act in all three orthogonal directions and angular rotations at the same time. The moments acting about the N-S axis do not contribute to overturning about the E-W axis; therefore,

$$\sum M_{Driving} = \sqrt{1{,}139{,}881^2 + 401{,}729^2} = 1{,}208{,}601 \quad ft-K$$

and FS_{OT} = 2,511,308 ÷ 1,208,601 = **2.07**

about the E-W axis for Case IIIA without including eccentricities of vertical masses.

Including the effect of the eccentricities of the vertical masses, the resulting factor of safety against overturning is:

FS_{OT} = **2,471,883** ÷ 1,208,601 = **2.05 (Minimum @ E-W Axis)**

For Case IIIC, where 100% of the horizontal force due to the earthquake acts in the N-S direction and 40% acts in the E-W direction and vertically upward, the resisting moment is calculated as the net effective weight of the building x the distance from one edge of the mat to the center of the mat. The net effective weight of the building is 97,749 – 40% of 79,779 K, (i.e., Weight – Total $F_{V\ Dyn}$), as shown in Table 2.6-11. For overturning about the E-W axis, the moment arm for the resisting moment equals ½ of 279.5 ft, or 139.75 ft. Therefore,

$\Sigma M_{Resisting}$ = (97,749 – 0.4 x 79,779) K x 139.75 ft = 9,200,777 ft-K.

The driving moments include 100% of the ΣM acting about the E-W axis, $\Sigma M_{@Z}$ in Table 2.6-11, which is 2,849,703.4 ft-K, and 100% of the moment about the E-W axis due to angular (rotational) acceleration of the structure, which is 1,004,322 ft-K.

The square root of the sum of the squares (SRSS) is used to combine the moments to account for the fact that the maximum responses of earthquake do not act in all three orthogonal directions and angular rotations at the same time. The moments acting about the N-S axis do not contribute to overturning about the E-W axis; therefore,

$$\sum M_{Driving} = \sqrt{2{,}849{,}703^2 + 1{,}004{,}322^2} = 3{,}021{,}501 \quad ft-K$$

and FS_{OT} = 9,200,777 ÷ 3,021,501 = **3.05** about the E-W axis for Case IIIC.

Case IIIB is less critical for overturning about the N-S axis than Case IIIC.

ANALYSIS OF SLIDING STABILITY

The factor of safety (FS) against sliding is defined as follows:

$$FS = \text{Resisting Force} \div \text{Driving Force} = T \div V$$

For this analysis, ignoring passive resistance of the soil adjacent to the mat, the resisting, or tangential shear force, T, below the base of the pad is defined as follows:

$$T = N \tan \phi + c\,B\,L$$

where, N (normal force) $= \sum F_v = F_{v\,Static} + F_{v\,Eqk}$

$\phi = 0°$ (for Silty Clay/Clayey Silt)

$c = 1.7$ ksf, as discussed above under "Geotechnical Properties."

$B = 240$ feet

$L = 279.5$ feet

The driving force, V, is calculated as follows:

$$V = \sqrt{F_{HN-S}^2 + F_{HE-W}^2}$$

SLIDING STABILITY OF THE CANISTER TRANSFER BUILDING ON IN SITU CLAYEY SOILS

Based on Half of the Passive Resistance of the Soil Cement and the Peak Strength of the Clayey Soils Under the Building

The sliding stability of the CTB was evaluated using the foundation loadings developed in the soil-structure interaction analyses (Calculation 05996.02-SC-5, S&W, 2001). In this case, the strength of the clayey soils at the bottom of the 1.5-ft deep key around the CTB mat was based on the average of the two sets of direct shear tests performed on samples of soils obtained from beneath the CTB, approximately at the elevation proposed for founding the structure. The results of these tests are included in Attachments 7 and 8 of Appendix 2A of the SAR, and Figures 7 and 8 present plots of peak shear stress vs normal stress measured in these tests. As discussed above under Geotechnical Properties, $\phi = 0°$ and a shear strength of 1.7 ksf were used for the clayey soils underlying the Canister Transfer Building in determining resisting forces for the earthquake loading combinations.

The unconfined compressive strength of the soil cement adjacent to the Canister Transfer Building will be at least 250 psi. These analyses assume that the peak shear strength of the clayey soils under the Canister Transfer Building are available to resist sliding along with up to half of the passive resistance of the soil cement.

The backfill to be placed around the Canister Transfer Building mat and 1.5-ft deep key will be soil cement, constructed from the eolian silt and silty clay that was excavated from the area. For soil cement constructed using these soils, it is reasonable to assume the lower bound value of γ is 100 pcf, $\phi = 0°$ & $c = 125$ psi.

For the soil cement, $P_p = 2c \times D_f \times (B \text{ or } L)$

For 5' of soil cement, using a factor of safety of 2 applied to the passive resistance,

$$P_p = \frac{2 \times c \times D_f \times w}{FS} = \frac{2 \times 125 \frac{\#}{in.^2} \times \frac{144 \cdot in.^2}{ft^2} \times \frac{K}{1{,}000\#} \times 5\,ft \times 1 \frac{ft}{LF}}{2} = 90 \frac{K}{LF}$$

The CTB mat is 240' wide in the E-W direction and 279.5' long in the N-S direction; therefore, the total passive force available to resist sliding is at least 240' x 90 K/LF = 21,600 K acting in the N-S direction in the analyses that use the peak strength of the clayey soils under the building.

Lambe & Whitman (1969, p 165) indicates that little horizontal compression, ~0.5%, is required to reach half of full passive resistance for dense sands. The soil cement will be compacted to a dense state; therefore, assume that half of the total passive resistance is available to resist sliding of the building. Note, 0.5% of the 5 ft height of the mat + 1.5-ft deep key = 0.005 x 6.5 ft x 12 in./ft = 0.39 in. Since there are no safety-related systems that would be severed or otherwise impacted by movements of this small magnitude, it is reasonable to use this passive thrust to resist sliding along with the resistance provided by the peak shear strength of the clayey soils enclosed within the perimeter key at the base of the mat.

The results of the sliding stability analysis of the Canister Transfer Building for this case are presented in Table 2.6-13. In this table, the components of the driving and resisting forces are combined using the SRSS rule. All of these factors of safety are greater than 1.1, the minimum required value. These results indicate that the factors of safety are acceptable for all load combinations examined. The lowest factor of safety is 1.15, which applies for Cases IIIC and IVC, where 100% of the dynamic earthquake forces act in the N-S direction and 40% act in the other two directions.

These results are conservative, because they assume that only one-half of the passive pressures are available to resist sliding and no credit is taken for the fact that the strength of cohesive soils increases as the rate of loading increases. Note, Newmark and Rosenblueth (1973) indicate:

> *"In all cohesive soils reported to date, strength and stiffness increase markedly with strain rate (Figs. 13.6 and 13.7). An increase of the order of 40 percent is common for the usual strain rates of earthquakes, above the strength and stiffness of static tests."*

Schimming et al, (1966), Casagrande and Shannon (1948, and Das (1993) all report similar increases in strength of cohesive soils due to rapid loading. Therefore, since these results are based on static shear strengths, they represent conservative lower-bound values of the factor of safety against sliding of the Canister Transfer Building founded on in situ silty clay/clayey silt with soil-cement backfill around the mat.

Based on the Full Passive Resistance of the Soil Cement and the Residual Strength of the Clayey Soils Under the Building

Before a complete sliding failure can occur, the full passive resistance of the soil cement must be engaged. Because the strains associated with reaching the full passive state typically are large for soils, in the analyses where the full passive resistance of the soil cement adjacent to the mat is used, the shear strength of the clayey soils under the building is reduced to a conservative estimate of the residual shear strength, based on the results of the direct shear tests.

The results of the direct shear tests, presented as plots of shear stress vs horizontal displacement in Attachment 7 of Appendix 2A of the SAR (annotated copies are included in Attachment C of this calculation), illustrate that the residual strength of these soils is nearly equal to the peak strength for those specimens that were tested at confining stresses of 2 ksf. For example, for Sample U-1C from Boring C-2, at horizontal displacements of ~0.025" past the peak strength, there is ~1.5% reduction in the shear strength indicated. Note, the horizontal displacement of ~0.025" past the peak strength corresponds to a horizontal strain of ~1%, since the diameter of these specimens was 2.5". The results for Sample U-1AA from Boring CTB-S showed no decrease in shear strength following the peak at ~0.025" horizontal displacement, and Samples U-3B&C from Boring CTB-6 showed a decrease of ~5%. The specimens that were tested at confining stresses of 1 ksf all show reductions of ~20% at horizontal displacements of ~0.025" past the peak.

The final effective vertical stresses at the base of the Canister Transfer Building, σ'_v, are ~1.5 ksf, now that the mat has been changed to 240 ft x 279.5 ft. This value is approximately half-way between the confining stresses of 1 and 2 ksf used for several of the direct shear tests. The residual strength of the clayey soils beneath the building are expected to show reductions from the peak strength of ~12.5%, since the final effective stresses under the building are ~1.5 ksf. Therefore, based of these results, conservatively assume that the peak strength of the clayey soils beneath the soil cement layer underlying the pads is reduced by 20% to reach residual strength, to account for horizontal straining required to reach a strain applicable to the full passive resistance of the soil cement adjacent to the pad.

The results of the sliding stability analysis of the Canister Transfer Building for this case are presented in Table 2.6-14. In this table, the components of the driving and resisting forces are combined using the SRSS rule. All of these factors of safety are greater than 1.1, the minimum required value. These results indicate that the factors of safety are acceptable for all load combinations examined. The lowest factor of safety is 1.26, which applies for Cases IIIC and IVC, where 100% of the dynamic earthquake forces act in the N-S direction and 40% act in the other two directions. These results demonstrate that there is additional margin available to resist sliding of the building due to the earthquake loads, even when very conservative estimates of the residual shear strength of the clayey soils are used.

Sliding Stability of the Canister Transfer Building on Cohesionless Soils

The Canister Transfer Building will be founded on clayey soils that have an adequate amount of cohesive strength to resist sliding due to the dynamic forces from the design basis ground motion. As shown in SAR Figures 2.6-21 through 2.6-23, however, some of the soils underlying the building are cohesionless within the depth zone of about 10 to 20 ft, especially near the southern portion of the building. Analyses presented on the next six pages address the possibility that sliding may occur along a deeper slip plane at the clayey soil/sandy soil interface as a result of the earthquake forces.

The resistance to sliding is greatly reduced for frictional materials when the dynamic forces due to the earthquake act upward. The normal forces act downward for Case IV loadings and, hence, the resisting forces will be much greater than those for Case III. Therefore, these analyses are performed only for Load Cases IIIA, IIIB, and IIIC. As described above, these load cases are defined as follows:

Case IIIA	40%	N-S direction,	-100%	Vertical direction,	40%	E-W direction.
Case IIIB	40%	N-S direction,	-40%	Vertical direction,	100%	E-W direction.
Case IIIC	100%	N-S direction,	-40%	Vertical direction,	40%	E-W direction.

As shown in SAR Figures 2.6-21 through 2.6-23, the top of the cohesionless layer varies from about 5 ft to about 9 ft below the mat, and it generally is at a depth of about 6 ft below the mat. These analyses include the passive resistance acting on a plane extending from grade down to the top of the cohesionless layer, plus the shear strength available at the ends of the silty clay block under the mat, plus the frictional resistance available along the top of the cohesionless layer. The weight of the clayey soils existing between the top of the cohesionless soils and the bottom of the mat is included in the normal force used to calculate the frictional resistance acting along the top of the cohesionless layer.

A review of the cone penetration test results (ConeTec, 1999) obtained within the top 2 ft of the layer of nonplastic silt/silty sand/sandy silt underlying the Canister Transfer Building indicated that $\phi = 38°$ is a reasonable minimum value for these soils. This review is presented on the next page.

The next five pages illustrate that the factor of safety against sliding along the top of this layer is >1.1 for all load cases (i.e., Load Cases IIIA, IIIB, and IIIC). These analyses include several conservative assumptions. They are based on static strengths of the silty clay block under the Canister Transfer Building mat, even though, as reported in Das (1993), experimental results indicate that the strength of cohesive soils increases as the rate of loading increases. For rates of strain applicable for the cyclic loading due to the design basis ground motion, Das indicates that for most practical cases, one can assume that $c_{u\ dynamic} \sim 1.5 \times c_{u\ static}$. In addition, the silty sand/sandy silt layer is not continuous under the Canister Transfer Building mat, and this analysis neglects cementation of these soils that was observed in the samples obtained in the borings. Therefore, sliding is not expected to occur along the surface of the cohesionless soils underlying the Canister Transfer Building.

NOTED JAN 2 1 2000 P. J. Trudeau

▲5010.65

1 CALCULATION IDENTIFICATION NUMBER				PAGE 19
J.O. OR W.O. NO. 05996.02	DIVISION & GROUP G(B)	CALCULATION NO. 13-5	OPTIONAL TASK CODE	

SLIDING ON DEEP PLANE AT TOP OF SILTY SAND/ SANDY SILT LAYER

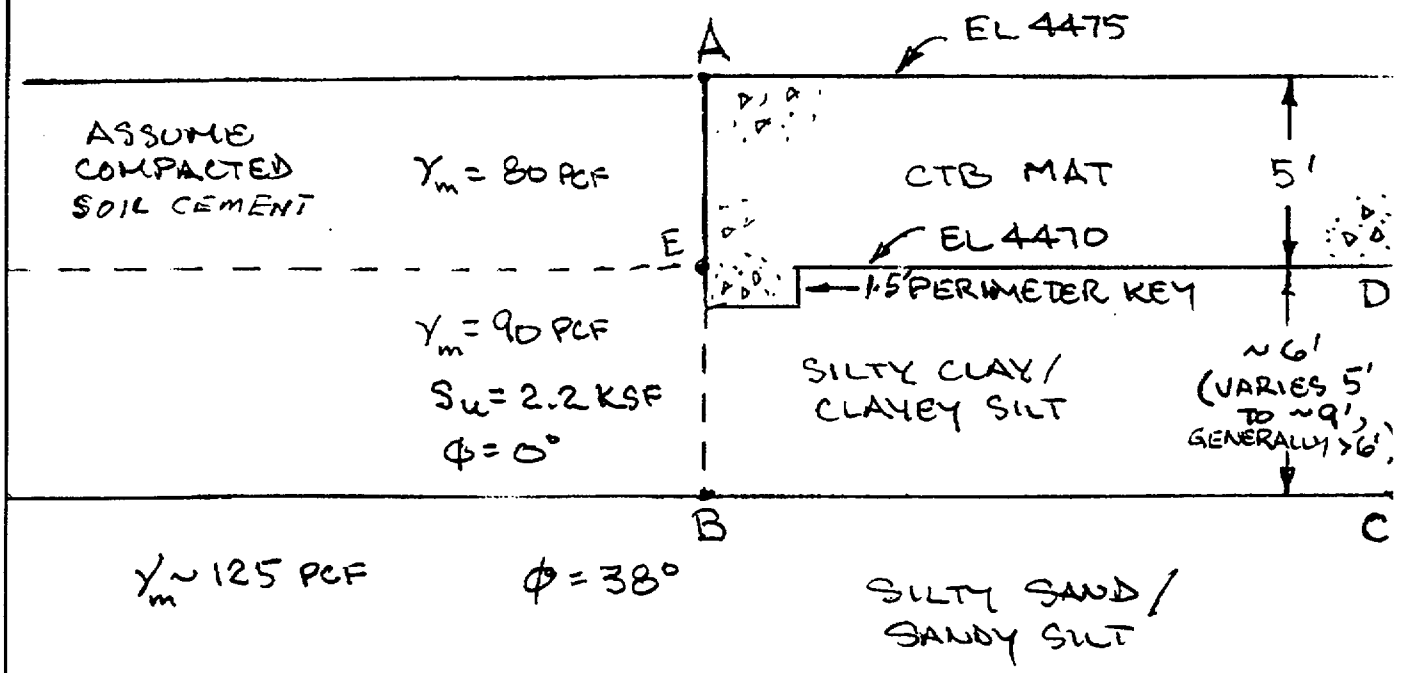

NOTE: VALUE OF ϕ BASED ON ϕ DATA FROM CPT-37 & 38. PRESENTED IN CONETEC (1999)

ID	~DEPTH OF SILTY SAND	MIN ϕ	MAX ϕ	AVG ϕ	MEDIAN ϕ	ϕ IN TOP 2'
CPT-37	~11.6' TO ~18.7'	36*	44	40	40	~38
CPT-38	~11' TO ~18'	38	46	43	44	~38

PASSIVE PRESSURES ACTING ON PLANE AB WILL INCREASE AS B GETS DEEPER IN THE SILTY SAND/SANDY SILT LAYER; ∴ USE ϕ NEAR THE TOP OF THE LAYER. ⇒ ϕ = 38°.

N VALUES ARE HIGH, GENERALLY ≫ 20 BL/FT; ∴ ϕ = 38° IS REASONABLE

* EXCLUDING SINGLE VALUE OF ϕ = 34° AT z = 13.8'

SLIDING ON DEEP COHESIONLESS PLANE

$$FS_{SLIDING} = \frac{\Sigma \text{ RESISTING FORCES}}{\Sigma \text{ DRIVING FORCES}}$$

RESISTING FORCES INCLUDE: PASSIVE RESISTANCE AVAILABLE ALONG AB + SHEAR RESISTANCE ALONG ENDS OF BLOCK BCDE + FRICTION ALONG BC.

(1) PASSIVE RESISTANCE AVAILABLE ALONG AB INCLUDES $(2 \times 5 \times 125 \times .144 \frac{K}{FT^2}) \times (5')$ = 180 K/LF FOR COMPACTED 5' SOIL-CEMENT ADJACENT TO 5' MAT

$+ \frac{1}{2} \gamma H^2 K_p + q_s H K_p + 2cH\sqrt{K_p}$ FOR 5' BLOCK OF SILTY CLAY UNDERLYING THE COMPACTED SOIL-CEMENT

$$\frac{1}{2}\left(0.090 \frac{K}{FT^3}\right) \times (5\,FT)^2 \times \overset{K_p}{1.0} + \overset{H}{6\,FT} \times \overset{\gamma}{0.080 \frac{K}{FT^3}} \times 5\,FT \times \overset{K_p}{1.0}$$

$$+ 2 \times \overset{c}{2.2 \frac{K}{FT^2}} \times 5\,FT \times \sqrt{1.0} = 1.125 + 2.40 + 22.0 = 25.52 \frac{K}{FT}$$

∴ TOTAL PASSIVE RESISTANCE AVAILABLE ALONG AB

= 180 + 25.52 = 205.52 K/LF

(2) ESTIMATE ADDITIONAL RESISTANCE TO SLIDING AVAILABLE AT THE ENDS OF THE BLOCK OF SILTY CLAY THAT MUST SHEARED BEFORE THE CTB CAN SLIDE. INCLUDE ONLY THE PORTION BELOW THE CTB MAT; i.e., BCDE SHOWN ON PAGE 19.

$S_u = 2.2$ KSF, = MINIMUM S_u MEASURED IN UU TRIAXIAL TESTS AT $\sigma_c = 1.3$ KSF

AREA BCDE = 6 FT × 240 FT_{E-W} = 1440 $\frac{FT^2}{END}$

$\therefore \Delta T_{ENDS_{E-W}} = 2 \text{ ENDS} \times 1440 \frac{FT^2}{END} \times 2.2 \frac{K}{FT^2} = 6{,}336 \text{ K}_{E-W}$

$\Delta T_{END_{N-S}} = 2 \text{ ENDS} \times 6' \times \underset{L_{N-S}}{279.5'} \times 2.2 \frac{K}{FT^2} = 7{,}379 \text{ K}_{N-S}$

(3) FRICTIONAL RESISTANCE ALONG PLANE BC:

ADD WEIGHT OF SILTY CLAY BLOCK BETWEEN BOTTOM OF MAT & TOP OF SILTY SAND / SANDY SILT TO THE NORMAL FORCE AT BOTTOM OF THE MAT.

$\Delta N_{CLAY} = \overset{\Delta H}{6'} \times \overset{\gamma}{0.090 \frac{K}{FT^3}} \times \overset{B}{240'} \times \overset{L}{279.5'} = 36{,}223 \text{ K}$

(4) SINCE THE MATERIAL FROM GROUND SURFACE TO THE TOP COHESIONLESS SILTY SAND/SANDY SILT ARE ALL COHESIVE (SOIL CEMENT, SILTY CLAY), THE ACTIVE EARTHQUAKE PRESSURE IS SMALL AND NEGLIBLE.

NOTE: FRICTIONAL RESISTANCE WILL BE LOWER WHEN VERT EARTHQUAKE FORCES ACT UPWARD. ∴ CHECK CASES III A, B & C

NOTED JAN 2 1 2000 P. J. Trudeau
▲5010.65

CALCULATION IDENTIFICATION NUMBER				
3				PAGE 22
J.O. OR W.O. NO.	DIVISION & GROUP	CALCULATION NO.	OPTIONAL TASK CODE	
05996.02	G(B)	13-5		

SLIDING ON DEEP PLANE

	N-S	VERT	E-W
CASE IIIA:	40% IN X	−100% IN Y	40% IN Z
FROM TABLE 1	0.4×111,108 K	−79,779 K	0.4 × 99,997 = 39,999 K
			L = V_{E-W}

$$\therefore N = \underset{\text{CTB DL}}{97{,}749} - \underset{F_{VD}\text{ or }E_{QV}}{79{,}779\,K} + \underset{\Delta N_{CLAY}}{36{,}223\,K} = 54{,}193\,K$$

$$N \tan\phi = 54{,}193\,K \tan 38^\circ = 42{,}340\,K$$

$$\therefore FS_{SLIDING_{N-S}} = \frac{205.52\,K/LF \times \overset{\ell_{E-W}}{240'} + 7{,}379\,K + 42{,}340\,K}{0.4 \times 111{,}108\,K} = 1.78$$

$$FS_{SLIDING_{E-W}} = \frac{205.52\,\frac{K}{LF} \times \overset{L}{279.5} + 6336\,K + 42{,}340\,K}{0.4 \times 99{,}997\,K} = 1.65 > 1.1 \quad \therefore OK$$

	N-S	VERT	E-W
CASE IIIB	40% IN X	−40% IN Y	100% IN Z
FROM TABLE 1	0.4×111,108 K	−0.4×79,779 K	99,997 K
			L = V_{E-W}

$$\therefore N = \underset{\text{CTB DL}}{97{,}749\,K} - \underset{F_{VD}}{0.4 \times 79{,}779\,K} + \underset{\Delta N_{CLAY}}{36{,}223\,K} = 102{,}060\,K$$

$$\Rightarrow T = \Big(\overset{P_P}{180\,\tfrac{K}{L.F.} + 25.52\,\tfrac{K}{LF.}}\Big) \times \overset{L_{N-S}}{279.5'} + 6{,}336\,K_{E-W}$$

$$+ \underset{79{,}738}{\overset{N}{102{,}060\,K}} \tan \overset{\phi}{38^\circ} = 143{,}517\,K$$

57,443

$$FS = \frac{\text{RESISTING}}{\text{DRIVING}} = \frac{143{,}517\,K}{99{,}997\,K} = 1.44 \quad > 1.1 \quad \therefore OK$$

SLIDING ON DEEP PLANE

	N-S	VERT	E-W
CASE III C	100% IN X	−40% IN Y	40% IN Z
FROM TABLE 1	111,108 K	−0.4 × 79,779 K	0.4 × 99,997

$$\therefore N = \overset{CTB\ LL}{97,749} - 0.4 \times \underset{31,912}{\overset{F_{VD}}{79,779\,K}} + \overset{\Delta N_{CLAY}}{36,223} = 102,060\ K$$

$$T_{N-S} = 205.52 \frac{K}{LF} \times \overset{B}{240'} + \overset{\Delta T_{N-S}}{7,379\,K} + 102,060 \tan 38^\circ = 136,442\ K$$

$$FS_{SLIDING} = \frac{T}{V_{N-S}} = \frac{136,442\ K}{111,108\ K} = 1.23 \quad > 1.1 \ \therefore \text{OK}$$

THE FACTOR OF SAFETY AGAINST SLIDING ON A DEEP PLANE OF COHESIONLESS SOIL IS > 1.1 FOR LOAD CASES III A, III B, & III C. THEREFORE THERE IS NO SLIDING ON A DEEP PLANE OF COHESIONLESS SOIL.

ALLOWABLE BEARING CAPACITY

Bearing capacity calculations are performed using the method for determining general bearing capacity failure, as presented in Winterkorn and Fang (1975). Local bearing capacity (punching shear) failure is ruled out due to the large size of the mat, 240' x 279.5'.

The general bearing capacity equation is a modification of Terzaghi's bearing capacity equation, which was developed for strip footings and which indicates that $q_{ult} = cN_c+qN_q+1/2\ \gamma BN_\gamma$. For this relationship, the ultimate bearing capacity of soil consists of three components: 1) cohesion, 2) surcharge, and 3) friction, which are represented by bearing capacity factors N_c, N_q, and N_γ. Terzaghi's bearing capacity equation has been enhanced by various investigators to incorporate shape, depth, and load inclination factors for different foundation geometries and loads as follows:

$$q_{ult} = c\ N_c\ s_c\ d_c\ i_c + q\ N_q\ s_q\ d_q\ i_q + \tfrac{1}{2}\ \gamma\ B\ N_\gamma\ s_\gamma\ d_\gamma\ i_\gamma$$

where

q_{ult} = ultimate bearing capacity

c = cohesion or undrained strength

q = effective surcharge at bottom of foundation, = γD_f

γ = unit weight of soil

B = foundation width

s_c, s_q, s_γ = shape factors, which are a function of foundation width to length

d_c, d_q, d_γ = depth factors, which account for embedment effects

i_c, i_q, i_γ = load inclination factors

N_c, N_q, N_γ = bearing capacity factors, which are a function of ϕ.

γ in the third term is the unit weight of soil below the foundation, whereas the unit weight of the soil above the bottom of the footing is used in determining q in the second term.

BEARING CAPACITY FACTORS

Bearing capacity factors computed based on relationships proposed by Vesic (1973), which are presented in Chapter 3 of Winterkorn and Fang (1975).

$$N_q = e^{\pi \tan\varphi} \tan^2\left(45 + \frac{\phi}{2}\right)$$

$$N_c = (N_q - 1)\ \cot\phi$$, but = 5.14 for $\phi = 0$.

$$N_\gamma = 2\ (N_q + 1)\ \tan\phi$$

SHAPE FACTORS

$$s_c = 1 + \frac{B}{L} \cdot \frac{N_q}{N_c}$$

$$s_q = 1 + \frac{B}{L} \tan\phi$$

$$s_\gamma = 1 - 0.4 \cdot \frac{B}{L}$$

DEPTH FACTORS

For $\frac{D_f}{B} \le 1$:

$$d_c = d_q - \frac{(1 - d_q)}{N_q \cdot \tan\phi} \text{ for } \phi > 0 \text{ and } d_c = 1 + 0.4\left(\frac{D_f}{B}\right) \text{ for } \phi = 0.$$

$$d_q = 1 + 2\tan\phi \cdot (1 - \sin\phi)^2 \cdot \left(\frac{D_f}{B}\right)$$

$$d_\gamma = 1$$

INCLINATION FACTORS

$$i_q = \left(1 - \frac{F_H}{F_V + B' L' c \cot\phi}\right)^m$$

$$i_c = i_q - \frac{(1 - i_q)}{N_c \cdot \tan\phi} \text{ for } \phi > 0 \text{ and } i_c = 1 - \left(\frac{m F_H}{B' L' c N_c}\right) \text{ for } \phi = 0$$

$$i_\gamma = \left(1 - \frac{F_H}{F_V + B' L' c \cot\phi}\right)^{m+1}$$

Where: F_H and F_V are the total horizontal and vertical forces acting on the footing and

m_B = (2 + B/L) / (1 + B/L)

m_L = (2 + L/B) / (1 + L/B)

STATIC BEARING CAPACITY OF THE CANISTER TRANSFER BUILDING

The following pages present the details of the bearing capacity analyses for the static load cases. These cases are identified as follows:

Case IA Static using undrained strength parameters ($\phi = 0°$ & $c = 3.18$ ksf).

Case IB Static using effective-stress strength parameters ($\phi = 30°$ & $c = 0$).

Table 2.6-9 presents the results of the bearing capacity analyses for these static load cases. The minimum factor of safety required for static load cases is 3.

As indicated in this table, the gross allowable bearing pressure for the Canister Transfer Building to obtain a factor of safety of 3.0 against a shear failure from static loads is greater than 6.5 ksf. However, loading the foundation to this value may result in undesirable settlements. This minimum allowable value was obtained in analyses that conservatively assume $\phi = 0°$ and $c = 3.18$ ksf, the average undrained strength for the soils in the upper layer at the site, to model the end of construction. Using the estimated effective-stress strength of $\phi = 30°$ and $c = 0$ results in higher allowable bearing pressures. As shown in Table 2.6-9, the gross allowable bearing capacity of the Canister Transfer Building for static loads for these soil strengths is 56.6 ksf.

CALCULATION IDENTIFICATION NUMBER				PAGE 27
J.O. OR W.O. NO.	DIVISION & GROUP	CALCULATION NO.	OPTIONAL TASK CODE	
05996.02	G(B)	13-5	N/A	

ALLOWABLE BEARING CAPACITY OF CANISTER TRANSFER BUILDING

Static Analysis: **Case** **IA - Static** | **0 % in N-S, 0 % in Vert 0 % in E-W**

Soil Properties:

s_u = **3,180** Average undrained strength (psf) in upper ~30' layer
ϕ = **0** Friction Angle (degrees)
γ = **90** Unit weight of soil (pcf)
γ_{surch} = **80** Unit weight of surcharge (pcf)

Foundation Properties:

B' = **240.0** Footing Width - ft (E-W) L' = **279.5** Length - ft (N-S)
D_f = **5** Depth of Footing (ft)
β = **0.0** Angle of load inclination from vertical (degrees)
FS = **3** Factor of Safety required for $q_{allowable}$.
F_V = **97,749** k EQ_V = **0** k
$EQ_{H\ E\text{-}W}$ = **0** k + $EQ_{H\ N\text{-}S}$ = **0** k = **0** k for F_H

$q_{ult} = c\, N_c\, s_c\, d_c\, i_c + \gamma_{surch}\, D_f\, N_q\, s_q\, d_q\, i_q + 1/2\, \gamma\, B\, N_\gamma\, s_\gamma\, d_\gamma\, i_\gamma$

General Bearing Capacity Equation, based on Winterkorn & Fang (1975)

$N_c = (N_q - 1)\ \cot(\phi)$, but = 5.14 for $\phi = 0$	=	5.14	Eq 3.6 & Table 3.2
$N_q = e^{\pi \tan\phi}\ \tan^2(\pi/4 + \phi/2)$	=	1.00	Eq 3.6
$N_\gamma = 2\,(N_q + 1)\ \tan(\phi)$	=	0.00	Eq 3.8
$s_c = 1 + (B/L)(N_q/N_c)$	=	1.17	Table 3.2
$s_q = 1 + (B/L)\tan\phi$	=	1.00	"
$s_\gamma = 1 - 0.4\,(B/L)$	=	0.66	"
For $D_f/B \leq 1$: $d_q = 1 + 2\tan\phi\ (1 - \sin\phi)^2\, D_f/B$	=	1.00	Eq 3.26
$d_\gamma = 1$	=	1.00	"
For $\phi > 0$: $d_c = d_q - (1-d_q) / (N_q \tan\phi)$	=	N/A	
For $\phi = 0$: $d_c = 1 + 0.4\,(D_f/B)$	=	1.01	Eq 3.27

No inclined loads; therefore, $i_c = i_q = i_\gamma = 1.0$.

			N_c term		N_q term		N_γ term
Gross q_{ult} =	19,635	psf =	19,235	+	400	+	0

q_{all} = **6,540** psf = q_{ult} / FS

q_{actual} = **1,457** psf = $(F_v + EQ_v) / (B' \times L')$

FS_{actual} = **13.47** = q_{ult} / q_{actual} > **3** **Hence OK**

CALCULATION IDENTIFICATION NUMBER				PAGE 28
J.O. OR W.O. NO.	DIVISION & GROUP	CALCULATION NO.	OPTIONAL TASK CODE	
05996.02	G(B)	13-5	N/A	

ALLOWABLE BEARING CAPACITY OF CANISTER TRANSFER BUILDING

Static Analysis: **Case IB - Static** | **0 % in N-S, 0 % in Vert 0 % in E-W**

Soil Properties:

s_u = **0** Average undrained strength (psf) in upper ~30' layer
ϕ = **30** Friction Angle (degrees)
γ = **90** Unit weight of soil (pcf)
γ_{surch} = **80** Unit weight of surcharge (pcf)

Foundation Properties:

B' = **240.0** Footing Width - ft (E-W) L' = **279.5** Length - ft (N-S)
D_f = **5** Depth of Footing (ft)
β = **0.0** Angle of load inclination from vertical (degrees)
FS = **3** Factor of Safety required for $q_{allowable}$.
F_V = **97,749** k EQ_V = **0** k
$EQ_{H\ E\text{-}W}$ = **0** k + $EQ_{H\ N\text{-}S}$ = **0** k = **0** k for F_H

$q_{ult} = c\, N_c\, s_c\, d_c\, i_c + \gamma_{surch}\, D_f\, N_q\, s_q\, d_q\, i_q + 1/2\, \gamma\, B\, N_\gamma\, s_\gamma\, d_\gamma\, i_\gamma$ **General Bearing Capacity Equation, based on Winterkorn & Fang (1975)**

$N_c = (N_q - 1)\cot(\phi)$, but = 5.14 for $\phi = 0$	=	30.14	Eq 3.6 & Table 3.2
$N_q = e^{\pi \tan\phi} \tan^2(\pi/4 + \phi/2)$	=	18.40	Eq 3.6
$N_\gamma = 2(N_q + 1)\tan(\phi)$	=	22.40	Eq 3.8
$s_c = 1 + (B/L)(N_q/N_c)$	=	1.52	Table 3.2
$s_q = 1 + (B/L)\tan\phi$	=	1.50	"
$s_\gamma = 1 - 0.4\,(B/L)$	=	0.66	"
For $D_f/B \leq 1$: $d_q = 1 + 2\tan\phi\,(1 - \sin\phi)^2\, D_f/B$	=	1.01	Eq 3.26
$d_\gamma = 1$	=	1.00	"
For $\phi > 0$: $d_c = d_q - (1-d_q)/(N_q \tan\phi)$	=	1.01	
For $\phi = 0$: $d_c = 1 + 0.4\,(D_f/B)$	=	N/A	Eq 3.27

No inclined loads; therefore, $i_c = i_q = i_\gamma = 1.0$.

			N_c term		N_q term		N_γ term
Gross q_{ult} =	**169,921**	**psf =**	**0**	+	**11,076**	+	**158,845**

q_{all} = 56,640 psf = q_{ult} / FS

q_{actual} = 1,457 psf = (F_v + EQ_v) / (B' x L')

FS_{actual} = 116.61 = q_{ult} / q_{actual} > 3 Hence OK

DYNAMIC BEARING CAPACITY OF THE CANISTER TRANSFER BUILDING

The following pages present the details of the bearing capacity analyses for the dynamic load cases. These analyses use the dynamic loads for the building that were developed in Calculation 05996.02-SC-5, (S&W, 2001). The development of these dynamic loads is described in Section 4.7.1.5.3 of the SAR. As in the structural analyses discussed in SAR Section 4.7.1.5.3., the seismic loads used in these analyses were combined using 100% of the enveloped zero period accelerations (ZPA) in one direction with 40% of the enveloped ZPA in each of the other two directions. The resulting dynamic loading cases are identified as follows:

Case II	100%	N-S direction,	0%	Vertical direction,	100%	E-W direction.
Case IIIA	40%	N-S direction,	-100%	Vertical direction,	40%	E-W direction.
Case IIIB	40%	N-S direction,	-40%	Vertical direction,	100%	E-W direction.
Case IIIC	100%	N-S direction,	-40%	Vertical direction,	40%	E-W direction.
Case IVA	40%	N-S direction,	100%	Vertical direction,	40%	E-W direction.
Case IVB	40%	N-S direction,	40%	Vertical direction,	100%	E-W direction.
Case IVC	100%	N-S direction,	40%	Vertical direction,	40%	E-W direction.

Table 2.6-10 presents the results of the bearing capacity analyses for these cases, which include static loads plus dynamic loads due to the earthquake. Because the *in situ* fine-grained soils are not expected to fully drain during the rapid cycling of load during the earthquake, these cases are analyzed using the average undrained strength applicable for the soils within the upper layer ($\phi = 0°$ and $c = 3.18$ ksf). As indicated above, for these cases including dynamic loads from the design basis ground motion, the minimum acceptable factor of safety is 1.1.

Table 2.6-10 indicates the minimum factor of safety against a dynamic bearing capacity failure was obtained for Load Case II, the load combination of full static, 100% of the seismic forces acting in the N-S direction and the E-W direction and 0% in the upward direction. This load case resulted in an actual soil bearing pressure of 2.4 ksf, compared with an ultimate bearing capacity of 13.2 ksf. The resulting factor of safety against a bearing capacity failure for this load case is ~5.5, which is much greater than 1.1, the minimum allowable factor of safety for seismic loading cases. In these analyses, no credit was taken for the fact that strength of cohesive soil increases as the rate of loading increases. Therefore, the Canister Transfer Building has an adequate factor of safety against a dynamic bearing capacity failure.

ALLOWABLE BEARING CAPACITY OF CANISTER TRANSFER BUILDING

PSHA 2,000-Yr Earthquake: Case II | **100 % in N-S, 0 % in Vert 100 % in E-W**

Soil Properties:

s_u =	**3,180**	Average undrained strength (psf) in upper ~30' layer
ϕ =	**0**	Friction Angle (degrees)
γ =	**90**	Unit weight of soil (pcf)
γ_{surch} =	**80**	Unit weight of surcharge (pcf)

Foundation Properties:

B' =	**184.6**	Footing Width - ft (E-W) L' = **221.2** Length - ft (N-S)
D_f =	**5**	Depth of Footing (ft)
β =	**45.7**	Angle of load inclination from vertical (degrees)
FS =	**1.1**	Factor of Safety required for $q_{allowable}$.

F_V = **97,749** k EQ_V = **0** k

$EQ_{H\,E\text{-}W}$ = **99,997** k + $EQ_{H\,N\text{-}S}$ = **111,108** k = **149,480** k for F_H

$q_{ult} = c\,N_c\,s_c\,d_c\,i_c + \gamma_{surch}\,D_f\,N_q\,s_q\,d_q\,i_q + 1/2\,\gamma\,B\,N_\gamma\,s_\gamma\,d_\gamma\,i_\gamma$ **General Bearing Capacity Equation, based on Winterkorn & Fang (1975)**

$N_c = (N_q - 1)\cot(\phi)$, but = 5.14 for $\phi = 0$	=	5.14	Eq 3.6 & Table 3.2
$N_q = e^{\pi \tan\phi} \tan^2(\pi/4 + \phi/2)$	=	1.00	Eq 3.6
$N_\gamma = 2\,(N_q + 1)\tan(\phi)$	=	0.00	Eq 3.8
$s_c = 1 + (B/L)(N_q/N_c)$	=	1.16	Table 3.2
$s_q = 1 + (B/L)\tan\phi$	=	1.00	"
$s_\gamma = 1 - 0.4\,(B/L)$	=	0.67	"
For $D_f/B \le 1$: $d_q = 1 + 2\tan\phi\,(1 - \sin\phi)^2\,D_f/B$	=	1.00	Eq 3.26
$d_\gamma = 1$	=	1.00	"
For $\phi > 0$: $d_c = d_q - (1-d_q)/(N_q\tan\phi)$	=	N/A	
For $\phi = 0$: $d_c = 1 + 0.4\,(D_f/B)$	=	1.01	Eq 3.27
$m_B = (2 + B/L)/(1 + B/L)$	=	1.54	Eq 3.18a
$m_L = (2 + L/B)/(1 + L/B)$	=	1.46	Eq 3.18b
If $EQ_{H\,N\text{-}S} > 0$: $\theta_n = \tan^{-1}(EQ_{H\,E\text{-}W}/EQ_{H\,N\text{-}S})$	=	0.73 rad	
$m_n = m_L\cos^2\theta_n + m_B\sin^2\theta_n$	=	1.50	Eq 3.18c
For $\phi = 0$: $i_c = 1 - (m\,F_H/B'\,L'\,c\,N_c)$	=	0.66	Eq 3.16a
$i_q = \{1 - F_H/[(F_v + EQ_v) + B'\,L'\,c\cot\phi]\}^m$	=	1.00	Eq 3.14a
$i_\gamma = \{1 - F_H/[(F_v + EQ_v) + B'\,L'\,c\cot\phi]\}^{m+1}$	=	0.00	Eq 3.17a

			N_c term		N_q term		N_γ term
Gross q_{ult} =	**13,171**	**psf =**	**12,771**	**+**	**400**	**+**	**0**

q_{all} = 11,970 psf = q_{ult} / FS

q_{actual} = 2,394 psf = (F_v + EQ_v) / (B' x L')

FS_{actual} = 5.50 = q_{ult} / q_{actual} > 1.1 Hence OK

CALCULATION IDENTIFICATION NUMBER				PAGE 31
J.O. OR W.O. NO.	DIVISION & GROUP	CALCULATION NO.	OPTIONAL TASK CODE	
05996.02	G(B)	13-5	N/A	

ALLOWABLE BEARING CAPACITY OF CANISTER TRANSFER BUILDING

PSHA 2,000-Yr Earthquake: Case IIIA — **40 % in N-S, -100 % in Vert 40 % in E-W**

Soil Properties:

s_u = **3,180** Average undrained strength (psf) in upper ~30' layer
ϕ = **0** Friction Angle (degrees)
γ = **90** Unit weight of soil (pcf)
γ_{surch} = **80** Unit weight of surcharge (pcf)

Foundation Properties:

B' = **119.5** Footing Width - ft (E-W) L' = **152.6** Length - ft (N-S)
D_f = **5** Depth of Footing (ft)
β = **65.8** Angle of load inclination from vertical (degrees)
FS = **1.1** Factor of Safety required for $q_{allowable}$.
F_V = **97,749** k EQ_V = **-79,779** k
$EQ_{H\ E\text{-}W}$ = **39,999** k + $EQ_{H\ N\text{-}S}$ = **44,443** k = **59,792** k for F_H

$q_{ult} = c\, N_c\, s_c\, d_c\, i_c + \gamma_{surch}\, D_f\, N_q\, s_q\, d_q\, i_q + 1/2\, \gamma\, B\, N_\gamma\, s_\gamma\, d_\gamma\, i_\gamma$ **General Bearing Capacity Equation, based on Winterkorn & Fang (1975)**

$N_c = (N_q - 1)\cot(\phi)$, but = 5.14 for $\phi = 0$	=	5.14	Eq 3.6 & Table 3.2
$N_q = e^{\pi \tan\phi} \tan^2(\pi/4 + \phi/2)$	=	1.00	Eq 3.6
$N_\gamma = 2\,(N_q + 1)\tan(\phi)$	=	0.00	Eq 3.8
$s_c = 1 + (B/L)(N_q/N_c)$	=	1.15	Table 3.2
$s_q = 1 + (B/L)\tan\phi$	=	1.00	"
$s_\gamma = 1 - 0.4\,(B/L)$	=	0.69	"
For $D_f/B \le 1$: $d_q = 1 + 2\tan\phi\,(1 - \sin\phi)^2\, D_f/B$	=	1.00	Eq 3.26
$d_\gamma = 1$	=	1.00	"
For $\phi > 0$: $d_c = d_q - (1-d_q)/(N_q \tan\phi)$	=	N/A	
For $\phi = 0$: $d_c = 1 + 0.4\,(D_f/B)$	=	1.02	Eq 3.27
$m_B = (2 + B/L)/(1 + B/L)$	=	1.54	Eq 3.18a
$m_L = (2 + L/B)/(1 + L/B)$	=	1.46	Eq 3.18b
If $EQ_{H\ N\text{-}S} > 0$: $\theta_n = \tan^{-1}(EQ_{H\ E\text{-}W} / EQ_{H\ N\text{-}S})$	=	0.73 rad	
$m_n = m_L \cos^2\theta_n + m_B \sin^2\theta_n$	=	1.50	Eq 3.18c
For $\phi = 0$: $i_c = 1 - (m\, F_H / B'\, L'\, c\, N_c)$	=	0.70	Eq 3.16a
$i_q = \{ 1 - F_H / [(F_v + EQ_v) + B'\, L'\, c \cot\phi] \}^m$	=	1.00	Eq 3.14a
$i_\gamma = \{ 1 - F_H / [(F_v + EQ_v) + B'\, L'\, c \cot\phi] \}^{m+1}$	=	0.00	Eq 3.17a

			N_c term		N_q term		N_γ term
Gross q_{ult} =	**13,804**	**psf =**	**13,404**	+	**400**	+	**0**

q_{all} = 12,540 psf = q_{ult} / FS

q_{actual} = 985 psf = $(F_v + EQ_v)$ / (B' x L')

FS_{actual} = 14.01 = q_{ult} / q_{actual} > 1.1 Hence OK

CALCULATION IDENTIFICATION NUMBER				PAGE 32
J.O. OR W.O. NO.	DIVISION & GROUP	CALCULATION NO.	OPTIONAL TASK CODE	
05996.02	G(B)	13-5	N/A	

ALLOWABLE BEARING CAPACITY OF CANISTER TRANSFER BUILDING

PSHA 2,000-Yr Earthquake: Case IIIB — **40 % in N-S, -40 % in Vert 100 % in E-W**

Soil Properties:

s_u = **3,180** Average undrained strength (psf) in upper ~30' layer
ϕ = **0** Friction Angle (degrees)
γ = **90** Unit weight of soil (pcf)
γ_{surch} = **80** Unit weight of surcharge (pcf)

Foundation Properties:

B' = **157.8** Footing Width - ft (E-W) L' = **244.9** Length - ft (N-S)
D_f = **5** Depth of Footing (ft)
β = **56.6** Angle of load inclination from vertical (degrees)
FS = **1.1** Factor of Safety required for $q_{allowable}$.
F_V = **97,749** k EQ_V = **-31,912** k
$EQ_{H\ E\text{-}W}$ = **99,997** k + $EQ_{H\ N\text{-}S}$ = **44,443** k = **109,429** k for F_H

$q_{ult} = c\, N_c\, s_c\, d_c\, i_c + \gamma_{surch}\, D_f\, N_q\, s_q\, d_q\, i_q + 1/2\, \gamma\, B\, N_\gamma\, s_\gamma\, d_\gamma\, i_\gamma$ — **General Bearing Capacity Equation, based on Winterkorn & Fang (1975)**

$N_c = (N_q - 1)\cot(\phi)$, but = 5.14 for $\phi = 0$	=	5.14	Eq 3.6 & Table 3.2
$N_q = e^{\pi \tan\phi} \tan^2(\pi/4 + \phi/2)$	=	1.00	Eq 3.6
$N_\gamma = 2(N_q + 1)\tan(\phi)$	=	0.00	Eq 3.8
$s_c = 1 + (B/L)(N_q/N_c)$	=	1.13	Table 3.2
$s_q = 1 + (B/L)\tan\phi$	=	1.00	"
$s_\gamma = 1 - 0.4\,(B/L)$	=	0.74	"
For $D_f/B \le 1$: $d_q = 1 + 2\tan\phi\,(1 - \sin\phi)^2\, D_f/B$	=	1.00	Eq 3.26
$d_\gamma = 1$	=	1.00	"
For $\phi > 0$: $d_c = d_q - (1-d_q)/(N_q \tan\phi)$	=	N/A	
For $\phi = 0$: $d_c = 1 + 0.4\,(D_f/B)$	=	1.01	Eq 3.27
$m_B = (2 + B/L)/(1 + B/L)$	=	1.54	Eq 3.18a
$m_L = (2 + L/B)/(1 + L/B)$	=	1.46	Eq 3.18b
If $EQ_{H\ N\text{-}S} > 0$: $\theta_n = \tan^{-1}(EQ_{H\ E\text{-}W}/EQ_{H\ N\text{-}S})$	=	1.15 rad	
$m_n = m_L \cos^2\theta_n + m_B \sin^2\theta_n$	=	1.53	Eq 3.18c
For $\phi = 0$: $i_c = 1 - (m\, F_H / B'\, L'\, c\, N_c)$	=	0.74	Eq 3.16a
$i_q = \{1 - F_H/[(F_v + EQ_v) + B'\, L'\, c \cot\phi]\}^m$	=	1.00	Eq 3.14a
$i_\gamma = \{1 - F_H/[(F_v + EQ_v) + B'\, L'\, c \cot\phi]\}^{m+1}$	=	0.00	Eq 3.17a

			N_c term		N_q term		N_γ term
Gross q_{ult} =	14,103	psf =	13,703	+	400	+	0

q_{all} = **12,820** psf = q_{ult} / FS

q_{actual} = **1,704** psf = $(F_v + EQ_v)/(B' \times L')$

FS_{actual} = **8.28** = q_{ult}/q_{actual} > **1.1 Hence OK**

CALCULATION IDENTIFICATION NUMBER				PAGE 33
J.O. OR W.O. NO.	DIVISION & GROUP	CALCULATION NO.	OPTIONAL TASK CODE	
05996.02	G(B)	13-5	N/A	

ALLOWABLE BEARING CAPACITY OF CANISTER TRANSFER BUILDING

PSHA 2,000-Yr Earthquake: Case IIIC — **100 % in N-S, -40 % in Vert 40 % in E-W**

Soil Properties:

s_u =	3,180	Average undrained strength (psf) in upper ~30' layer	
ϕ =	0	Friction Angle (degrees)	
γ =	90	Unit weight of soil (pcf)	
γ_{surch} =	80	Unit weight of surcharge (pcf)	

Foundation Properties:

B' =	207.1	Footing Width - ft (E-W)	L' = 192.9 Length - ft (N-S)
D_f =	5	Depth of Footing (ft)	
β =	31.3	Angle of load inclination from vertical (degrees)	
FS =	1.1	Factor of Safety required for $q_{allowable}$.	

F_V = 97,749 k EQ_V = -31,912 k

$EQ_{H\,E\text{-}W}$ = 39,999 k + $EQ_{H\,N\text{-}S}$ = 111,108 k = 118,088 k for F_H

$q_{ult} = c\,N_c\,s_c\,d_c\,i_c + \gamma_{surch}\,D_f\,N_q\,s_q\,d_q\,i_q + 1/2\,\gamma\,B\,N_\gamma\,s_\gamma\,d_\gamma\,i_\gamma$ — **General Bearing Capacity Equation, based on Winterkorn & Fang (1975)**

$N_c = (N_q - 1)\cot(\phi)$, but = 5.14 for $\phi = 0$	=	5.14	Eq 3.6 & Table 3.2
$N_q = e^{\pi \tan\phi} \tan^2(\pi/4 + \phi/2)$	=	1.00	Eq 3.6
$N_\gamma = 2\,(N_q + 1)\tan(\phi)$	=	0.00	Eq 3.8
$s_c = 1 + (B/L)(N_q/N_c)$	=	1.21	Table 3.2
$s_q = 1 + (B/L)\tan\phi$	=	1.00	"
$s_\gamma = 1 - 0.4\,(B/L)$	=	0.57	"
For $D_f/B \le 1$: $d_q = 1 + 2\tan\phi\,(1 - \sin\phi)^2\,D_f/B$	=	1.00	Eq 3.26
$d_\gamma = 1$	=	1.00	"
For $\phi > 0$: $d_c = d_q - (1-d_q)/(N_q\tan\phi)$	=	N/A	
For $\phi = 0$: $d_c = 1 + 0.4\,(D_f/B)$	=	1.01	Eq 3.27
$m_B = (2 + B/L)/(1 + B/L)$	=	1.54	Eq 3.18a
$m_L = (2 + L/B)/(1 + L/B)$	=	1.46	Eq 3.18b
If $EQ_{H\,N\text{-}S} > 0$: $\theta_n = \tan^{-1}(EQ_{H\,E\text{-}W}/EQ_{H\,N\text{-}S})$	=	0.35 rad	
$m_n = m_L\cos^2\theta_n + m_B\sin^2\theta_n$	=	1.47	Eq 3.18c
For $\phi = 0$: $i_c = 1 - (m\,F_H/B'\,L'\,c\,N_c)$	=	0.73	Eq 3.16a
$i_q = \{1 - F_H/[(F_v + EQ_v) + B'\,L'\,c\cot\phi]\}^m$	=	1.00	Eq 3.14a
$i_\gamma = \{1 - F_H/[(F_v + EQ_v) + B'\,L'\,c\cot\phi]\}^{m+1}$	=	0.00	Eq 3.17a

			N_c term		N_q term		N_γ term
Gross q_{ult} =	15,045	psf =	14,645	+	400	+	0

q_{all} = 13,670 psf = q_{ult} / FS

q_{actual} = 1,648 psf = $(F_v + EQ_v)/(B' \times L')$

FS_{actual} = 9.13 = q_{ult}/q_{actual} > 1.1 **Hence OK**

CALCULATION IDENTIFICATION NUMBER				PAGE 34
J.O. OR W.O. NO.	DIVISION & GROUP	CALCULATION NO.	OPTIONAL TASK CODE	
05996.02	G(B)	13-5	N/A	

ALLOWABLE BEARING CAPACITY OF CANISTER TRANSFER BUILDING

PSHA 2,000-Yr Earthquake: Case IVA — **40 % in N-S, 100 % in Vert 40 % in E-W**

Soil Properties:

s_u = **3,180** Average undrained strength (psf) in upper ~30' layer
ϕ = **0** Friction Angle (degrees)
γ = **90** Unit weight of soil (pcf)
γ_{surch} = **80** Unit weight of surcharge (pcf)

Foundation Properties:

B' = **227.8** Footing Width - ft (E-W) L' = **266.7** Length - ft (N-S)
D_f = **5** Depth of Footing (ft)
β = **12.7** Angle of load inclination from vertical (degrees)
FS = **1.1** Factor of Safety required for $q_{allowable}$.
F_V = **97,749** k EQ_V = **79,779** k
$EQ_{H\ E\text{-}W}$ = **39,999** k + $EQ_{H\ N\text{-}S}$ = **44,443** k = **59,792** k for F_H

$q_{ult} = c\, N_c\, s_c\, d_c\, i_c + \gamma_{surch}\, D_f\, N_q\, s_q\, d_q\, i_q + 1/2\, \gamma\, B\, N_\gamma\, s_\gamma\, d_\gamma\, i_\gamma$ **General Bearing Capacity Equation, based on Winterkorn & Fang (1975)**

$N_c = (N_q - 1)\cot(\phi)$, but = 5.14 for $\phi = 0$	=	5.14	Eq 3.6 & Table 3.2
$N_q = e^{\pi \tan\phi} \tan^2(\pi/4 + \phi/2)$	=	1.00	Eq 3.6
$N_\gamma = 2(N_q + 1)\tan(\phi)$	=	0.00	Eq 3.8
$s_c = 1 + (B/L)(N_q/N_c)$	=	1.17	Table 3.2
$s_q = 1 + (B/L)\tan\phi$	=	1.00	"
$s_\gamma = 1 - 0.4\,(B/L)$	=	0.66	"
For $D_f/B \le 1$: $d_q = 1 + 2\tan\phi\,(1 - \sin\phi)^2\, D_f/B$	=	1.00	Eq 3.26
$d_\gamma = 1$	=	1.00	"
For $\phi > 0$: $d_c = d_q - (1-d_q)/(N_q \tan\phi)$	=	N/A	
For $\phi = 0$: $d_c = 1 + 0.4\,(D_f/B)$	=	1.01	Eq 3.27
$m_B = (2 + B/L)/(1 + B/L)$	=	1.54	Eq 3.18a
$m_L = (2 + L/B)/(1 + L/B)$	=	1.46	Eq 3.18b
If $EQ_{H\ N\text{-}S} > 0$: $\theta_n = \tan^{-1}(EQ_{H\ E\text{-}W} / EQ_{H\ N\text{-}S})$	=	0.73 rad	
$m_n = m_L \cos^2\theta_n + m_B \sin^2\theta_n$	=	1.50	Eq 3.18c
For $\phi = 0$: $i_c = 1 - (m\, F_H / B'\, L'\, c\, N_c)$	=	0.91	Eq 3.16a
$i_q = \{1 - F_H / [(F_v + EQ_v) + B'\, L'\, c \cot\phi]\}^m$	=	1.00	Eq 3.14a
$i_\gamma = \{1 - F_H / [(F_v + EQ_v) + B'\, L'\, c \cot\phi]\}^{m+1}$	=	0.00	Eq 3.17a

			N_c term		N_q term		N_γ term
Gross q_{ult} =	17,897	psf =	17,497	+	400	+	0

q_{all} = **16,260** psf = q_{ult} / FS

q_{actual} = **2,923** psf = $(F_v + EQ_v)/(B' \times L')$

FS_{actual} = **6.12** = q_{ult} / q_{actual} > **1.1 Hence OK**

CALCULATION IDENTIFICATION NUMBER				PAGE 35
J.O. OR W.O. NO.	DIVISION & GROUP	CALCULATION NO.	OPTIONAL TASK CODE	
05996.02	G(B)	13-5	N/A	

ALLOWABLE BEARING CAPACITY OF CANISTER TRANSFER BUILDING

PSHA 2,000-Yr Earthquake: Case IVB — **40 % in N-S, 40 % in Vert 100 % in E-W**

Soil Properties:

s_u = **3,180** Average undrained strength (psf) in upper ~30' layer
ϕ = **0** Friction Angle (degrees)
γ = **90** Unit weight of soil (pcf)
γ_{surch} = **80** Unit weight of surcharge (pcf)

Foundation Properties:

B' = **198.2** Footing Width - ft (E-W) L' = **261.9** Length - ft (N-S)
D_f = **5** Depth of Footing (ft)
β = **37.6** Angle of load inclination from vertical (degrees)
FS = **1.1** Factor of Safety required for $q_{allowable}$.
F_V = **97,749** k EQ_V = **31,912** k
$EQ_{H\ E\text{-}W}$ = **99,997** k + $EQ_{H\ N\text{-}S}$ = **44,443** k = **109,429** k for F_H

$q_{ult} = c\, N_c\, s_c\, d_c\, i_c + \gamma_{surch}\, D_f\, N_q\, s_q\, d_q\, i_q + 1/2\, \gamma\, B\, N_\gamma\, s_\gamma\, d_\gamma\, i_\gamma$ **General Bearing Capacity Equation, based on Winterkorn & Fang (1975)**

$N_c = (N_q - 1)\cot(\phi)$, but = 5.14 for $\phi = 0$	=	5.14	Eq 3.6 & Table 3.2
$N_q = e^{\pi \tan\phi} \tan^2(\pi/4 + \phi/2)$	=	1.00	Eq 3.6
$N_\gamma = 2(N_q + 1)\tan(\phi)$	=	0.00	Eq 3.8
$s_c = 1 + (B/L)(N_q/N_c)$	=	1.15	Table 3.2
$s_q = 1 + (B/L)\tan\phi$	=	1.00	"
$s_\gamma = 1 - 0.4\,(B/L)$	=	0.70	"
For $D_f/B \le 1$: $d_q = 1 + 2\tan\phi\,(1 - \sin\phi)^2\, D_f/B$	=	1.00	Eq 3.26
$d_\gamma = 1$	=	1.00	"
For $\phi > 0$: $d_c = d_q - (1-d_q)/(N_q \tan\phi)$	=	N/A	
For $\phi = 0$: $d_c = 1 + 0.4\,(D_f/B)$	=	1.01	Eq 3.27
$m_B = (2 + B/L)/(1 + B/L)$	=	1.54	Eq 3.18a
$m_L = (2 + L/B)/(1 + L/B)$	=	1.46	Eq 3.18b
If $EQ_{H\ N\text{-}S} > 0$: $\theta_n = \tan^{-1}(EQ_{H\ E\text{-}W} / EQ_{H\ N\text{-}S})$	=	1.15 rad	
$m_n = m_L \cos^2\theta_n + m_B \sin^2\theta_n$	=	1.53	Eq 3.18c
For $\phi = 0$: $i_c = 1 - (m\, F_H / B'\, L'\, c\, N_c)$	=	0.80	Eq 3.16a
$i_q = \{1 - F_H / [(F_v + EQ_v) + B'\, L'\, c \cot\phi]\}^m$	=	1.00	Eq 3.14a
$i_\gamma = \{1 - F_H / [(F_v + EQ_v) + B'\, L'\, c \cot\phi]\}^{m+1}$	=	0.00	Eq 3.17a

			N_c term		N_q term		N_γ term
Gross q_{ult} =	15,616	psf =	15,216	+	400	+	0

q_{all} = **14,190** psf = q_{ult} / FS

q_{actual} = **2,497** psf = $(F_v + EQ_v)$ / (B' x L')

FS_{actual} = **6.25** = q_{ult} / q_{actual} > **1.1 Hence OK**

CALCULATION IDENTIFICATION NUMBER				PAGE 36
J.O. OR W.O. NO.	DIVISION & GROUP	CALCULATION NO.	OPTIONAL TASK CODE	
05996.02	G(B)	13-5	N/A	

ALLOWABLE BEARING CAPACITY OF CANISTER TRANSFER BUILDING

PSHA 2,000-Yr Earthquake: Case IVC | **100 % in N-S, 40 % in Vert 40 % in E-W**

Soil Properties:

s_u = **3,180** Average undrained strength (psf) in upper ~30' layer
ϕ = **0** Friction Angle (degrees)
γ = **90** Unit weight of soil (pcf)
γ_{surch} = **80** Unit weight of surcharge (pcf)

Foundation Properties:

B' = **223.3** Footing Width - ft (E-W) L' = **235.5** Length - ft (N-S)
D_f = **5** Depth of Footing (ft)
β = **17.1** Angle of load inclination from vertical (degrees)
FS = **1.1** Factor of Safety required for $q_{allowable}$.
F_V = **97,749** k EQ_V = **31,912** k
$EQ_{H\ E\text{-}W}$ = **39,999** k + $EQ_{H\ N\text{-}S}$ = **111,108** k = **118,088** k for F_H

$q_{ult} = c\, N_c\, s_c\, d_c\, i_c + \gamma_{surch}\, D_f\, N_q\, s_q\, d_q\, i_q + 1/2\, \gamma\, B\, N_\gamma\, s_\gamma\, d_\gamma\, i_\gamma$ **General Bearing Capacity Equation, based on Winterkorn & Fang (1975)**

$N_c = (N_q - 1)\cot(\phi)$, but = 5.14 for $\phi = 0$	=	5.14	Eq 3.6 & Table 3.2
$N_q = e^{\pi \tan\phi} \tan^2(\pi/4 + \phi/2)$	=	1.00	Eq 3.6
$N_\gamma = 2(N_q + 1)\tan(\phi)$	=	0.00	Eq 3.8
$s_c = 1 + (B/L)(N_q/N_c)$	=	1.18	Table 3.2
$s_q = 1 + (B/L)\tan\phi$	=	1.00	"
$s_\gamma = 1 - 0.4\,(B/L)$	=	0.62	"
For $D_f/B \leq 1$: $d_q = 1 + 2\tan\phi\,(1 - \sin\phi)^2\, D_f/B$	=	1.00	Eq 3.26
$d_\gamma = 1$	=	1.00	"
For $\phi > 0$: $d_c = d_q - (1 - d_q) / (N_q \tan\phi)$	=	N/A	
For $\phi = 0$: $d_c = 1 + 0.4\,(D_f/B)$	=	1.01	Eq 3.27
$m_B = (2 + B/L) / (1 + B/L)$	=	1.54	Eq 3.18a
$m_L = (2 + L/B) / (1 + L/B)$	=	1.46	Eq 3.18b
If $EQ_{H\ N\text{-}S} > 0$: $\theta_n = \tan^{-1}(EQ_{H\ E\text{-}W} / EQ_{H\ N\text{-}S})$	=	0.35 rad	
$m_n = m_L \cos^2\theta_n + m_B \sin^2\theta_n$	=	1.47	Eq 3.18c
For $\phi = 0$: $i_c = 1 - (m\, F_H / B'\, L'\, c\, N_c)$	=	0.80	Eq 3.16a
$i_q = \{1 - F_H / [(F_v + EQ_v) + B'\, L'\, c \cot\phi]\}^m$	=	1.00	Eq 3.14a
$i_\gamma = \{1 - F_H / [(F_v + EQ_v) + B'\, L'\, c \cot\phi]\}^{m+1}$	=	0.00	Eq 3.17a

			N_c term		N_q term		N_γ term
Gross q_{ult} =	15,987	psf =	15,587	+	400	+	0

q_{all} = **14,530** psf = q_{ult} / FS

q_{actual} = **2,465** psf = $(F_v + EQ_v) / (B' \times L')$

FS_{actual} = **6.49** = q_{ult} / q_{actual} > **1.1 Hence OK**

CONCLUSIONS

OVERTURNING STABILITY OF THE CANISTER TRANSFER BUILDING

The overturning stability of the Canister Transfer Building is analyzed on Pages 11 to 13 using the dynamic loads for the building due to the PSHA 2,000-yr return period earthquake. These loads, listed in Table 2.6-11, were developed based on the dynamic analysis performed in Calculation 05996.02-SC-5 (S&W, 2001) and are described in SAR Section 4.7.1.5.3. This calculation demonstrates that the factor of safety against overturning of the Canister transfer Building is >1.1; therefore, the Canister Transfer Building has an adequate factor of safety against overturning due to dynamic loadings from the design basis ground motion. The minimum factor of safety against overturning is 1.95, and it applies to overturning about the north-south axis.

SLIDING STABILITY OF THE CANISTER TRANSFER BUILDING

The Canister Transfer Building (CTB) will be founded on clayey soils. The sliding stability of the CTB was evaluated using the loads developed in Calculation 05996.02-SC-5 (S&W, 2001). The static strength of the clayey soils at the bottom of the CTB mat was based on the average of two sets of direct shear tests performed on samples of soils obtained from beneath the Canister Transfer Building at the elevation proposed for founding the mat.

The results of the sliding stability analysis are presented in Table 2.6-13 of this calculation, and they indicate that for all load combinations examined, the factors of safety were acceptable. The lowest factor of safety was 1.15, which applies for Case IIIC, where 100% of the dynamic earthquake forces act in the N-S direction and 40% act in the other two directions. These results assume that only one-half of the passive pressures are available resist sliding and no credit is taken for the fact that the strength of cohesive soils increases as the rate of loading increases (Newmark and Rosenblueth, 1971, Schimming et al, 1966, Casagrande and Shannon, 1948, and Das, 1993); therefore, they represent a conservative lower-bound value of the sliding stability of the Canister Transfer Building founded on in situ silty clay/clayey silt with 5 ft of soil-cement backfill around the foundation.

Additional sliding stability analyses are included that demonstrate that there is additional margin available to resist sliding of the building due to the earthquake loads. In these analyses, it is recognized that the ultimate sliding failure of the building cannot occur until after the full passive resistance of the soil cement adjacent to the mat is exceeded. These analyses use a very conservative estimate of the residual shear strength of the clayey soils under the building, based on the results of the direct shear tests that were performed on specimens of the soils obtained from approximately the elevation of the potential sliding plane under the building. The results of these analyses are presented in Table 2.6-14, and they demonstrate that the factor of safety against sliding is at least 1.26.

The Canister Transfer Building, founded on clayey soils and with the soil-cement backfill, has an adequate factor of safety against sliding due to the dynamic forces from the design basis ground motion. As shown in SAR Figures 2.6-21 through 2.6-23, however, some of the soils underlying the building are cohesionless within the depth zone of about 10 to 20 ft, especially near the southern portion of the building. Simplified analyses were performed to address the possibility that sliding may occur along a deeper slip plane at the clayey soil/sandy soil interface as a result of the earthquake forces.

These analyses included the passive resistance acting on a plane extending from grade down to the top of the cohesionless layer, plus the frictional resistance available along the top of the cohesionless layer. The weight of the clayey soils existing between the top of the cohesionless soils and the bottom of the mat was included in the normal force used to calculate the frictional resistance acting along the top of the cohesionless layer. The factor of safety against sliding along the top of this layer was found to be >1.1 for all of the dynamic load cases; therefore, there is an adequate factor of safety against sliding along the surface of the cohesionless soils underlying the Canister Transfer Building.

BEARING CAPACITY

STATIC BEARING CAPACITY OF THE CANISTER TRANSFER BUILDING

Table 2.6-9 presents the results of the bearing capacity analyses for the following static load cases. The minimum factor of safety required for static load cases is 3.

Case IA Static using undrained strength parameters ($\phi = 0°$ & $c = 3.18$ ksf).

Case IB Static using effective-stress strength parameters ($\phi = 30°$ & $c = 0$).

As indicated in this table, the gross allowable bearing pressure for the Canister Transfer Building to obtain a factor of safety of 3.0 against a shear failure from static loads is greater than 6.5 ksf. However, loading the foundation to this value may result in undesirable settlements. This minimum allowable value was obtained in analyses that conservatively assume $\phi = 0°$ and $c = 3.18$ ksf, the average undrained strength for the soils in the upper layer at the site, to model the end of construction. Using the estimated effective-stress strength of $\phi = 30°$ and $c = 0$ results in higher allowable bearing pressures. As shown in Table 2.6-9, the gross allowable bearing capacity of the Canister Transfer Building for static loads for these soil strengths is 56.6 ksf.

DYNAMIC BEARING CAPACITY OF THE CANISTER TRANSFER BUILDING

The dynamic bearing capacity was analyzed using the dynamic loads for the building that were developed in Calculation 05996.02-SC-5, (S&W, 2001). The development of these dynamic loads is described in SAR Section 4.7.1.5.3. As in the structural analyses discussed in Section 4.7.1.5.3, the seismic loads used in these analyses were combined using 100% of the enveloped zero period accelerations (ZPA) in one direction with 40% of the enveloped ZPA in each of the other two directions.

Table 2.6-10 presents the results of the bearing capacity analyses for the following cases, which include static loads plus dynamic loads due to the earthquake. The minimum factor of safety required for dynamic load cases is 1.1.

Case II	100%	N-S direction,	0%	Vertical direction,	100%	E-W direction.
Case IIIA	40%	N-S direction,	-100%	Vertical direction,	40%	E-W direction.
Case IIIB	40%	N-S direction,	-40%	Vertical direction,	100%	E-W direction.
Case IIIC	100%	N-S direction,	-40%	Vertical direction,	40%	E-W direction.
Case IVA	40%	N-S direction,	100%	Vertical direction,	40%	E-W direction.
Case IVB	40%	N-S direction,	40%	Vertical direction,	100%	E-W direction.
Case IVC	100%	N-S direction,	40%	Vertical direction,	40%	E-W direction.

Table 2.6-10 indicates the minimum factor of safety against a dynamic bearing capacity failure was obtained for Load Case II, the load combination of full static, 100% of the seismic forces acting in the N-S direction and the E-W direction and 0% in the upward direction. This load case resulted in an actual soil bearing pressure of 2.4 ksf, compared with an ultimate bearing capacity of 13.2 ksf. The resulting factor of safety against a bearing capacity failure for this load case is ~5.5, which is much greater than 1.1, the minimum allowable factor of safety for seismic loading cases. In these analyses, no credit was taken for the fact that strength of cohesive soil increases as the rate of loading increases. Therefore, the Canister Transfer Building has an adequate factor of safety against a dynamic bearing capacity failure

REFERENCES

ASCE 4-86, Seismic Analysis of Safety-Related Nuclear Structures and Commentary on Standard for Seismic Analysis of Safety-Related Nuclear Structures, American Society of Civil Engineers, 1986.

Casagrande, A. and W.L. Shannon, 1948. "Strength of Soils under Dynamic Loads," Transactions, ASCE, Vol. 74, No.4, April, pp. 591-608.

ConeTec, 1999, Cone penetration testing report, Private Fuel Storage Facility, prepared for Stone and Webster Engineering Corp., Denver, CO, 2 volumes.

Das, B. M., 1993, Principles of Soil Dynamics, PWS-Kent, Boston, MA, 570 pp.

Geomatrix Consultants, Inc, 2001, "Development of Design Ground Motions for the Private Fuel Storage Facility, Skull Valley, UT," prepared for Stone and Webster Engineering Corp, Denver, CO, March.

Lambe, T.W., and R.V. Whitman, 1969, Soil Mechanics, John Wiley & Sons, Inc., N.Y., 553 pp.

Newmark, N. M., 1965. Fifth Rankine Lecture: "Effects of Earthquakes on Dams and Embankments". Geotechnique, Institution of Civil Engineers, London. pp. 139-60.

Newmark, N. M., and Rosenblueth, E., 1971. Fundamentals of Earthquake Engineering, Prentice-Hall, Englewood Cliffs, NJ, p 437.

SWEC, 1999a. Development of Soil Impedance Functions for Canister Transfer Building. Calculation No. 05996.02-SC-04, Revision 1, Stone & Webster Engineering Corporation.

SWEC, 1999b. Seismic Analysis of Canister Transfer Building. Calculation No. 05996.02-SC-05, Revision 1, Stone & Webster Engineering Corporation.

SWEC, 2000, Calculation No. 05996.02- G(B)-4, Revision 5, Stability Analyses of Storage Pad, Stone & Webster Engineering Corporation.

SWEC, 2000a, Calculation No. 05996.02-G(B)-5, Revision 2, "Document Bases for Geotechnical Parameters Provided in Geotechnical Design Criteria," Stone & Webster Engineering Corporation, Boston, MA.

S&W, 2001. Seismic Analysis of Canister Transfer Building. Calculation No. 05996.02-SC-5, Revision 2, Stone & Webster, Inc.

Vesic, A. S., 1973, "Analysis of Ultimate Loads on Shallow Foundations," *Journal of the Soil Mechanics and Foundations Division*, ASCE, Vol 99, No. SM1, pp 45-73.

Winterkorn, H. F., and Fang, H., 1975, Foundation Engineering Handbook, Van Nostrand Reinhold Co., New York, NY.

TABLE 2.6-9
SUMMARY - ALLOWABLE BEARING CAPACITY OF CANISTER TRANSFER BUILDING
Based on Static Loads

Case	F_V k	$EQ_{H\,N\text{-}S}$ k	$EQ_{H\,E\text{-}W}$ k	$\Sigma M_{@N\text{-}S}$ ft-k	$\Sigma M_{@E\text{-}W}$ ft-k	β_B $EQ_{H\,E\text{-}W}$ deg	β_L $EQ_{H\,N\text{-}S}$ deg	GROSS q_{ult} ksf	GROSS q_{all} ksf	e_B ft	e_L ft	EFFECTIVE B' ft	EFFECTIVE L' ft	EFFECTIVE q_{actual} ksf	FS_{actual}
IA - Static Undrained Strength	97,749	0	0	0	0	0.0	0.0	19.63	**6.54**	0.0	0.0	240.0	279.5	**1.46**	**13.47**
IB - Static Effective Strength	97,749	0	0	0	0	0.0	0.0	169.92	**56.64**	0.0	0.0	240.0	279.5	**1.46**	**116.61**

c =	**3,180**	Undrained strength (psf) & $\phi = 0$.
ϕ =	**30.0**	Effective stress friction angle (deg), c =
B =	**240.0**	Footing width (ft)
L =	**279.5**	Footing length (ft)
D_f =	**5.0**	Depth of footing (ft)
γ =	**90**	Unit weight of soil (pcf)
γ_{surch} =	**80**	Unit weight of surcharge (pcf)
FS =	**3**	Factor of safety for static loads.

F_V = Vertical load (Static + EQ_V)

EQ_H = Earthquake: Horizontal force. $F_H = EQ_{H\,E\text{-}W}$ or $EQ_{H\,N\text{-}S}$

$\beta_B = \tan^{-1}[(EQ_{H\,E\text{-}W}) / F_V]$ = Angle of load inclination from vertical as f(width).

$\beta_L = \tan^{-1}[(EQ_{H\,N\text{-}S}) / F_V]$ = Angle of load inclination from vertical as f(length).

$e_B = \Sigma M_{@N\text{-}S} / F_V$ $\quad$ $e_L = \Sigma M_{@E\text{-}W} / F_V$

$B' = B - 2\,e_B$ $\quad$ $L' = L - 2\,e_L$

$q_{actual} = F_V / (B' \times L')$

TABLE 2.6-10

SUMMARY - ALLOWABLE BEARING CAPACITY OF CANISTER TRANSFER BUILDING

Based on Dynamic Loads Due to Design Basis Ground Motion: PSHA 2,000-yr Return Period

Case	F_V	$EQ_{H\,N\text{-}S}$	$EQ_{H\,E\text{-}W}$	$\Sigma M_{@N\text{-}S}$	$\Sigma M_{@E\text{-}W}$	β_B $EQ_{H\,E\text{-}W}$	β_L $EQ_{H\,N\text{-}S}$	GROSS		e_B	e_L	EFFECTIVE			FS_{actual}
								q_{ult}	q_{all}			B'	L'	q_{actual}	
	k	k	k	ft-k	ft-k	deg	deg	ksf	ksf	ft	ft	ft	ft	ksf	
II	97,749	111,108	99,997	2,706,961	2,849,703	45.7	48.7	13.17	**11.97**	27.7	29.2	184.6	221.2	**2.39**	**5.50**
IIIA	17,970	44,443	39,999	1,082,784	1,139,881	65.8	68.0	13.80	**12.54**	60.3	63.4	119.5	152.6	**0.99**	**14.01**
IIIB	65,837	44,443	99,997	2,706,961	1,139,881	56.6	34.0	14.10	**12.82**	41.1	17.3	157.8	244.9	**1.70**	**8.28**
IIIC	65,837	111,108	39,999	1,082,784	2,849,703	31.3	59.4	15.04	**13.67**	16.4	43.3	207.1	192.9	**1.65**	**9.13**
IVA	177,528	44,443	39,999	1,082,784	1,139,881	12.7	14.1	17.90	**16.26**	6.1	6.4	227.8	266.7	**2.92**	**6.12**
IVB	129,661	44,443	99,997	2,706,961	1,139,881	37.6	18.9	15.62	**14.19**	20.9	8.8	198.2	261.9	**2.50**	**6.25**
IVC	129,661	111,108	39,999	1,082,784	2,849,703	17.1	40.6	15.99	**14.53**	8.4	22.0	223.3	235.5	**2.47**	**6.49**

c = **3,180** Undrained strength (psf)

ϕ = **0.0** Friction angle (deg)

B = **240.0** Footing width (ft)

L = **279.5** Footing length (ft)

D_f = **5.0** Depth of footing (ft)

γ = **90** Unit weight of soil (pcf)

γ_{surch} = **80** Unit weight of surcharge (pcf)

FS = **1.1** Factor of safety for dynamic loads.

F_V = Vertical load (Static + EQ_V)

EQ_H = Earthquake: Horizontal force. $F_H = EQ_{H\,E\text{-}W}$ or $EQ_{H\,N\text{-}S}$

$\beta_B = \tan^{-1}[(EQ_{H\,E\text{-}W}) / F_V]$ = Angle of load inclination from vertical as f(width).

$\beta_L = \tan^{-1}[(EQ_{H\,N\text{-}S}) / F_V]$ = Angle of load inclination from vertical as f(length).

$e_B = \Sigma M_{@N\text{-}S} / F_V$ $\quad$ $e_L = \Sigma M_{@E\text{-}W} / F_V$

$B' = B - 2\,e_B$ $\quad$ $L' = L - 2\,e_L$

$q_{actual} = F_V / (B' \times L')$

[geot]\05996\calc\brng_cap\can_xfr.xls Table 2.6-10

Table 2.6-11

Foundation Loadings for the Canister Transfer Building

JOINT	ELEV	MASS X	MASS Y	MASS Z	Ax	Ay	Az	SHEAR X $F_{H\,N\text{-}S}$	SHEAR Y $F_{V\,Dyn}$	SHEAR Z $F_{H\,E\text{-}W}$	$\Sigma M_{Base\ @\ El\ 93.5}$ $M_{@X}=M_{@N\text{-}S}$	$M_{@Z}=M_{@E\text{-}W}$
	ft	k-sec^2 / ft	k-sec^2 / ft	k-sec^2 / ft	g	g	g	k	k	k	ft-k	ft-k
0	94.25	260.1	260.1	260.1	1.047	0.78	0.92	8,761	6,551	7,699	5,774	6,571
1	95	1,908.0	1,908.0	1,908.0	1.047	0.78	0.92	64,265	48,055	56,470	367,055	417,724
2	130	420.4	420.4	420.4	1.111	0.82	0.99	15,023	11,106	13,446	490,773	548,331
3	170	304.3	304.3	170.3	1.778	0.91	1.19	17,402	8,939	6,493	496,728	1,331,291
4	190	144.7	117.1	144.7	1.215	0.93	1.41	5,656	3,495	6,554	632,439	545,787
5	190	1.0	27.6	1.0	0	1.84	0.00	0	1,634	0	0	0
6	170	1.0	1.0	134.0	0	0	2.17	0	0	9,336	714,193	0
							TOTALS	111,108	79,779	99,997	2,706,961	2,849,703

B = 240.0 ft

L = 279.5 ft

WEIGHT 97,749 k

FS_{UPLIFT} = 1.23

Depth = 5.0 ft + 1.5 ft deep key with base at Elev 93.5 ft

Note: Elevations are referenced to assumed final grade of Elev 100.
Joint 0 equals clayey soils enclosed by perimeter key with γ = 90 pcf and width of key = 6.5 ft.
Based on masses and accelerations from p 37 of Calc 05996.02-SC-5, Rev. 2, which are applicable for "High" Moduli received from Geomatrix Calc 05996.02-G(PO18)-2, Rev. 1.

Table 2.6-13

Sliding Stability of Canister Transfer Building Using Shear Strength Along Bottom of Plane Formed by 1.5-ft Deep Perimeter Key and Half of Resistance from Soil Cement Using Peak Strength of Clay

Joint	MASS X $k\text{-}sec^2/ft$	MASS Y $k\text{-}sec^2/ft$	MASS Z $k\text{-}sec^2/ft$	N-S a_x g	Vert a_y g	E-W a_z g	Static F_v k	Earthquake $Shear_{N\text{-}S}$ k	Earthquake F_v k	Earthquake $Shear_{E\text{-}W}$ k
0	260.1	260.1	260.1	1.047	0.783	0.920	8,368	8,761	6,551	7,699
1	1,908.0	1,908.0	1,908.0	1.047	0.783	0.920	61,380	64,265	48,055	56,470
2	420.4	420.4	420.4	1.111	0.821	0.994	13,524	15,023	11,106	13,446
3	304.3	304.3	170.3	1.778	0.913	1.185	9,789	17,402	8,939	6,493
4	144.7	117.1	144.7	1.215	0.928	1.408	3,767	5,656	3,495	6,554
5	1.0	27.6	1.0	0.000	1.840	0.000	888	0	1,634	0
6	1.0	1.0	134.0	0.000	0.000	2.166	32	0	0	9,336
						Totals =	**97,749**	**111,108**	**79,779**	**99,997**

CTB Mat Dimensions: **B = 240.0 ft (E-W)**

Depth = 5 ft L = 279.5 ft (N-S)

For ϕ = 0.0 degrees c = 1.70

							Resisting N (k)	*Resisting* T (k)	*Driving* V (k)	FS
Earthquake Vertical Forces Acting Up	**IIIA**	$F_{v(Static)}$ 97,749	40% $F_{H(NS)}$ 44,443	100% $F_{v(Eq)k}$ -79,779	40% $F_{H(EW)}$ 39,999		17,970	135,999	59,792	**2.27**
	IIIB	$F_{v(Static)}$ 97,749	40% $F_{H(NS)}$ 44,443	40% $F_{v(Eq)k}$ -31,912	100% $F_{H(EW)}$ 99,997		65,837	135,999	109,429	**1.24**
	IIIC	$F_{v(Static)}$ 97,749	100% $F_{H(NS)}$ 111,108	40% $F_{v(Eq)k}$ -31,912	40% $F_{H(EW)}$ 39,999		65,837	135,999	118,088	**1.15**
Earthquake Vertical Forces Acting Down	**IVA**	$F_{v(Static)}$ 97,749	40% $F_{H(NS)}$ 44,443	100% $F_{v(Eq)k}$ 79,779	40% $F_{H(EW)}$ 39,999		177,529	135,999	59,792	**2.27**
	IVB	$F_{v(Static)}$ 97,749	40% $F_{H(NS)}$ 44,443	40% $F_{v(Eq)k}$ 31,912	100% $F_{H(EW)}$ 99,997		129,661	135,999	109,429	**1.24**
	IVC	$F_{v(Static)}$ 97,749	100% $F_{H(NS)}$ 111,108	40% $F_{v(Eq)k}$ 31,912	40% $F_{H(EW)}$ 39,999		129,661	135,999	118,088	**1.15**
Soil Cement ΔF_H for q_u (psi) = 250			21,600	N/A	25,155		**for FS_{SC} = 2.0**			

Table 2.6-14

Sliding Stability of Canister Transfer Building Using Shear Strength Along Bottom of Plane Formed by 1.5-ft Deep Perimeter Key and Resistance from Soil Cement Using Residual Strength = 80% of Peak Strength of

Joint	MASS X $k\text{-}sec^2/ft$	MASS Y $k\text{-}sec^2/ft$	MASS Z $k\text{-}sec^2/ft$	N-S a_x g	Vert a_y g	E-W a_z g	Static F_v k	Earthquake $Shear_{N\text{-}S}$ k	Earthquake F_v k	Earthquake $Shear_{E\text{-}W}$ k
0	260.1	260.1	260.1	1.047	0.783	0.920	8,368	8,761	6,551	7,699
1	1,908.0	1,908.0	1,908.0	1.047	0.783	0.920	61,380	64,265	48,055	56,470
2	420.4	420.4	420.4	1.111	0.821	0.994	13,524	15,023	11,106	13,446
3	304.3	304.3	170.3	1.778	0.913	1.185	9,789	17,402	8,939	6,493
4	144.7	117.1	144.7	1.215	0.928	1.408	3,767	5,656	3,495	6,554
5	1.0	27.6	1.0	0.000	1.840	0.000	888	0	1,634	0
6	1.0	1.0	134.0	0.000	0.000	2.166	32	0	0	9,336
						Totals =	**97,749**	**111,108**	**79,779**	**99,997**

CTB Mat Dimensions: B = 240.0 ft (E-W)

Depth = 5 ft L = 279.5 ft (N-S)

For ϕ = 0.0 degrees c = 1.36

							N (k)	T (k)	V (k)	FS
							Resisting		***Driving***	
Earthquake Vertical Forces Acting Up	**IIIA**	$F_{v(Static)}$ 97,749	40% $F_{H(NS)}$ 44,443	100% $F_{v(Eqk)}$ -79,779	40% $F_{H(EW)}$ 39,999		17,970	148,586	59,792	**2.49**
	IIIB	$F_{v(Static)}$ 97,749	40% $F_{H(NS)}$ 44,443	40% $F_{v(Eqk)}$ -31,912	100% $F_{H(EW)}$ 99,997		65,837	148,586	109,429	**1.36**
	IIIC	$F_{v(Static)}$ 97,749	100% $F_{H(NS)}$ 111,108	40% $F_{v(Eqk)}$ -31,912	40% $F_{H(EW)}$ 39,999		65,837	148,586	118,088	**1.26**
Earthquake Vertical Forces Acting Down	**IVA**	$F_{v(Static)}$ 97,749	40% $F_{H(NS)}$ 44,443	100% $F_{v(Eqk)}$ 79,779	40% $F_{H(EW)}$ 39,999		177,529	148,586	59,792	**2.49**
	IVB	$F_{v(Static)}$ 97,749	40% $F_{H(NS)}$ 44,443	40% $F_{v(Eqk)}$ 31,912	100% $F_{H(EW)}$ 99,997		129,661	148,586	109,429	**1.36**
	IVC	$F_{v(Static)}$ 97,749	100% $F_{H(NS)}$ 111,108	40% $F_{v(Eqk)}$ 31,912	40% $F_{H(EW)}$ 39,999		129,661	148,586	118,088	**1.26**
Soil Cement ΔF_H for q_u (psi) = 250			43,200	N/A	50,310		**for FS_{SC} = 1.0**			

FIGURE 1

FOUNDATION SCHEMATIC & COORDINATE SYSTEM

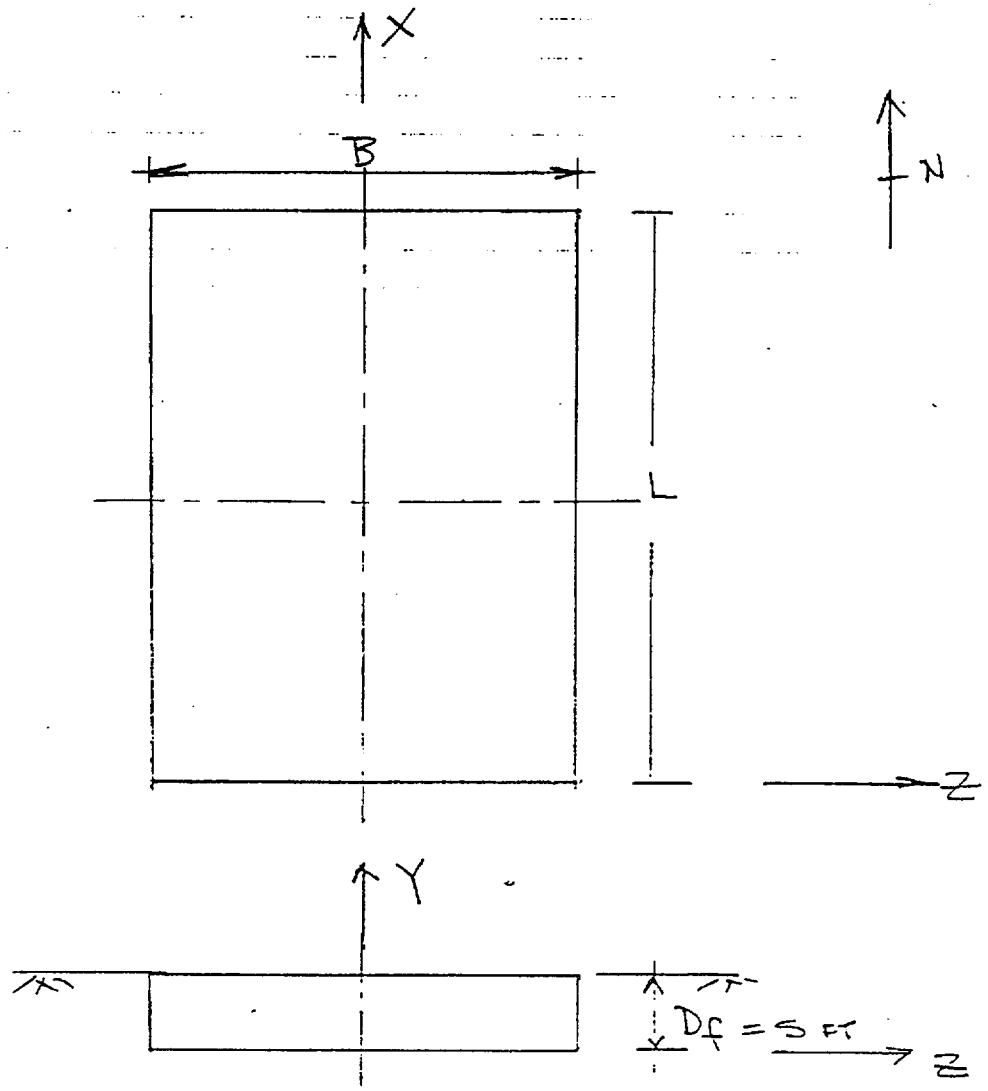

Note: The coordinate system is consistent with that used in Calculation 05996.02-SC-5.

FIGURE 2

CANISTER TRANSFER BUILDING STICK MODEL

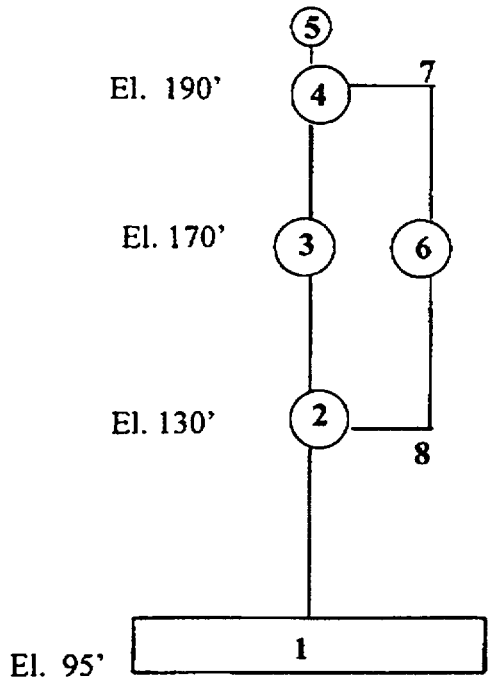

Note: From Calculation 05996.02-SC-5, Rev. 2, Page 8.

CALCULATION IDENTIFICATION NUMBER				PAGE 48
J.O. OR W.O. NO.	DIVISION & GROUP	CALCULATION NO.	OPTIONAL TASK CODE	
05996.02	G(B)	13-5	N/A	

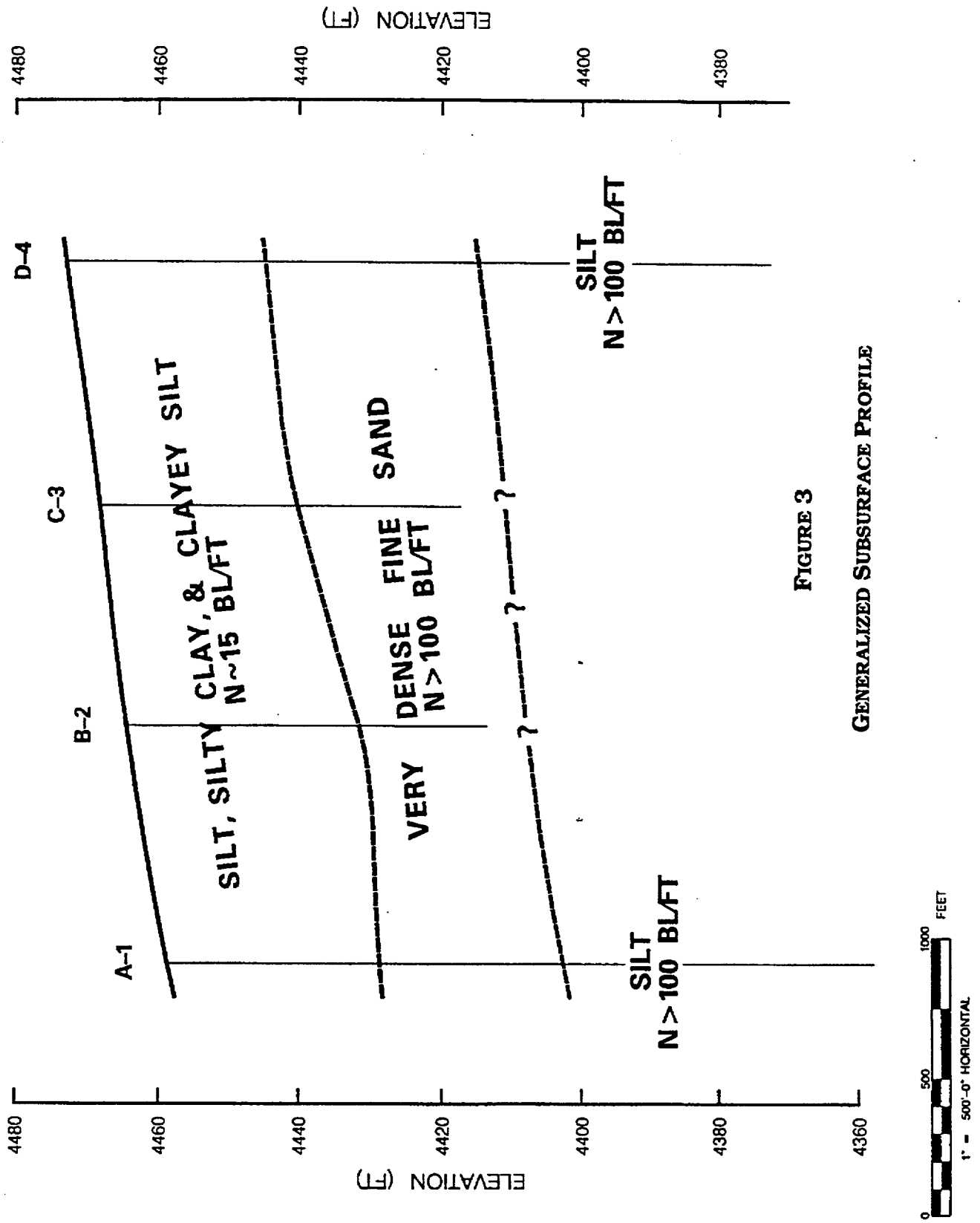

FIGURE 3
GENERALIZED SUBSURFACE PROFILE

Note: From Calculation 05996.01-G(B)-03-1.

FIGURE 4

DETERMINATION OF WEIGHTED AVERAGE VALUE OF S_U BASED ON RELATIVE STRENGTH DIFFERENCE OF DEEPER LYING SOILS MEASURED IN CONE PENETRATION TESTS

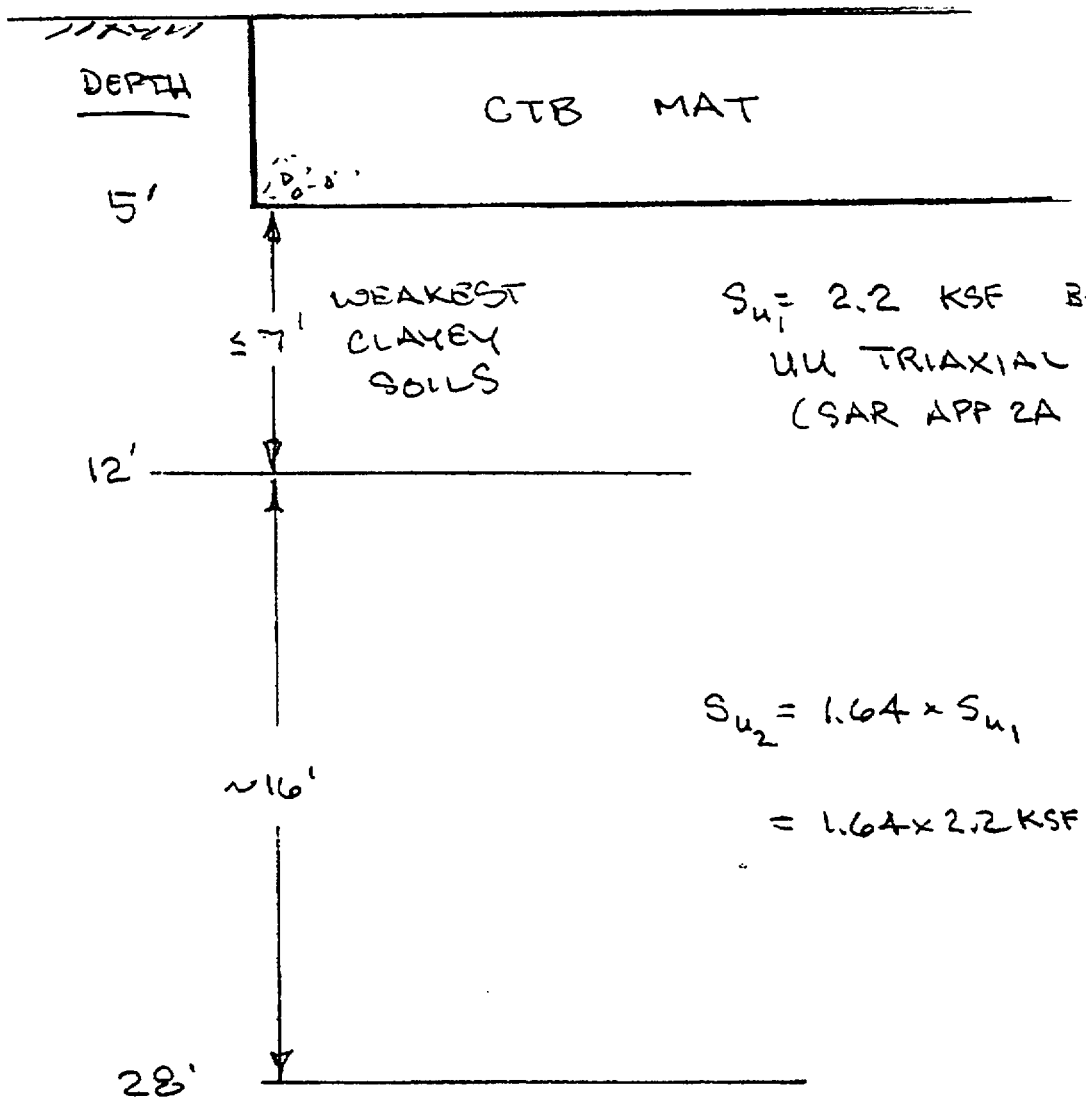

$S_{u_1} = 2.2$ KSF BASED ON UU TRIAXIAL TESTS (SAR APP 2A ATT 2)

$S_{u_2} = 1.64 \times S_{u_1}$

$= 1.64 \times 2.2 \text{ KSF} = 3.6 \text{ KSF}$

$$S_{u_{AVG}} = \frac{7' \times 2.2 \text{ KSF} + 16' \times 1.64 \times 2.2 \text{ KSF}}{23 \text{ FT}} = 3.18 \text{ KSF}$$

CALCULATION IDENTIFICATION NUMBER				PAGE 50
J.O. OR W.O. NO.	DIVISION & GROUP	CALCULATION NO.	OPTIONAL TASK CODE	
05996.02	G(B)	13-5	N/A	

FIGURE 5

ESTIMATE STRESSES UNDER THE CANISTER TRANSFER BUILDING AT COMPLETION OF CONSTRUCTION

Fv = Total dead weight = 97,749 K from Table 2.6-11

A = Area of mat = 240ft x 279.5 ft = 67,080 ft²

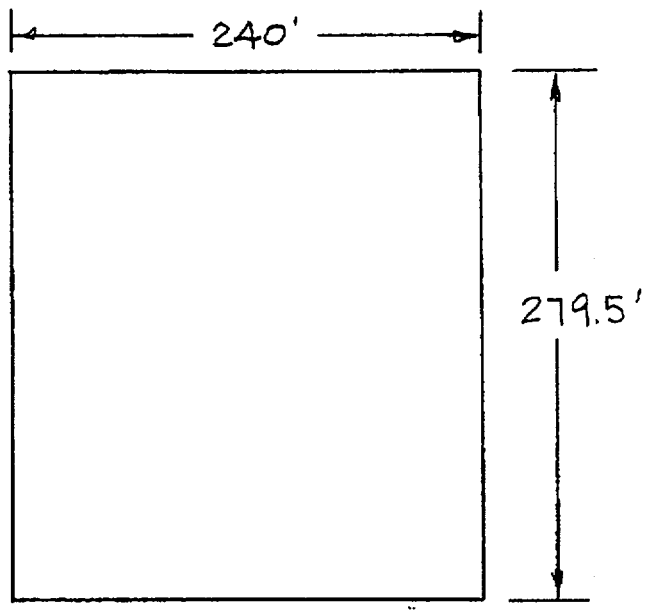

PLAN

$$\sigma = \frac{F_v}{A} = \frac{97{,}749\ K}{67{,}080\ K} = 1.46\ ksf$$

Figure 6

Summary of Triaxial Test Results for Soils Within Depth of ~10 ft of Ground Surface at the Site

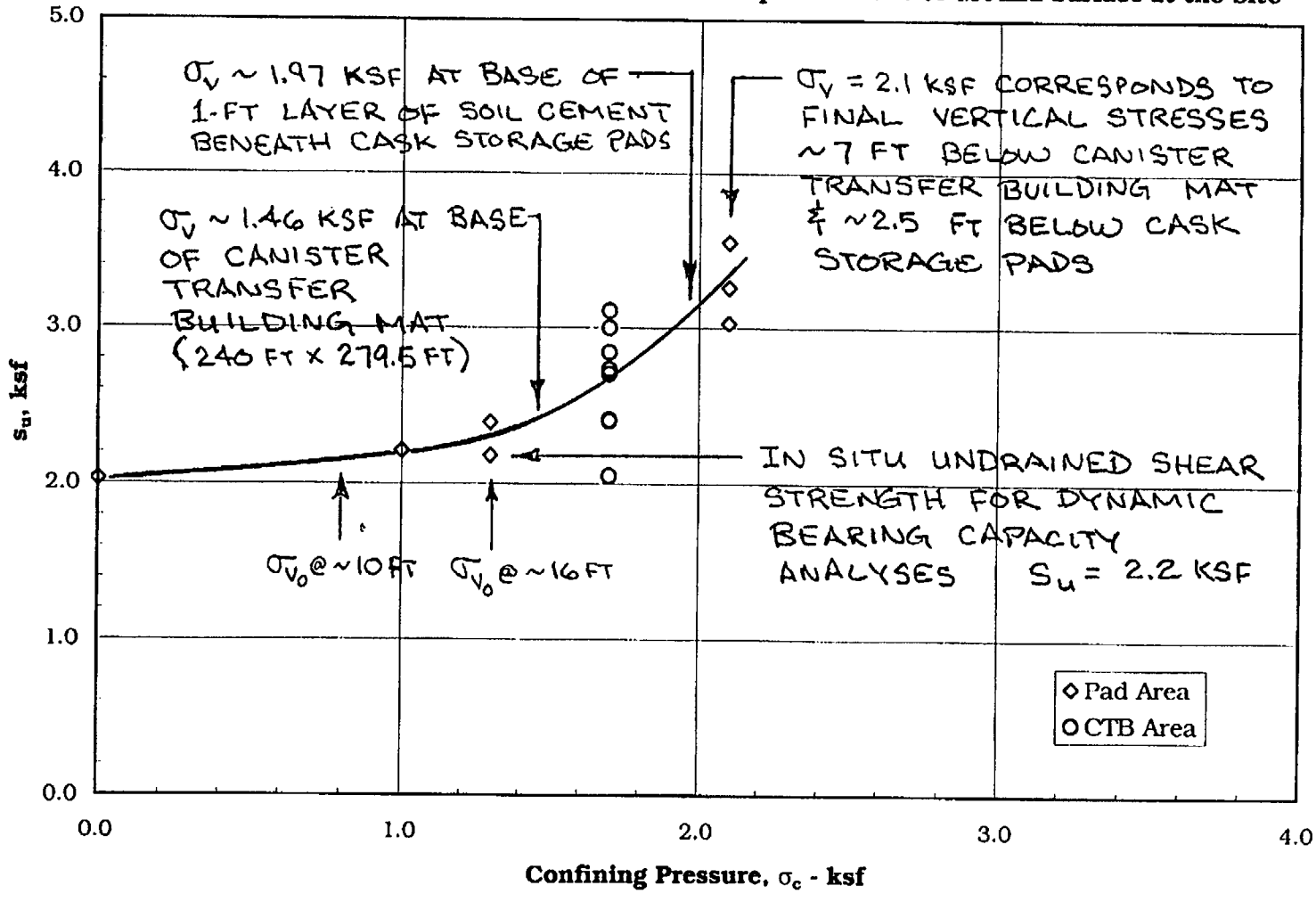

[geot]\05996\lab\triax-1.xls on 5/31/2001

CALCULATION IDENTIFICATION NUMBER				PAGE 52
J.O. OR W.O. NO.	DIVISION & GROUP	CALCULATION NO.	OPTIONAL TASK CODE	
05996.02	G(B)	13-5	N/A	

FIGURE 7
DIRECT SHEAR TEST
Boring CTB-6, Sample U-3B&C
CANISTER TRANSFER BUILDING AREA

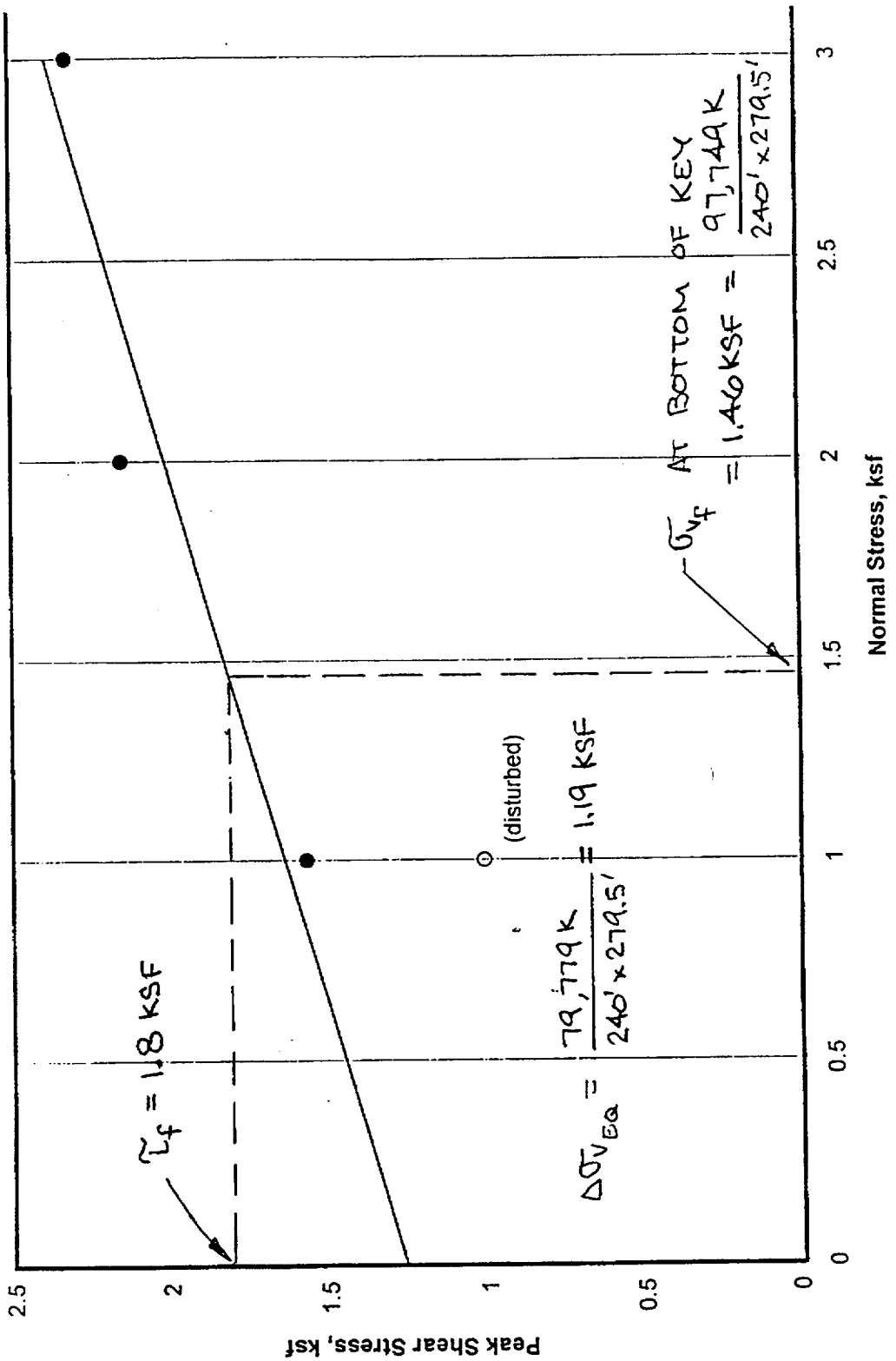

CALCULATION IDENTIFICATION NUMBER				PAGE 53
J.O. OR W.O. NO.	DIVISION & GROUP	CALCULATION NO.	OPTIONAL TASK CODE	
05996.02	G(B)	13-5	N/A	

FIGURE 8
DIRECT SHEAR TEST
Boring CTB-S, Sample U-1AA
CANISTER TRANSFER BUILDING AREA

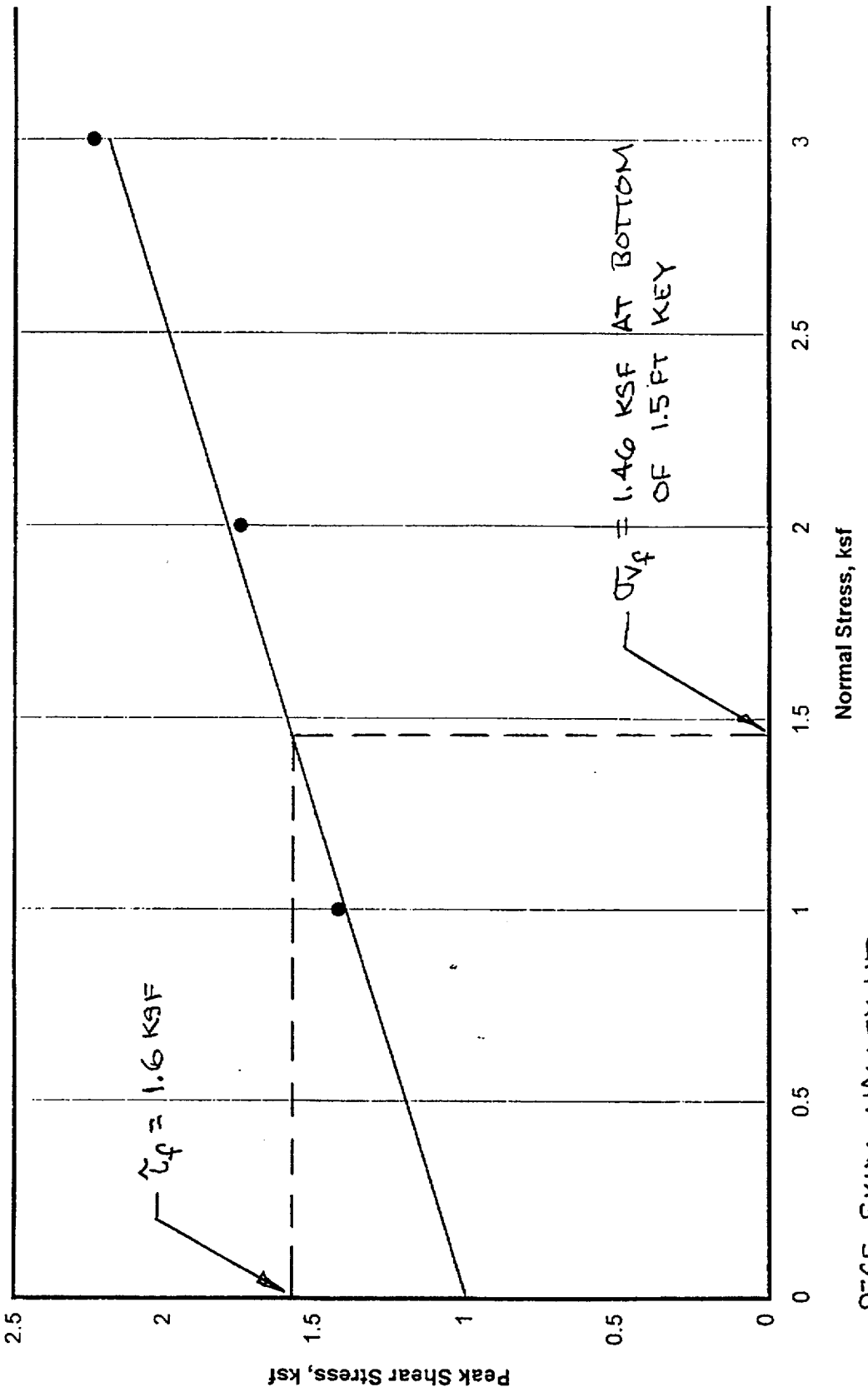

PFSF SKULL VALLEY, UT
SAR APP 2A ATT 7

TABLE 6

SUMMARY OF TRIAXIAL TEST RESULTS FOR SOILS WITHIN ~10 FT OF GROUND SURFACE AT THE SITE

Boring	Sample	Depth ft	Elev ft	w %	ATTERBERG LIMITS LL	PL	PI	USC Code	γ_m pcf	γ_d pcf	e_o	σ_c ksf	s_u ksf	ε_a %	Type	Date
B-1	U-2C	5.9	4453.9	47.1	66.1	33.4	32.7	MH	79.3	53.9	2.15	0.0	2.03	1.7	CU	Nov '99
B-1	U-2B	5.3	4454.5	52.9	80.6	40.9	39.7	MH	70.8	46.3	2.67	1.0	2.21	6.0	CU	Nov '99
B-4	U-3D	10.4	4462.1	27.4	42.5	24.7	17.8	CL	85.5	67.1	1.53	1.3	2.18	4.0	UU	Jan '97
C-2	U-2D	11.1	4453.4	35.6	See U-2C & E[1]			CL	78.5	57.9	1.93	1.3	2.39	11.0	UU	Jan '97
CTB-1	U-3D	8.7	4463.7	47.9	See U-3C[2]			CH	91.9	62.1	1.73	1.7	2.84	5.0	CU	June '99
CTB-4	U-2D	9.5	4465.5	45.2	See U-2E[2]			CH	87.7	60.4	1.81	1.7	3.11	6.0	CU	June '99
CTB-6	U-3D	8.3	4467.9	52.7				CH	85.7	56.2	2.02	1.7	2.70	7.0	CU	June '99
CTB-N	U-1B	5.7	4468.4	30.1	41.3	22.5	18.8	CL	100.6	77.3	1.20	1.7	3.00	8.0	CU	Nov '98
CTB-N	U-2B	7.7	4466.4	65.4	See U-2A[2]			MH	74.6	45.1	2.76	1.7	2.41	13.0	CU	June '99
CTB-N	U-3D	10.5	4463.6	52.2	61.1	30.8	30.3	CH	86.3	56.7	1.98	1.7	2.73	7.0	CU	June '99
CTB-S	U-1B	5.8	4468.7	73.6	66.2	40.9	25.3	MH	78.0	44.9	2.78	1.7	2.05	12.0	CU	Nov '98
CTB-S	U-2D	8.4	4466.1	54.6	57.9	28.9	29.0	CH	90.0	58.2	1.92	1.7	2.40	5.0	CU	June '99
B-1	U-2D	6.5	4453.3	45.2	59.8	34.7	25.1	MH	76.7	52.8	2.22	2.1	3.26	15.0	CU	Mar '99
B-3	U-1B	5.2	4463.0	33.5	52.4	25.2	27.2	MH	90.6	67.9	1.50	2.1	3.55	8.0	CU	Mar '99
C-2	U-1D	6.3	4458.2	50.5	70.3	41.3	29.0	MH	74.5	49.5	2.43	2.1	3.03	12.0	CU	Mar '99

NOTES 1 Attachment 2 of SAR Appendix 2A.
2 Attachment 6 of SAR Appendix 2A.

[geot]\05996\calc\G(B)\05-2\Table_6.xls

ATTACHMENT A p A1/1
TO CALC 05996.02-G(B)-13-5

CONETEC

Stone & Webster

Site: CPT-37
Location: PFSF (05996.02)

Cone: 20 TON A 041
Date: 04:23:99 11:36

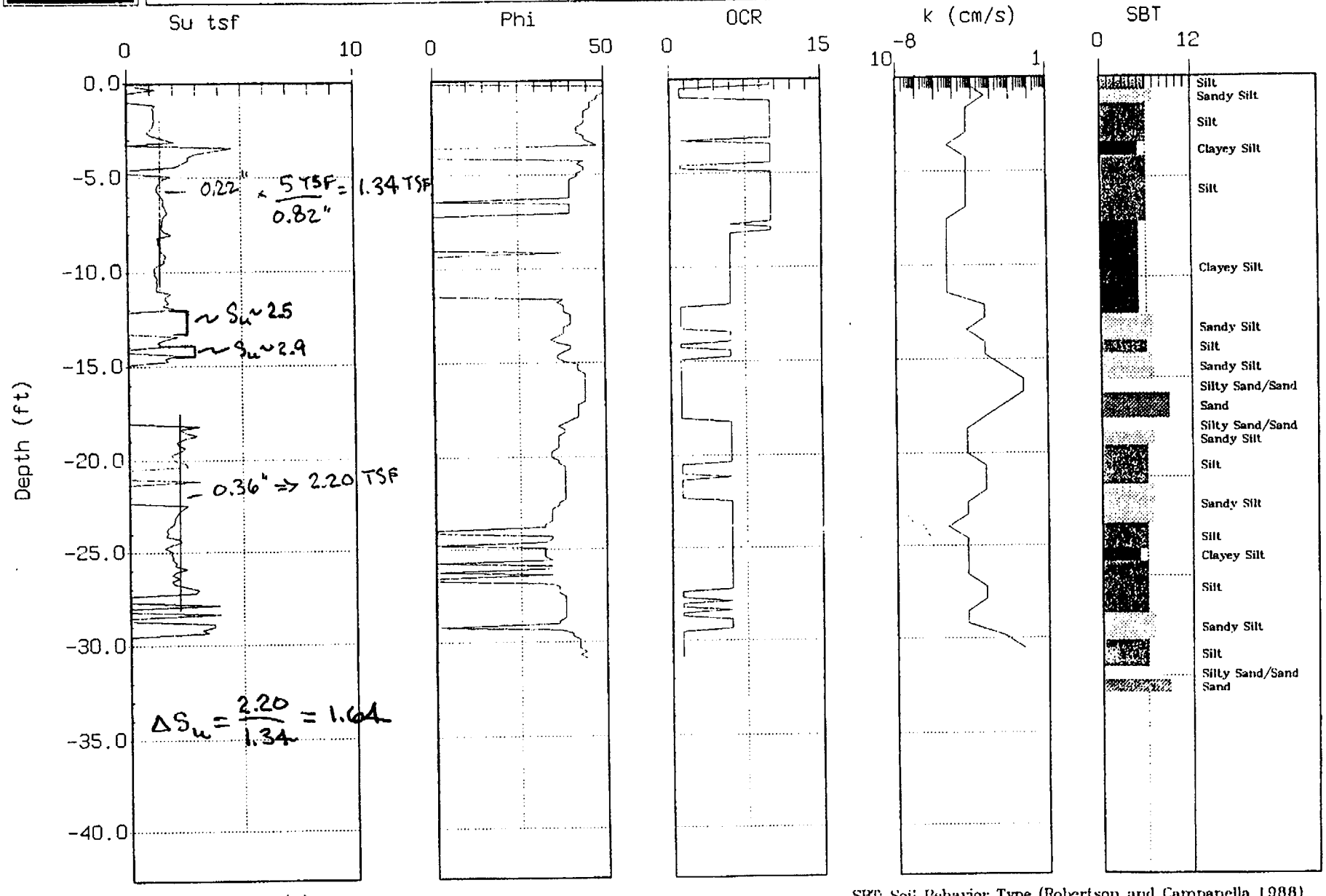

Max. Depth: 30.84 (ft)

Depth Inc.: 0.164 (ft)

Permeability k: estimated from soil type

SBT: Soil Behavior Type (Robertson and Campanella 1988)

(5) FED JUN 2 2000 P.I. Initial

ATTACHMENT B
CALC 05996.02-G(B)-13-5

P B1/2

CONETEC

Stone & Webster

Site: CPT-38
Location: PFSF (0010.0)

Cone: 20 TON A 041
Date: 04:23:99 15:06

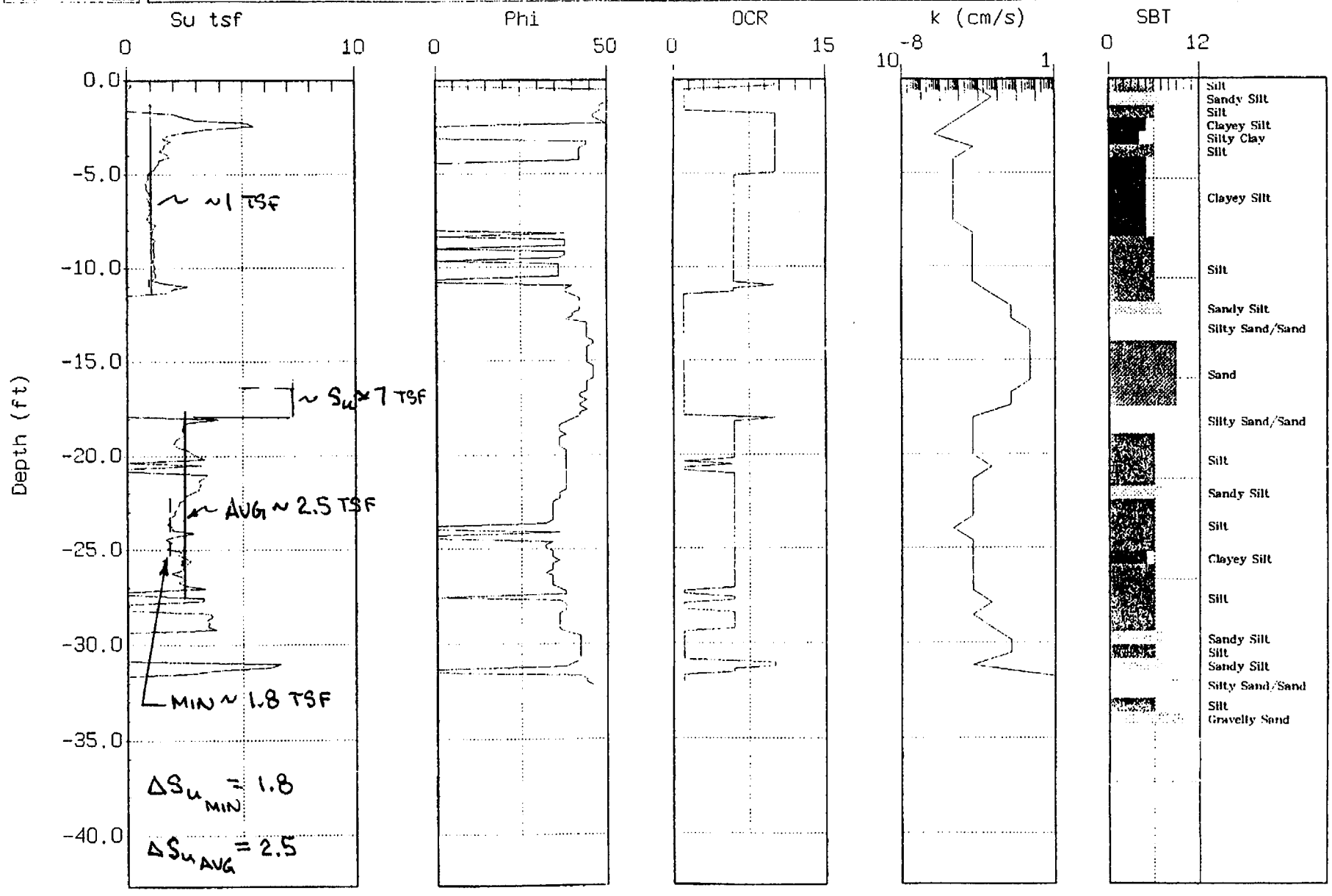

Max. Depth: 32.15 (ft)

Depth Inc.: 0.164 (ft)

Permeability k: estimated from soil type

SBT: Soil Behavior Type (Robertson and Campanella 1988)

ATTACHMENT B
CALC 05996.02-G(B)-13-5
P B2

DIRECT SHEAR TEST

Boring C-2, Sample U-1C

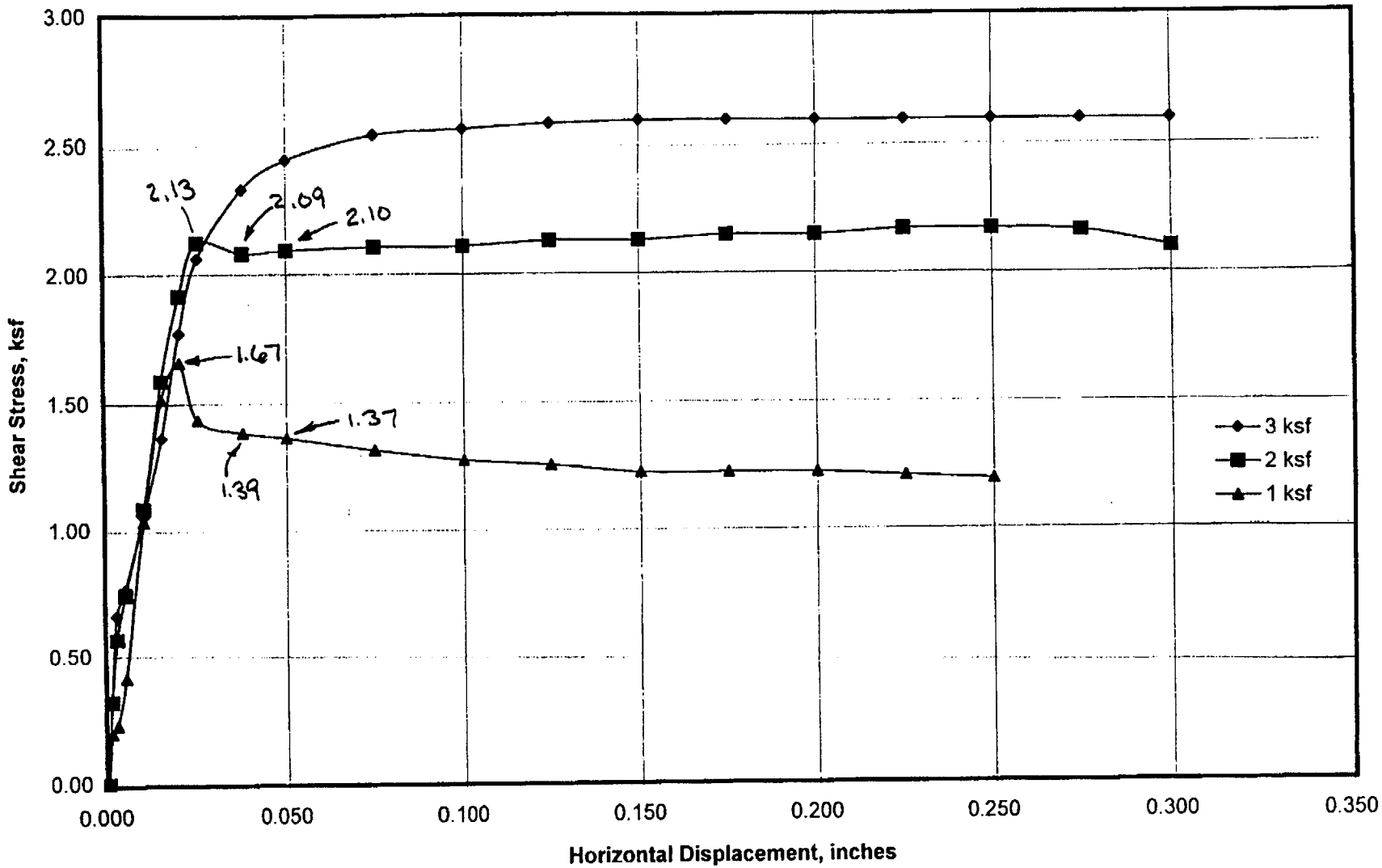

ATTACHMENT C TO CALC 05996.02-G(B)-13-5 p C1/3

DIRECT SHEAR TEST

Boring CTB-6, Sample U-3B&C

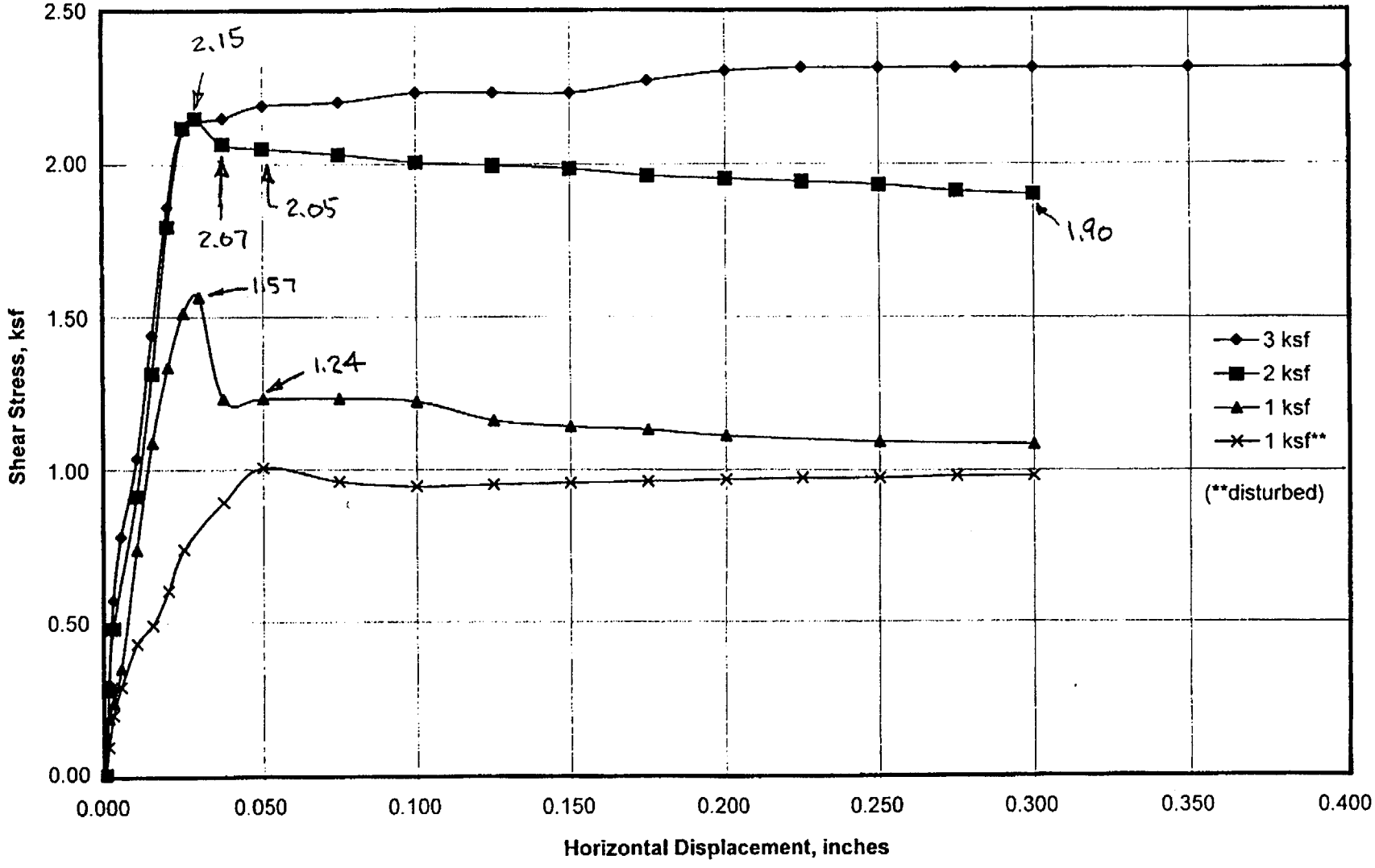

ATTACHMENT C TO CALC 05996.02-G(B)-13-5 p C2

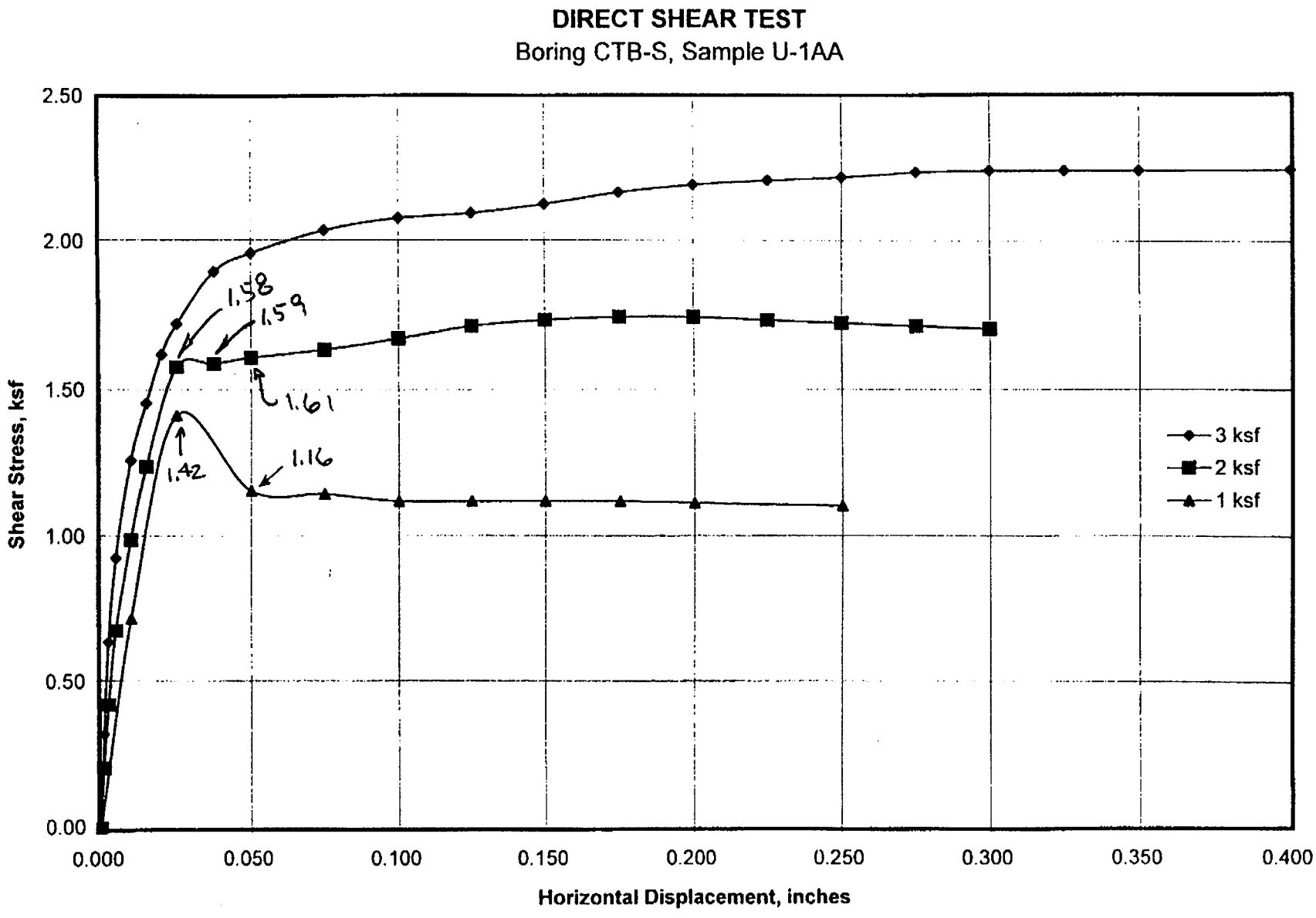

ATTACHMENT D TO CALC 05996.02-G(B)-13-5 p C3