Briefing

Need to point out that the concern was the risk was perceived to be low for decommissioning plants & the Regulations appeared to be very conservative. Question, how might one be relaxed?

MEMORANDUM TO: Chairman Meserve
Commissioner Dicus
Commissioner Diaz
Commissioner McGaffigan
Commissioner Merrifield

FROM: William D. Travers
Executive Director for Operations

SUBJECT: DRAFT FINAL TECHNICAL STUDY ON SPENT FUEL POOL ACCIDENT RISKS AT DECOMMISSIONING NUCLEAR POWER PLANTS

Need Technical why we are doing

In March, 1999, the NRC staff met with the Commission to discuss the ongoing efforts to improve decommissioning regulations. The staff proposed to take a risk-informed look at power reactor decommissioning issues and to use the risk insights derived from this review to guide the promulgation of new regulations. The staff subsequently initiated a technical study on spent fuel pool accident risks at decommissioning plants. The details of this effort are discussed in SECY-99-168, "Improving Decommissioning Regulations for Nuclear Power Plants," dated June 30, 1999.

Preliminary punch line:

Preliminary punch line

A preliminary study was completed in June, 1999, and concluded that several initiating events at decommissioning plants needed additional evaluation because the possibility of a zirconium fire in a spent fuel pool drained of all coolant could not be dismissed. The NRC made substantial efforts to involve public and industry representatives throughout this effort. The NRC solicited feedback on its study assumptions and methods and held numerous public meetings including a 2-day public workshop to discuss the work.

The staff has now completed a review and requantification of its preliminary assessment including independent outside technical review of its analyses and assumptions. Attached for your information is the draft final technical study on spent fuel pool accident risks at decommissioning nuclear power plants. The staff is also issuing this draft final report for public comment at this time. Following resolution of any public comments and review by the ACRS, the staff will publish the final report in May, 2000. The staff will utilize the conclusions in this report to support our integrated decommissioning rulemaking plan to be submitted in June, 2000.

Put Reg Requirements Here

Attachment: Draft Final Study on Spent Fuel Pool Accident Risks at Decommissioning Nuclear Power Plants

cc w/att: SECY
OGC
OCA
OPA
CFO
CIO

At some point you need to relate these conclusions to operating plants - ie availability of borax

Relate to Operating Plants

CONTACT: Tanya Eaton, NRR/DSSA/SPLB
301-415-3610

Information in this record was deleted in accordance with the Freedom of Information Act, exemptions 5
FOIA- 2000-368

MEMORANDUM TO: Chairman Meserve
Commissioner Dicus
Commissioner Diaz
Commissioner McGaffigan
Commissioner Merrifield

FROM: William D. Travers
Executive Director for Operations

SUBJECT: DRAFT FINAL TECHNICAL STUDY ON SPENT FUEL POOL ACCIDENT RISKS AT DECOMMISSIONING NUCLEAR POWER PLANTS

In March, 1999, the NRC staff met with the Commission to discuss the ongoing efforts to improve decommissioning regulations. The staff proposed to take a risk-informed look at power reactor decommissioning issues and to use the risk insights derived from this review to guide the promulgation of new regulations. The staff subsequently initiated a technical study on spent fuel pool accident risks at decommissioning plants. The details of this effort are discussed in SECY-99-168, "Improving Decommissioning Regulations for Nuclear Power Plants," dated June 30, 1999.

A preliminary study was completed in June, 1999, and concluded that several initiating events at decommissioning plants needed additional evaluation because the possibility of a zirconium fire in a spent fuel pool drained of all coolant could not be dismissed. The NRC made substantial efforts to involve public and industry representatives throughout this effort. The NRC solicited feedback on its study assumptions and methods and held numerous public meetings including a 2-day public workshop to discuss the work.

The staff has now completed a review and requantification of its preliminary assessment including independent outside technical review of its analyses and assumptions. Attached for your information is the draft final technical study on spent fuel pool accident risks at decommissioning nuclear power plants. The staff is also issuing this draft final report for public comment at this time. Following resolution of any public comments and review by the ACRS, the staff will publish the final report in May, 2000. The staff will utilize the conclusions in this report to support our integrated decommissioning rulemaking plan to be submitted in June, 2000.

Attachment: Draft Final Study on Spent Fuel Pool Accident Risks at Decommissioning Nuclear Power Plants

cc w/att: SECY OGC OCA OPA CFO CIO

DISTRIBUTION:

File Center	EDO r/f	FMiraglia	SCollins/RZimmerman	MTschiltz
PDIV-D r/f	WHuffman	RDudley	AThadani TEaton	GHubbard
ACRS	BZalcman	MMalloy		

*See previous concurrence

To receive a copy of this document, indicate "C" in the box											
OFFICE	SPLB/SC	C	Tech ED	C	SPLB/BC	C	SRSB/BC	C	SRXB/BC	C	
NAME	GHubbard				JHannon		RBarrett		JWermiel		
DATE											
To receive a copy of this document, indicate "C" in the box											
OFFICE	RGEB/BC	C	IQMB/BC	C	DE	C	DE/D	C	IOLB/BC	C	
NAME	CCarpenter		TQuay		GBagchi		JStrosnider		HChristensen		
DATE											
To receive a copy of this document, indicate "C" in the box											
OFFICE	DSSA/D		PDIV-D/D		DLPM/D		RES		NMSS		
NAME	GHolahan		SRchards		JZwolinski						
DATE											
To receive a copy of this document, indicate "C" in the box											
OFFICE	ADPT/NRR		NRR/D		EDO						
NAME	BSheron		SCollins		WTravers						
DATE											

DOCUMENT NAME: G:\SPLB\SECTIONA\DECOM.GRP\FinalOutput\Tech Rpt Cover Mmo.wpd
OFFICIAL RECORD COPY

DRAFT FOR COMMENT

DRAFT FOR COMMENT

DRAFT FOR COMMENT

Draft Final Technical Study of Spent Fuel Pool Accident Risk at Decommissioning Nuclear Power Plants

February 2000

DRAFT FOR COMMENT

Technical Working Group:

Group Leaders:	Diane Jackson, DSSA/SPLB
	Vonna Ordaz, DSSA/SPLB
	George Hubbard, DSSA/SPLB
	Tanya Eaton, DSSA/SPLB

DRAFT FOR COMMENT

Technical Expertise:

Seismic	Goutam Bagchi, DE
Maintenance Rule	Edward Ford, DIPM/IQMB
Quality Assurance	Ken Heck, DIPM/IQMB
Consequences	Jason Schaperow, RES/DSARE/SMSAB
Safeguards	Robert Skelton, DIPM/IOLB
	Richard Rosano DIPM/IOLB
Fire Protection	Edward Connell, DSSA/SPLB
	Tanya Eaton, DSSA/SPLB
Risk Input	Mark Rubin
	Glenn Kelly, DSSA/SPSB
	Michael Cheok, DSSA/SPSB
Human Reliability	Gareth Parry, DSSA
Criticality	Larry Kopp, DSSA/SRXB
	Anthony Ulses, DSSA/SRXB
Thermal Hydraulics	Joseph Staudenmeier, DSSA/SRXB
	Christopher Boyd, RES/DSARE/SMSAB
Heavy Loads	Edward Throm, DSSA/SPSB
	Brian Thomas, DSSA/SPLB
SFP Operations	Christopher Gratton, DSSA/SPLB
EP	James O'Brien, DIPM/IOLB
	Roger Pederson, DIPM/IOLB

Spell out

DRAFT FOR COMMENT

DRAFT FOR COMMENT

Technical Study of Spent Fuel Pool Accidents for Decommissioning Plants

DRAFT FOR COMMENT

Table of Contents

Executive Summary 1

Introduction 3

2.0 Risk Informed Decision Making 4
- 2.1 Principles of Regulatory Guide 1.174 5
  - 2.1.1 Defense-in-Depth 6
  - 2.1.2 Safety Margins 6
  - 2.1.3 Impact of Proposed Changes 7
  - 2.1.4 Implementation and Monitoring Program 7

3.0 Risk Assessment of Spent Fuel Pools at Decommissioning Plants 7
- 3.1 Basis and Findings of SFP Risk Assessment 9
- 3.2 Characteristics of SFP Design and Operations for a Decommissioning Plant 10
- 3.3 Internal Event Scenarios Leading to Fuel Uncovery 15
  - 3.3.1 Loss of Cooling 15
  - 3.3.2 Loss of Coolant Inventory 16
  - 3.3.3 Loss of Offsite Power from Plant-Centered and Grid Related Events 17
  - 3.3.4 Loss of Offsite Power from Severe Weather Events 18
  - 3.3.5 Internal Fire 18
  - 3.3.6 Heavy Load Drops 18
- 3.4 Beyond Design Basis Spent Fuel Pool Accident Scenarios (External Events) 20
  - 3.4.1 Seismic Events 20
  - 3.4.2 Aircraft 21
  - 3.4.3 Tornadoes 23
  - 3.4.4 Criticality in Spent Fuel Pool 23

4.0 Implications of Spent Fuel Pool Risk For Regulatory Requirements 25
- 4.1. Summary of the Technical Results 26
- 4.2 Risk Impact of Specific Design and Operational Characteristics 27
- 4.3. Implications for Regulatory Requirements Related to Emergency Preparedness, Security and Insurance 31
  - 4.3.1 Emergency Preparedness 31
  - 4.3.2 Security 32
  - 4.3.3 Insurance 34

5.0 Summary and Conclusions 35

6.0 References 36

7.0 Acronyms 38

Sabotage? Discussion? yes

Appendix 1 Thermal Hydraulics A1-1

Appendix 2b Structural Integrity of Spent Fuel Pools Subject to Seismic Loads A2-4

Appendix 2c Structural Integrity of Spent Fuel Pool Structures Subject to Heavy Loads Drops A2-8

Appendix 2d Structural Integrity of Spent Fuel Pool Structures Subject to Aircraft Crashes A2-20

Appendix 2e Structural Integrity of Spent Fuel Pool Structures Subject to Tornados and High Winds A5-27

Appendix 3 Criticality A3-1

Appendix 4 Consequence Assessment from Zirconium Fire A4-1

Appendix 5 Enhanced Seismic Check List and Supporting Stakeholder Documentation .. A5-1

Appendix 6 November 12, 1999 Nuclear Energy Institute Commitment Letter A6-1

Appendix 7 Stakeholder Interactions A7-1

DRAFT FOR COMMENT

List of Tables

Table 3.1 Spent Fuel Pool Cooling Risk Analysis Frequency of Fuel Uncovery (per year).....13

List of Figures

Figure 3.1 Assumed Spent Fuel Pool Cooling System.....11

Formatted Version, Rev. 5 1/19/00 1600 hours

Executive Summary

This report documents an evaluation of spent fuel pool accident risk at decommissioning plants. It was done to provide an interim, risk-informed technical basis for reviewing exemption requests, and to provide a regulatory framework for integrated rulemaking. The application of this report is intended to reduce unnecessary regulatory burden, improve efficiency and effectiveness, and establish a consistent, predictable process that will ~~maintain safety and~~ enhance public confidence. The report was initiated when industry asked the NRC to consider whether the risk from decommissioning plants was low enough to justify generic regulatory relief in the areas of emergency planning, indemnification and safeguards.

In the past, decommissioning plants have requested exemptions to certain regulations as a result of their permanently defueled condition. When evaluating the acceptability of exemption requests from regulations for permanently shutdown plants, the staff has assessed the susceptibility of the spent fuel to a zirconium fire accident. To date, exemptions have been granted on a plant-specific basis, resulting in different analyses and criteria being used for the basis of the exemptions. In some cases, we have requested heatup evaluations of the spent fuel cooled only by air. This criterion was used because of national laboratory studies that had identified the potential concern for a significant offsite radiological release from a zirconium fire which ~~may~~ occur when all water is lost from the spent fuel pool. A clad temperature of 565 °C, based on the onset of clad swelling, was used as a conservative limit to ensure no radiological release.

In March, 1999, the staff formed a technical working group to evaluate spent fuel pool accident risk at decommissioning plants. A two month effort was launched to review the available technical information and methods and identify areas in need of further work. A substantial effort was made to involve public and industry representatives throughout the entire effort. A series of public meetings was held with stakeholders during and following the generation of a preliminary draft study that was published in June at the request of the Nuclear Energy Institute (NEI). The partially completed DRAFT report was released to facilitate ~~an industry~~/NRC/~~public~~ Two day workshop that was held in July, 1999. Information gained at the workshop and through other stakeholder interactions was constructive in completing the report.

Estimates of the risk from heavy load handling accidents were revised and criticality concerns were addressed in response to stakeholder feedback. A checklist was developed to establish seismic capability of SFPs, and industry commitments were documented to address the vulnerabilities that had been identified by the June, 1999 draft report. Independent technical quality reviews of controversial aspects of the report were initiated to bring in outside expert opinion on the details of the report. These experts evaluated several areas of the report, including the human reliability analysis, seismic considerations, thermal-hydraulic calculations, and PRA assumptions and treatment. The PRA results were requantified to take into account the industry commitments to reduce risk vulnerabilities.

This report contains the results of our effort. It includes three main outputs. The first is a discussion in Chapter 2 on how risk-informed decision making is being applied to

decommissioning plants. The second is a summary of the risk assessment of SFPs at decommissioning plants in Chapter 3. The third provides the implications of SFP risk on regulatory requirements in Chapter 4, and outlines where an industry initiative may be useful in improving the generic study.

Spent fuel

As described in Chapter 2, a pool performance guideline (PPG) for frequency of zirconium fires has been developed and proposed based upon the numerical guidelines incorporating large release frequency (LERF) as described in Regulatory Guide (RG) 1.174 [Ref. 1]. In a letter dated November 12, 1999 [Ref. 2], the ACRS suggested that the end state of uncovery of top of fuel was an appropriate PRA surrogate for zirconium fire frequency, and that comparison with LERF would be acceptable for risk-informed decision making, even though the correlation is not perfect.

spent fuel

The risk estimates contained in Chapter 3 demonstrate that a zirconium fire can occur during an extended period after shutdown (up to five years), depending on fuel burnup and rack configurations, if fuel uncovery were to occur. The consequences of such an event would be severe. However, the requantified PRA demonstrates that if operation of the decommissioned plant is carried out in accordance with the commitments proposed by the industry and the other constraints outlined in this report are followed, such as the seismic check list, then the pool performance guideline frequency of less than 1×10^{-6} per year can be met.

Large release

Chapter 4 points out that when the numerical risk analysis results and other safety principles as described in RG 1.174 are taken into account, such as defense in depth, maintaining safety margins, and performance monitoring, the staff has concluded that after one year following final shutdown, there is reasonable assurance that a zirconium fire will not occur such that the emergency planning requirements can be relaxed to a minimum baseline level. Any future reduction of the one year critical decay time would be contingent on plant specific thermal hydraulic response, scenario timing, human reliability results and system mitigation and recovery capabilities. That is, any licensee wishing to gain relief from the EP requirements prior to one year post-shutdown would need to demonstrate that plant specific vulnerability to a zirconium fire satisfies the risk-informed decision process, risk insights and recommended criteria described in Chapters 2 and 3. Chapter 4 also covers the need for continued indemnification requirements while the threat of a zirconium fire exists, and offers the possibility that an industry initiative to improve the thermal-hydraulic calculational methodology could result in shortening the generic 5 year window of vulnerability. Finally, Chapter 4 includes a discussion on how the risk insights contained in this report can by employed to assess the vulnerabilities to sabotage, and concludes that any reduction in security provisions would be constrained by the target set, such that some level of security is required as long as the fuel in the SFP is exposed to a sabotage threat.

What does this mean

How do you satisfy risk insight (consistent with

Technical

In summary, this report provides the basis for determining the regulatory requirements for decommissioning plants using risk-informed decision making. It recognizes that some aspects of the regulations such as 10 CFR 20 [Ref. 3] are not amenable to this kind of analysis. However, it provides an authoritative and definitive treatment of SFP risk at decommissioning plants as it relates to emergency planning, insurance, and security requirements, and can be

(s)?

extrapolated to other appropriate areas of consideration such as shift staffing and fitness for duty. And finally, it points out other areas of consideration for bringing coherency to future rulemaking.

1. Introduction

The current body of NRC regulations pertaining to light-water reactors (10 CFR 50) [Ref. 1] is primarily directed towards the safety of operating units. As some reactors have reached a permanent shutdown condition and entered decommissioning status, industry and the NRC have been faced with establishing the appropriate requirements and regulatory oversight necessary to provide adequate protection to the public.

Decommissioning plants have requested exemptions to certain regulations as a result of their permanently defueled condition. Areas where regulatory relief has been requested in the past include exemptions from offsite emergency planning (EP) requirements, Price Anderson Insurance provisions and physical security. Requests for consideration of changes in regulatory requirements are appropriate since the traditional accident sequences that dominate operating reactor risk are no longer applicable. For a defueled reactor in decommissioning status, public risk is predominantly from accidents involving spent fuel. These fuel assemblies can be stored in the spent fuel pool for considerable periods of time, as remaining portions of the plant continue through decommissioning and disassembly. To date, exemptions have been requested and granted on a plant-specific basis. This has resulted in some lack of consistency and uniformity in the scope of evaluations conducted and acceptance criteria applied in processing the exemption requests.

To improve regulatory consistency and predictability, the NRC has undertaken this effort to develop a regulatory framework applicable to decommissioning plants. This framework will utilize risk informed approaches to identify the design and operational features necessary to ensure that risks to the public from these shutdown facilities are sufficiently small. This framework will form the foundation upon which regulatory changes will be developed, as well as the basis for requesting and approving exemption requests in the interim, until the necessary rulemaking is completed.

In support of this objective, the NRC staff has completed a draft assessment of spent fuel pool risks. This assessment utilized probabilistic risk assessment (PRA) methods (applying both quantitative and qualitative insights) and was developed from analytical studies in the areas of thermal hydraulics, core physics, systems analysis, human reliability analysis, seismic and structural analysis and external hazards assessment. The focus of the risk assessment was to identify potential accident scenarios at decommissioning plants, and to estimate the likelihood and consequences of these scenarios. Of primary concern are events that lead to loss of spent fuel pool water inventory or loss of cooling to the spent fuel assemblies, and events that result in fuel configurations that could lead to criticality conditions. For some period after reactor shutdown and upon loss of inventory or cooling, it is possible for the fuel to heat up to the point where rapid oxidation and burning of the fuel cladding occurs leading to significant releases of radionuclides.

A preliminary version of this draft report was issued for public comment and technical review in June 1999. Comments received from stakeholders and other technical reviewers have been considered in preparing the present assessment. Quality assessment of the staff's preliminary

Editorial

analysis has been aided by a small panel of HRA experts who evaluated the human performance analysis assumptions, methods and modeling, as well as a broad quality review carried out at the Idaho National Engineering & Environmental Laboratory (INEEL).

The conclusions and findings of the study provide guidance for the design and operation of spent fuel pool cooling and inventory make-up systems as well as practices and procedures necessary to ensure high levels of operator performance during off-normal conditions. This report concludes that with the imposition of voluntary industry initiatives and some additional staff requirements, the risks from spent fuel pools will be sufficiently small to justify exemptions from selected current regulatory requirements and to form the basis for related rulemaking.

This report contains is divided into three main parts. The first part is a discussion in Chapter 2 on how risk informed decision making can be applied to decommissioning plants. In Chapter 3, the staff presents the risk assessment conducted on the SFPs for decommissioning plants. In Chapter 4 of this report, the findings of SFP risk for a decommissioning plant ~~will be~~ are assessed against each of the safety principles and objectives discussed above.

2.0 Risk-Informed Decision Making

The regulatory framework developed for decommissioning plants is based on a risk-informed process. In 1995, the NRC published its PRA policy statement [Ref 1], which stated that the use of PRA technology should be increased in all regulatory matters to the extent supported by the state-of-the-art of the methods. Probabilistic risk assessment provides a structured analytical method to assess the various combinations of failures and events that result in undesirable consequences, for example such as core damage in an operating reactor. Related aspects of these methods can go on to assess the timing and mode of containment failure, radioactive releases to the environment and postulated health effects.

Subsequent to issuance of the PRA Policy Statement, the agency published Regulatory Guide (RG) 1.174 [Ref.2] which contained general guidance and criteria for application of PRA to the regulation of nuclear reactors. The criteria in RG 1.174 pertain to the frequency of core damage accidents (CDF) and large early releases (LERF). For both CDF and LERF, RG 1.174 contains guidance on acceptable values for the changes that can be allowed due to regulatory decisions as a function of the baseline frequencies. For example, if the baseline CDF for a plant is below 1E-4 per year, plant changes can be approved which increase CDF by up to 1E-5 per year. If the baseline LERF is less than 1E-5 per year, plant changes can be approved which increase LERF by 1E-6 per year.

For decommissioning plants, the risk is due primarily to the possibility of a zirconium fire associated with the spent fuel rod cladding[1]. The consequences of such an event do not equate

[1]See chapter 3 for more complete discussion of fuel pool risk scenarios

True for seismic? yes

exactly to either a core damage accident or a large early release[2]. Zirconium fires in spent fuel pools potentially have more severe consequences than an operating reactor core damage accident, because there are multiple cores involved, and because there is no containment surrounding the SFP to mitigate the consequences. On the other hand, they are somewhat different than a large early release, because the accidents progress slowly enough to allow ample warning for offsite protective actions, and because the absence of iodine isotopes leads to fewer prompt fatalities. As a result, the criteria of RG 1.174 cannot be applied directly to the risk of a decommissioning plant ~~without further thought.~~

from

they (from)

Even though the event progresses more slowly than an operating reactor Large Early Release event and the isotopic makeup is somewhat different, the risk assessment consequence calculations performed by the staff[3] show that large inventories of radioisotopes could be released that could have significant late health effects (latent cancers) for the population at some distance from the plant, as well as the potential for a small number of early health effects (fatalities). The staff has therefore decided that the end state and consequences of a spent fuel pool fire are sufficiently severe that the RG 1.174 LERF baseline criteria of 1E-5 per year (the value of baseline risk above which the staff will only consider very small increases in risk) provides an appropriate frequency criteria for a decommissioning plant SFP risk, and a useful tool to assess features, systems and operator performance needs of a ~~decommissioning pool.~~ spent fuel pool in a decom. plant. The staff therefore proposes this as the recommended pool performance guideline (PPG) for baseline zirconium fire frequency. ~~The additional RG 1.174 recommended criteria of a LERF change not to exceed 1E-6 per year, is also an appropriate measure to assess proposed changes to regulatory requirements on a decommissioning plant that are amenable to and result in increases to large release frequency.~~ ???

did the reg guide only "recommend" it? acceptable guideline

2.1 Principles of Regulatory Guide 1.174

As discussed in RG 1.174, the results of quantitative risk assessments are only one tool utilized in risk informed decision making. RG 1.174 articulates the following safety principles which should be applied to the decommissioning case:

- The proposed change meets the current regulations unless it is explicitly related to a requested exemption or rule change, i.e., a "specific exemption" under 10 CFR 50.12 or a "petition for rulemaking" under 10 CFR 2.802.
- The proposed change is consistent with the defense-in-depth philosophy.
- The proposed change maintains sufficient safety margins.

But these all refer to a "change" what are we changing?

---

[2]RG 1.174 describes LERF as the frequency of unmittaged releases that have the potential for early health effects, in a time frame prior to effective evacuation of close-in population

[3]See Appendix 4 for consequence and health impact assessment

- When proposed changes result in an increase in core damage frequency and/or risk, the increases should be small and consistent with the intent of the Commission's Safety Goal Policy Statement

- The impact of the proposed change should be monitored using performance measurement strategies.

While the focus on RG 1.174 was decision-making regarding changes to the licensing basis of an operating plant, the same risk-informed philosophy can be applied to rulemaking for decommissioning plants or to consider potential exemptions to current requirements. The intent and scope of these safety principles are discussed below. However, since the application of this study specifically relates to exemptions to a rule or a rule change for decommissioning plants, a discussion of the first principle regarding current regulations is not necessary nor is it provided. A discussion on how these principles are satisfied as demonstrated by the staff's safety assessment is provided in Chapter 4.

2.1.1 Defense-in-Depth

The defense-in-depth philosophy applies to the operation of the spent fuel pool, whether at an operating plant or in a decommissioning plant. In accordance to the Commission White Paper on Risk-Informed Regulation (March 11, 1999), "Defense-in-depth is an element of the NRC's Safety Philosophy that employs successive compensatory measures to prevent accidents or mitigate damage if a malfunction, accident, or naturally caused event occurs at a nuclear facility. The defense-in-depth philosophy ensures that safety will not be wholly dependent on any single element of the design, construction, maintenance, or operation of a nuclear facility. The net effect of incorporating defense-in-depth into design, construction, maintenance and operation is that the facility or system in question tends to be more tolerant of failures and external challenges.

Therefore, application of dense-in depth could mean that there is more than one source of cooling water or that pump makeup can be provided by both electric as well as direct drive diesel pumps. Additionally, defense in depth can mean that even if a serious outcome (such as fuel damage) occurs, there is further protection such as containment to prevent radionuclide releases to the public. However, implementation of defense in depth for SFPs is different from that applied to nuclear reactors because of the different nature of the hazards. Because the essentially quiescent (low temperature, low pressure) initial state of the spent fuel pool and the long time available for taking corrective action associated with most release scenarios provide significant safety margin, a containment structure is not considered necessary as an additional barrier to provide an adequate level of protection to the public. Likewise, the long evolution of most SFP accident scenarios allows for reasonable human recovery actions to respond to system failures. The specific design and operational features of the SFP, industry commitments and staff requirements that ensure that SFP defense in depth is maintained, is provided in Chapter 4.

2.1.2 Safety Margins

A safety margin can relate to the difference between the expected value of some physical parameter (temperature, pressure, stress, reactivity) and the point at which adequate performance is no longer assured. For example a containment pressure calculation that shows a peak accident pressure of 40 psig is reached for a structure which has a design capability of 60 psig and an actual ultimate capability of 110 psig. In this case there is margin from the accident calculation of 20 psig to the design limit as well as a large margin of 70 psig to the actual expected failure limit.

The safety margins associated with fuel in the spent fuel pool for many physical processes and parameters are much greater than those associated with an operating reactor. The spent fuel pool is in a quiescent state, at or near ambient temperature and pressure. The decay heat levels are much lower than those of the fuel in an operating reactor. This allows much greater time for heating and boil off of the coolant water, and for heat up of the fuel itself, once uncovered. The fuel is covered with approximately 28 feet of water at near ambient temperature. The pool is designed with ample margin to criticality, using both passive (geometry) and active (poisons) means of reactivity control. Chapter 4 describes how the provisions that ensure the SFP maintains adequate margins in a decommissioning plant.

2.1.3 Impact of Proposed Changes

The impact of the proposed change should be small. As discussed above, the staff is applying the pool performance guideline (PPG) of 1×10^{-5} per year frequency for zirconium fire; which was developed from the treatment for LERF in RG 1.174. This PPG is used to assess the impact and acceptability of SFP risk in decommissioning plants. Chapters 3 and 4 discusses the design and operational characteristics of the SFP that must be relied upon to produce the low baseline risk results. These are identified in the context of industry commitments as well as additional staff requirements.

2.1.4 Implementation and Monitoring Program

RG 1.174 states that an implementation and monitoring plan should be developed to ensure that the engineering evaluation conducted to examine the impact of the proposed changes continues to reflect the actual reliability and availability of structures, systems, and components (SSCs) that have been evaluated. This will ensure that the conclusions that have been drawn will remain valid.

Therefore, with respect to all the above safety principles, implementation and monitoring of important considerations might include comparing a check list against the spent fuel pool seismic design and construction, control of heavy load movements, development and implementation of procedures and other provisions to ensure human reliability, monitoring the capability, reliability, and availability of important equipment, and checking effectiveness of onsite emergency response and the plans for communication with offsite authorities. In many areas the implementation and monitoring may already be accomplished by utility programs such as those developed under the maintenance rule [Ref. 3]. Chapter 4 discusses the additional

implementation and monitoring activities that are necessary to achieve the low SFP risk estimates of this report and support the safety principles.

3.0 Risk Assessment of Spent Fuel Pools at Decommissioning Plants

As discussed in Section 1 of this paper, the risks and vulnerabilities from a decommissioning plant are very different from an operating ~~reactor~~ plant. Once fuel is permanently removed from the reactor vessel, the primary public risk in a decommissioning facility is associated with the spent fuel pool. The spent fuel assemblies are retained in the storage pool, and are submerged in water both to provide cooling of the fuel's remaining decay heat as well as to provide shielding for the radioactive assemblies. The most severe accidents postulated for SFPs are associated with the loss of water (either through boil off or draining) from the pool.

Depending on the time since reactor shutdown and fuel rack configurations, there may be sufficient heat to cause the clad to heat up, swell and burst. The breach in the clad could result in the release of radioactive gases present in the gap between the fuel and clad, called "a gap release" (See Appendix 1). If the fuel continues to heat up, the temperature of the zirconium clad will reach the point of rapid oxidation in air. This reaction of zirconium and air is exothermic. The energy released from the reactor combined with the decay energy can cause the reaction to become self-sustaining and lead to the ignition of the zirconium, or a "zirconium fire." The increase in heat from the oxidation reaction could also raise the temperature in adjacent fuel assemblies and cause the propagation of the oxidation reaction. This zirconium fire will result in a significant release of the fission products contained in the spent fuel, which will be dispersed from the reactor site due to the thermal plume from the zirconium fire. Consequence assessments (Appendix 4) have shown that such a zirconium fire could have significant latent health effects (cancers) as well as the possibility of a small number of early fatalities. Gap releases for fuel ~~of a year or more post shutdown in and by themselves (without zirconium fire)~~ release only moderately small quantities of radionuclides and would only be of concern for onsite effects.

Based upon the preceding insights the staff conducted its risk evaluation to focus on the likelihood of scenarios that could result in loss of pool water and fuel heat up to the point of rapid oxidation. Since the decay time at which air cooling alone is sufficient to prevent zirconium fire is very plant specific, the cut off time (when a zirconium fire can no longer occur) for this risk assessment cannot be pre-determined. Rather, the insights should be considered as generally applicable to a decommissioning plant until it reaches a point where rapid oxidation will not occur with complete loss of water. After a decay period that precludes fuel heat up to zirconium fire conditions, no significant risk remains from storage of the spent fuel. Preliminary calculations by the staff (see Appendix 1) show this time will vary depending on fuel burn up, SFP storage configuration and loading pattern of the assemblies, and could occur at a period as long as five years from plant shutdown.

In order to support the risk evaluation, the staff conducted a thermal hydraulic assessment of the SFP for various scenarios such as loss of pool cooling and loss of inventory. These calculations provided information on heat up and boil off rates for the pool, as well as heat up rates for the

uncovered fuel assemblies and timing to initiation of zirconium fire for a number of scenarios and sequences. The results of these calculations provided fundamental information on the timing of accident sequences and provided insights on the time available to recover from events and time available to initiate offsite measures, if necessary. This information was then utilized in the risk assessment to support the human reliability analysis used to assess the likelihood of recovering level or cooling before a zirconium fire occurs.

For these calculations, the end state assumed for the accident sequences was when the water level reached the top of the fuel assemblies, rather than calculating the temperature response of the fuel as the level gradually drops. This simplification was utilized because of the extremely complex heat transfer mechanisms and chemical reactions occurring in the fuel assemblies. This analytical approach understates the time that is available for possible operator recovery of SFP events prior to initiation of zirconium fire. However, since the recoverable events such as small loss of inventory or loss of power/pool cooling, are very slowly evolving events, many days are generally available for recovery whether top of fuel uncovery is the end point of the analysis, or is total fuel uncovery. The extra time available (estimated to be in the tens of hours) as the water level boils down the assemblies, would not impact the very high probabilities of operator recovery from these events given the industry commitments and additional staff requirements. In its letter of November 12, 1999 [Ref. 1], the Advisory Committee on Reactor Safeguards (ACRS) recommended that the end state of top of fuel uncoverey be used for the SFP analysis along with application of the LERF criteria discussed in Chapter 2. The staff agrees with this recommendation. However, there are some exceptions noted in our response to the ACRS. The details of the staff thermal hydraulic assessment are provided in Appendix 1.

Previous to the staff's preliminary risk assessment, the most extensive work to date was in support of Generic Safety Issue (GSI) 82, "Beyond Design Basis Accidents for Spent Fuel Pools" [Ref. 2]. This report assessed the risk for operating reactors and concluded that a seismic event was the dominant initiating event for the loss of inventory.

While the staff drew from the GSI 82 work in its assessment, it was concluded that because of significant differences between operating and decommissioning plant spent fuel pools cooling systems, a complete assessment of SFP risk should be conducted, considering all potentially significant initiators, and reflecting the unique features found in a shutdown facility. The results of the staff assessments are discussed below. A summary of industry commitments, staff recommendations (relied upon in the risk assessment) and a discussion of how the decision criteria in Chapter 2 are satisfied is discussed in Chapters 3 and 4. Conclusions on how the SFP risk insights and decision criteria apply to potential changes in emergency planning, insurance, and physical security are also discussed in Chapter 4.

3.1 Basis and Findings of SFP Risk Assessment

In order to follow the framework for the regulatory decision process described in Chapter 1, a comprehensive assessment of SFP risk was necessary. To gather information on SFP design and operational characteristics for the preliminary risk assessment done for the June 1999 draft report, the staff conducted site visits to four decommissioning plants to ascertain what would be

in power operation.

an appropriate model for decommissioning spent fuel pools. The site visits confirmed that the as operated spent fuel pool cooling systems were very different than those in operation when the plants were ~~operating reactors~~. Modeling information was determined from both site system walkdowns as well as limited discussions with the decommissioning plant staff. Since limited information was available for the preliminary assessment on procedural and recovery activities as well as what the minimum configuration a decommissioning plant might have, a number of assumptions and bounding conditions were assumed for the June 1999 preliminary study. These preliminary results have been refined in this draft assessment after obtaining improved information from industry on SFP design and operating characteristics for a decommissioning plant, as well as a number of commitments that contribute to achieving low risk findings from SFP incidents. These revised results also reflect improvements in the PRA model since publication of the June 1999 report.

The staff identified the following nine initiating event categories to investigate as part of the quantitative risk assessment on SFP risk:

- Loss of Offsite Power from plant centered and grid related events
- Loss of Offsite Power from events initiated by severe weather
- Internal Fire
- Loss of Pool Cooling
- Loss of Coolant Inventory
- Seismic Event
- Cask Drop
- Aircraft Impact
- Tornado Missile

In addition a qualitative risk perspective was developed for inadvertent re-criticality in the SFP.

The risk model, as developed by the staff, and supplemented through a quality review from Idaho National Engineering & Environmental Laboratory (INEEL), is provided in Appendix 2. Appendix 2 includes the modeling details for the cask drop, aircraft impacts, seismic and tornado missile assessments. Input and comments from stakeholders ~~was~~ also utilized in updating the June 1999 preliminary model to the present draft model. were

3.2 Characteristics of SFP Design and Operations for a Decommissioning Plant

Based upon information gathered from the site visits and interactions with NEI and other stakeholders, the staff has modeled the spent fuel pool cooling system (SFPC) (see Figure 3.1 on next page) as being located in the spent fuel pool (SFP) area and consisting of motor-driven pumps, a heat exchanger, an ultimate heat sink, a makeup tank, filtration system and isolation valves.

Suction is taken via one of the two pumps on the primary side from the spent fuel pool and is passed through the heat exchanger and returned back to the pool. One of the two pumps on the secondary side rejects the heat to the ultimate heat sink. A small amount of water from the

suction line is diverted to the filtration process and is returned back into the discharge line. A manually operated makeup system (limited volumetric flow rate) supplements the small losses due to evaporation. In the case of prolonged loss of SFPC system or loss of inventory events, the inventory in the pool can be made up using the firewater system. There are two firewater pumps, one motor-driven (electric) and one diesel-driven, which provide firewater in the SFP area. A firewater hose station is provided in the SFP area. The firewater pumps are located in a separate structure.

Based upon information obtained during the site visits and discussions with the operating ~~staffs~~ personnel during those visits, the staff also made the following assumptions that are believed to be representative of a typical decommissioning facility:

- The site has two operable firewater pumps, one diesel-driven and one electrically-driven from offsite power.
- ~~We assume~~ the makeup capacity (with respect to volumetric flow) is assumed to be as follows:

Make-up pump:	20 - 30 gpm
Firewater pump:	100 - 200 gpm
Fire engine:	100 - 250 gpm [depending on hose size: 1-½" (100 gpm) or 2-½" (250 gpm)]

  We therefore assumed that for the larger loss-of-coolant inventory accidents, water addition through the makeup pumps does not successfully mitigate the loss of inventory event unless the ~~source~~ Location of inventory loss is isolated.
- The fuel handlers perform walkdowns of the SFP area once per shift (8- to 12-hour shifts). A different crew member is assumed for the next shift. We also assumed that the SFP water is clear and pool level is observable via a measuring stick in the pool that can alert fuel handlers to level changes.

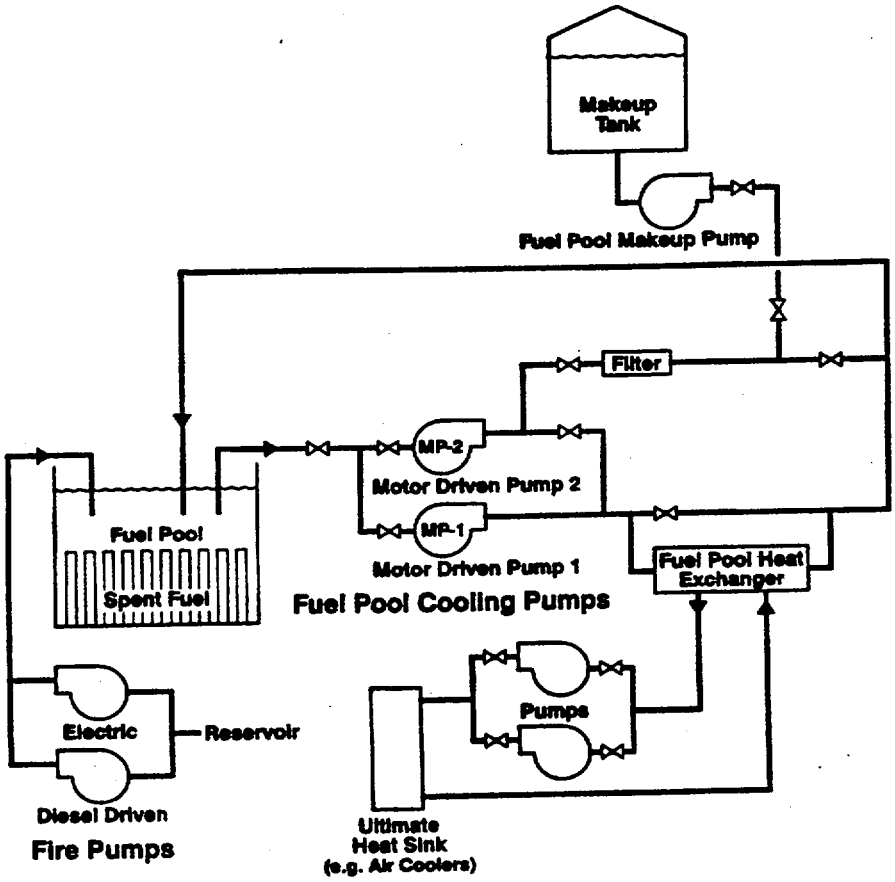

Figure 3.1 Assumed Spent Fuel Pool Cooling System

Based upon the results of the June 1999 preliminary risk analysis and its associated sensitivity cases, it became clear that many of the risk sequences were quite sensitive to the performance of the SFP operating staff in identifying and responding to off normal conditions. This is due to the fact that the remaining systems in the SFP Island are relatively simple with manual rather than automatic initiation of backups or realignments. Therefore, if scenarios such as loss of cooling or inventory loss to the pool occurs operator response to diagnose the failures and bring on site and off site resources to bear are instrumental for ensuring that the fuel assemblies remain cooled and a zirconium fire is prevented.

As part of its technical evaluations the staff assembled a small panel of experts which identified the attributes necessary to achieving very high levels of human reliability for responding to potential accident scenarios in a decommissioning plant SFP. (See HRA Study in Appendix 2a).

Upon consideration of the sensitivities identified in the staff's preliminary study and to reflect actual operating practices at many decommissioning facility, the nuclear industry, through NEI, made important commitments (located in Appendix 6) which were reflected in the staff's updated risk assessment. The revisions to the risk assessment generally reflected changes of assumptions in the areas shown below. The applicability of the specific decommissioning industry commitments (DICs) with respect to the risk analysis results are discussed later in this chapter. How the commitments relate to specific risk conclusions and safety principles is also discussed in Chapter 4.

DIC #1 Cask drop analyses will be performed or single failure proof cranes will be in use for handling of heavy loads (i.e., phase II of NUREG 0612 will be implemented.)

DIC #2 Procedures and training of personnel will be in place to ensure that on site and off site resources can be brought to bear during an event.

DIC #3 Procedures will be in place to establish communication between on site and off site organizations during severe weather and seismic events.

DIC #4 An off site resource plan will be developed which will include access to portable pumps and emergency power to supplement on site resources. The plan would principally identify organizations or suppliers where off site resources could be obtained in a timely manner.

DIC #5 Spent fuel pool instrumentation will include readouts and alarms in the control room (or where personnel are stationed) for spent fuel pool temperature, water level, and area radiation levels.

DIC #6 Spent fuel pool seals that could cause leakage leading to fuel uncovery in the event of seal failure shall be self limiting to leakage or otherwise engineered so that drainage cannot occur.

DIC #7 Procedures or administrative control to reduce the likelihood of rapid drain down events will include (1) prohibitions on the use of pumps that lack adequate siphon protection or (2) control for pump; suction and discharge points. The functionality of anti-siphon devices will be periodically verified.

DIC #8 An on site restoration plan will be in place to provide repair of the spent fuel pool cooling systems or to provide access for makeup water to the spent fuel pool. The plan will provide for remote alignment of the makeup source to the spent fuel pool without requiring entry to the refuel floor.

DIC #9 Procedures will be in place to control spent fuel pool operations that have the potential to rapidly decrease spent fuel pool inventory. These administrative controls may require additional operations or management review, management physical presence for designated operations or administrative limitations such as restrictions on heavy load movements.

DIC #10 Routine testing of the alternative fuel pool makeup system components will be performed and administrative controls for equipment out of service will be implemented to provide added assurance that the components would be available, if needed.

Based upon the above design and operational features, industry commitments, technical comments from stakeholders and the input from the INEEL technical review, the staff's SFP risk model was updated. The results for the initiators which were assessed quantitatively are shown in Table 3.1 below.

Remember the Age of the Earth 4.6 to 10^9 years!

Table 3.1 Spent Fuel Pool Cooling Risk Analysis Frequency of Fuel Uncovery (per year)

INITIATING EVENT	Frequency of Fuel Uncovery
Loss of Offsite Power - Plant centered and grid related events	3.0E-08
Loss of Offsite Power - Events initiated by severe weather	1.3E-07
Internal Fire	4.5E-08
Loss of Pool Cooling	1.4E-08
Loss of Coolant Inventory	3.1E-09
Seismic Event	<3.0E-06[4]

SIGNIF. figures?

Assumed?

use standard

[4]This contribution includes seismically induced catastrophic failure of the pool (which dominates the results) and a small contribution from seismically induced failure of pool support systems

Cask Drop	2.2E-07[5]
Aircraft Impact	2.9E-09
Tornado Missile	<1.0E-09
Total	<3.4E-06

This table summarizes the core uncovery frequency for each accident sequence. The frequencies are point estimates, based on the use of point estimates for the input parameters. For the most part these input parameter values would be used as the mean values of the probability distributions that would be used in a calculation to propagate parameter uncertainty. Because the systems are essentially single train systems the point estimates therefore closely correlate to the mean values that would be obtained from a full propagation of parameter uncertainty.

The above results show that the estimated frequency for a zirconium fire is approximately 3E-06 per year, with the dominant contributions being from severe seismic events.

The various initiating event categories are discussed briefly below. The staff qualitative risk insights on the potential for SFP criticality are discussed at the end of this chapter.

3.3 Internal Event Scenarios Leading to Fuel Uncovery

The following summary is a description of accident for each internal event initiator: Details of the assessment are provided in Appendix 2.

3.3.1 Loss of Cooling

The loss of cooling initiating event may be caused by the loss of coolant system flow from the failure of pumps or valves (See Figure 3.0-1), from piping failures, from an ineffective heat sink (e.g., loss of heat exchangers), or from a local loss of power (e.g., electrical connections.) While it may not be directly applicable due to design differences in a decommissioning plant, operational data from NUREG-1275, Volume 12 [Ref. 3] shows that the frequency of loss of spent fuel pool cooling events in which a temperature increase of more than 20°F occurred can be estimated to be on the order of two to three events per 1000 reactor years. The data also showed that, for the majority of events, the duration of the loss of cooling was less than one hour. Only three events exceeded 24 hours, with the maximum duration being 32 hours. There were four events where the temperature increase exceeded 20°F, with the maximum increase being 50°F.

---

[5]For a single failure proof system without a load drop analysis. For plants where load drop analyses have been performed, the frequency should less than this value even for non single failure proof cranes.

* Operation experience at SFP what makes our decisions acceptable. Relate to HRA ?

Formatted Version, Rev. 5 1/19/00 1600 hours

The calculated fuel uncovery frequency for this initiating event is 1.4×10^{-6} per year. To have fuel uncovery, the plant operators would have to fail to recover the cooling system (either fails to notice the loss of cooling indications, or fails to repair or restore the cooling system). In addition, the operators would have to fail to provide makeup cooling using other onsite sources (e.g., fire pumps) or offsite sources (e.g., use of a fire brigade). For these recovery actions, there is a lot of time available. In the case of 1-year-old fuel (i.e., fuel that was in the reactor when it was shutdown one year previously),approximately 130 hours is available. Indications of a loss of pool cooling that are available to operators include: control room alarms and indicators, local temperature measurements, and eventually increasing area temperature and humidity and low pool water level from boiloff.

you will be challenged by operational events Duane Arnold, DF,

you need to relate or otherwise explain oper. exp.

Based on the assumptions made, the frequency of core uncovery is to be very low. A careful and thorough adherence to DICs 2, 5, 8 and 10 is crucial to establishing the low frequency. In addition, however, the assumption that walkdowns are performed on a regular, (once per shift) basis is important to compensate for potential failures to the instrumentation monitoring the status of the pool. The analysis has also assumed that the procedures and/or training are explicit in giving guidance on the capability of the fuel pool makeup system, and when it becomes essential to supplement with alternate higher volume sources. The analysis also assumed that the procedures and training are sufficiently clear in giving guidance on early preparation for using the alternate makeup sources.

what are these? Talk about difficult

The additional requirement of walkdowns being performed at least once per shift. is identified by the staff as a decommissioning staff requirement (DSR #1). In addition, this DSR includes the requirement for explicit procedures and operator training which provide guidance on the capability and availability of inventory makeup sources and the time available to initiate these sources.

3.3.2 Loss of Coolant Inventory

This initiator includes loss of coolant inventory from events such as those resulting from configuration control errors, siphoning, piping failures, and gate and seal failures. Operational data provided in NUREG-1275, Volume 12 show that the frequency of loss of inventory events in which a level decrease of more than one foot occurred can be estimated to be (on the order of) less than one event per 100 reactor years. Most of these events are as a result of fuel handler error and are recoverable. NUREG-1275 shows that, except for one event that lasted for 72 hours, there were no events that lasted more than 24 hours. Eight events resulted in a level decrease of between one and five feet, and another two events resulted in an inventory loss of between five and 10 feet.

Using the information from NUREG-1275, it can be estimated that 6% of the loss of inventory events will be large enough and/or occur for a duration that is long enough so that isolation of the loss is required if the only system available for makeup is the spent fuel pool makeup system. For the other 94% of the cases, operation of the makeup pump is sufficient to prevent fuel uncovery.

if leak prob. is ~10^{-3}, and you previously said you had one event that lasted 72 hours, then ? 1/200 ~ 5×10^{-6} = 5×10^{-6}

The calculated fuel uncovery frequency for loss of inventory events is 3.1×10^{-9} per year. Fuel uncovery occurs if plant operators fail to initiate inventory makeup either by use of onsite sources such as the fire pumps or offsite sources such as the fire brigade. In the case of a large leak, insolation of the leak would also be necessary if the make-up pump are utilized. The time available for operator action is considerable, and even in the case of a large leak, it is estimated that 40 hours will be available. Operators will be alerted to a loss of inventory condition by control room alarms and indicators, visibly decreasing water level in the pool, accumulation of water in unexpected locations and local alarms (radiation alarms, building sump high level arms, ect.).

As in the case for the loss of pool cooling, the frequency of core uncovery can be seen to be very low. Again a careful and thorough adherence to DICs 2, 5, 8 and 10 is crucial to establishing the low frequency. In addition, however, the assumption that walkdowns are performed on a regular, (once per shift) basis is important to compensate for potential failures to the instrumentation monitoring the status of the pool, the assumption that the procedures and/or training are explicit in giving guidance on the capability of the fuel pool makeup system, and when it becomes essential to sup0plement with alternate higher volume sources, the assumption that the procedures and training are sufficiently clear in giving guidance on early preparation for using the alternate makeup sources, are crucial to establishing the low frequency. In addition, NEI commitments 6, 7 and 9 have been credited with lowering the initiating event frequency.

If someone asks you what assurance you have that all decom. plants will abide by the NEI commitments, what is the answer?

3.3.3 Loss of Offsite Power from Plant-Centered and Grid Related Events

Frequency of Fuel Uncovery

Scenario

A loss of offsite power from plant-centered events typically involve hardware failures, design deficiencies, human errors (in maintenance and switching), localized weather-induced faults (e.g., lightning), or combinations of these. Grid-related events are those in which problems in the offsite power grid cause the loss of offsite power. With offsite power lost (and therefore onsite power is lost too, since we assume there is no diesel generator available to pick up the necessary electrical loads), there is no effective heat removal process for the spent fuel pool. If power were not restored quickly enough, the pool will heat up and boil off inventory until the fuel is uncovered. The diesel-driven fire pump ~~would be available to provide inventory~~ makeup. If the diesel-driven ~~pump fails~~, and if offsite power were not recovered in a timely manner, offsite recovery using fire engines is a possibility. With 1-year-old fuel (i.e., the youngest fuel in the fuel pool was shutdown in the reactor one year ago), 127 hours is available for this recovery action. (about)

Even given recovery of offsite power, the plant operators have to restart the fuel pool cooling pumps. Failure to do this or failure of the equipment to restart will necessitate other operator

recovery actions. Again, considerable time is available.

The calculated fuel uncovery frequency for this sequence of events is 3.0×10^{-8} per year. This frequency is very low, and similar to the cases for the loss of pool cooling and loss of inventory, is based on adherence to NEI commitments 2, 5, 8, and 10. In addition, the performance of regular plant walkdowns, and the availability of clear and explicit procedures and operator training is assumed.

3.3.4 Loss of Offsite Power from Severe Weather Events

Frequency of Fuel Uncovery

This event represents the loss of SFP cooling ~~resulting from~~ due to a loss of offsite power from severe-weather-related events. Until offsite power is recovered, the electrical pumps would be unavailable and the diesel-driven fire pump would be available to only provide makeup. When compared to the loss of offsite power events from grid-related and plant-centered causes, recovery of offsite power in this case is assumed to be less probable. In addition, given the conditions, it would be more difficult for offsite help to assist the fuel handlers at the site than for an ordinary loss of offsite power event.

The calculated fuel uncovery frequency for this event is 1.3×10^{-7} per year. As in the previous cases, this estimate was based on NEI commitments and on requirements in DSR #1.

3.3.5 Internal Fires

This event tree models the loss of SFP cooling caused by internal fires. We assumed that there is no automatic fire suppression system for the SFP area. The fuel handler may initially attempt to manually suppress the fire given that he responds to the control room or local area alarms. If the fuel handler fails to respond the alarm, or is unsuccessful in extinguishing the fire within the first 20 minutes, we assumed that SFP system will be significantly damaged and cannot be repaired within a few days. Once the inventory level drops below the SFP cooling system suction level, the fuel handlers have about 85 hours to provide some sort of alternate makeup, either using the site firewater system or by calling upon offsite resources. It was assumed that fire damages the plant power supply system such that the power to the electrical firewater pump is lost and would not be available.

The calculated fuel uncovery frequency for this event is 4.5×10^{-8} per year. As in the previous cases, this estimate was based on NEI commitments 2,5,8 and 10 and on requirements in DSR #1. In addition, NEI commitment 3 related to establishing communication between onsite and offsite organizations during severe weather is also important.

So what? relevance?

is assumed to be true

3.3.6 Heavy Load Drops

The staff investigated the frequency of dropping a heavy load in or near the spent fuel pool, and investigated potential damage to the pool from such a drop. The previous assessment done for resolution of Generic Issue 82 (in NUREG/CR-4982 (Ref 5)) only considered the possibility of a heavy load drop failing the pool wall. The assessment conducted for this study identified other failure modes, such as the pool floor, as also being credible for some sites. Details of the heavy load evaluation can be found in Appendix 2. The analysis exclusively considered drops that were severe enough to catastrophically damage the spent fuel pool such that pool inventory would be lost rapidly and it would be impossible to refill the pool using onsite or offsite resources. In essence there is no possibility for mitigation in such circumstances, only prevention. A catastrophic heavy load drop(that caused a large leakage path in the pool) would lead directly to a zirconium fire approximately 10 to 12 hours after the drop, depending on fuel age, burn up, and configuration. The dose rates in the pool area prior to any zirconium fire would be on the order of tens of thousands of rem per hour, making any potential recovery actions such as temporary large inventory addition systems very difficult. The staff concluded that non-catastrophic damage to the pool or its support systems from a load drop is captured and bounded by other initiators.

Based on discussions with structural engineers, the staff assumed that only spent fuel shipping casks had sufficient weight to catastrophically damage the pool if dropped. We assumed there is very low likelihood that other heavy loads would be moved over the spent fuel pool, and in addition, if there were a drop of one of these lighter loads over the spent fuel pool, there would be very low likelihood that it would cause catastrophic damage to the pool.

For a non-single failure proof load handling system that does not follow NUREG-0612 [Ref.4] guidelines, the likelihood of a heavy load drop (i.e., the drop frequency) was estimated, based on NUREG-0612 information, to have a mean value of 3.4×10^{-4} per year. The number of heavy load lifts was based on the NEI estimate of 100 spent fuel shipping cask lifts per year, which probably is an overestimate. For a single failure proof load handling system or a plant conforming to the NUREG-0612 guidelines, is estimated to have a mean value of 9.6×10^{-6} per year, again for 100 heavy load lifts per year but using new data from U.S. Navy crane experience. Once the load is dropped, the next question is whether the drop did significant damage to the spent fuel pool.

When estimating the failure frequency of the pool floor, the staff assumed that heavy loads physically travel near or over the pool approximately 13% of the total path lift length (the path lift length is the distance from the lift of the load to the placement of the load on the pool floor). The staff also assumed that the critical path length (the fraction of total path the load is lifted high enough above the pool that a drop could cause damage to the structure) is approximately 16% of the time the load is near or over the pool. The staff estimated the catastrophic failure rate from heavy load drops to have a mean value of 2.1×10^{-5} per year for a non-single failure proof system where reliance is placed on electrical interlocks, fuel handling system reliability, and safe load path procedures. The staff estimated the catastrophic failure rate from heavy load drops to have a mean value of 2.0×10^{-7} per year for a single failure proof system or a plant conforming to

all NUREG-0612 guidelines.

When estimating the failure frequency of the pool wall, the staff assumed one-in-ten heavy load drop events (0.1) will result in significant damage to the wall. For the non-single failure proof handling system, the mean value for the failure rate is 2.1×10^{-6} per year and for the single failure proof handling system the mean value for the failure rate is 2.0×10^{-8} per year. For comparison, the frequency given in NUREG/CR-4982 [Ref. 5] for wall failure was 3.7×10^{-8} per year, for 204 lifts per year. For 100 lifts, the NUREG/CR-4982 value would be 1.5×10^{-8} per year, very comparable to the estimate in this assessment.

The combined (floor and wall) expected frequency for catastrophic failure of non-single failure proof systems is 2.3×10^{-6} per year, and for single failure proof systems or a plant conforming to the NUREG-0612 guidelines is 2.2×10^{-7} per year. NEI has made a commitment (DIC #1) for the nuclear industry that future decommissioning plants will comply with phases 1 and 2 to the NUREG-0612 guidelines, which would put future decommissioning plants in the latter category.

3.4 Beyond Design Basis Spent Fuel Pool Accident Scenarios (External Events)

The following is a description of how we modeled each of the external event initiators, a discussion of the frequency of fuel uncovery associated with the initiator, and a description of the most important insights regarding risk reduction strategies for each initiator:

3.4.1 Seismic Events

When beginning our evaluation of the effect of seismic events on spent fuel pools, it became apparent that we do not have detailed information of how all the spent fuel pools were designed and constructed. We originally performed a simplified seismic risk analysis in our June 1999 draft risk assessment to help determine if there might be a seismic concern. The analysis indicated that seismic events could not be dismissed on the basis of a simplified approach. After further evaluation and discussions with stakeholders, we determined that it would not be cost effective to perform a plant-specific seismic evaluation for each spent fuel pool. Working with our stakeholders, we developed other tools that help assure the pools are sufficiently robust.

We believe spent fuel pool structures at nuclear power plants are seismically robust. They are constructed with thick reinforced concrete walls and slabs lined with thin stainless steel liners 1/8 to 1/4 inch thick.[6] Pool walls vary from 4.5 to 5 feet in thickness and the pool floor slabs are around 4 feet thick. The overall pool dimensions are typically about 50 feet long by 40 feet wide and 55 to 60 feet high. In boiling water reactor (BWR) plants, the pool structures are located in the reactor building at an elevation several stories above the ground. In pressurized water reactor (PWR) plants, the spent fuel pool structures are located outside the containment structure supported on the ground or partially embedded in the ground. The location and

[6] Except at Dresden Unit 1 and Indian Point Unit 1. These two plants do not have any liner plates. They were decommissioned more than 20 years ago and no safety significant degradation of the concrete pool structure has been reported.

supporting arrangement of the pool structures determine their capacity to withstand loads beyond their design basis. The dimensions of the pool structure are generally derived from radiation shielding considerations rather than structural needs. Spent fuel structures at operating nuclear power plants are able to withstand loads substantially beyond those for which they were designed. Consequently, they have significant seismic capacity.

Based on our work and that of an expert consultant (See Appendix 7 Kennedy report), we determined that seismic vulnerability of spent fuel pool structures is expected at levels of earthquake ground motion equal to 2.5 to 3.5 times a plant's safe shutdown earthquake (SSE). For sites east of the Rocky Mountains, ground motions three times the SSE are considered to be as high as physically possible ~~for east~~ given the tectonics in the east. For the west coast sites, as the magnitude of the seismic event increases, the probability of its occurrence goes down rapidly. Thus a seismic event equal to 2.5 to 3.5 SSE at a west coast site may be considered incredible for the site. Therefore, for west coast sites a seismic event greater than two times the SSE could be considered too large to be credible.

Spell out & Explain

How Seismic

??? Inconsistent!

Therefore, we assumed that seismic events greater than three times the SSE at a lower seismicity location (eastern US site) and two times the SSE at a higher seismicity location (west coast site) are nearly physically impossible. The seismic hazard component of the risk statement ~~that~~ can be set aside if it can be demonstrated that structural capacity (i.e., the HCLPF value) is greater than or equal to 2 times the SSE at higher seismicity sites and at 3 times the SSE at lower seismicity sites. Implicit in this is the assumption that pool structures are free from pre-existing degradation or other seismic vulnerabilities. To assure there are no vulnerabilities, NEI developed a seismic checklist, which we enhanced. The enhanced checklist seeks to assure there are no weaknesses in the design or construction of the pools that might make them vulnerable to earthquake ground motions several times higher than those in the site's safe shutdown earthquake (SSE). We note that spent fuel pool configuration, layout, and structural details vary considerably from one plant to another. For sites that fail the seismic check list or have a HCLPF value lower than the ground motion goal appropriate for the area of the US the pool is situated in, the utility would need to conduct a detailed assessment of the seismically induced probability of failure of its spent fuel pool structures and components.

Total

Many Reactors

Just said any more incredible!

?

Tada!!!

Our consultant's report (see Appendix 7) identifies 8 sites by site number for which seismically induced probability of failure (POF) is greater than $3X10^{-6}$ using the Lawrence Livermore National Laboratory 1993 hazard curves. For these sites it will be necessary to perform an evaluation of the POF using plant specific fragility information. For all other sites east of the Rocky Mountains, the use of the seismic check list should be adequate. The seismic checklist which the staff has developed to meet this goal is given in Appendix 5.

reg per year

3.4.2 Aircraft

We evaluated the likelihood of an aircraft crashing into a nuclear power plant site and seriously damaging the spent fuel pool or its support systems (details are in Appendix 2D). The generic data provided in DOE-STD-3014-96 [Ref. 6], were used to assess the likelihood of an aircraft crash into or near a decommissioning spent fuel pool. Aircraft damage can affect the structural

But this should be no hazard that for any operating plant so why evaluate it?

integrity of the spent fuel pool or affect the availability of nearby support systems, such as power supplies, heat exchangers, or water makeup sources, and may also affect recovery actions. There are two approaches that can be taken to evaluate the likelihood of an aircraft crash into a structure. The first is called the point target model which uses the area (length times width) of the target to determine the likelihood that an aircraft will strike the target. The aircraft itself does not have real dimensions when using this model. In the second approach, the DOE model modifies the point target approach to account for the wing span and the skidding of the aircraft after it hits the ground by including the additional area the aircraft could cover. Further, that model takes into account the plane's glide path by introducing the height of the structure into the equation, which effectively increase the area of the target, (see Appendix 2D).

why NOT evaluate a different strike (sabotage?)

Explain assumptions realistic reasonable

Ed's Needs to be addressed due to no EP

Our estimate of the frequency of catastrophic PWR spent fuel pool damage (i.e., the pool is so damaged that it rapidly drains and cannot be refilled from either onsite or offsite resources) resulting from a direct hit is based on one estimate using the point target area model for a 100 x 50 foot pool, with a conditional probability of 0.3 (large aircraft penetrating 6-ft of reinforced concrete) that the crash results in catastrophic damage. The point target model was chosen to model a direct hit on the pool. If 1-of-2 aircraft are large and 1-of-2 crashes result in significant damage, then the estimated range of catastrophic damage to the spent fuel pool is 9.6×10^{-12} to 4.3×10^{-8} per year. The mean value is estimated to be 2.9×10^{-9} per year. The frequency of catastrophic BWR spent fuel pool damage resulting from a direct hit by a large aircraft is the same as that for the PWR. Mark-I and Mark-II secondary containments generally do not appear to have any significant structures that might reduce the likelihood of aircraft penetration, although a crash into one of four sides of a BWR secondary containment may have a reduced likelihood of penetration due to other structures being in the way of the aircraft. Mark-III secondary containments may reduce the likelihood of penetration somewhat, as the spent fuel pool may be considered to be protected on one side by additional structures. If instead of a direct hit, the aircraft skidded into the pool or a wing clipped the pool, catastrophic damage may not occur. We project that skidding aircraft will be negligible contributors to the frequency of fuel uncovery resulting from catastrophic failure of the pool. The estimated frequencies of air craft induced catastrophic spent fuel pool failure are bounded by other initiators.

assumption or to Dave on basis?

basis?

Our estimate of the frequency of significant damage to spent fuel pool support systems (e.g., power supply, heat exchanger, or makeup water supply) is developed for three different situations. The first case is based on the DOE model including the glide path and the wing and skid area for a 400 x 200 x 30 foot structure (i.e., the support systems are located inside a large building) with a conditional probability of 0.01 that one of these systems is hit. This model accounts for damage from the aircraft including, for example, being clipped by a wing. We assumed that critical systems occupy only 1% of the total structure area. The estimated frequency range for significant damage to the support systems is 1.0×10^{-10} to 1.0×10^{-6} per year. The mean value is estimated to be 7.0×10^{-8} per year. The second case estimates the value for the loss of a support system (power supply, heat exchanger or makeup water supply) based on the DOE model including the glide path and the wing and skid area for a 10 x 10 x 10 foot structure (i.e., the support systems are housed in a small building). The

basis?

estimated frequency of support system damage ranges from 1.1×10^{-9} to 1.1×10^{-5} per year, with the mean estimated to be 7.3×10^{-7} per year. The third case uses the point model for this 10x10 structure, and the estimated value range is 2.4×10^{-12} to 1.1×10^{-8} per year, with the mean estimated to be 7.4×10^{-10} per year. Depending on the model approach (selection of the target structure size, use of the point target model or the DOE model), the mean value for an aircraft damaging a support system is in the 7×10^{-7} per year, or less, range. This is not the estimated frequency of fuel uncovery or a zirconium fire caused by damage to the support systems, since the frequency estimate does not include recovery, either onsite or offsite. As an initiator to failure of a support system leading to fuel uncovery and a zirconium fire, an aircraft crash is bounded by other more probable events. Recovery of the support system will reduce the likelihood of spent fuel uncovery.

Overall, the likelihood of significant spent fuel pool damage from aircraft crashes is bounded by other more likely catastrophic spent fuel pool failure and loss of cooling modes.

3.4.3 Tornadoes

We performed a risk evaluation of tornado threats to spent fuel pools (details are in Appendix 2E). We assumed that very severe tornadoes (F4 to F5 tornadoes on the Fujita scale) would be required to cause catastrophic damage to a PWR or BWR spent fuel pool. We then looked at the frequency of such tornadoes occurring and the conditional probability that if such a tornado hit the site, it would seriously damage the spent fuel pool or its support systems. To do this we examined the frequency and intensity of tornadoes in each of the continental United States using the methods described in NUREG/CR-2944 [Ref. 7]. The frequency of having an F4 to F5 tornado is estimated to be 5.6×10^{-7} per year for the central U.S., with a U.S. average value of 2.2×10^{-7} per year.

We then considered what level of damage an F4 or F5 tornado could do to a spent fuel pool or its support systems. Based on the buildings housing the spent fuel pools and the thickness of the spent fuel pools themselves, the conditional probability of catastrophic failure given a tornado missile is very low. Hence, the overall frequency of catastrophic pool failure caused by a tornado is extremely low (i.e., the calculated frequency of such an event is less than 1×10^{-9} per year)

We assumed that an F2 to F5 tornado would be required if significant damage were to occur to spent fuel pool support systems (e.g., power supply, cooling pumps, heat exchanger, or makeup water supply). The frequency of having an F2 to F5 tornado is estimated to be 1.5×10^{-5} per year for the central U.S., with a U.S. average value of 6.1×10^{-6} per year. As an initiator to failure of a support system, the tornado is bounded by other more probable events.

3.4.4 Criticality in Spent Fuel Pool

Due to the processes involved and lack of data, it was not possible to perform a quantitative risk assessment for criticality in the spent fuel pool. In Appendix 3 the staff performed an evaluation of the potential scenarios that could lead to criticality and identified those that are credible.

In this section the staff provides its qualitative assessment of risk due to criticality in the SFP, and its conclusions that with the additional requirements identified, the potential risk from SFP criticality is sufficiently small.

The assessment referenced in Appendix 3 identified two scenarios as credible, which are listed below.

(1) A compression or buckling of the stored assemblies could result in a more optimum geometry (closer spacing) and thus create the potential for criticality (see the NRC staff report "Assessment of the Potential for Criticality in Decommissioned Spent Fuel Pools," in Appendix 3). Compression is not a problem for high-density PWR or BWR racks because they have sufficient fixed neutron absorber plates to mitigate any reactivity increase, nor is it a problem for low-density PWR racks if soluble boron is credited. But compression of a low-density BWR rack could lead to a criticality since BWR racks contain no soluble or solid neutron absorbing material. High-density racks are those that rely on both fixed neutron absorbers and geometry to control reactivity. Low-density racks rely solely upon geometry for reactivity control. In addition, all PWR pools are borated, whereas BWR pools contain no soluble absorbing material. If ~~both PWR and~~ BWR pools were borated, criticality would not be achievable for a compression event.

(2) If the stored assemblies are separated by neutron absorber plates (e.g., Boral or Boraflex), loss of these plates could result in a potential for criticality for BWR pools. For PWR pools, the soluble boron would be sufficient to maintain sub-criticality. The absorber plates are generally enclosed by cover plates (stainless steel or aluminum alloy). The tolerances within a cover plate tend to prevent any appreciable fragmentation and movement of the enclosed absorber material. The total loss of the welded cover plate is not considered feasible.

Boraflex has been found to degrade in spent fuel pools due to gamma radiation and exposure to the wet pool environment. For this reason, the NRC issued Generic Letter 96-04 to all holders of operating licenses, on Boraflex degradation in spent fuel storage racks. Each addressee that uses Boraflex was requested to assess the capability of the Boraflex to maintain a 5% sub-criticality margin and to submit to the NRC proposed actions to monitor the margin or confirm that this 5% margin can be maintained for the lifetime of the storage racks. Many licensees subsequently replaced the Boraflex racks in their pools or reanalyzed the criticality aspects of their pools, assuming no reactivity credit for Boraflex.

Other potential criticality events, such as loose debris of pellets or the impact of water or firefighting foam (adding neutron moderation) during personnel actions in response to accidents were discounted due to the basic physics and neutronic properties of the racks and fuel, which would preclude criticality conditions being reached with any credible likelihood. For example, without moderation, fuel at current enrichment limits (no greater than 5 wt% U-235) cannot achieve criticality, no matter what the configuration. If it is assumed that the pool water is lost, a re-flooding of the storage racks with unborated water or fire-fighting foam may occur due to

personnel actions. However, both PWR and BWR storage racks are designed to remain subcritical if moderated by unborated water in the normal configuration. The phenomenon of a peak in reactivity due to low-density (optimum) moderation (fire-fighting foam) is not of concern in spent fuel pools since the presence of relatively weak absorber materials such as stainless steel plates or angle brackets is sufficient to preclude neutronic coupling between assemblies. Therefore, personnel actions to refill a drained spent fuel pool containing undeformed fuel assemblies would not create the potential for a criticality. Thus, the only potential scenarios described above in 1 and 2 involve crushing of fuel assemblies in low density racks or degradation of Boraflex over long periods in time.

To gain qualitative insights on the recriticality events that are credible, the staff considered the sequences of events that must occur. For scenario 1 above this would be require a heavy load drop into the a low density racked BWR pool compressing assemblies. From the work done on heavy load drop, the likelihood of a heavy load drop from a single failure proof crane has been determined to have a mean frequency of approximately 9.6E-6 per year, assuming 100 cask movements per year at the decommissioning facility. From the load path analysis done for that appendix it was estimated that the load could be over or near the pool approximately 13% of the movement path length, dependant on plant specific layout ~~specifics~~. The additional frequency reduction in the appendix to account for the fraction of time that the heavy load is lifted high enough to damage the pool liner is not applicable here because the fuel assemblies could be crushed without the same impact velocity being required as for the pool liner. Therefore, we ~~observe a potential~~ initiating frequency for crushing of approximately 1.2E-6 per year (based upon 100 lifts per year). Criticality calculations conducted for Appendix 3 show that even if the low density BWR assemblies were crushed by a transfer cask, it is "highly unlikely" that a configuration would be reached that would result in a severe reactivity event, such as a steam explosion which could damage and drain the spent fuel pool. The staff judges the chances of such a criticality event to be well below 1 chance in 100 even given that the transfer cask drops directly onto the assemblies. This would put the significant criticality likelihood well below 1E-8 per year, which justifies its exclusion from further consideration.

Deformation of the low density BWR racks by the dropped transfer cask was shown to most likely not result in any criticality events. However, if some mode of criticality was to be induced by the dropped transfer cask it would more likely be a small return to power for a very localized region, rather than the severe response discussed the above paragraph. This minor type of event would have essentially no offsite (or onsite) consequences since the reactions heat would be removed by localized boiling in the pool and water would provide shielding to the site operating staff. The reaction could be terminated with relative ease by the addition of boron to the pool. Therefore, the staff believes that qualitative (as well as some quantitative) assessment of scenario 1 demonstrates that it poses no significant risk to the public from SFP operation during the period that the fuel remains stored in the pool.

With respect to scenario #2 from above, (the gradual degradation of the Boraflex absorber material in high density storage racks), there is currently ~~not~~ sufficient data to quantify the likelihood of criticality occurring due to its loss. However, the current programs in place at operating plants to assess the condition of the Boraflex, and take remedial action if necessary

provide sufficient confidence that pool reactivity requirements will be satisfied . In order to meet the RG 1.174 safety principle of maintaining sufficient safety margins, the staff judges that continuation of such programs into the decommissioning phase would be required at all plants until all high density racks are removed from the SFP.

Additionally, to provide an element of defense in depth, the staff believes that inventories of boric acid be maintained on sites to respond to scenarios where loss of pool inventories have to be responded to by makeup of unborated water at PWR sites. The staff will also require that procedures be available to provide guidance to the operating staff as to when such boron addition may be beneficial.

Based upon the above conclusions and staff requirements, we believe that qualitative risk insights demonstrate conclusively that SFP criticality poses so meaningful risk to the public.

4.0 Implications of Spent Fuel Pool Risk For Regulatory Requirements

An important motivation for performing the risk analysis contained in this report is to provide insight into the regulatory requirements that would be needed to control the risk at decommissioning plants. In order to do that, Chapter 4.1 presents a brief summary of the risk results that are most pertinent to that end.

The analysis in Chapter 3 explicitly examines the risk impact of specific design and operational characteristics. Some of these have been proposed by the Nuclear Energy Institute in a letter to the NRC dated November 12, 1999 [See Ref. 1 or Appendix 6]. Others came to light as a result of the analysis itself. These characteristics are summarized in Chapter 4.1. The NRC intends to make these the principle aspects of the risk-informed approach to oversight of decommissioning plants.

Chapter 4.2 examines the design and operational elements that are important in ensuring that the risk from a SFP is sufficiently low and how these elements support the safety principles of RG 1.174 as they apply to a SFP.

In addition, the industry and other stakeholders have proposed the use of risk-informed decision-making to assess regulatory requirements in three specific areas; namely, emergency preparedness, security and insurance. The technical results of this report might be used either to justify plant-specific exemptions from these requirements, or to determine how these areas will be treated in a risk-informed oversight process. Chapter 4.3 examines the implications of the technical results for those specific regulatory decisions.

4.1. Summary of the Technical Results

The thermal-hydraulic analysis presented in Appendix 1 demonstrates that the conditions necessary for a zirconium fire exist in spent fuel pools of decommissioning plants for a period of several years following shutdown. The analysis shows that the length of time over which the fuel is vulnerable depends on several factors, including fuel burn up and pool configuration. In

some cases analyzed in Appendix 1 the required decay time is 5 years. However, the time ~~period for any specific plant will vary~~. Plant-specific analysis is needed to justify the use of shorter decay periods.

The consequence analysis presented in Appendix 4 demonstrates that the consequences of a Zirconium fire in a decommissioning plant are very large. The integrated dose to the public is generally comparable to a large early release. Early fatalities, however, are low compared to those from a large early release from an operating reactor accident, and are very sensitive to the effectiveness of evacuation.

For a decommissioning plant with about one year of decay time, the timing of radiological releases from zirconium fires is significantly slower than those from the most limiting reactor accident scenarios. This is due to the slow heat up time of the fuel. In addition, for many of the sequences leading to zirconium fires, there are ~~very large delay times due to the long time~~ required to boil off the spent fuel pool water inventory. Thus, while the consequences of zirconium fires are in some ways comparable to large early releases from reactor accidents, the ~~timing is much slower~~.

The annual frequency of events leading to zirconium fires at decommissioning plants is estimated to be less than 3×10^{-6} per year for a plant that implements the design and operational characteristics discussed below. This estimate can be much higher for a plant that does not ~~embody~~ these characteristics. The most significant contributor to this risk is a seismic event which exceeds the design basis earthquake. . ~~This~~ overall frequency is within the recommended pool performance guideline (PPG) for large radionuclide releases due to zirconium fire of 1×10^{-5} per year. As noted above, zirconium fires are estimated to be similar to large early releases (LERF) in some ways, but less severe in others.

4.2 Risk Impact of Specific Design and Operational Characteristics.

This section will discuss the design and operational elements that are important in ensuring that the risk from a SFP is sufficiently low. Relationship of the elements to the quantitative risk findings will be discussed as well as how the elements support additional safety principles of RG 1.174 as they apply to a SFP.

4.2.1. When proposed changes result in an increase in core damage frequency and/or risk, the increases should be small and consistent with the intent of the Commission's Safety Goal Policy Statement.

The staff's risk assessment as discussed in Chapter 3 shows that the baseline risk from a decommissioning spent fuel pool is a frequency for a zirconium fire of less than 3×10^{-6} per year. As was discussed in Chapter 2, the staff has determined that such a fire results in a large radionuclide release and poses a highly undesirable end state for a spent fuel pool accident. Therefore the staff has judged that a pool performance guideline (PPG) of 1×10^{-5} per year derived from the RG 1.174 application of LERF should be applied. The risk assessment shows that the SFP baseline risk is well under the recommended PPG.. In assessing secondary

guideline (the changes in risk from changes in regulatory requirements), the staff considered a potential relief from EP requirements as the modification.

Staff consequence analysis in Appendix 4 shows that the early health impacts from zirconium fire scenarios are significantly impacted by evacuation. This evacuation will greatly reduce the early fatalities near the plant site. However, this analysis also showed that for the slowly evolving SFP accident sequences, the initiation of effective evacuation can be much delayed in comparison to an operating reactor, where the accident results in high offsite does much more rapidly. Based upon this insight, the staff will require decommissioning staff requirement (DSR) #2, that a basic evacuation scheme be maintained at the plant. This scheme will include guidance on when offsite evacuation should be initiated, and ensure that current liaisons with offsite emergency organizations be maintained so that an ad hoc evacuation (as is done for transportation emergencies) can be put into place when needed. Since the slower evacuation expected from such an ad hoc effort was still shown to be effective for the SFP fire scenarios, this change from a formal offsite EP program is not expected to have any meaningful risk impact.

In addition to DSR #2, the low numerical risk results shown in Chapter 3 and Appendix 2 are derived from a number of design and operational elements of the SFP. As shown in those sections, the dominant risk contribution is from seismic events well beyond the plants original design basis. The baseline seismically initiated zirconium fire frequency from our risk assessment is predicated upon implementation of the seismic checklist shown in Appendix 5. The staff will require that such a checklist (DSR #3) be successfully implemented at all decommissioning facilities prior to relief from any regulatory requirements.

The accident sequences in Chapter 3 associated with loss of cooling or loss of inventory are quantified to result in low risk due to a number of elements that enhance the ability of the operators to respond successfully to the events with onsite and offsite resources. Without these elements, the probability of the operators detecting and responding to the loss of cooling or inventory would be higher and public risk from these categories of SFP accidents could be significantly increased. Some elements were also identified that reduce the likelihood of the loss of cooling or loss of inventory initiators, including both design as well as operational issues. The elements proposed by industry (Decommissioning Industry Commitments (DICs)) are identified below.

To reduce the likelihood of loss of inventory the following was committed to by industry:

DIC #6 Spent fuel pool seals that could cause leakage leading to fuel uncovery in the event of seal failure shall be self limiting to leakage or otherwise engineered so that drainage cannot occur.

DIC #7 Procedures or administrative control to reduce the likelihood of rapid drain down events will include (1) prohibitions on the use of pumps that lack adequate siphon protection or (2) control for pump; suction and discharge points. The functionality of anti-siphon devices will be periodically verified.

DIC #9 Procedures will be in place to control spent fuel pool operations that have the potential to rapidly decrease spent fuel pool inventory. These administrative controls may require additional operations or management review, management physical presence for designated operations or administrative limitations such as restrictions on heavy load movements.

The high probability of the operators identifying and diagnosing a loss of cooling or inventory is dependent upon;

DIC #2 Procedures and training of personnel will be in place to ensure that on site and off site resources can be brought to bear during an event.

DIC #3 Procedures will be in place to establish communication between on site and off site organizations during severe weather and seismic events.

DIC #4 An off site resource plan will be developed which will include access to portable pumps and emergency power to supplement on site resources. The plan would principally identify organizations or suppliers where off site resources could be obtained in a timely manner.

DIC #5 Spent fuel pool instrumentation will include readouts and alarms in the control room (or where personnel are stationed) for spent fuel pool temperature, water level, and area radiation levels.

DIC #8 An on site restoration plan will be in place to provide repair of the spent fuel pool cooling systems or to provide access for makeup water to the spent fuel pool. The plan will provide for remote alignment of the makeup source to the spent fuel pool without requiring entry to the refuel floor.

we don't judge!

The staff's risk evaluation also shows that the potential for pool failure due to heavy load drop to be significant if appropriate design and procedural controls are not in place. The staff judges that such controls are provided by the decommissioning industry commitments (DICs).

are acceptable

DIC #1 Cask drop analyses will be performed or single failure proof cranes will be in use for handling of heavy loads (i.e. phase II of NUREG-0612) will be implemented).

4.2.2. The Proposed Change Is Consistent with the Defense-in-depth Philosophy.

an accident in

The staff's risk assessment demonstrates that the risk from a decommissioning plant SFP accident is very small, if industry commitments are implemented as assumed in the risk study. Due to the very different nature of a SFP accident versus ~~the threat from~~ an operating reactor, with respect to system design capability needs and event timing, the defense-in-depth function of reactor containment is not appropriate. However the staff has identified that the defense-in-depth of some form of emergency planning can be useful as a means of achieving consequence mitigation. The degree to which it may be required as an additional barrier is a function of the

what is DSR#3?

uncertainty associated with the prediction of the frequency of the more catastrophic events, such as beyond design basis earthquakes. There can be a trade off between the formality with which the elements of emergency planning (procedures, training, performance of exercises) are treated and the increasing safety margin as the fuel ages and the time for response gets longer. Therefore the staff has identified the following decommissioning requirement above, which is stated:

Confine

DSR #4 Each decommissioning plant will develop and maintain a site emergency plan, that contains guidance on when a site emergency should be declared with respect to the possibility of a SFP fire. The plan will also identify off site liaisons with public emergency organizations to put in place ad hoc evacuation so as to have an effective evacuation prior to the postulated zirconium fire. The elements of this plan will be submitted to the staff for approval prior to any relief for full EP being considered.

Doesn't this encompass DSR#2?

For how long?

4.2.3 The Proposed Change Maintains Sufficient Safety Margins

As discussed in Chapter 2 the safety margins associated with fuel in the spent fuel pool are much greater than those associated with an operating reactor due to the low heat removal requirements and long time frames available for recovery from off normal events. Due to these larger margins the staff judges that the skid mounted and other dedicated SFP cooling and inventory systems in place do provide adequate margins. However, the staff assessment did identify one area where additional margins are of benefit in moderating the risk from potential pool re-criticality. Due to the potential for loss of inventory events that can be recovered by use of alternate water sources, the potential exists for loss of shutdown margins with the addition of unbraced water to pools that originally are borated. Additionally for pools that utilize Boraflex absorbers in high density racks, having boron on site for addition to the pool, would allow for quick restoration of shutdown margin if the rack surveillance and monitoring program did identify any significant degradation of the Boraflex. This leads to the following decommissioning staff requirement:

DSR #5 All decommissioning plants will retain on site quantities of soluble boron sufficient for maintaining pool shutdown margins in a borated pool which is assumed to have 50% of its water mass replace with unbraced water. Additionally all decommissioning plants that utilize Boraflex absorbers will maintain sufficient soluble boron on site to make up shutdown reactivity margin lost due to degradation of 20% of Boraflex in the high density racks. Procedures will also be developed on the use of this boron for either scenario.

Is this req'd for operating plants?

4.2.4. The Impact of the Proposed Change Should Be Monitored Using Performance Measurement Strategies.

RG 1.174 states that an implementation and monitoring plan should be developed to ensure that the engineering evaluation conducted to examine the impact of the proposed changes continues to reflect the actual reliability and availability of SSCs that have been evaluated. This will ensure

that the conclusions that have been drawn will remain valid. For the SFP risk evaluation ~~this~~ ~~identifies~~ three primary areas for performance monitoring: 1) The performance and reliability of SFP cooling and associated power and inventory makeup systems, 2) ~~Monitoring of~~ the Boraflex condition for high density fuel racks, and 3) ~~Monitoring~~ crane operation and load path control for cask movements.

Monitoring ~~of the~~ performance and reliability of the SFP support systems, heat removal, power and inventory should be carried out under the provisions of the maintenance rule ~~50.65~~. Decommissioning plant licensees will retain the commitment to maintain a list of equipment within the scope of the maintenance rule as well as applicable performance criteria they are assessed against. Since the staff will not entertain requests for exemptions from this Rule for decommissioning plants, no additional DSR is required in this area.

With respect to monitoring of the Boraflex absorber material, the current monitoring programs required by Generic Letter 96-04 [Ref. 3] will be maintained by decommissioning plants until all fuel is removed from the SFP. This generates a decommissioning staff requirement (DSR).

DSR #6 Licensees will maintain a program to provide surveillance and monitoring of Boraflex in high density spent fuel racks until such a time as ~~de~~ high density racks are retained in the pool. The SFP licensees will also have procedures in place to assess degradation impact on reactivity shutdown margin and provide additional pool boration as necessary to maintain the needed margins.

With respect to monitoring and control of heavy load activities and load path control, licensee guidance in this area will be provided by DIC # 1.

4.3. Implications for Regulatory Requirements Related to Emergency Preparedness, Security and Insurance

The industry and other stakeholders have expressed interest in knowing the relevance of the results of this study to decisions regarding specific regulatory requirements. These decisions could be made in response to plant-specific exemption requests, or as part of the integrated rulemaking for decommissioning plants. Such decisions can be facilitated by a risk-informed examination of the both the deterministic and probabilistic aspects of decommissioning. Three examples of such regulatory decisions are presented in this section.

4.3.1 Emergency Preparedness

The requirements for emergency preparedness for are contained in 10CFR 50.47 [Ref. 4] and Appendix E [Ref. 5]. Further guidance on the basis for EP requirements is contained in NUREG-0396 [Ref. 6]. The general goal of EP requirements is to prevent early fatalities and to reduce offsite dose from accidents.

In the past, the NRC staff has granted exemptions from emergency planning requirements for decommissioning plants that could demonstrate that they were beyond the period in which a

zirconium fire could occur. The rationale for those decisions was that, in the absence of a zirconium fire, a decommissioning plant had no appreciable scenarios for which the consequences justify the imposition of an EP requirement. The results of this technical study confirm that position for both the scenarios resulting in a potential zirconium fire as well as credible pool criticality events.

In some cases, emergency preparedness exemptions have also been granted to plants which were still in the window of vulnerability for zirconium fire. In these cases, the justification was that enough time had elapsed since shutdown that the evolution of a zirconium fire accident would be slow enough to allow effective offsite protective actions on an ad hoc basis, without the need for emergency planning. The staff believes that the technical analysis discussed in Chapter 3 and the decision criteria laid out in Chapter 2 have direct bearing on how such exemption requests should be viewed in the future. In addition, this information has bearing on the need for, and the extent of, emergency preparedness requirements in the integrated rulemaking.

The consequence analysis presented in Appendix 4 demonstrates that the offsite consequences of a zirconium fire are comparable to those from operating reactor severe accidents. Further, the analysis demonstrates that timely evacuation can significantly reduce the number of early fatalities due to a zirconium fire. The thermal-hydraulic analysis presented in appendix 1 confirms our earlier conclusion that zirconium fire events evolve slowly, even for initiating events that result in a catastrophic loss of fuel pool coolant. The results in Chapter 3 also show that the frequency of zirconium fires is low when compared with the risk guidelines from RG 1.174. Thus the risk associated with early fatalities from these scenarios is low. Based on this combination of low risk and slow evolution, the Commission might decide to reduce or eliminate EP requirements for decommissioning plants. With respect to the potential for pool criticality, the staff's assessment discussed in Chapter 3 and Appendix 3 demonstrates that credible scenarios for criticality are precluded by monitoring programs or are highly unlikely; and even if they do occur would not be expected to have offsite consequences. Therefore the conclusions regarding possible reductions in EP program requirements are not impacted.

One important safety principle of RG 1.174 is consistency with the defense in depth philosophy. In the rationalist approach, defense in depth is included in a plant design to account for uncertainties in the analysis or operational data. The spent fuel pools at operating reactors and decommissioning facilities do not exhibit the defense in depth accorded to the reactor. As discussed in Chapter 1, this difference is justified in light of the considerably greater margin of safety of the SFP compared with reactors. For SFPs at operating reactors, defense in depth consists mainly of the mitigating effect of emergency preparedness. The Commission might consider retaining a baseline level of EP requirements for decommissioning plants as a defense in depth measure. This might be justified in view of the uncertainties associated with the risk analysis presented herein. The staff has not attempted to assess what level of emergency preparedness might be needed to provide this defense in depth. However, given the slow nature of these accidents, we believe it would be substantially lower than what is currently required for operating reactors.

The risk assessments contained in this report indicate that it would be acceptable to reduce the level of emergency preparedness to a minimum baseline level at a decommissioning reactor after a period of 1 year has elapsed. For purposes of this study, a 1 year period was considered the minimum decay time necessary to reduce the pool heat load to a level that would provide sufficient human response time for anticipated transients, and minimize any potential gap release. Any licensee wishing to gain relief from the EP requirements prior to the one year post-shutdown period given credit for in this report would need to demonstrate a more robust reaction time than that credited in the human reliability analysis employed in this study. The staff would be receptive to an industry initiative or plant specific application that would attempt to advance the state of the art in this area.

4.3.2 Security

Currently licensees that have permanently shutdown reactor operations and have offloaded the spent fuel into the SFP are still required to meet all the security requirements for operating reactors in 10 CFR 73.55 [Ref 7]. This level of security would require a site with a permanently shutdown reactor to provide security protection at the same level as that for an operating reactor site. The industry has asked the NRC to consider whether the likelihood of radiological release from decommissioning plants due to sabotage is low enough to justify modification of safeguards requirements for SFPs at decommissioning plants.

In the past, decommissioning licensees have requested exemptions from specific regulations in 10 CFR 73.55, justifying their requests on the basis of a reduction in the number of target sets susceptible to sabotage attacks, and the consequent reduced hazard to public health and safety. Limited exemptions based on these assertions have been granted. The risk analysis in this report does not take exception to the reduced target set argument; however, the analysis does not support the assertion of a lesser hazard to public health and safety, given the consequences that can occur from a sabotage induced uncovery of fuel in the SFP when a zirconium fire potential exists. Further, it cannot evaluate the potential consequences of a sabotage event that could directly cause off site fission product dispersion, say from a vehicle bomb that was driven into the SFP even if a zirconium fire was no longer possible. However, this report would support a regulatory framework that relieves licensees from selected requirements in 10 CFR 73.55 on the basis of target set reduction when all fuel has been placed in the SFP.

The risk estimates contained in this report are based on accidents initiated by random equipment failures, human errors or external events. PRA practitioners have developed and used dependable methods for estimating the frequency of such random events. By contrast, this analysis, and PRA analyses in general, do not include events due to sabotage. No established method exists for estimating the likelihood of a sabotage event. Nor is there a method for analyzing the effect of security provisions on that likelihood. Security regulations are based on a zero tolerance for sabotage involving special nuclear material - which includes spent fuel; the regulations are designed and structured to remove sabotage from design basis threats at a commercial nuclear power plant, regardless of the probability or consequences.

The technical information contained in this report shows that the consequences of a zirconium fire would be high enough to justify provisions to prevent sabotage. Moreover, the risk analysis could be used effectively to assist in determining priorities for, and details of, the security capability at a plant. However, there is no information in the analysis that bears on the level of security necessary to limit the risk from sabotage events. Those decisions will continue to be made based on a deterministic assessment of the level of threat and the difficulty of protecting the facility.

~~In an associated regulatory arena,~~ 10 CFR 73.51, "Physical Protection for Spent Nuclear Fuel and High-Level Radioactive Waste," allows facilities not associated with an operating power reactor to store spent fuel at an independent spent fuel storage installation (ISFSI). This rule provides performance-based regulations specifically designed for these types of storage installations, i.e., fuel in dry cask containers or other storage formats. [redacted]

Ex

The proposed rulemaking would provide regulations specifically applicable to power reactor sites that have permanently ceased operations. The new rulemaking would codify and consolidate current regulations at a level commensurate with the reduced potential of sabotage at permanently shutdown sites. To develop this rulemaking, we will review existing regulations in 10 CFR 73.55 and determine what requirements are necessary for a permanently shutdown power reactor. After analyzing the security areas that need to be protected, we will eliminate requirements that are beyond the protection strategy needed for a permanently shutdown power reactor site and its capability to preclude a radiological release that could impact public health and safety.

remove [redacted]

The staff also noted that the applicability of 10 CFR 26 [Ref 10] has not been established for decommissioning reactors once the fuel has been removed from the reactor vessel and placed

in the SFP, and specifically does not apply to ISFSIs licensed under 10 CFR 72. Given the importance of a vehicle bomb threat to the integrity of SFP, and the significance of HRA to the conclusions reached in the SFP risk analysis, the staff recommends that for coherency in the regulations, both of these subjects be revisited during the overall integration of rules for decommissioning reactors.

4.3.3 Insurance

In accordance with 10 CFR 140 [Ref. 11], each 10 CFR 50 licensee is required to maintain public liability coverage in the form of primary and secondary financial protection. This coverage is required to be in place from the time unirradiated fuel is brought onto the facility site until all the radioactive material has been removed from the site, unless the Commission terminates the Part 50 license or otherwise modifies the financial protection requirements. The industry has asked the NRC to consider whether the likelihood of large scale radiological releases from decommissioning plants is low enough to justify modification of the financial protection requirements once the plant is permanently shutdown and prior to complete removal of all radioactive material from the site.

In the past, licensees have been granted exemptions from financial protection requirements on the basis of deterministic analyses showing that a zirconium fire could no longer occur. The analysis in this report supports continuation of this practice in the interim, and would support a revised regulatory framework for decommissioning plants that eliminates the need for insurance protection when a plant-specific thermal-hydraulic analysis demonstrates that a zirconium fire can no longer occur.

The NRC staff has considered whether the risk analysis in this report justifies relief from this requirement for decommissioning plants during the period when they are vulnerable to zirconium fires. As part of this effort, the staff determined that an analogy can be drawn between a SFP at a decommissioning plant and a wet (as opposed to dry) Independent Spent Fuel Storage Installation (ISFSI) licensed under 10 CFR 72 for which no indemnification requirement currently exists. Spent reactor fuel aged for one year can be stored in an ISFSI (wet or dry). The risk analysis in this report predicts high consequences for a zirconium fire, and identifies a generic window of vulnerability out to 5 years. The Commission has suggested in the staff requirements memorandum (SRM) for SECY-93-127 [Ref. 12] that insurance coverage is required unless a large scale radiological release is deemed incredible. Further, they instructed the staff to determine more precisely the appropriate spent fuel cooling period after plant shut down, and to determine the need for primary financial protection for ISFSIs.

Since the consequences are high, the frequency of a zirconium fire occurring in a wet ISFSI or a decommissioning reactor SFP would have to be acceptably low to justify no regulatory requirement for indemnification protection. A dry ISFSI is not under consideration since the fuel is already air cooled and no threat of zirconium fire exists. The zirconium fire frequencies presented in Chapter 3 for a decommissioning reactor SFP ~~do not fit the category of incredible. They~~ are comparable to the frequencies of large releases from some operating reactors. The staff is not aware of any basis for concluding that the frequency of a zirconium fire occurring in a

wet ISFSI would be significantly different than those presented in Chapter 3, and thus would conclude that indemnification should be required for operation of a wet ISFSI to be consistent with a decommissioning reactor SFP and provide for coherency in the regulations.

The staff knows of no frequency criterion which could be cited to justify reduction or elimination of the insurance requirement while a vulnerability to zirconium fire exists. Defining or applying such a criterion would be inconsistent with Commission direction provided in SECY-93-127. On the other hand, the possibility exists that the 5 year window of vulnerability could be reduced with more refined thermal-hydraulic calculations or other constraints on such parameters as fuel configuration. The staff would be receptive to an industry initiative designed to advance the state of the art in this area such that the period of vulnerability to zirconium fire could be reduced.

5.0 References

References for Executive Summary

1. U.S. Nuclear Regulatory Commission, "An Approach for Using Probabilistic Risk Assessment In Risk-Informed Decisions On Plant-Specific Changes to the Licensing Basis," Regulatory Guide 1.174, July 1998.
1. Dana A. Powers, Chairman of the Advisory Committee on Reactor Safeguards, U.S. Nuclear Regulatory Commission, letter to Dr. William D. Travers, U.S. Nuclear Regulatory Commission, "Spent Fuel Fires Associated With Decommissioning," November 12, 1999.
2. U.S. Code of Federal Regulations, "Standards for Protection Against Radiation," Part 20, Title 10, "Energy."

References for Chapter 1.0

1. U.S. Code of Federal Regulations, "Domestic Licensing of Production and Utilization Facilities," Part 50, Title 10, "Energy."

References for Chapter 2.0

1. U.S. Nuclear Regulatory Commission, "Use of Probabilistic Risk Assessment Methods in Nuclear Regulatory Activities; Final Policy Statement," Federal Register, Vol. 60, No. 158, August 16, 1995/ Notices.
2. U.S. Nuclear Regulatory Commission, "An Approach for Using Probabilistic Risk Assessment In Risk-Informed Decisions On Plant-Specific Changes to the Licensing Basis," Regulatory Guide 1.174, July 1998.
3. U.S. Code of Federal Regulations, "Requirements for Monitoring the Effectiveness of Maintenance at Nuclear Power Plants," Section 65, Part 50, Title 10, "Energy."

References for Chapter 3.0

1. Dana A. Powers, Chairman of the Advisory Committee on Reactor Safeguards, U.S. Nuclear Regulatory Commission, letter to Dr. William D. Travers, U.S. Nuclear Regulatory Commission, "Spent Fuel Fires Associated With Decommissioning," November 12, 1999.
2. U.S. Nuclear Regulatory Commission, "Regulatory Analysis for the Resolution of Generic Safety Issue 82, "Beyond design Basis Accidents in Spent Fuel Pools," NUREG-1353, April 1989.
3. U.S. Nuclear Regulatory Commission, " Operating Experience Feedback Report-Assessment of Spent Fuel Cooling," NUREG-1275, Volume 12, February 1997.
4. U.S. Nuclear Regulatory, "Control of Heavy Loads at Nuclear Power Plants, Resolution of Generic Technical Activity A-36," NUREG-0612, July 1980.
5. Sailor, et.al., "Severe Accidents in Spent Fuel Pools in Support of Generic Safety Issue 82", NUREG/CR-4982 (BNL-NUREG-52093), July 1987.

6. DOE-STD-3014-96, "Accident Analysis for Aircraft Crash Into Hazardous Facilities," U.S. Department of Energy, October 1996.
7. NUREG/CR-2944, "Tornado Damage Risk Assessment," Brookhaven National Laboratory, September 1982.

References for Chapter 4.0

1. Lynnette Hendricks, Nuclear Energy Institute, letter to Office of Nuclear Reactor Regulation, dated November 12, 1999.
2. U.S. Nuclear Regulatory Commission, "An Approach for Using Probabilistic Risk Assessment In Risk-Informed Decisions On Plant-Specific Changes to the Licensing Basis," Regulatory Guide 1.174, July 1998.
3. U.S. Nuclear Regulatory Commission, "Boraflex Degradation in Spent Fuel Pool Storage Racks," Generic Letter 96-04, June 1996.
3. U.S. Code of Federal Regulations, "Emergency Plans," Section 47, Part 50, Title 10, "Energy."
5. U.S. Code of Federal Regulations, "Emergency Planning and Preparedness For Production and Utilization," Appendix E, Part 50, Title 10, "Energy."
6. U.S. Code of Federal Regulations, "Planning Basis For The Development Of State and Local Government Radiological Emergency Response Plans In Support of Light Water Nuclear Power Plants," NUREG-0396, December 1978.
7. U.S. Code of Federal Regulations, "Requirements for Physical Protection of Licensed Activities in Nuclear Power Reactors Against Radiological Sabotage," Section 55, Part 73, Title 10, "Energy."
8. U.S. Code of Federal Regulations, "Requirements for Physical Protection of Licensed Activities," Section 50, Part 73, Title 10, "Energy."
9. U.S. Code of Federal Regulations, "Licensing Requirements for the Independent Storage of Spent Nuclear Fuel and High-Level Radioactive Waste," Part 72, Title 10, "Energy."
10. U.S. Code of Federal Regulations, "Fitness for Duty Programs," Part 26, Title 10, "Energy."
11. U.S. Code of Federal Regulations, "Financial Protection Requirements and Indemnity Agreements," Part 140, Title 10, "Energy."
12. U.S. Nuclear Regulatory Commission, "Financial Protection Required of Licensees of Large Nuclear Power Plants During Decommissioning," SECY-93-127, dated July 13, 1993.

6.0 Acronyms

ACRS	Advisory Committee on Reactor Safeguards
ANSI	American National Standard Institute
ANS	American Nuclear Society
ASB	NRC Auxiliary Systems Branch (Plant Systems Branch)
atm	atmosphere
BNL	Brookhaven National Laboratory
BTP	branch technical position
BWR	boiling water reactor
CFD	computational fluid dynamics
CFM	cubic feet per minute
CFR	Code of Federal Regulations
DIC	decommissioning industry commitments
DOE	Department of Energy
DSP	decommissioning status plant
DSR	decommissioning staff requirement
ECCS	emergency core cooling system
EP	emergency plan
EPRI	Electric Power Research Institute
ET	event tree
FFU	frequency of fuel uncovery
FT	fault tree
gpm	gallon(s) per minute
GSI	generic safety issue
GWD	gigawatt-day
HCLPF	High-Confidence/Low probability of failure
HRA	human reliability analysis
HVAC	heating, ventilation, and air conditioning
INEEL	Idaho National Engineering and Environmental Laboratory
ISFSI	independent spent fuel pool installation
kW	kilowatt
LERF	large early release frequency
LLNL	Lawrence Livermore National Laboratory
LOSP	loss of offsite power

LWR	light water reactor
MR	maintenance rule
MW	megawatt
MWD	megawatt-day
MTU	megaton uranium
NEI	Nuclear Energy Institute
NRC	Nuclear Regulatory Commission
NRR	NRC Office of Nuclear Reactor Regulation
POE	probability of exceedance
POF	probability of failure
PRA	probabilistic risk assessment
PWR	pressurized water reactor
QA	quality assurance
RES	NRC Office of Research
RG	regulatory guide
SF	spent fuel
SFP	spent fuel pool
SFPC	spent fuel pool cooling system
SFPCC	spent fuel pool cooling and cleaning system
SNL	Sandia National Laboratory
SRM	staff requirements memorandum
SRP	standard review plan
SSC	systems, structures, and components
SSE	safe shutdown earthquake
TS	technical specification
UKAEA	United Kingdom Atomic Energy Authority
WIPP	Waste Isolation Pilot Plant