KEWAUNEE

May 2001

PROPOSED WRITTEN EXAMINATION

RO Provided References

1. Rx Data Manual 9.1.2,
2. Rx Data Manual 9.2,
3. Rx Data Manual 5.1.1.1
4. Rx Data Man. RD-14.1 page 28
5. Tech. Spec. Figure 2.1-1
6. RD 2.2.9
7. IPEOP F-0.1
8. E-AR-09 figure 1
9. STEAM TABLES

Xenon Behavior On A Reactor Trip
From 100%, 80%, 60% and 40% Power

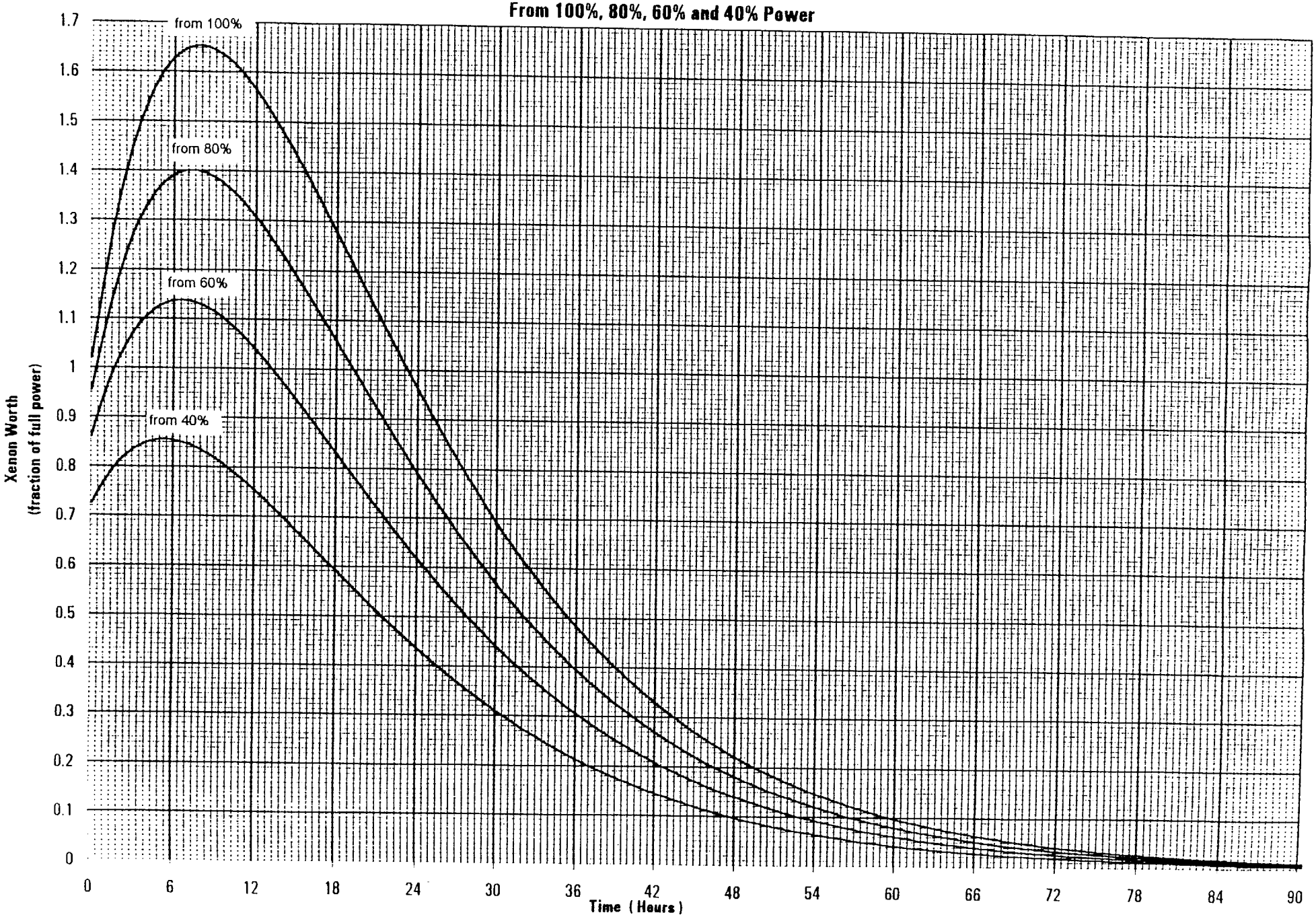

Cycle 24 Xenon Worth vs. Burnup

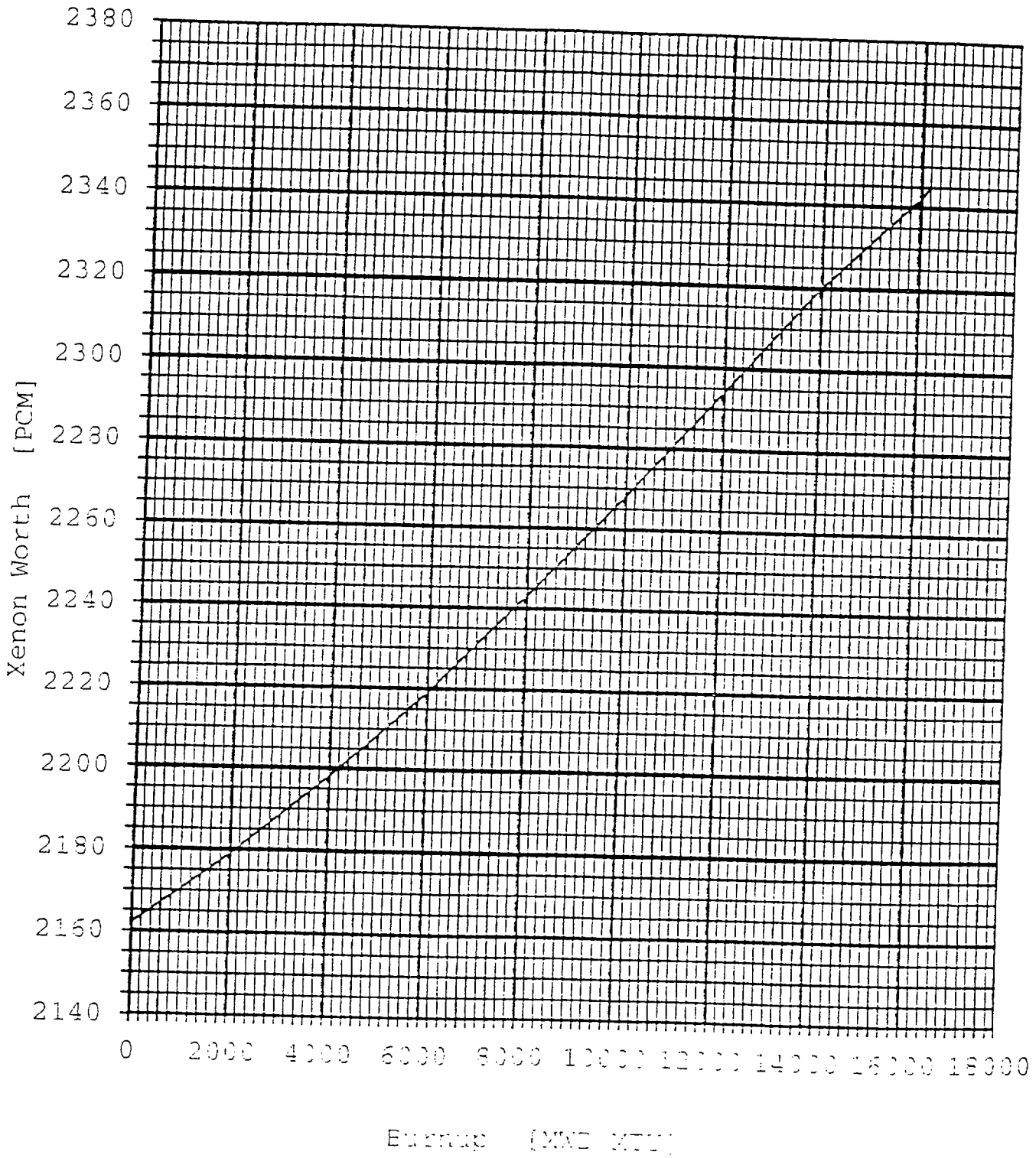

CYCLE 24, 0 MWD/MTU, NOXE, HZP, 1947 PPM, RODWORTH TABLES FOR OVERLAP DCB
KEWAUNEE NUCLEAR POWER PLANT
ACCUMULATED INTEGRAL ROD WORTH TABLES

STEPS W/D	(PCM)	STEPS W/D	(PCM)
GROUP D		GROUP D	
228	-0	148	-301
226	-1	146	-311
224	-2	144	-320
222	-4	142	-329
220	-6	140	-338
218	-10	138	-347
216	-14	136	-356
214	-18	134	-366
212	-24	132	-375
210	-29	130	-384
208	-36	128	-393
206	-42	126	-401
204	-49	124	-410
202	-57	122	-419
200	-64	120	-428
198	-72	118	-436
196	-81	116	-445
194	-89	114	-453
192	-98	112	-462
190	-106	110	-470
188	-115	108	-478
186	-124	106	-486
184	-133	104	-494
182	-142	102	-502
180	-152	GROUP C	
178	-161	100	228 -510
176	-170	98	226 -520
174	-180	96	224 -528
172	-189	94	222 -538
170	-198	92	220 -549
168	-208	90	218 -560
166	-217	88	216 -573
164	-227	86	214 -586
162	-236	84	212 -599
160	-245	82	210 -614
158	-255	80	208 -628
156	-264	78	206 -643
154	-273	76	204 -657
152	-283	74	202 -673
150	-292	72	200 -688

CYCLE 24, 0 MWD/MTU, NOXE, HZP, 1947 PPM, RODWORTH TABLES FOR OVERLAP DCB
KEWAUNEE NUCLEAR POWER PLANT
ACCUMULATED INTEGRAL ROD WORTH TABLES

STEPS W/D		(PCM)	STEPS W/D	(PCM)
GROUP D	GROUP C			
70	198	-704		
68	196	-719		
66	194	-735		
64	192	-751		
62	190	-766		
60	188	-782		
58	186	-797		
56	184	-813		
54	182	-828		
52	180	-843		
50	178	-858		
48	176	-873		
46	174	-888		
44	172	-902		
42	170	-917		
40	168	-931		
38	166	-945		
36	164	-959		
34	162	-972		
32	160	-986		
30	158	-999		
28	156	-1012		
26	154	-1025		
24	152	-1038		
22	150	-1051		
20	148	-1064		
18	146	-1077		
16	144	-1090		
14	142	-1103		
12	140	-1114		
10	138	-1127		
8	136	-1139		
6	134	-1151		
4	132	-1165		
2	130	-1177		
0	128	-1189		

IRPI VOLTAGES FOR ROD G11

ROD STEPS	DC VOLTAGES	AC VOLTAGES
0	-0.041	9.486
2	-0.005	
4	0.030	
6	0.065	
8	0.100	
10	0.135	
12	0.169	
14	0.204	
16	0.239	
18	0.273	
20	0.307	10.037
22	0.342	
24	0.376	
26	0.410	
28	0.444	
30	0.478	
32	0.512	
34	0.546	
36	0.579	
38	0.613	
40	0.646	10.573
42	0.680	
44	0.713	
46	0.746	
48	0.779	
50	0.813	
52	0.845	
54	0.878	
56	0.911	
58	0.944	
60	0.976	11.095
62	1.009	
64	1.041	
66	1.074	
68	1.106	
70	1.138	
72	1.170	
74	1.202	
76	1.234	
78	1.265	
80	1.297	11.603
82	1.329	
84	1.360	
86	1.392	
88	1.423	
90	1.454	
92	1.485	
94	1.516	
96	1.547	
98	1.578	
100	1.609	12.097
102	1.640	
104	1.670	
106	1.701	
108	1.731	
110	1.761	
112	1.792	
114	1.822	
116	1.852	
118	1.882	
120	1.912	12.576
122	1.941	
124	1.971	
126	2.001	
128	2.030	
130	2.059	
132	2.089	
134	2.118	
136	2.147	
138	2.176	
140	2.205	13.040
142	2.234	
144	2.263	
146	2.291	
148	2.320	
150	2.349	
152	2.377	
154	2.405	
156	2.433	
158	2.462	
160	2.490	13.490
162	2.518	
164	2.545	
166	2.573	
168	2.601	
170	2.629	
172	2.656	
174	2.683	
176	2.711	
178	2.738	
180	2.765	13.926
182	2.792	
184	2.819	
186	2.846	
188	2.873	
190	2.899	
192	2.926	
194	2.953	
196	2.979	
198	3.005	
200	3.032	14.348
202	3.058	
204	3.084	
206	3.110	
208	3.136	
210	3.161	
212	3.187	
214	3.213	
216	3.238	
218	3.263	
220	3.289	14.755
222	3.314	
224	3.339	
226	3.364	
228	3.389	
230	3.414	14.953

FIGURE TS 2.1-1

Safety Limits Reactor Core, Minimum Coolant System Flow (TS 3.10.m), Minimum DNBR

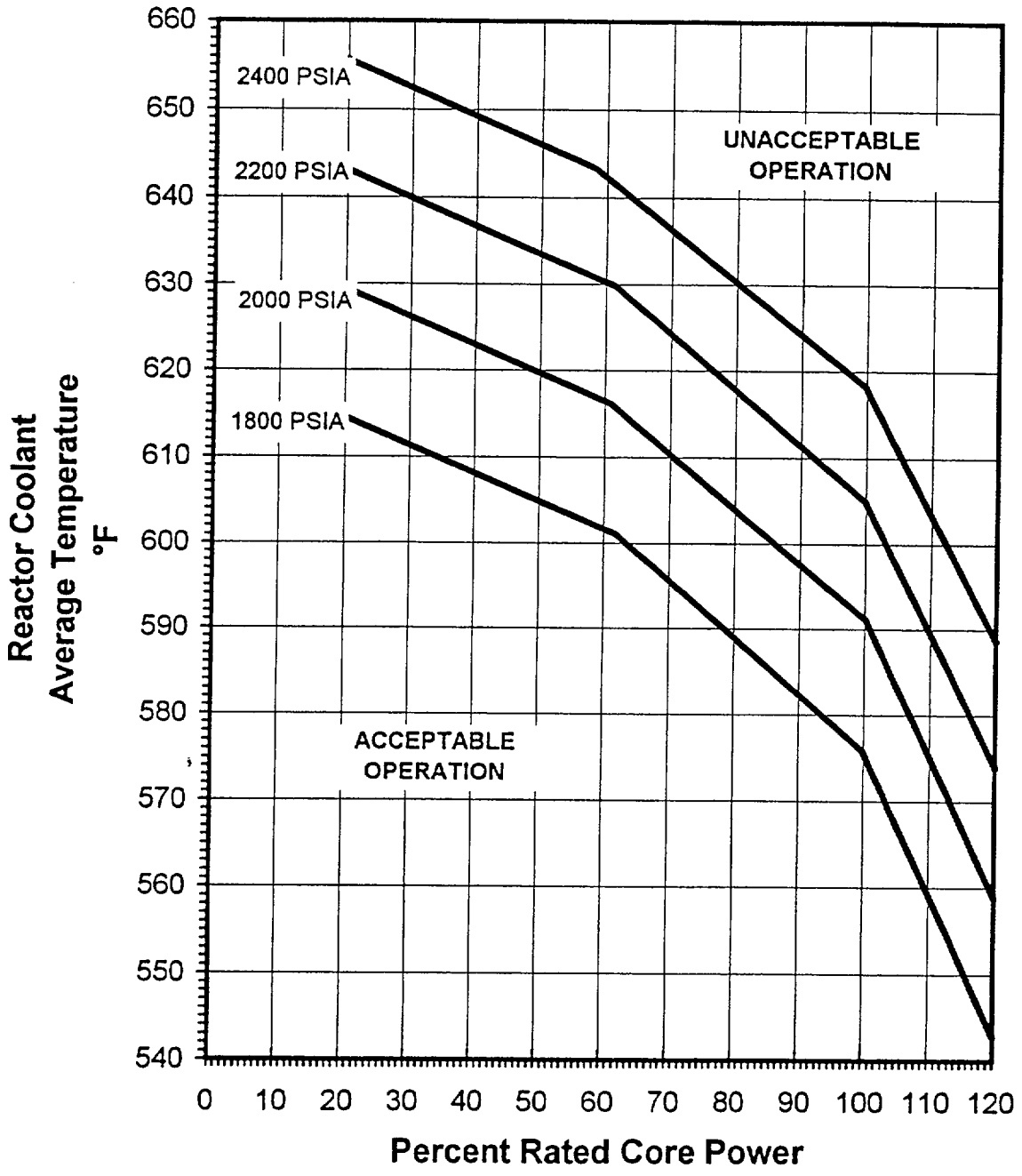

Amendment No. 142
12/02/98

Current ppm Boron	Gal. of Acid to Borate 1 ppm	Gal of Water to Dilute 1 ppm	Gal. of Acid to Borate 2 ppm	Gal of Water to Dilute 2 ppm	Gal. of Acid to Borate 5 ppm	Gal of Water to Dilute 5 ppm	Gal. of Acid to Borate 10 ppm	Gal of Water to Dilute 10 ppm	Gal. of Acid to Borate 20 ppm	Gal of Water to Dilute 20 ppm	Gal. of Acid to Borate 50 ppm	Gal of Water to Dilute 50 ppm	Gal. of Acid to Borate 100 ppm	Gal of Water to Dilute 100 ppm
1	2.52	-	5.0	-	12.6	-	25.2	-	50.5	-	126.3	-	253.1	-
2	2.52	24471	5.0	-	12.6	-	25.2	-	50.5	-	126.3	-	253.1	-
3	2.52	14315	5.0	38786	12.6	-	25.2	-	50.5	-	126.3	-	253.1	-
4	2.52	10157	5.0	24471	12.6	-	25.2	-	50.5	-	126.4	-	253.2	-
5	2.52	7878	5.0	18035	12.6	-	25.2	-	50.5	-	126.4	-	253.2	-
6	2.52	6437	5.0	14315	12.6	63258	25.2	-	50.5	-	126.4	-	253.2	-
7	2.52	5442	5.0	11879	12.6	44229	25.2	-	50.5	-	126.4	-	253.2	-
8	2.52	4714	5.0	10157	12.6	34628	25.2	-	50.5	-	126.4	-	253.2	-
9	2.52	4158	5.0	8873	12.6	28630	25.2	-	50.5	-	126.4	-	253.2	-
10	2.52	3720	5.0	7878	12.6	24471	25.2	-	50.5	-	126.4	-	253.3	-
11	2.52	3365	5.0	7085	12.6	21400	25.2	84657	50.5	-	126.4	-	253.3	-
12	2.52	3072	5.0	6437	12.6	19029	25.2	63258	50.5	-	126.4	-	253.3	-
13	2.52	2826	5.0	5898	12.6	17141	25.3	51769	50.5	-	126.4	-	253.3	-
14	2.52	2616	5.0	5442	12.6	15599	25.3	44229	50.5	-	126.4	-	253.3	-
15	2.52	2436	5.0	5052	12.6	14315	25.3	38786	50.5	-	126.5	-	253.4	-
16	2.52	2279	5.0	4714	12.6	13228	25.3	34628	50.5	-	126.5	-	253.4	-
17	2.52	2140	5.1	4419	12.6	12297	25.3	31326	50.5	-	126.5	-	253.4	-
18	2.53	2018	5.1	4158	12.6	11489	25.3	28630	50.5	-	126.5	-	253.4	-
19	2.53	1909	5.1	3927	12.6	10781	25.3	26380	50.5	-	126.5	-	253.4	-
20	2.53	1811	5.1	3720	12.6	10157	25.3	24471	50.5	-	126.5	-	253.4	-
21	2.53	1723	5.1	3533	12.6	9601	25.3	22829	50.5	107486	126.5	-	253.5	-
22	2.53	1642	5.1	3365	12.6	9103	25.3	21400	50.6	84657	126.5	-	253.5	-
23	2.53	1569	5.1	3212	12.6	8654	25.3	20143	50.6	71912	126.5	-	253.5	-
24	2.53	1503	5.1	3072	12.6	8248	25.3	19029	50.6	63258	126.5	-	253.5	-
25	2.53	1441	5.1	2944	12.6	7878	25.3	18035	50.6	56821	126.5	-	253.5	-
26	2.53	1385	5.1	2826	12.6	7540	25.3	17141	50.6	51769	126.5	-	253.6	-
27	2.53	1332	5.1	2717	12.6	7230	25.3	16333	50.6	47659	126.6	-	253.6	-
28	2.53	1284	5.1	2616	12.6	6945	25.3	15599	50.6	44229	126.6	-	253.6	-
29	2.53	1239	5.1	2523	12.6	6681	25.3	14929	50.6	41309	126.6	-	253.6	-
30	2.53	1197	5.1	2436	12.6	6437	25.3	14315	50.6	38786	126.6	-	253.6	-

Current ppm Boron	Gal. of Acid to Borate 1 ppm	Gal of Water to Dilute 1 ppm	Gal. of Acid to Borate 2 ppm	Gal of Water to Dilute 2 ppm	Gal. of Acid to Borate 5 ppm	Gal of Water to Dilute 5 ppm	Gal. of Acid to Borate 10 ppm	Gal of Water to Dilute 10 ppm	Gal. of Acid to Borate 20 ppm	Gal of Water to Dilute 20 ppm	Gal. of Acid to Borate 50 ppm	Gal of Water to Dilute 50 ppm	Gal. of Acid to Borate 100 ppm	Gal of Water to Dilute 100 ppm
31	2.53	1158	5.1	2355	12.6	6210	25.3	13750	50.6	36579	126.6	-	253.6	-
32	2.53	1121	5.1	2279	12.6	5998	25.3	13228	50.6	34628	126.6	-	253.7	-
33	2.53	1086	5.1	2207	12.6	5801	25.3	12746	50.6	32889	126.6	-	253.7	-
34	2.53	1054	5.1	2140	12.6	5616	25.3	12297	50.6	31326	126.6	-	253.7	-
35	2.53	1023	5.1	2077	12.6	5442	25.3	11879	50.6	29914	126.6	-	253.7	-
36	2.53	995	5.1	2018	12.6	5279	25.3	11489	50.6	28630	126.6	-	253.7	-
37	2.53	967	5.1	1962	12.6	5126	25.3	11124	50.6	27457	126.6	-	253.8	-
38	2.53	942	5.1	1909	12.6	4981	25.3	10781	50.6	26380	126.7	-	253.8	-
39	2.53	917	5.1	1859	12.6	4844	25.3	10460	50.6	25389	126.7	-	253.8	-
40	2.53	894	5.1	1811	12.6	4714	25.3	10157	50.6	24471	126.7	-	253.8	-
41	2.53	872	5.1	1766	12.6	4592	25.3	9871	50.6	23621	126.7	-	253.8	-
42	2.53	851	5.1	1723	12.6	4475	25.3	9601	50.6	22829	126.7	-	253.8	-
43	2.53	831	5.1	1682	12.6	4364	25.3	9345	50.6	22090	126.7	-	253.9	-
44	2.53	812	5.1	1642	12.7	4259	25.3	9103	50.6	21400	126.7	-	253.9	-
45	2.53	793	5.1	1605	12.7	4158	25.3	8873	50.6	20752	126.7	-	253.9	-
46	2.53	776	5.1	1569	12.7	4063	25.3	8654	50.6	20143	126.7	-	253.9	-
47	2.53	759	5.1	1535	12.7	3971	25.3	8446	50.6	19570	126.7	-	253.9	-
48	2.53	743	5.1	1503	12.7	3884	25.3	8248	50.6	19029	126.7	-	254.0	-
49	2.53	728	5.1	1471	12.7	3800	25.3	8059	50.6	18518	126.8	-	254.0	-
50	2.53	713	5.1	1441	12.7	3720	25.3	7878	50.7	18035	126.8	-	254.0	-
51	2.53	699	5.1	1412	12.7	3643	25.3	7705	50.7	17576	126.8	138813	254.0	-
52	2.53	686	5.1	1385	12.7	3569	25.3	7540	50.7	17141	126.8	115027	254.0	-
53	2.53	672	5.1	1358	12.7	3498	25.3	7382	50.7	16727	126.8	101384	254.0	-
54	2.53	660	5.1	1332	12.7	3430	25.3	7230	50.7	16333	126.8	91888	254.1	-
55	2.53	648	5.1	1308	12.7	3365	25.3	7085	50.7	15957	126.8	84657	254.1	-
56	2.53	636	5.1	1284	12.7	3302	25.3	6945	50.7	15599	126.8	78857	254.1	-
57	2.53	625	5.1	1261	12.7	3241	25.3	6810	50.7	15256	126.8	74039	254.1	-
58	2.53	614	5.1	1239	12.7	3183	25.3	6681	50.7	14929	126.8	69939	254.1	-
59	2.53	604	5.1	1218	12.7	3126	25.3	6557	50.7	14615	126.9	66384	254.2	-
60	2.53	593	5.1	1197	12.7	3072	25.3	6437	50.7	14315	126.9	63258	254.2	-

Current ppm Boron	Gal. of Acid to Borate 1 ppm	Gal of Water to Dilute 1 ppm	Gal. of Acid to Borate 2 ppm	Gal of Water to Dilute 2 ppm	Gal. of Acid to Borate 5 ppm	Gal of Water to Dilute 5 ppm	Gal. of Acid to Borate 10 ppm	Gal of Water to Dilute 10 ppm	Gal. of Acid to Borate 20 ppm	Gal of Water to Dilute 20 ppm	Gal. of Acid to Borate 50 ppm	Gal of Water to Dilute 50 ppm	Gal. of Acid to Borate 100 ppm	Gal of Water to Dilute 100 ppm
61	2.53	584	5.1	1177	12.7	3019	25.3	6321	50.7	14027	126.9	60476	254.2	-
62	2.53	574	5.1	1158	12.7	2969	25.3	6210	50.7	13750	126.9	57979	254.2	-
63	2.53	565	5.1	1139	12.7	2919	25.3	6102	50.7	13484	126.9	55718	254.2	-
64	2.53	556	5.1	1121	12.7	2872	25.3	5998	50.7	13228	126.9	53657	254.2	-
65	2.53	547	5.1	1103	12.7	2826	25.3	5898	50.7	12982	126.9	51769	254.3	-
66	2.53	539	5.1	1086	12.7	2781	25.3	5801	50.7	12746	126.9	50029	254.3	-
67	2.53	531	5.1	1070	12.7	2738	25.3	5707	50.7	12517	126.9	48420	254.3	-
68	2.53	523	5.1	1054	12.7	2696	25.3	5616	50.7	12297	126.9	46925	254.3	-
69	2.53	515	5.1	1038	12.7	2656	25.4	5528	50.7	12084	126.9	45532	254.3	-
70	2.53	508	5.1	1023	12.7	2616	25.4	5442	50.7	11879	127.0	44229	254.4	-
71	2.53	501	5.1	1009	12.7	2578	25.4	5359	50.7	11681	127.0	43007	254.4	-
72	2.53	494	5.1	995	12.7	2541	25.4	5279	50.7	11489	127.0	41858	254.4	-
73	2.54	487	5.1	981	12.7	2505	25.4	5201	50.7	11303	127.0	40776	254.4	-
74	2.54	480	5.1	967	12.7	2470	25.4	5126	50.7	11124	127.0	39754	254.4	-
75	2.54	474	5.1	954	12.7	2436	25.4	5052	50.7	10950	127.0	38786	254.5	-
76	2.54	468	5.1	942	12.7	2403	25.4	4981	50.7	10781	127.0	37869	254.5	-
77	2.54	462	5.1	929	12.7	2370	25.4	4911	50.8	10618	127.0	36998	254.5	-
78	2.54	456	5.1	917	12.7	2339	25.4	4844	50.8	10460	127.0	36170	254.5	-
79	2.54	450	5.1	905	12.7	2308	25.4	4778	50.8	10306	127.0	35381	254.5	-
80	2.54	444	5.1	894	12.7	2279	25.4	4714	50.8	10157	127.0	34628	254.5	-
81	2.54	439	5.1	883	12.7	2249	25.4	4652	50.8	10012	127.1	33909	254.6	-
82	2.54	433	5.1	872	12.7	2221	25.4	4592	50.8	9871	127.1	33221	254.6	-
83	2.54	428	5.1	861	12.7	2194	25.4	4532	50.8	9734	127.1	32563	254.6	-
84	2.54	423	5.1	851	12.7	2167	25.4	4475	50.8	9601	127.1	31932	254.6	-
85	2.54	418	5.1	841	12.7	2140	25.4	4419	50.8	9471	127.1	31326	254.6	-
86	2.54	413	5.1	831	12.7	2115	25.4	4364	50.8	9345	127.1	30744	254.7	-
87	2.54	408	5.1	821	12.7	2090	25.4	4311	50.8	9222	127.1	30185	254.7	-
88	2.54	403	5.1	812	12.7	2065	25.4	4259	50.8	9103	127.1	29647	254.7	-
89	2.54	399	5.1	802	12.7	2041	25.4	4208	50.8	8986	127.1	29129	254.7	-
90	2.54	394	5.1	793	12.7	2018	25.4	4158	50.8	8873	127.1	28630	254.7	-

Current ppm Boron	Gal. of Acid to Borate 1 ppm	Gal of Water to Dilute 1 ppm	Gal. of Acid to Borate 2 ppm	Gal of Water to Dilute 2 ppm	Gal. of Acid to Borate 5 ppm	Gal of Water to Dilute 5 ppm	Gal. of Acid to Borate 10 ppm	Gal of Water to Dilute 10 ppm	Gal. of Acid to Borate 20 ppm	Gal of Water to Dilute 20 ppm	Gal. of Acid to Borate 50 ppm	Gal of Water to Dilute 50 ppm	Gal. of Acid to Borate 100 ppm	Gal of Water to Dilute 100 ppm
91	2.54	390	5.1	785	12.7	1995	25.4	4110	50.8	8762	127.1	28148	254.7	-
92	2.54	386	5.1	776	12.7	1973	25.4	4063	50.8	8654	127.2	27683	254.8	-
93	2.54	382	5.1	768	12.7	1951	25.4	4016	50.8	8549	127.2	27234	254.8	-
94	2.54	378	5.1	759	12.7	1930	25.4	3971	50.8	8446	127.2	26800	254.8	-
95	2.54	374	5.1	751	12.7	1909	25.4	3927	50.8	8346	127.2	26380	254.8	-
96	2.54	370	5.1	743	12.7	1888	25.4	3884	50.8	8248	127.2	25974	254.8	-
97	2.54	366	5.1	736	12.7	1868	25.4	3841	50.8	8152	127.2	25581	254.9	-
98	2.54	362	5.1	728	12.7	1849	25.4	3800	50.8	8059	127.2	25199	254.9	-
99	2.54	358	5.1	721	12.7	1830	25.4	3759	50.8	7967	127.2	24830	254.9	-
100	2.54	355	5.1	713	12.7	1811	25.4	3720	50.8	7878	127.2	24471	254.9	-
102	2.54	348	5.1	699	12.7	1774	25.4	3643	50.8	7705	127.2	23786	254.9	138813
104	2.54	341	5.1	686	12.7	1740	25.4	3569	50.8	7540	127.3	23139	255.0	115027
106	2.54	335	5.1	672	12.7	1706	25.4	3498	50.9	7382	127.3	22528	255.0	101384
108	2.54	328	5.1	660	12.7	1674	25.4	3430	50.9	7230	127.3	21949	255.1	91888
110	2.54	322	5.1	648	12.7	1642	25.4	3365	50.9	7085	127.3	21400	255.1	84657
112	2.54	317	5.1	636	12.7	1612	25.4	3302	50.9	6945	127.3	20878	255.1	78857
114	2.54	311	5.1	625	12.7	1583	25.4	3241	50.9	6810	127.4	20382	255.2	74039
116	2.54	306	5.1	614	12.7	1556	25.4	3183	50.9	6681	127.4	19910	255.2	69939
118	2.54	300	5.1	604	12.7	1529	25.4	3126	50.9	6557	127.4	19459	255.2	66384
120	2.54	295	5.1	593	12.7	1503	25.4	3072	50.9	6437	127.4	19029	255.3	63258
122	2.54	291	5.1	584	12.7	1477	25.4	3019	50.9	6321	127.4	18618	255.3	60476
124	2.54	286	5.1	574	12.7	1453	25.5	2969	50.9	6210	127.4	18225	255.4	57979
126	2.54	281	5.1	565	12.7	1430	25.5	2919	50.9	6102	127.5	17848	255.4	55718
128	2.55	277	5.1	556	12.7	1407	25.5	2872	50.9	5998	127.5	17487	255.4	53657
130	2.55	273	5.1	547	12.7	1385	25.5	2826	50.9	5898	127.5	17141	255.5	51769
132	2.55	268	5.1	539	12.7	1363	25.5	2781	51.0	5801	127.5	16808	255.5	50029
134	2.55	264	5.1	531	12.7	1343	25.5	2738	51.0	5707	127.5	16488	255.5	48420
136	2.55	261	5.1	523	12.7	1322	25.5	2696	51.0	5616	127.6	16180	255.6	46925
138	2.55	257	5.1	515	12.7	1303	25.5	2656	51.0	5528	127.6	15884	255.6	45532
140	2.55	253	5.1	508	12.7	1284	25.5	2616	51.0	5442	127.6	15599	255.6	44229

Current ppm Boron	Gal. of Acid to Borate 1 ppm	Gal of Water to Dilute 1 ppm	Gal. of Acid to Borate 2 ppm	Gal of Water to Dilute 2 ppm	Gal. of Acid to Borate 5 ppm	Gal of Water to Dilute 5 ppm	Gal. of Acid to Borate 10 ppm	Gal of Water to Dilute 10 ppm	Gal. of Acid to Borate 20 ppm	Gal of Water to Dilute 20 ppm	Gal. of Acid to Borate 50 ppm	Gal of Water to Dilute 50 ppm	Gal. of Acid to Borate 100 ppm	Gal of Water to Dilute 100 ppm
142	2.55	250	5.1	501	12.7	1266	25.5	2578	51.0	5359	127.6	15324	255.7	43007
144	2.55	246	5.1	494	12.7	1248	25.5	2541	51.0	5279	127.6	15058	255.7	41858
146	2.55	243	5.1	487	12.7	1230	25.5	2505	51.0	5201	127.6	14802	255.8	40776
148	2.55	239	5.1	480	12.7	1213	25.5	2470	51.0	5126	127.7	14554	255.8	39754
150	2.55	236	5.1	474	12.7	1197	25.5	2436	51.0	5052	127.7	14315	255.8	38786
152	2.55	233	5.1	468	12.7	1181	25.5	2403	51.0	4981	127.7	14083	255.9	37869
154	2.55	230	5.1	462	12.8	1165	25.5	2370	51.0	4911	127.7	13859	255.9	36998
156	2.55	227	5.1	456	12.8	1150	25.5	2339	51.0	4844	127.7	13642	255.9	36170
158	2.55	224	5.1	450	12.8	1135	25.5	2308	51.0	4778	127.8	13432	256.0	35381
160	2.55	221	5.1	444	12.8	1121	25.5	2279	51.1	4714	127.8	13228	256.0	34628
162	2.55	219	5.1	439	12.8	1107	25.5	2249	51.1	4652	127.8	13031	256.1	33909
164	2.55	216	5.1	433	12.8	1093	25.5	2221	51.1	4592	127.8	12839	256.1	33221
166	2.55	213	5.1	428	12.8	1080	25.5	2194	51.1	4532	127.8	12653	256.1	32563
168	2.55	211	5.1	423	12.8	1067	25.5	2167	51.1	4475	127.9	12472	256.2	31932
170	2.55	208	5.1	418	12.8	1054	25.5	2140	51.1	4419	127.9	12297	256.2	31326
172	2.55	206	5.1	413	12.8	1042	25.5	2115	51.1	4364	127.9	12126	256.2	30744
174	2.55	203	5.1	408	12.8	1029	25.5	2090	51.1	4311	127.9	11960	256.3	30185
176	2.55	201	5.1	403	12.8	1018	25.5	2065	51.1	4259	127.9	11799	256.3	29647
178	2.55	199	5.1	399	12.8	1006	25.6	2041	51.1	4208	127.9	11642	256.4	29129
180	2.55	197	5.1	394	12.8	995	25.6	2018	51.1	4158	128.0	11489	256.4	28630
182	2.56	195	5.1	390	12.8	983	25.6	1995	51.1	4110	128.0	11340	256.4	28148
184	2.56	192	5.1	386	12.8	973	25.6	1973	51.1	4063	128.0	11195	256.5	27683
186	2.56	190	5.1	382	12.8	962	25.6	1951	51.2	4016	128.0	11054	256.5	27234
188	2.56	188	5.1	378	12.8	952	25.6	1930	51.2	3971	128.0	10916	256.5	26800
190	2.56	186	5.1	374	12.8	942	25.6	1909	51.2	3927	128.1	10781	256.6	26380
192	2.56	184	5.1	370	12.8	932	25.6	1888	51.2	3884	128.1	10650	256.6	25974
194	2.56	182	5.1	366	12.8	922	25.6	1868	51.2	3841	128.1	10522	256.7	25581
196	2.56	181	5.1	362	12.8	912	25.6	1849	51.2	3800	128.1	10398	256.7	25199
198	2.56	179	5.1	358	12.8	903	25.6	1830	51.2	3759	128.1	10276	256.7	24830
200	2.56	177	5.1	355	12.8	894	25.6	1811	51.2	3720	128.1	10157	256.8	24471

Current ppm Boron	Gal. of Acid to Borate 1 ppm	Gal of Water to Dilute 1 ppm	Gal. of Acid to Borate 2 ppm	Gal of Water to Dilute 2 ppm	Gal. of Acid to Borate 5 ppm	Gal of Water to Dilute 5 ppm	Gal. of Acid to Borate 10 ppm	Gal of Water to Dilute 10 ppm	Gal. of Acid to Borate 20 ppm	Gal of Water to Dilute 20 ppm	Gal. of Acid to Borate 50 ppm	Gal of Water to Dilute 50 ppm	Gal. of Acid to Borate 100 ppm	Gal of Water to Dilute 100 ppm
205	2.56	173	5.1	346	12.8	872	25.6	1766	51.2	3624	128.2	9871	256.9	23621
210	2.56	169	5.1	338	12.8	851	25.6	1723	51.2	3533	128.2	9601	257.0	22829
215	2.56	165	5.1	330	12.8	831	25.6	1682	51.3	3447	128.3	9345	257.0	22090
220	2.56	161	5.1	322	12.8	812	25.6	1642	51.3	3365	128.3	9103	257.1	21400
225	2.56	157	5.1	315	12.8	793	25.6	1605	51.3	3287	128.4	8873	257.2	20752
230	2.56	154	5.1	308	12.8	776	25.6	1569	51.3	3212	128.4	8654	257.3	20143
235	2.56	151	5.1	302	12.8	759	25.7	1535	51.3	3140	128.5	8446	257.4	19570
240	2.57	147	5.1	295	12.8	743	25.7	1503	51.4	3072	128.5	8248	257.5	19029
245	2.57	144	5.1	289	12.8	728	25.7	1471	51.4	3006	128.6	8059	257.6	18518
250	2.57	142	5.1	284	12.8	713	25.7	1441	51.4	2944	128.6	7878	257.7	18035
255	2.57	139	5.1	278	12.8	699	25.7	1412	51.4	2884	128.7	7705	257.8	17576
260	2.57	136	5.1	273	12.8	686	25.7	1385	51.4	2826	128.7	7540	257.9	17141
265	2.57	133	5.1	267	12.9	672	25.7	1358	51.4	2770	128.8	7382	258.0	16727
270	2.57	131	5.1	262	12.9	660	25.7	1332	51.5	2717	128.8	7230	258.1	16333
275	2.57	129	5.1	258	12.9	648	25.7	1308	51.5	2666	128.8	7085	258.2	15957
280	2.57	126	5.1	253	12.9	636	25.7	1284	51.5	2616	128.9	6945	258.3	15599
285	2.57	124	5.1	249	12.9	625	25.8	1261	51.5	2569	128.9	6810	258.4	15256
290	2.58	122	5.2	244	12.9	614	25.8	1239	51.5	2523	129.0	6681	258.5	14929
295	2.58	120	5.2	240	12.9	604	25.8	1218	51.6	2479	129.0	6557	258.6	14615
300	2.58	118	5.2	236	12.9	593	25.8	1197	51.6	2436	129.1	6437	258.6	14315
305	2.58	116	5.2	232	12.9	584	25.8	1177	51.6	2394	129.1	6321	258.7	14027
310	2.58	114	5.2	229	12.9	574	25.8	1158	51.6	2355	129.2	6210	258.8	13750
315	2.58	112	5.2	225	12.9	565	25.8	1139	51.6	2316	129.2	6102	258.9	13484
320	2.58	111	5.2	221	12.9	556	25.8	1121	51.7	2279	129.3	5998	259.0	13228
325	2.58	109	5.2	218	12.9	547	25.8	1103	51.7	2242	129.3	5898	259.1	12982
330	2.58	107	5.2	215	12.9	539	25.8	1086	51.7	2207	129.4	5801	259.2	12746
335	2.58	106	5.2	211	12.9	531	25.8	1070	51.7	2173	129.4	5707	259.3	12517
340	2.58	104	5.2	208	12.9	523	25.9	1054	51.7	2140	129.5	5616	259.4	12297
345	2.59	102	5.2	205	12.9	515	25.9	1038	51.7	2108	129.5	5528	259.5	12084
350	2.59	101	5.2	202	12.9	508	25.9	1023	51.8	2077	129.6	5442	259.6	11879

Current ppm Boron	Gal. of Acid to Borate 1 ppm	Gal of Water to Dilute 1 ppm	Gal. of Acid to Borate 2 ppm	Gal of Water to Dilute 2 ppm	Gal. of Acid to Borate 5 ppm	Gal of Water to Dilute 5 ppm	Gal. of Acid to Borate 10 ppm	Gal of Water to Dilute 10 ppm	Gal. of Acid to Borate 20 ppm	Gal of Water to Dilute 20 ppm	Gal. of Acid to Borate 50 ppm	Gal of Water to Dilute 50 ppm	Gal. of Acid to Borate 100 ppm	Gal of Water to Dilute 100 ppm
355	2.59	100	5.2	199	12.9	501	25.9	1009	51.8	2047	129.6	5359	259.7	11681
360	2.59	98	5.2	197	12.9	494	25.9	995	51.8	2018	129.7	5279	259.8	11489
365	2.59	97	5.2	194	12.9	487	25.9	981	51.8	1990	129.7	5201	259.9	11303
370	2.59	96	5.2	191	13.0	480	25.9	967	51.8	1962	129.7	5126	260.0	11124
375	2.59	94	5.2	189	13.0	474	25.9	954	51.9	1935	129.8	5052	260.1	10950
380	2.59	93	5.2	186	13.0	468	25.9	942	51.9	1909	129.8	4981	260.2	10781
385	2.59	92	5.2	184	13.0	462	25.9	929	51.9	1883	129.9	4911	260.3	10618
390	2.59	91	5.2	182	13.0	456	25.9	917	51.9	1859	129.9	4844	260.4	10460
395	2.60	89	5.2	179	13.0	450	26.0	905	51.9	1834	130.0	4778	260.5	10306
400	2.60	88	5.2	177	13.0	444	26.0	894	52.0	1811	130.0	4714	260.6	10157
405	2.60	87	5.2	175	13.0	439	26.0	883	52.0	1788	130.1	4652	260.6	10012
410	2.60	86	5.2	173	13.0	433	26.0	872	52.0	1766	130.1	4592	260.7	9871
415	2.60	85	5.2	171	13.0	428	26.0	861	52.0	1744	130.2	4532	260.8	9734
420	2.60	84	5.2	169	13.0	423	26.0	851	52.0	1723	130.2	4475	260.9	9601
425	2.60	83	5.2	167	13.0	418	26.0	841	52.1	1702	130.3	4419	261.0	9471
430	2.60	82	5.2	165	13.0	413	26.0	831	52.1	1682	130.3	4364	261.1	9345
435	2.60	81	5.2	163	13.0	408	26.0	821	52.1	1662	130.4	4311	261.2	9222
440	2.60	80	5.2	161	13.0	403	26.0	812	52.1	1642	130.4	4259	261.3	9103
445	2.60	79	5.2	159	13.0	399	26.1	802	52.1	1623	130.5	4208	261.4	8986
450	2.61	79	5.2	157	13.0	394	26.1	793	52.1	1605	130.5	4158	261.5	8873
455	2.61	78	5.2	156	13.0	390	26.1	785	52.2	1587	130.6	4110	261.6	8762
460	2.61	77	5.2	154	13.0	386	26.1	776	52.2	1569	130.6	4063	261.7	8654
465	2.61	76	5.2	152	13.0	382	26.1	768	52.2	1552	130.7	4016	261.8	8549
470	2.61	75	5.2	151	13.0	378	26.1	759	52.2	1535	130.7	3971	261.9	8446
475	2.61	74	5.2	149	13.1	374	26.1	751	52.2	1519	130.8	3927	262.0	8346
480	2.61	74	5.2	147	13.1	370	26.1	743	52.3	1503	130.8	3884	262.1	8248
485	2.61	73	5.2	146	13.1	366	26.1	736	52.3	1487	130.9	3841	262.2	8152
490	2.61	72	5.2	144	13.1	362	26.1	728	52.3	1471	130.9	3800	262.3	8059
495	2.61	71	5.2	143	13.1	358	26.2	721	52.3	1456	131.0	3759	262.4	7967
500	2.62	71	5.2	142	13.1	355	26.2	713	52.3	1441	131.0	3720	262.5	7878

Current ppm Boron	Gal. of Acid to Borate 1 ppm	Gal of Water to Dilute 1 ppm	Gal. of Acid to Borate 2 ppm	Gal of Water to Dilute 2 ppm	Gal. of Acid to Borate 5 ppm	Gal of Water to Dilute 5 ppm	Gal. of Acid to Borate 10 ppm	Gal of Water to Dilute 10 ppm	Gal. of Acid to Borate 20 ppm	Gal of Water to Dilute 20 ppm	Gal. of Acid to Borate 50 ppm	Gal of Water to Dilute 50 ppm	Gal. of Acid to Borate 100 ppm	Gal of Water to Dilute 100 ppm
510	2.62	69	5.2	139	13.1	348	26.2	699	52.4	1412	131.1	3643	262.7	7705
520	2.62	68	5.2	136	13.1	341	26.2	686	52.4	1385	131.2	3569	262.9	7540
530	2.62	67	5.2	133	13.1	335	26.2	672	52.5	1358	131.3	3498	263.1	7382
540	2.62	65	5.2	131	13.1	328	26.2	660	52.5	1332	131.4	3430	263.3	7230
550	2.62	64	5.3	129	13.1	322	26.3	648	52.5	1308	131.5	3365	263.5	7085
560	2.63	63	5.3	126	13.1	317	26.3	636	52.6	1284	131.6	3302	263.7	6945
570	2.63	62	5.3	124	13.1	311	26.3	625	52.6	1261	131.7	3241	263.9	6810
580	2.63	61	5.3	122	13.2	306	26.3	614	52.7	1239	131.8	3183	264.1	6681
590	2.63	60	5.3	120	13.2	300	26.3	604	52.7	1218	131.9	3126	264.3	6557
600	2.63	59	5.3	118	13.2	295	26.4	593	52.7	1197	132.0	3072	264.5	6437
610	2.64	58	5.3	116	13.2	291	26.4	584	52.8	1177	132.1	3019	264.7	6321
620	2.64	57	5.3	114	13.2	286	26.4	574	52.8	1158	132.2	2969	264.9	6210
630	2.64	56	5.3	112	13.2	281	26.4	565	52.9	1139	132.3	2919	265.1	6102
640	2.64	55	5.3	111	13.2	277	26.4	556	52.9	1121	132.4	2872	265.3	5998
650	2.64	54	5.3	109	13.2	273	26.5	547	52.9	1103	132.5	2826	265.5	5898
660	2.65	54	5.3	107	13.2	268	26.5	539	53.0	1086	132.6	2781	265.7	5801
670	2.65	53	5.3	106	13.2	264	26.5	531	53.0	1070	132.7	2738	265.9	5707
680	2.65	52	5.3	104	13.3	261	26.5	523	53.1	1054	132.8	2696	266.1	5616
690	2.65	51	5.3	102	13.3	257	26.5	515	53.1	1038	132.9	2656	266.3	5528
700	2.65	50	5.3	101	13.3	253	26.6	508	53.1	1023	133.0	2616	266.5	5442
710	2.66	50	5.3	100	13.3	250	26.6	501	53.2	1009	133.1	2578	266.7	5359
720	2.66	49	5.3	98	13.3	246	26.6	494	53.2	995	133.2	2541	266.9	5279
730	2.66	48	5.3	97	13.3	243	26.6	487	53.3	981	133.3	2505	267.1	5201
740	2.66	48	5.3	96	13.3	239	26.6	480	53.3	967	133.4	2470	267.3	5126
750	2.66	47	5.3	94	13.3	236	26.7	474	53.3	954	133.5	2436	267.5	5052
760	2.67	46	5.3	93	13.3	233	26.7	468	53.4	942	133.6	2403	267.7	4981
770	2.67	46	5.3	92	13.3	230	26.7	462	53.4	929	133.7	2370	267.9	4911
780	2.67	45	5.3	91	13.4	227	26.7	456	53.5	917	133.8	2339	268.1	4844
790	2.67	45	5.3	89	13.4	224	26.7	450	53.5	905	133.9	2308	268.3	4778
800	2.67	44	5.3	88	13.4	221	26.8	444	53.5	894	134.0	2279	268.5	4714

Current ppm Boron	Gal. of Acid to Borate 1 ppm	Gal of Water to Dilute 1 ppm	Gal. of Acid to Borate 2 ppm	Gal of Water to Dilute 2 ppm	Gal. of Acid to Borate 5 ppm	Gal of Water to Dilute 5 ppm	Gal. of Acid to Borate 10 ppm	Gal of Water to Dilute 10 ppm	Gal. of Acid to Borate 20 ppm	Gal of Water to Dilute 20 ppm	Gal. of Acid to Borate 50 ppm	Gal of Water to Dilute 50 ppm	Gal. of Acid to Borate 100 ppm	Gal of Water to Dilute 100 ppm
810	2.68	44	5.4	87	13.4	219	26.8	439	53.6	883	134.1	2249	268.7	4652
820	2.68	43	5.4	86	13.4	216	26.8	433	53.6	872	134.2	2221	268.9	4592
830	2.68	43	5.4	85	13.4	213	26.8	428	53.7	861	134.3	2194	269.1	4532
840	2.68	42	5.4	84	13.4	211	26.8	423	53.7	851	134.4	2167	269.3	4475
850	2.68	42	5.4	83	13.4	208	26.9	418	53.7	841	134.5	2140	269.5	4419
860	2.69	41	5.4	82	13.4	206	26.9	413	53.8	831	134.6	2115	269.7	4364
870	2.69	41	5.4	81	13.4	203	26.9	408	53.8	821	134.7	2090	269.9	4311
880	2.69	40	5.4	80	13.5	201	26.9	403	53.9	812	134.8	2065	270.1	4259
890	2.69	40	5.4	79	13.5	199	26.9	399	53.9	802	134.9	2041	270.3	4208
900	2.70	39	5.4	79	13.5	197	27.0	394	53.9	793	135.0	2018	270.5	4158
910	2.70	39	5.4	78	13.5	195	27.0	390	54.0	785	135.1	1995	270.7	4110
920	2.70	38	5.4	77	13.5	192	27.0	386	54.0	776	135.2	1973	271.0	4063
930	2.70	38	5.4	76	13.5	190	27.0	382	54.1	768	135.3	1951	271.2	4016
940	2.70	38	5.4	75	13.5	188	27.0	378	54.1	759	135.4	1930	271.4	3971
950	2.71	37	5.4	74	13.5	186	27.1	374	54.1	751	135.5	1909	271.6	3927
960	2.71	37	5.4	74	13.5	184	27.1	370	54.2	743	135.6	1888	271.8	3884
970	2.71	36	5.4	73	13.6	182	27.1	366	54.2	736	135.7	1868	272.0	3841
980	2.71	36	5.4	72	13.6	181	27.1	362	54.3	728	135.8	1849	272.2	3800
990	2.71	36	5.4	71	13.6	179	27.1	358	54.3	721	135.9	1830	272.4	3759
1000	2.72	35	5.4	71	13.6	177	27.2	355	54.4	713	136.0	1811	272.6	3720
1020	2.72	35	5.4	69	13.6	173	27.2	348	54.4	699	136.3	1774	273.0	3643
1040	2.72	34	5.4	68	13.6	170	27.3	341	54.5	686	136.5	1740	273.5	3569
1060	2.73	33	5.5	67	13.6	167	27.3	335	54.6	672	136.7	1706	273.9	3498
1080	2.73	33	5.5	65	13.7	164	27.3	328	54.7	660	136.9	1674	274.3	3430
1100	2.74	32	5.5	64	13.7	161	27.4	322	54.8	648	137.1	1642	274.7	3365
1120	2.74	32	5.5	63	13.7	158	27.4	317	54.9	636	137.3	1612	275.2	3302
1140	2.75	31	5.5	62	13.7	155	27.5	311	54.9	625	137.5	1583	275.6	3241
1160	2.75	30	5.5	61	13.8	153	27.5	306	55.0	614	137.7	1556	276.0	3183
1180	2.75	30	5.5	60	13.8	150	27.5	300	55.1	604	138.0	1529	276.5	3126
1200	2.76	29	5.5	59	13.8	147	27.6	295	55.2	593	138.2	1503	276.9	3072

Current ppm Boron	Gal. of Acid to Borate 1 ppm	Gal of Water to Dilute 1 ppm	Gal. of Acid to Borate 2 ppm	Gal of Water to Dilute 2 ppm	Gal. of Acid to Borate 5 ppm	Gal of Water to Dilute 5 ppm	Gal. of Acid to Borate 10 ppm	Gal of Water to Dilute 10 ppm	Gal. of Acid to Borate 20 ppm	Gal of Water to Dilute 20 ppm	Gal. of Acid to Borate 50 ppm	Gal of Water to Dilute 50 ppm	Gal. of Acid to Borate 100 ppm	Gal of Water to Dilute 100 ppm
1220	2.76	29	5.5	58	13.8	145	27.6	291	55.3	584	138.4	1477	277.3	3019
1240	2.77	28	5.5	57	13.8	143	27.7	286	55.4	574	138.6	1453	277.8	2969
1260	2.77	28	5.5	56	13.9	140	27.7	281	55.5	565	138.8	1430	278.2	2919
1280	2.78	28	5.6	55	13.9	138	27.8	277	55.6	556	139.1	1407	278.7	2872
1300	2.78	27	5.6	54	13.9	136	27.8	273	55.6	547	139.3	1385	279.1	2826
1320	2.78	27	5.6	54	13.9	134	27.9	268	55.7	539	139.5	1363	279.5	2781
1340	2.79	26	5.6	53	13.9	132	27.9	264	55.8	531	139.7	1343	280.0	2738
1360	2.79	26	5.6	52	14.0	130	27.9	261	55.9	523	139.9	1322	280.4	2696
1380	2.80	26	5.6	51	14.0	128	28.0	257	56.0	515	140.2	1303	280.9	2656
1400	2.80	25	5.6	50	14.0	126	28.0	253	56.1	508	140.4	1284	281.3	2616
1420	2.81	25	5.6	50	14.0	125	28.1	250	56.2	501	140.6	1266	281.8	2578
1440	2.81	25	5.6	49	14.1	123	28.1	246	56.3	494	140.8	1248	282.2	2541
1460	2.82	24	5.6	48	14.1	121	28.2	243	56.4	487	141.1	1230	282.7	2505
1480	2.82	24	5.6	48	14.1	119	28.2	239	56.4	480	141.3	1213	283.1	2470
1500	2.82	24	5.6	47	14.1	118	28.3	236	56.5	474	141.5	1197	283.6	2436
1520	2.83	23	5.7	46	14.1	116	28.3	233	56.6	468	141.7	1181	284.0	2403
1540	2.83	23	5.7	46	14.2	115	28.3	230	56.7	462	142.0	1165	284.5	2370
1560	2.84	23	5.7	45	14.2	113	28.4	227	56.8	456	142.2	1150	284.9	2339
1580	2.84	22	5.7	45	14.2	112	28.4	224	56.9	450	142.4	1135	285.4	2308
1600	2.85	22	5.7	44	14.2	111	28.5	221	57.0	444	142.6	1121	285.9	2279
1620	2.85	22	5.7	44	14.3	109	28.5	219	57.1	439	142.9	1107	286.3	2249
1640	2.86	22	5.7	43	14.3	108	28.6	216	57.2	433	143.1	1093	286.8	2221
1660	2.86	21	5.7	43	14.3	107	28.6	213	57.3	428	143.3	1080	287.3	2194
1680	2.87	21	5.7	42	14.3	105	28.7	211	57.4	423	143.6	1067	287.7	2167
1700	2.87	21	5.7	42	14.4	104	28.7	208	57.5	418	143.8	1054	288.2	2140
1720	2.88	21	5.8	41	14.4	103	28.8	206	57.5	413	144.0	1042	288.7	2115
1740	2.88	20	5.8	41	14.4	102	28.8	203	57.6	408	144.3	1029	289.1	2090
1760	2.88	20	5.8	40	14.4	100	28.9	201	57.7	403	144.5	1018	289.6	2065
1780	2.89	20	5.8	40	14.4	99	28.9	199	57.8	399	144.8	1006	290.1	2041
1800	2.89	20	5.8	39	14.5	98	29.0	197	57.9	394	145.0	995	290.6	2018

Current ppm Boron	Gal. of Acid to Borate 1 ppm	Gal of Water to Dilute 1 ppm	Gal. of Acid to Borate 2 ppm	Gal of Water to Dilute 2 ppm	Gal. of Acid to Borate 5 ppm	Gal of Water to Dilute 5 ppm	Gal. of Acid to Borate 10 ppm	Gal of Water to Dilute 10 ppm	Gal. of Acid to Borate 20 ppm	Gal of Water to Dilute 20 ppm	Gal. of Acid to Borate 50 ppm	Gal of Water to Dilute 50 ppm	Gal. of Acid to Borate 100 ppm	Gal of Water to Dilute 100 ppm
1820	2.90	19	5.8	39	14.5	97	29.0	195	58.0	390	145.2	983	291.1	1995
1840	2.90	19	5.8	38	14.5	96	29.0	192	58.1	386	145.5	973	291.5	1973
1860	2.91	19	5.8	38	14.5	95	29.1	190	58.2	382	145.7	962	292.0	1951
1880	2.91	19	5.8	38	14.6	94	29.1	188	58.3	378	145.9	952	292.5	1930
1900	2.92	19	5.8	37	14.6	93	29.2	186	58.4	374	146.2	942	293.0	1909
1920	2.92	18	5.8	37	14.6	92	29.2	184	58.5	370	146.4	932	293.5	1888
1940	2.93	18	5.9	36	14.6	91	29.3	182	58.6	366	146.7	922	294.0	1868
1960	2.93	18	5.9	36	14.7	90	29.3	181	58.7	362	146.9	912	294.5	1849
1980	2.94	18	5.9	36	14.7	89	29.4	179	58.8	358	147.2	903	294.9	1830
2000	2.94	18	5.9	35	14.7	88	29.4	177	58.9	355	147.4	894	295.4	1811
2050	2.95	17	5.9	34	14.8	86	29.6	173	59.1	346	148.0	872	296.7	1766
2100	2.97	17	5.9	34	14.8	84	29.7	169	59.4	338	148.7	851	297.9	1723
2150	2.98	16	6.0	33	14.9	82	29.8	165	59.6	330	149.3	831	299.2	1682
2200	2.99	16	6.0	32	15.0	80	29.9	161	59.9	322	149.9	812	300.5	1642
2250	3.00	16	6.0	31	15.0	79	30.1	157	60.1	315	150.6	793	301.8	1605
2300	3.02	15	6.0	31	15.1	77	30.2	154	60.4	308	151.2	776	303.0	1569
2350	3.03	15	6.1	30	15.2	75	30.3	151	60.7	302	151.8	759	304.4	1535
2400	3.04	15	6.1	29	15.2	74	30.4	147	60.9	295	152.5	743	305.7	1503
2450	3.06	14	6.1	29	15.3	72	30.6	144	61.2	289	153.2	728	307.0	1471
2500	3.07	14	6.1	28	15.4	71	30.7	142	61.5	284	153.8	713	308.3	1441
2550	3.08	14	6.2	28	15.4	69	30.8	139	61.7	278	154.5	699	309.7	1412
2600	3.10	14	6.2	27	15.5	68	31.0	136	62.0	273	155.2	686	311.1	1385
2650	3.11	13	6.2	27	15.6	67	31.1	133	62.3	267	155.9	672	312.4	1358
2700	3.12	13	6.2	26	15.6	65	31.3	131	62.5	262	156.6	660	313.8	1332
2750	3.14	13	6.3	26	15.7	64	31.4	129	62.8	258	157.3	648	315.2	1308
2800	3.15	13	6.3	25	15.8	63	31.5	126	63.1	253	158.0	636	316.6	1284
2850	3.17	12	6.3	25	15.8	62	31.7	124	63.4	249	158.7	625	318.1	1261
2900	3.18	12	6.4	24	15.9	61	31.8	122	63.7	244	159.4	614	319.5	1239
2950	3.20	12	6.4	24	16.0	60	32.0	120	64.0	240	160.1	604	321.0	1218
3000	3.21	12	6.4	24	16.1	59	32.1	118	64.2	236	160.8	593	322.4	1197

WISCONSIN PUBLIC SERVICE CORPORATION	NO. F-0.1	REV B
KEWAUNEE NUCLEAR POWER PLANT	TITLE SUBCRITICALITY	
EMERGENCY OPERATING PROCEDURES	DATE MAY 1 1991	PAGE 1 of 1
REVIEWED BY D. Braun	APPROVED BY M L Marchi	

NUCLEAR SAFETY RELATED	☒ YES ☐ NO	PORC REVIEW REQUIRED	☒ YES ☐ NO	SRO APPROVAL OF TEMPORARY CHANGES REQUIRED	☒ YES ☐ NO

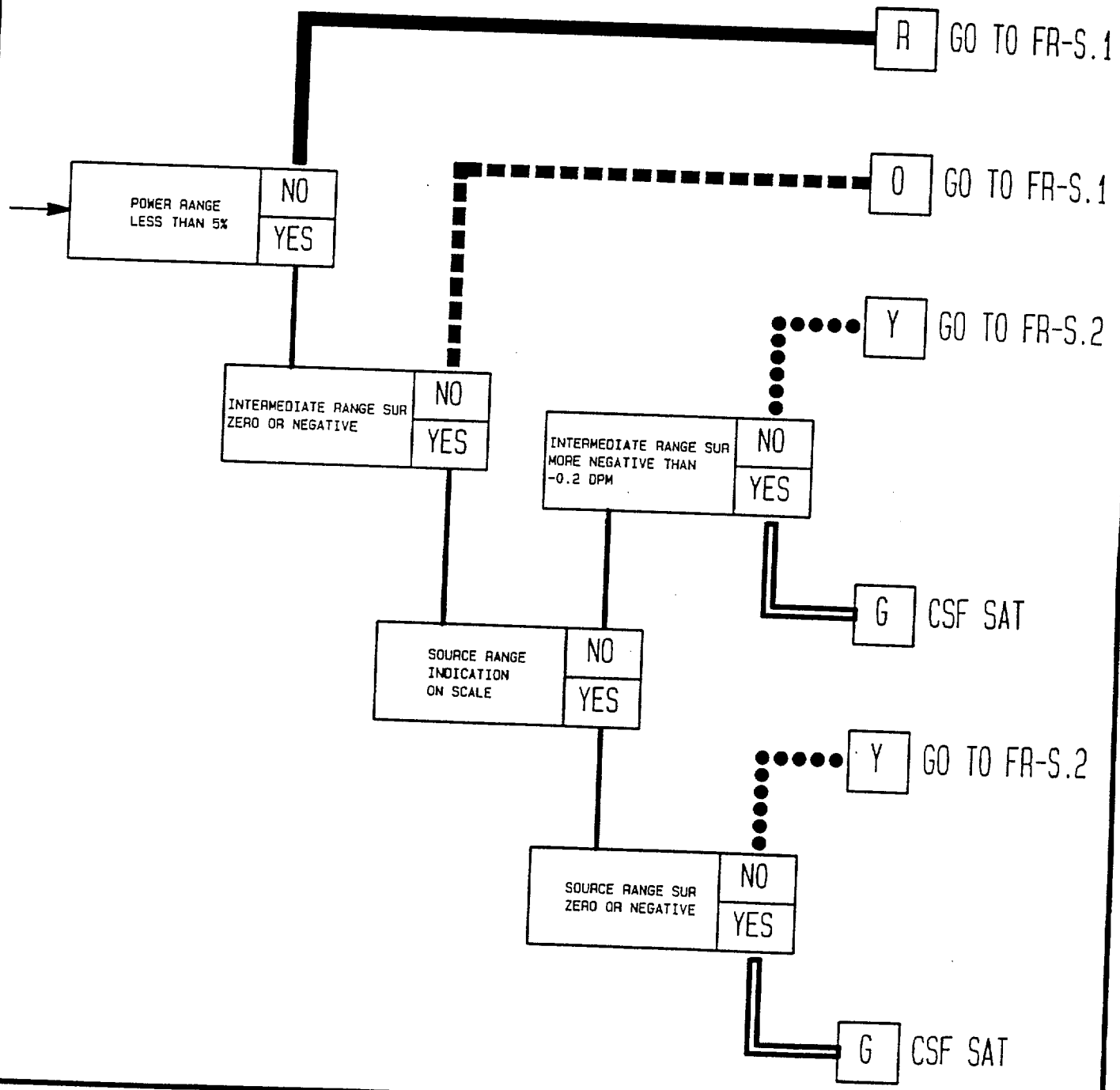

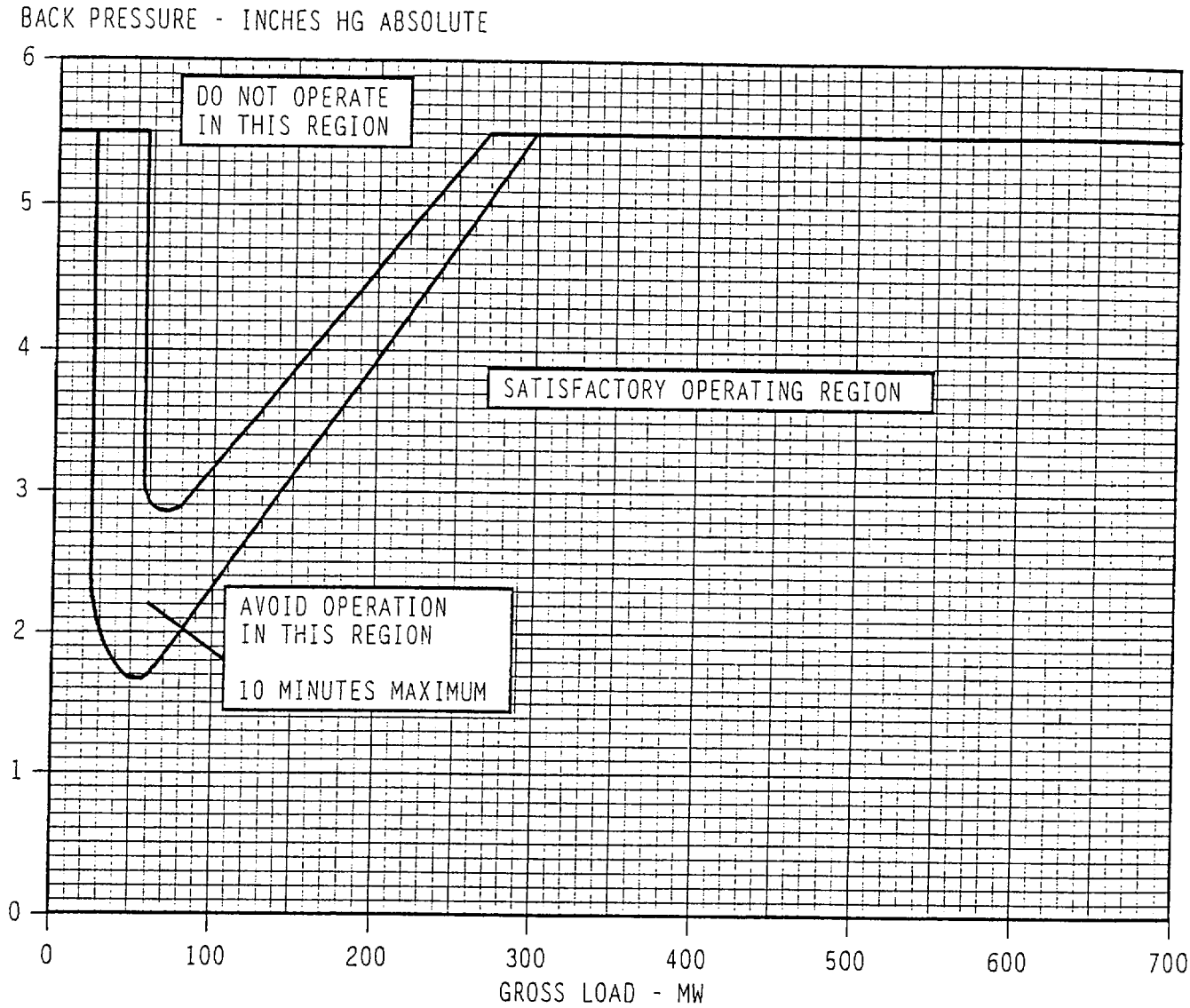

NOTE: IF entering "Avoid Region" can NOT be prevented, THEN do NOT operate in region for longer than 10 minutes.

NOTE: Operation is NOT allowed in "Do Not Operate Region".

Figure 1 - OPERATING REGIONS BASED ON CONDENSER BACK PRESSURE

SRO Provided References

1. Rx Data Manual 9.1.2
2. Rx Data Manual 9.2
3. Rx Data Manual 5.1.1.1
4. Tech. Spec. Figure 2.1-1
5. Rx Data Man.14.1 page 28
6. IPEOP F-0.1
7. EPIP-AD-02
8. E-AR-09 figure 1
9. STEAM TABLES

Xenon Behavior On A Reactor Trip
From 100%, 80%, 60% and 40% Power

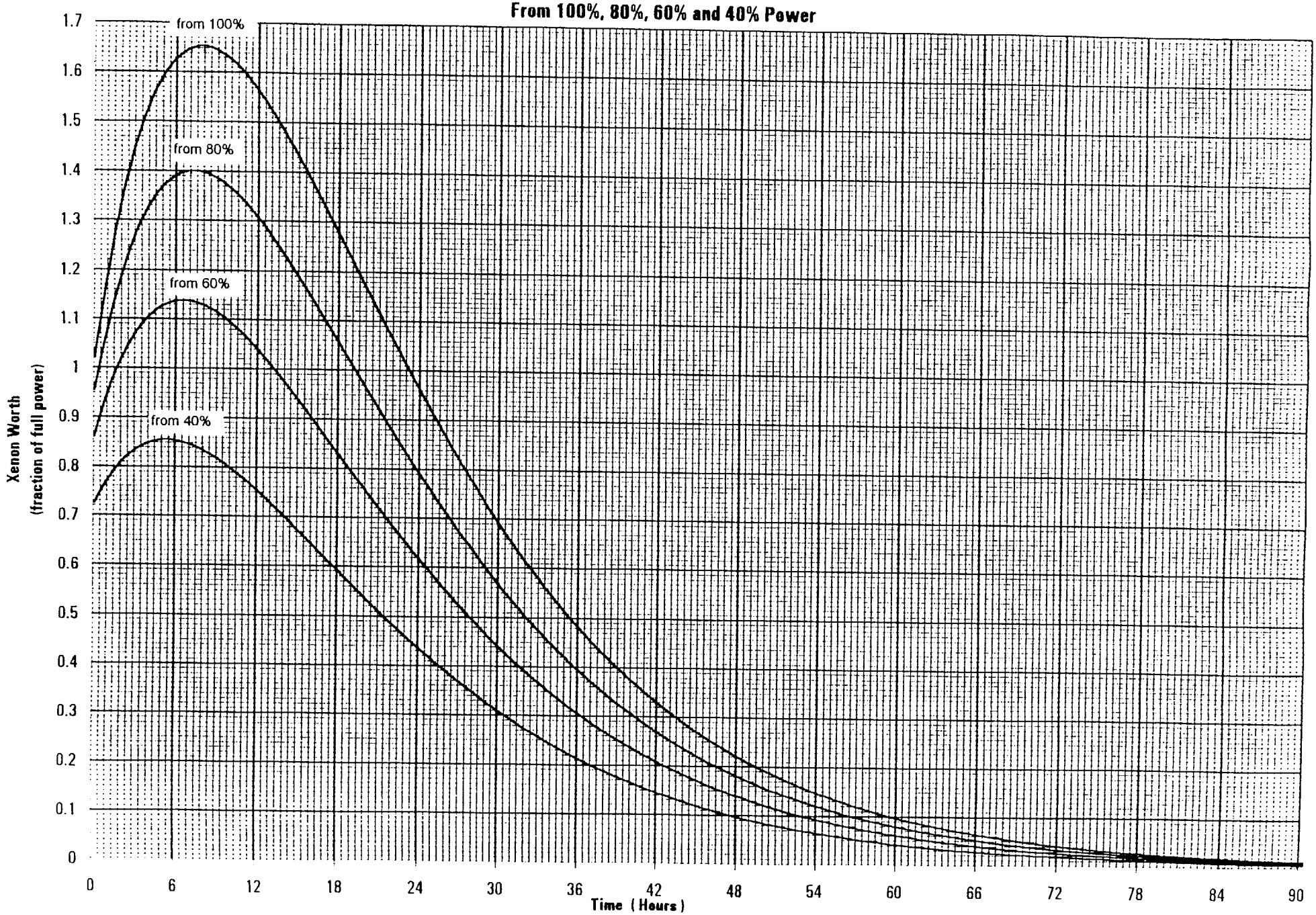

Cycle 24 Xenon Worth vs. Burnup

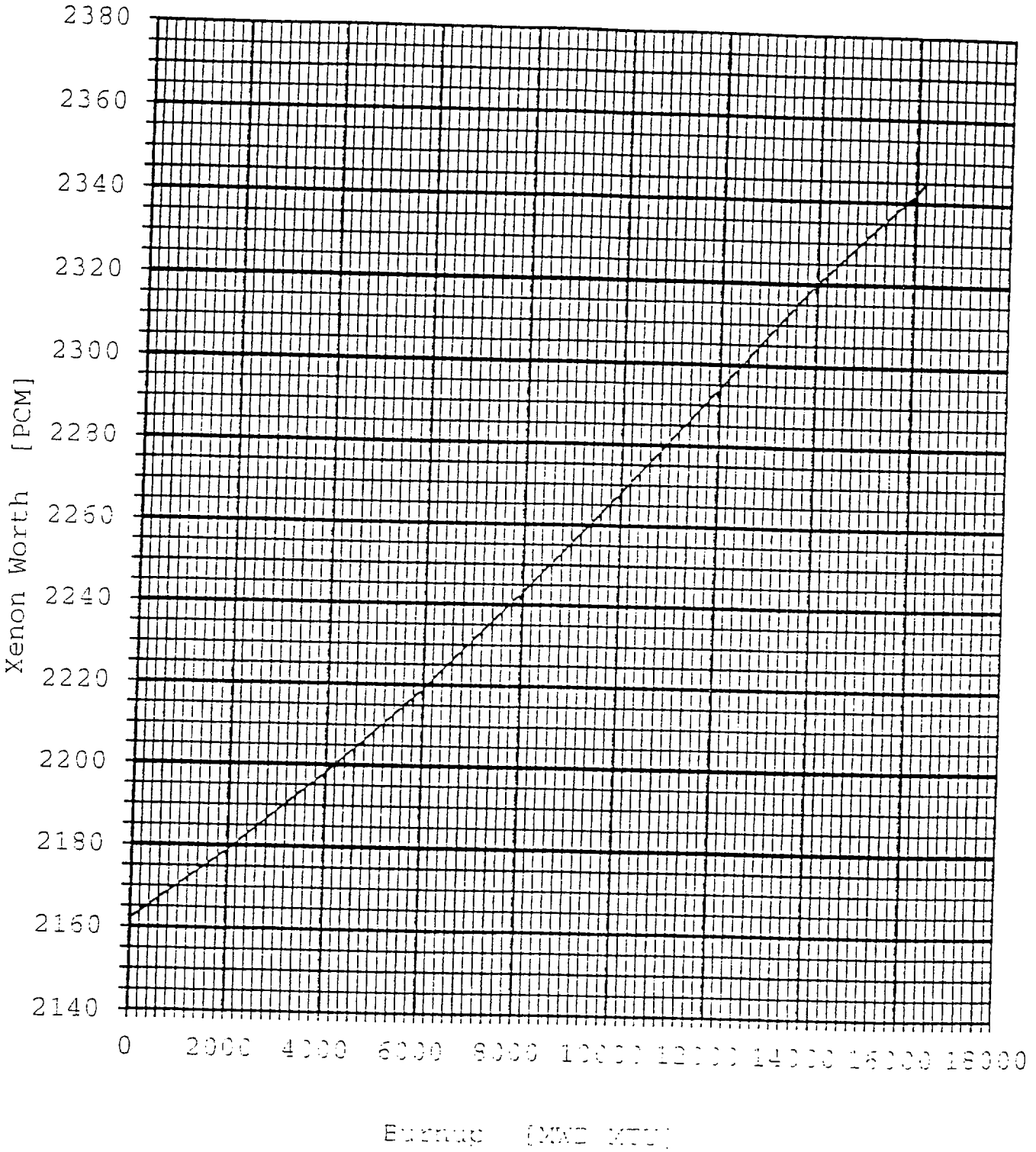

CYCLE 24, 0 MWD/MTU, NOXE, HZP, 1947 PPM, RODWORTH TABLES FOR OVERLAP DCB
KEWAUNEE NUCLEAR POWER PLANT
ACCUMULATED INTEGRAL ROD WORTH TABLES

STEPS W/D	(PCM)	STEPS W/D	(PCM)
GROUP D		GROUP D	
228	-0	148	-301
226	-1	146	-311
224	-2	144	-320
222	-4	142	-329
220	-6	140	-338
218	-10	138	-347
216	-14	136	-356
214	-18	134	-366
212	-24	132	-375
210	-29	130	-384
208	-36	128	-393
206	-42	126	-401
204	-49	124	-410
202	-57	122	-419
200	-64	120	-428
198	-72	118	-436
196	-81	116	-445
194	-89	114	-453
192	-98	112	-462
190	-106	110	-470
188	-115	108	-478
186	-124	106	-486
184	-133	104	-494
182	-142	102	-502
180	-152	GROUP C	
178	-161	100	228 -510
176	-170	98	226 -520
174	-180	96	224 -528
172	-189	94	222 -538
170	-198	92	220 -549
168	-208	90	218 -560
166	-217	88	216 -573
164	-227	86	214 -586
162	-236	84	212 -599
160	-245	82	210 -614
158	-255	80	208 -628
156	-264	78	206 -643
154	-273	76	204 -657
152	-283	74	202 -673
150	-292	72	200 -688

CYCLE 24, 0 MWD/MTU, NOXE, HZP, 1947 PPM, RODWORTH TABLES FOR OVERLAP DCB
KEWAUNEE NUCLEAR POWER PLANT
ACCUMULATED INTEGRAL ROD WORTH TABLES

STEPS W/D		(PCM)	STEPS W/D	(PCM)
GROUP D	GROUP C			
70	198	-704		
68	196	-719		
66	194	-735		
64	192	-751		
62	190	-766		
60	188	-782		
58	186	-797		
56	184	-813		
54	182	-828		
52	180	-843		
50	178	-858		
48	176	-873		
46	174	-888		
44	172	-902		
42	170	-917		
40	168	-931		
38	166	-945		
36	164	-959		
34	162	-972		
32	160	-986		
30	158	-999		
28	156	-1012		
26	154	-1025		
24	152	-1038		
22	150	-1051		
20	148	-1064		
18	146	-1077		
16	144	-1090		
14	142	-1103		
12	140	-1114		
10	138	-1127		
8	136	-1139		
6	134	-1151		
4	132	-1165		
2	130	-1177		
0	128	-1189		

FIGURE TS 2.1-1

Safety Limits Reactor Core, Minimum Coolant System Flow (TS 3.10.m), Minimum DNBR

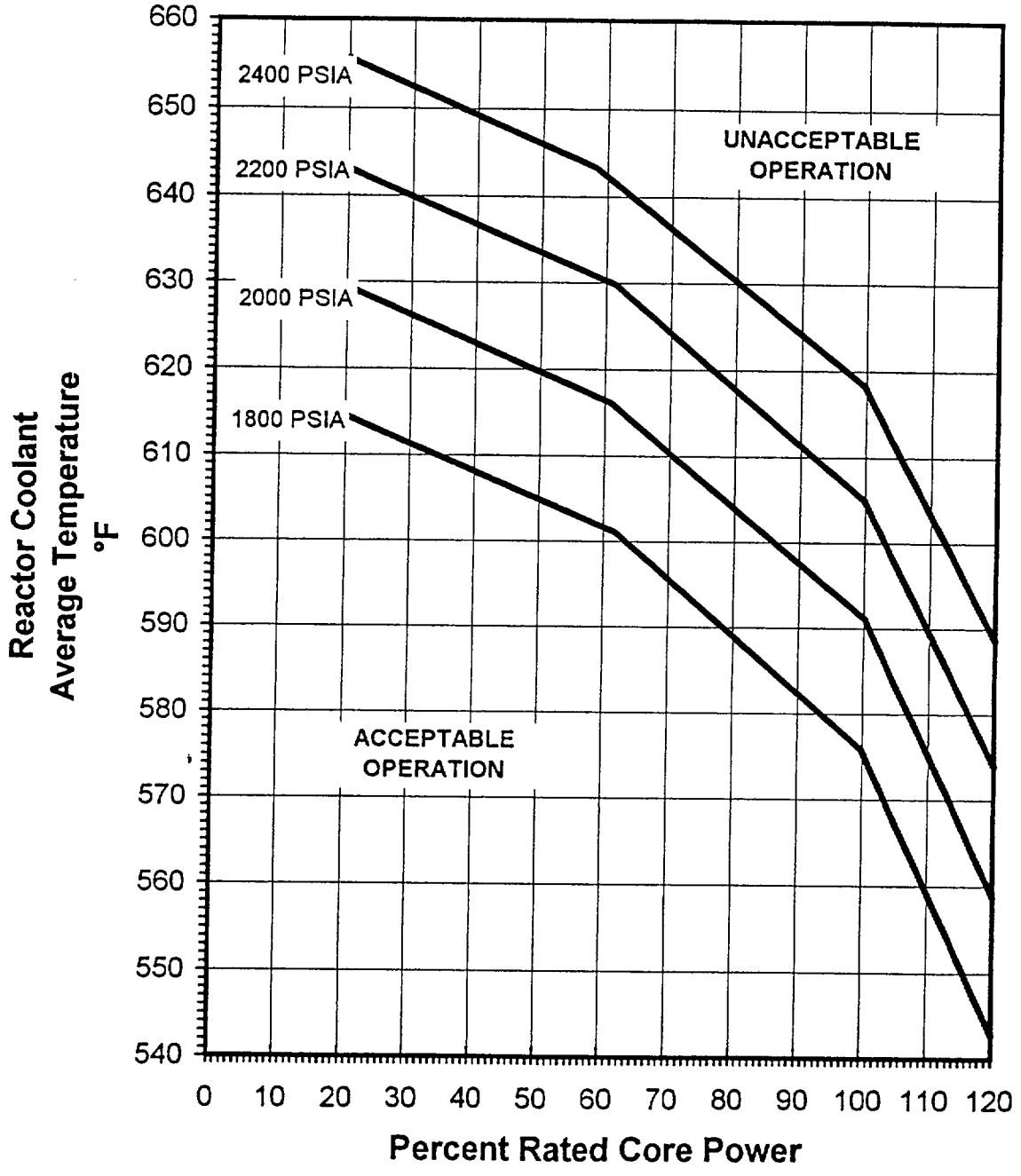

Amendment No. 142
12/02/98

IRPI VOLTAGES FOR ROD G11

ROD STEPS	DC VOLTAGES	AC VOLTAGES
0	-0.041	9.486
2	-0.005	
4	0.030	
6	0.065	
8	0.100	
10	0.135	
12	0.169	
14	0.204	
16	0.239	
18	0.273	
20	0.307	10.037
22	0.342	
24	0.376	
26	0.410	
28	0.444	
30	0.478	
32	0.512	
34	0.546	
36	0.579	
38	0.613	
40	0.646	10.573
42	0.680	
44	0.713	
46	0.746	
48	0.779	
50	0.813	
52	0.845	
54	0.878	
56	0.911	
58	0.944	
60	0.976	11.095
62	1.009	
64	1.041	
66	1.074	
68	1.106	
70	1.138	
72	1.170	
74	1.202	
76	1.234	
78	1.265	
80	1.297	11.603
82	1.329	
84	1.360	
86	1.392	
88	1.423	
90	1.454	
92	1.485	
94	1.516	
96	1.547	
98	1.578	
100	1.609	12.097
102	1.640	
104	1.670	
106	1.701	
108	1.731	
110	1.761	
112	1.792	
114	1.822	

ROD STEPS	DC VOLTAGES	AC VOLTAGES
116	1.852	
118	1.882	
120	1.912	12.576
122	1.941	
124	1.971	
126	2.001	
128	2.030	
130	2.059	
132	2.089	
134	2.118	
136	2.147	
138	2.176	
140	2.205	13.040
142	2.234	
144	2.263	
146	2.291	
148	2.320	
150	2.349	
152	2.377	
154	2.405	
156	2.433	
158	2.462	
160	2.490	13.490
162	2.518	
164	2.545	
166	2.573	
168	2.601	
170	2.629	
172	2.656	
174	2.683	
176	2.711	
178	2.738	
180	2.765	13.926
182	2.792	
184	2.819	
186	2.846	
188	2.873	
190	2.899	
192	2.926	
194	2.953	
196	2.979	
198	3.005	
200	3.032	14.348
202	3.058	
204	3.084	
206	3.110	
208	3.136	
210	3.161	
212	3.187	
214	3.213	
216	3.238	
218	3.263	
220	3.289	14.755
222	3.314	
224	3.339	
226	3.364	
228	3.389	
230	3.414	14.953

WISCONSIN PUBLIC SERVICE CORPORATION	NO. F-0.1	REV B
KEWAUNEE NUCLEAR POWER PLANT	TITLE SUBCRITICALITY	
EMERGENCY OPERATING PROCEDURES	DATE MAY 1 1991	PAGE 1 of 1
REVIEWED BY D. Braun	APPROVED BY M L Marchi	

NUCLEAR SAFETY RELATED	PORC REVIEW REQUIRED	SRO APPROVAL OF TEMPORARY CHANGES REQUIRED
☒ YES ☐ NO	☒ YES ☐ NO	☒ YES ☐ NO

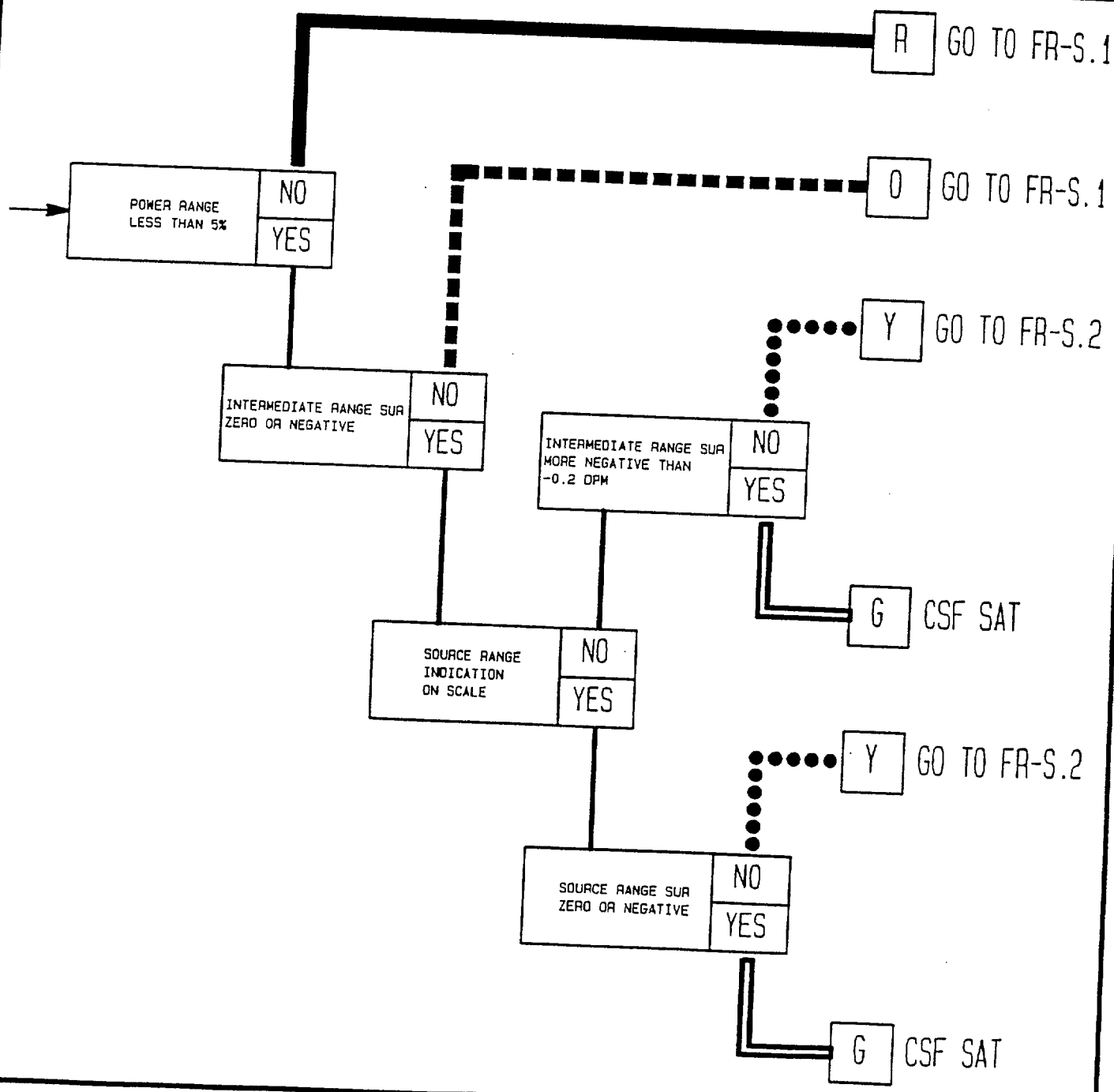

EMERGENCY ACTION LEVEL CHARTS

The following charts are separated into different abnormal operating conditions which may, depending upon their severity, be classified as an Unusual Event, Alert, Site Emergency, or General Emergency.

	CHART	PAGE
Abnormal Radiological Effluent	A (1)	4
Gaseous Effluent Action Levels	A (2)	5 – 7
Fuel Damage Indication	B	8
Primary Leak to LOCA	C	9
Primary to Secondary Leak	D	10
Loss of Power	E	11
Engineered Safety Feature Anomaly	F	12
Loss of Indication	G	13
DELETED	H	13
Secondary Side Anomaly	I	14
Miscellaneous Abnormal Plant Conditions	J	15
Fire and Fire Protection	K	16
DELETED	L	16
Earthquake	M	17
High Winds or Tornado	N	17
Flood, Low Water, or Seiche	O	18
External Events and Chemical Spills	P	19
Security Contingency	Q	20

CHART A(1)
ABNORMAL RADIOLOGICAL EFFLUENT

KNPP INDICATION	EMERGENCY CLASSIFICATION CRITERIA	CLASSIFICATION
SEE CHART A(2)	Effluent monitors detect levels corresponding to greater than 1 rem/hr whole body or 5 rem/hr thyroid at the site boundary under "actual meteorological" conditions.	GENERAL EMERGENCY
Projected or measured dose rates to be provided by the Radiological Protection Director or Environmental Monitoring Teams.	Projected or measured in the environs dose rates greater than 1 rem/hr whole body or 5 rem/hr thyroid at the site boundary.	GENERAL EMERGENCY
SEE CHART A(2)	Effluent monitors detect levels corresponding to greater than 50 mr/hr for ½ hour OR greater than 500 mr/hr for two minutes (or five times these levels to the thyroid) OR for "adverse meteorology."	SITE EMERGENCY
Projected or measured dose rates to be provided by the Radiological Protection Director or Environmental Monitoring Teams.	At the site boundary, projected or measured dose rates greater than 50 mr/hr for ½ hours OR greater than 500 mr/hr for two minutes (or five times these levels to the thyroid) or EPA PAGs are projected to be exceeded outside the site boundary.	SITE EMERGENCY
SEE CHART A(2)	Radiological effluents greater than 10 times ODCM instantaneous limits.	ALERT
a. Containment R-2 OR R-7 ≥ 1.0E+4 mr/hr, OR b. Charging Area R-4 ≥ 1.0E+4 mr/hr, OR c. SFP Area R-5 ≥ 1.0E+4 mr/hr, OR d. Plant area air sample indicates airborne contamination > 1000 times the occupational DAC values.	Radiation levels or airborne contamination which indicate a severe degradation in the control of radioactive materials (e.g., radiation levels suddenly increase by a factor of 1000).	ALERT
(1) Gaseous Releases: See Chart A(2) (2) Liquid Releases: Notification by the Rad-Chem Group of violating ODCM 3.3.1 limits.	Off-site Dose Calculation Manual limits exceeded.	UNUSUAL EVENT

CHART A(2)
GASEOUS EFFLUENT ACTION LEVELS

1. AUX BUILDING VENT RELEASES - *WITH SIGNIFICANT CORE DAMAGE*

Instrument readings assuming a post-accident gas release and significant core damage (Containment High Range Radiation Monitors 42599 (R-40) and 42600 (R-41) reads 1000 R/hr within one-half hour of the accident).

NOTE: Use adverse meteorology conditions (ADV MET) only when, 10m and 60m wind speed < 5mph AND Delta-T > 2.4 degrees F. All other cases are average meteorology (AVG MET).

NOTE: R-13 and R-14 are expected to be off scale high during all events on this page.

SV & SFP FANS	AUX BLDG SPING MONITORS				AUX BLDG STACK MONITORS				EMERG. CLASS.
	MID RANGE CPM (01-07) PPCS PT G9086G		HIGH RANGE CPM (01-09) PPCS PT G9088G		R-35 MR/HR		R-36 R/HR		
TOTAL NUMBER RUNNING	AVG MET	ADV MET	AVG MET	ADV MET	AVG MET	ADV MET	AVG MET	ADV MET	
1	**	1.1E+4	6.5E+1	*	**	7.9E+2	1.27E+2	7.9E-1	GENERAL EMERG.
2	8.8E+5	5.5E+3	3.25E+1	*	**	3.9E+2	6.35E+1	4.0E-1	
3	5.9E+5	3.7E+3	2.16E+1	*	**	2.6E+2	4.2E+1	2.6E-1	
4	4.4E+5	2.7E+3	1.62E+1	*	**	2.0E+2	3.175E+1	2.0E-1	
1	8.8E+4	5.5E+2	3.0E+0	*	6.3E+3	3.9E+1	6.3E+0	*	SITE EMERG.
2	4.4E+4	2.7E+2	1.5E+0	*	3.1E+3	1.9E+1	3.1E+0	*	
3	2.9E+4	1.8E+2	1.0E+0	*	2.1E+3	1.3E+1	2.1E+0	*	
4	2.2E+4	1.3E+2	*	*	1.5E+3	9.5E+0	1.5E+0	*	
1	1.0E+3	6.2E+0	*	*	7.0E+1	*	*	*	ALERT
2	5.0E+2	3.1E+0	*	*	3.5E+1	*	*	*	
3	3.3E+2	2.0E+0	*	*	2.3E+1	*	*	*	
4	2.5E+2	1.5E+0	*	*	1.75E+1	*	*	*	
1	1.0E+2	6.2E-1	*	*	7.0E+0	*	*	*	UNUSUAL EVENT
2	5.0E+1	3.1E-1	*	*	3.5E+0	*	*	*	
3	3.3E+1	2.0E-1	*	*	2.3E+0	*	*	*	
4	2.5E+1	1.5E-1	*	*	1.7E+0	*	*	*	

* Offscale Low
** Offscale High (Confirmation Only)

CHART A(2)
GASEOUS EFFLUENT ACTION LEVELS continued

2. AUX BUILDING VENT RELEASES *WITHOUT CORE DAMAGE*

NOTE: Use adverse meteorology conditions (ADV MET) only when, 10m and 60m wind speed < 5mph AND Delta-T > 2.4 degrees F. All other cases are average meteorology (AVG MET).

NOTE: R-13 and R-14 are expected to be off scale high during all events on this page.

SV & SFP FANS	AUX BLDG SPING MONITORS				EMERG. CLASS.
	MID RANGE CPM (01-07) PPCS PT G9086G		HIGH RANGE CPM (01-09) PPCS PT G9088G		
TOTAL NUMBER RUNNING	AVG MET	ADV MET	AVG MET	ADV MET	
1	**	9.4E+4	1.6E+4	1.0E+2	GENERAL EMERG.
2	**	4.7E+4	8.0E+3	5.0E+1	
3	**	3.1E+4	5.3E+3	3.3E+1	
4	**	2.3E+4	4.0E+3	2.5+1	
1	7.5E+5	4.6E+3	8.0E+2	5.0E+0	SITE EMERG.
2	3.7E+5	2.3E+3	4.0E+2	2.5E+0	
3	2.5E+5	1.5+3	2.6E+2	1.6E+0	
4	1.8E+5	1.1E+3	2.0E+2	1.2E+0	

SV & SFP FANS TOTAL NUMBER RUNNING	AUX BLDG SPING MONITORS		EMERG. CLASS.
	LOW RANGE .Ci/cc (01-05) PPCS PT G9084G	MID RANGE CPM (01-07) PPCS PT 9086G	
1	**	8.6E+3	ALERT
2	**	4.3E+3	
3	**	2.8E+3	
4	**	2.1E+3	
1	6.3E-2	8.6E+2	UNUSUAL EVENT
2	3.1E-2	4.3E+2	
3	2.1E-2	2.8E+2	
4	1.5E-2	2.1E+2	

** Offscale High (Confirmation Only)

CHART A(2)
GASEOUS EFFLUENT ACTION LEVELS continued

3. STEAM LINE RELEASE *WITH SIGNIFICANT CORE DAMAGE*

Instrument readings assuming radioactive steam is releasing at a total of 1.4E+5 pounds per hour to the atmosphere and significant core damage (Containment High Range Radiation Monitor 42599 (R-40) or 42600 (R-41) reads 1000 R/hr within one-half hour of the accident).

	"A" Steam Line Monitors		"B" Steam Line Monitors		Emergency Classification
R-15 (cpm)	R-31 (mR/hr)	R-32 (R/hr)	R-33 (mR/hr)	R-34 (R/hr)	
**	1.3E+3	E+0	1.3E+03	E+0	General Emergency
**	6.0E+1	--	6.0E+1	--	Site Emergency
**	1.5E-1	--	1.5E-1	--	Alert
2.0E+05	--	--	--	--	Unusual Event

** Offscale High (Confirmation Only)

4. SHIELD BUILDING STACK RELEASE

Instrument readings assuming SBV System is operating in the recirculation mode.

Reactor Bldg. Discharge Vent SPING		Emergency Classification
PPCS PT G9077G (02-07) Mid Range (cpm)	PPCS PT G9079G (02-09) High Range (cpm)	
1.3E+05	1.5E+2	General Emergency
6.7E+03	7.0E+0	Site Emergency
1.5E+1	--	Alert
--	--	Unusual Event

CHART B
FUEL DAMAGE INDICATION

KNPP INDICATION	EMERGENCY CLASSIFICATION CRITERIA	CLASSIFICATION
Any core melt situation with large fission product releases from containment possible or major fuel failure.	Plant conditions exist that make the release of large amounts of radioactivity in a short time period possible.	GENERAL EMERGENCY
(Applies when more than one spent fuel element is damaged.) (1) Fuel Handling accident in Containment Report of a large object dropped in Rx core OR dropped spent fuel assembly, AND Alarm on R-11 OR R-12 (2) Fuel Handling Accident in Auxiliary Bldg. Report of: a. A large object dropped in spent fuel pool, OR b. A dropped spent fuel assembly, OR c. A loss of water level below spend fuel, AND Alarm on R-13 or R-14.	Major damage to spent fuel in containment or auxiliary building.	SITE EMERGENCY
R-9 indication is offscale high, AND Laboratory analysis confirms RCS activity levels comparable to USAR Table D.4-1.	Severe loss of fuel cladding a. Very high coolant activity sample b. Failed fuel monitor indicates greater than 1% fuel failures within 30 minutes or 5% total fuel failures.	ALERT
(1) Fuel Handling Accident in Containment A confirming report, AND Alarm on R-11 OR R-12 (2) Fuel Handling Accident in Auxiliary Bldg. A confirming report, AND Alarm on R-13 OR R-14.	Fuel damage accident with release of radioactivity to containment or auxiliary building.	ALERT
With RCS Temperature > 500°F, a. > 0.2 μCi/gram DOSE Equivalent I-131 for 48 hours, OR b. Exceeding T.S. figure 3.1-3 for Dose Equivalent I-131, OR c. > 91/$\bar{E}$ μCi/cc As determined by SP 37-065 (from T.S. 3.1.c)	High reactor coolant activity sample.	UNUSUAL EVENT
R-9 is greater than 5.0 R/hr, AND Verified by RCS chemistry sample analysis.	Failed fuel monitor indicates greater than 0.1% equivalent fuel failures within 30 minutes.	UNUSUAL EVENT

CHART C
PRIMARY LEAK TO LOCA

NOTE: This chart does not apply when leakage from the Reactor Coolant System is caused by a Steam Generator tube rupture.

KNPP INDICATION	EMERGENCY CLASSIFICATION CRITERIA	CLASSIFICATION
(1) LOCA is verified per IPEOP E-1 "Loss of Reactor or Secondary Coolant", AND (2) ECCS failure is indicated by: a. SI and RHR pumps not running, OR b. Verification of no flow to the reactor vessel, OR c. Core exit thermocouples indicate greater than 1200°F, AND (3) Failure or potential failure of containment is indicated by: a. Physical evidence of containment structure damage, OR b. Loss of all containment fan coil units and both trains of ICS, OR c. Containment hydrogen monitor indicates ≥ 10% hydrogen concentration, OR d. Containment pressure exceeds 46 psig.	(1) Loss of coolant accident, AND (2) Initial or subsequent failure of ECCS, AND (3) Containment failure or potential failure exists (loss of 2 of 3 fission product barriers with a potential loss of 3rd barrier).	GENERAL EMERGENCY
SI System is activated and RCS leakage exceeds charging system capacity as verified by Control Room indications or IPEOPs.	Reactor Coolant System leakage greater than make-up pump capacity.	SITE EMERGENCY
Charging flow versus let down flow indicates leakage > 50 GPM from an unidentified source.	Reactor Coolant System leak rate greater than 50 GPM.	ALERT
Initiation of reactor shutdown required by Technical Specification, Section T.S. 3.1.d. Indicated leakage may be determined using Reactor Coolant System mass balance calculations performed by SP-36-082.	Exceeding Reactor Coolant System leak rate, Technical Specifications, requiring reactor shutdown.	UNUSUAL EVENT

CHART D
PRIMARY TO SECONDARY LEAK

KNPP INDICATION	EMERGENCY CLASSIFICATION CRITERIA	CLASSIFICATION
(1) Entry into IPEOP E-3 "Steam Generator Tube Rupture" is expected or has occurred, AND (2) Primary to secondary flow > 800 GPM OR RCS pressure decreasing uncontrollably, AND (3) All three transformers Main Aux., Reserve Aux., and Tertiary Aux., are de-energized.	Rapid failure of steam generator tubes with loss of off-site power.	SITE EMERGENCY
(1) Entry into IPEOP E-3 "Steam Generator Tube Rupture" is expected or has occurred, AND (2) Primary to secondary leak rate > 400 GPM, AND (3) All three transformers: Main Aux., Reserve Aux., and Tertiary Aux., are de-energized.	Rapid gross failure of one steam generator tube with loss of off-site power.	ALERT
(1) Entry into IPEOP E-3 "Steam Generator Tube Rupture" is expected or has occurred, AND (2) Primary-to-secondary leak rate greater than 800 GPM indicated by SI flow **OR** RWST level change.	Rapid failure of multiple steam generator tubes.	ALERT
Primary to secondary leakage > 150 gallons per day for more than 4 hours (TS 3.1.d.2). **Do not delay declaration** if leakage suddenly increases above 150 gallons per day **AND** plant shutdown actions are initiated.	Exceeding Primary to Secondary leak rate Technical Specification.	UNUSUAL EVENT

CHART E
LOSS OF POWER

KNPP INDICATION	EMERGENCY CLASSIFICATION CRITERIA	CLASSIFICATION
(1) RCS is ≥ 350°F, AND (2) Buses 1 through 6 are de-energized including the D/G supplies to buses 5 and 6, AND (3) Loss of the turbine driven AFW pump, AND (4) Conditions exist for greater than 2 hours.	Failure of off-site and on-site AC power, AND Total loss of auxiliary feedwater makeup capability for greater than 2 hours. (Loss of power plus loss of all AFW would lead to clad failure and potential containment failure.)	GENERAL EMERGENCY
Buses 1 through 6 are de-energized including the D/G supplies to buses 5 and 6 for longer than 15 minutes. (Does not apply when core is unloaded or cavity is flooded with internals removed.)	Loss of off-site power, AND Loss of on-site AC power (for more than 15 minutes).	SITE EMERGENCY
Low voltage lockout OR de-energized condition on all safeguards DC distribution cabinets for greater than 15 minutes. a. BRA 102 and BRB 102, OR b. BRA 104 and BRB 104, OR c. BRA 102 and BRB 104, OR d. BRB 102 and BRA 104 (Does not apply when core is unloaded or cavity is flooded with internals removed.)	Loss of all vital on-site DC power (for more than 15 minutes).	SITE EMERGENCY
Low voltage lockout OR de-energized condition on all safeguards DC distribution cabinets for less than 15 minutes. a. BRA 102 and BRB 102, OR b. BRA 104 and BRB 104, OR c. BRA 102 and BRB 104, OR d. BRB 102 and BRA 104 (Does not apply when core is unloaded or cavity is flooded with internals removed.)	Loss of all vital on-site DC power (for less than 15 minutes).	ALERT
Buses 1 through 6 are de-energized, AND the D/G supplies to buses 5 and 6 do not respond as designed. AC power is restored to bus 5 or 6 within 15 minutes. (Does not apply when core is unloaded or cavity is flooded with internals removed.)	Loss of off-site power, AND Loss of on-site AC power (for less than 15 minutes.)	ALERT
With the Reactor Coolant System above cold shutdown condition: a. All three transformers: Main Aux., Reserve Aux., and Tertiary are de-energized, OR b. Both D/Gs unavailable (unable to supply bus 5 or 6 by any means).	Loss of off-site power, OR Loss of on-site power capability.	UNUSUAL EVENT
Core is unloaded or reactor cavity is flooded with internals removed, AND Buses 1 through 6 are de-energized including the D/G supplies to buses 5 and 6 for longer than 15 minutes.	Loss of off-site power, AND Loss of on-site AC power (for more than 15 minutes).	UNUSUAL EVENT

CHART F
ENGINEERED SAFETY FEATURE ANOMALY

KNPP INDICATION	EMERGENCY CLASSIFICATION CRITERIA	CLASSIFICATION
RCS ≥ 350°F with a loss of cooling capability or inventory control: a. Loss of negative reactivity control, OR b. Steam dump, S/G safeties, and power operating reliefs not operable, OR c. Inability to feed S/Gs at HSD conditions (No AFW or Main Feedwater Flow), OR d. Loss of RCS inventory control. A Site Emergency should be declared upon the initiation of bleed and feed per FR H.1, "Response to Loss of Secondary Heat Sink"	Complete loss of any function needed for plant hot shutdown.	SITE EMERGENCY
(Apply this criteria when the RCS is < 350°F.) (1) Loss of both trains of RHR, AND (2) The inability to sustain either natural **OR** forced circulation with the steam generators. (Does not apply when core is unloaded **OR** cavity is flooded with internals removed.)	Complete loss of any function required for cold shutdown.	ALERT
Failure of both Rx trip breakers to open upon receipt of a valid signal. Applies even if IPEOP FR S.1 is not entered.	Failure of the Reactor Protection System to initiate and complete a reactor trip which brings the reactor sub-critical.	ALERT
(1) Loss of ESF function, required support function or required Tech Spec instruments **OR** Exceeding Tech Spec Safety Limits, AND (2) upon discovery, inability or failure to take required shutdown or mode change actions within the required time. NOTE: Total loss of AFW system when required (FR-H.1 implemented) should be declared a UE regardless of Tech Spec action compliance.	Inability to reach required shutdown within Tech Spec limits	UNUSUAL EVENT

CHART G
LOSS OF INDICATION

KNPP INDICATION	EMERGENCY CLASSIFICATION CRITERIA	CLASSIFICATION
(1) Total loss of Annunciator System computer alarms, and sequence of events recorder for greater than 15 minutes, AND (2) Uncontrolled plant transient in progress or initiated during the loss.	Most or all alarms (annunciators) lost and a plant transient initiated or in progress.	SITE EMERGENCY
Total loss of Annunciator System, computer alarms, and sequence of events recorder. (Not applicable when plant is at or below cold shutdown.)	Most or all alarms (annunciators) lost.	ALERT
Significant loss of ESF or Rx Protection instrumentation. An Unusual Event should NOT be declared for a non-emergency Tech Spec backdown, when the affected parameter remains monitorable. (Not applicable when plant is at or below cold shutdown.)	Indications or alarms on process or effluent parameters not functional in control room to an extent requiring plant shutdown or other significant loss of assessment capability.	UNUSUAL EVENT

CHART H

(DELETED)

CHART I
SECONDARY SIDE ANOMALY

KNPP INDICATION	EMERGENCY CLASSIFICATION CRITERIA	CLASSIFICATION
(1) Main steam line break that results in a SI actuation, AND (2) a. R-15 or R-19 reads offscale high with confirmation by chemistry analysis, OR b. Primary to secondary leakage > 50 gpm, AND (3) a. R-9 or CNTMT high range rad monitors (42599, 42600) indicate > 10 R/hr, OR b. CNTMT hydrogen monitor indicates > 1% hydrogen concentration.	Steam line break, AND primary to secondary leak > 50 GPM, AND Indication of Fuel Damage.	SITE EMERGENCY
Main steam line break that results in a SI actuation, AND a. R-15 OR R-19 reads a factor of 1000 above normal, OR b. Primary to secondary leakage > 10 gpm.	Steam line break with significant (greater than 10 GPM) primary to secondary leakage. (Applies even if events occur in opposite steam generators.)	ALERT
Turbine trip and observation of penetration of casing.	Turbine rotating component failure causing rapid plant shutdown.	UNUSUAL EVENT
The uncontrolled depressurization of the secondary system to < 500 psig steam generator pressure (SI actuation setpoint).	Rapid depressurization of the secondary side.	UNUSUAL EVENT

CHART J
MISCELLANEOUS ABNORMAL PLANT CONDITIONS

KNPP INDICATION	EMERGENCY CLASSIFICATION CRITERIA	CLASSIFICATION
(1) Containment boundary failure or potential failure: a. Containment pressure > 46 psig, OR b. Loss of all containment fan coil units and both trains of ICS, OR c. Containment hydrogen monitor ≥ 10% hydrogen concentration, AND (2) Loss of core cooling capability: a. Loss of SI and RHR flow, AND (3) Failure of shutdown system when required: a. Entry into IPEOP FR-S.1, "Response to Nuclear Power Generation/ATWS," OR b. Loss of AFW for greater than 30 minutes with loss of main FW and condensate.	Other plant conditions that make a release of large amounts of radioactivity in a short time period possible; e.g., any core melt situation. Examples: - Failure of main FW and AFW systems for greater than 30 minutes without Safety Injection and Residual Heat Removal flow. Plus a containment failure is imminent. - Transient requiring the operation of shutdown systems with a failure of these shutdown systems. In addition, failure of SI and RHR and containment failure is imminent.	GENERAL EMERGENCY
Evacuation of Control Room (E-O-06 event).	Evacuation of control room and control of shutdown systems required from local stations.	SITE EMERGENCY
Conditions that warrant increased awareness on part of the plant staff will be evaluated by the Plant Manager or his designate. This is to determine if conditions are applicable for activating the E.P. Example: Loss of AFW system when required, validated upon implementation of FR H.1 "Response to Loss of Secondary Heat Sink."	Other plant conditions that warrant increased awareness on the part of plant staff or state and/or local authorities.	UNUSUAL EVENT

CHART K
FIRE AND FIRE PROTECTION

KNPP INDICATION	EMERGENCY CLASSIFICATION CRITERIA	CLASSIFICATION
A fire within the Auxiliary Building, Technical Support Center, safeguards alley, D/G rooms or screenhouse that defeats redundant safety trains of ESF equipment causing the required ESF system to be inoperable.	A fire compromising the functions of safety systems.	SITE EMERGENCY
A fire within the Auxiliary Building, Technical Support Center, safeguards alley, D/G rooms or screenhouse that causes a single train of required ESF equipment to be inoperable.	A fire potentially affecting safety systems.	ALERT
A fire within the Administration Building, Technical Support Center, Turbine Building, Warehouse Annex, Auxiliary Building, or Containment Building lasting more than 10 minutes.	A fire within the plant lasting more than 10 minutes.	UNUSUAL EVENT

CHART L

(DELETED)

CHART M
EARTHQUAKE

KNPP INDICATION	EMERGENCY CLASSIFICATION CRITERIA	CLASSIFICATION
(1) Activation of seismic recorder with TRIGGER, OBE, and DBE lights lit in relay room on RR159, AND (2) Verification of a seismic event by physical experience or from U. of W. - Milwaukee Seismic Center.	An earthquake greater than Design Basis Earthquake (DBE).	SITE EMERGENCY
(1) Activation of seismic recorder with TRIGGER, and OBE lights lit in relay room on RR159, AND (2) Verification of a seismic event by physical experience or from U. of W. - Milwaukee Seismic Center.	An earthquake greater than Operational Basis Earthquake (OBE).	ALERT
(1) Activation of seismic recorder with TRIGGER light lit in relay room on RR159, OR (2) An earthquake felt in the Plant*. (*Should be confirmed by evidence of physical damage or verification from University of Wisconsin Seismic Center.)	An earthquake felt in plant or detected on station seismic instrumentation.	UNUSUAL EVENT

NOTE: Telephone numbers for U of W - Milwaukee Seismic Center are in EPIP-APPX-A-3.

CHART N
HIGH WINDS OR TORNADO

KNPP INDICATION	EMERGENCY CLASSIFICATION CRITERIA	CLASSIFICATION
(1) Winds in excess of 100 mph for greater than 1 hour, AND (2) Plant above cold shutdown condition.	Sustained winds in excess of design levels with plant not in cold shutdown.	SITE EMERGENCY
(1) A tornado which strikes the facility, AND (2) Causes damage to render a single train of required ESF equipment to be inoperable.	Any tornado striking facility.	ALERT
A tornado observed on-site causing significant damage to the facility.	Any tornado on-site.	UNUSUAL EVENT

CHART O
FLOOD, LOW WATER, OR SEICHE

KNPP INDICATION				EMERGENCY CLASSIFICATION CRITERIA	CLASSIFICATION
FOREBAY LEVEL				Flood, low water, or seiche near design levels.	ALERT
0 PUMPS	1 PUMP	2 PUMPS	CORRESPOND TO LAKE LEVEL		
NOTE 3	NOTE 1	≥ 94% *	≥ 588 ft.		
≤ 64% *	≤ 42% *	≤ 42% *	≤ 573 ft.		
OR Deep water Wave ≥ 22.5 ft.					
FOREBAY LEVEL				50-year flood, low water or seiche.	UNUSUAL EVENT
0 PUMPS	1 PUMP	2 PUMPS	CORRESPOND TO LAKE LEVEL		
NOTE 2	≥ 98% *	≥ 88% *	≥ 586 ft.		
≤ 71% *	≤ 63% * NOTE 4	≤ 54% * NOTE 4	≤ 575 ft. 4 in.		
OR Deep water wave ≥18 ft.					

NOTE 1: Above the bottom of bar No. 1 painted on the south wall of the forebay.

NOTE 2: Above the bottom of bar No. 2 painted on the south wall of the forebay.

NOTE 3: Above the bottom of bar No. 3 painted on the south wall of the forebay.

NOTE 4: Applies to an uncontrollable decrease (cannot be restored by operator action; e.g., throttling water box valves, etc.).

* Computer point for forebay level is L9075A and should be used because of its greater accuracy.

Plant elevations and lake elevations are referenced to International Great Lakes Datum (IGLD), 1955.

(IGLD 1955 = IGLD 1985 - .7 FEET)

CHART P
EXTERNAL EVENTS AND CHEMICAL SPILLS

KNPP INDICATION	EMERGENCY CLASSIFICATION CRITERIA	CLASSIFICATION
An aircraft crash into plant buildings which causes a complete loss of an ESF function.	Aircraft crash affecting vital structures by impact OR fire.	SITE EMERGENCY
A missile strikes plant buildings **OR** explosion occurs within a plant building, which causes a complete loss of an ESF function.	Severe damage to safe shutdown equipment from missiles or explosion.	SITE EMERGENCY
Release of flammable or toxic gas from a ruptured container, which causes or is likely to cause evacuation of stations necessary to control shutdown systems. Portable monitors indicate toxic or explosive concentrations of the gas at life threatening levels in those vital areas.	Uncontrolled release of toxic or flammable gas is confirmed within vital area.	SITE EMERGENCY
An aircraft crashes into plant buildings **AND** causes a single train of required ESF equipment to be inoperable.	Aircraft crash on facility.	ALERT
A missile strikes the facility **AND** causes a single train of required ESF equipment to be inoperable.	Missile impact from whatever source on facility.	ALERT
Release of toxic or flammable gas at life threatening levels from a ruptured container enter the protected area **AND** impacts safe operation of the plant.	Uncontrolled release of toxic or flammable gas is confirmed within the protected area.	ALERT
Self-explanatory.	Known explosion damage to facility affecting plant operation.	ALERT
(1) An aircraft crash within the site boundary, OR (2) Unusual aircraft activity such as erratic flying, dropped unidentified object, or other hostile acts, which threaten the plant or plant personnel. (Any other persistent aircraft activity for which identification attempts through the FAA or other agencies have been unsuccessful.)	Aircraft crash on-site or unusual aircraft activity over facility.	UNUSUAL EVENT
Release of toxic or flammable gas from a ruptured tank truck on site. Portable monitors indicate toxic or explosive concentrations at life threatening levels of the gas near the spill area.	Uncontrolled release of toxic or flammable gas is confirmed on site.	UNUSUAL EVENT

CHART Q
SECURITY CONTINGENCY

KNPP INDICATION	EMERGENCY CLASSIFICATION CRITERIA	CLASSIFICATION
Physical attack on the plant that has resulted in unauthorized personnel occupying the control room or any other vital areas as described in the Security Plan.	Loss of physical control of the plant.	GENERAL EMERGENCY
Physical attack on the plant involving imminent occupancy of the control room, auxiliary shutdown panels, or other vital areas as defined by the Security Plan.	Imminent loss of physical control of the plant.	SITE EMERGENCY
Security safeguards contingency event that results in adversaries commandeering an area of the plant, but not control over shutdown capability or of any vital areas as defined in the Security Plan.	Ongoing security compromise.	ALERT
Examples: - Bomb threat accompanied by interception of bomb materials. - Adversary intercepted in the protected area. - Un-detonated bomb found within the protected area.	Security threat or attempted entry or attempted sabotage.	UNUSUAL EVENT

NOTE: Security staff will **not** act as notifier during **security events**. Utilize Control Room staff for notifications.

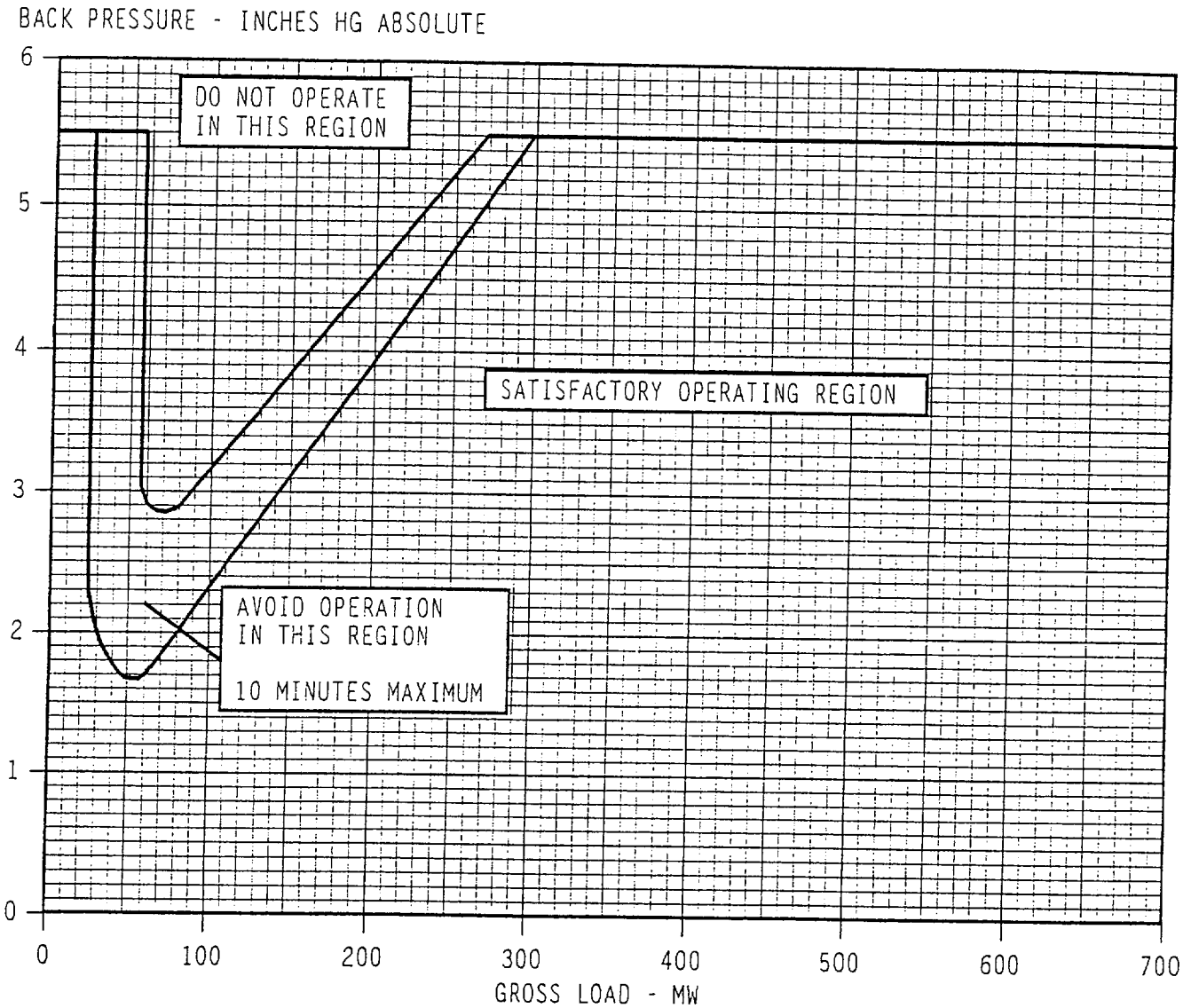

NOTE: IF entering "Avoid Region" can NOT be prevented, THEN do NOT operate in region for longer than 10 minutes.

NOTE: Operation is NOT allowed in "Do Not Operate Region".

Figure 1 - OPERATING REGIONS BASED ON CONDENSER BACK PRESSURE

Record Number
001

QUESTION

The following Plant conditions exist:

- Reactor is critical at 10E-3% power.
- RCS Tave: 547°F and steady.
- PZR pressure: 2235 psig and steady.
- Control Bank D rods position: 100 steps.

Control Rods G-11 and G-3 (both in Bank D) drop. Which of the following will be the expected response?

Initially

A. Tave will decrease and Steam pressure will remain the same and the operator should recover the dropped control rods per E-CRD-49C, Dropped Rod.
B. Tave and Steam Pressure will both remain the same and the operator should trip the reactor based on TWO (2) dropped control rods per E-CRD-49C, Dropped Rod.
C. Tave will decrease and Steam pressure will remain the same and the operator should trip the reactor based on low Tave per N-CRD-49B, Reactor Startup.
D. Tave and Steam Pressure will both remain the same and the operator should shutdown the reactor for the TWO (2) dropped control rods as required by N-CRD-49B, Reactor Startup.

Answer	Question Source	Cognitive Level	Question Type	Level
B	Facility exam bank-049ADV045	Comprehension	Modified	BOTH

Tier/Group	K/A#	K/A Rating (RO/SRO)	K/A System/Event
T2/G1	001A2.07	4.1/4.4	Control Rod Drive

K/A Statement condition
A2-Ability to (a) predict the impacts of the following malfunction or operations on the CRDS- and (b) based on those predictions, use procedures to correct, control, or mitigate the consequences of those malfunctions or operations: (CFR 41.5/43.5/45.3/45.13)

K/A Statement
A2.07-Effect of reactor trip on primary and secondary parameters and systems

Reference	Provided Reference	Objective
OP E-CRD-49C	NONE	0490030501K01

Objective Statement
LIST THE IMMEDIATE OPERATOR ACTIONS, GIVEN A DROPPED ROD, IN ACCORDANCE WITH E-CRD-49C.

Explanation
At 10E-3, RCS temperature is being maintained by RXCP and Steam dump is in the Steam Pressure Mode. Neither dropped rods nor a reactor trip will effect RCS temperature or S/G pressure. If 2 or more rods are dropped by procedure E-CRD-49C the reactor is to be tripped. Option "A" is incorrect because Tave will remain the same and E-CRD-49C addresses on a single dropped rod. Option "C" is incorrect because Tave will remain the same and the low Tave temperature is approximately 365°F. Option "D" is incorrect because N-CRD-49B does not address a dropped rod.

Comments
Reviewed by dtb 3/16-Validated 3/26

Record Number
002

QUESTION

The following Plant conditions exist:

- Burnup is 6000 MWD/MTU.
- The Reactor Tripped from 80% power.
- An ECP is calculated for 7 hours after the Trip.
- Critical Rod position is 100 steps on Control Bank D.
- Boron is to remain constant for the Startup.

The Startup is delayed for 2 hours. How many steps will the Control Rods be from the calculated ECP?

A. 0-4 steps withdrawn
B. 8-12 steps inserted
C. 8-12 steps withdrawn
D. 14-18 step inserted

Answer	Question Source	Cognitive Level	Question Type	Level
B	Facility exam bank-001010526K01	Analysis	Modified	BOTH

Tier/Group	K/A#	K/A Rating (RO/SRO)	K/A System/Event
T2/G1	001K5.85	3.5/3.7	Control Rod Drive

K/A Statement condition
K5-Knowledge of the following operational implications as they apply to the CRDS: (CFR 41.5/45.7)

K/A Statement
K5.85-Estimation of xenon reactivity based on time to reach peak xenon after trip/shutdown, approximate peak xenon reactivities after shutdown from various levels, approximate xenon worth during the decay process following peak worth

Reference	Provided Reference	Objective
Rx Data Manual 9.1.2, 9.2, 5.1.1.1	Rx Data Manual 9.1.2, 9.2, 5.1.1.1	N020050101A01

Objective Statement
GIVEN A REACTOR STARTUP, PERFORM A MANUAL ESTIMATED CRITICAL POSITION CALCULATION IN ACCORDANCE WITH RE-28.

Explanation
The peak for xenon for an 80% reactor trip is approximately 7 hours after the trip. Waiting to 9 hour means that xenon is decaying and adding positive reactivity and would require rod to be inserted from the original ECP to offset the 33 pcm addition. Option A is incorrect due to using the 100% trip curve, which is 1 hour before and after the peak. Option C is incorrect as positive reactivity is being added vice the usual negative reactivity for these questions. Option D is incorrect as it is based on the 40% curve. Note that using the 60% curve will give an answer close to the correct answer and was not used in the distractors.

Comments
Reviewed by dtb 3/16-Validated 3/26

Question #2
001010526K01;

The following Plant conditions exist:

- Burnup is 6000 MWD/MTU.
- A Reactor Trip from 100% power occurred.
- An ECP is calculated for 2 hours after the Trip.
- Critical Rod position is 100 steps on Control Bank D.
- Boron is to remain constant for the Startup.

The Startup is delayed for 1 hour. How much more reactivity due to xenon, in pcm, will the Control Rods have to overcome?

ANSWER:

105-362 pcm

TIME ELEMENT: 3 Minutes POINTS: 1.0

REFERENCES:

1) Rx DATA MAN 9.1.2, Rev. 4/30/97
2) Rx DATA MAN 9.2, Rev. 11/19/98

USE OF REFERENCES EXPECTED: YES KNPP SYSTEM NUMBER: 193

OBJECTIVE NUMBER: N020050101A01

STATIC SIMULATOR CONDITIONS: N/A

QUALIFICATION LEVEL: RO/SRO REV: F

Convert to multiple choice and update to current core. Also length time to 12 hours. Determine what reference to provide to candidate. From KNPP Exam Bank for 001k5.85 - modified

Record Number
003

QUESTION

Containment pressure instrument PT-945, Containment Pressure (Channel I), has failed downscale. All appropriate actions of A-MI-87, Bistable Tripping for Failed Reactor Protection or Safeguards Instrument Procedure, have been completed.

Subsequently PT-949, Containment Pressure (Channel II) fails upscale.

What is the expected response of the plant?

A. Safety Injection will occur.
B. Main Steam Isolation Train A will occur.
C. Safety Injection and Main Steam Isolation Train A will occur.
D. Safety Injection, Containment Spray, and Main Steam Isolation will occur.

Answer	Question Source	Cognitive Level	Question Type	Level
A	Beaver Valley exam 3/99	Comprehension	Direct	BOTH

Tier/Group	K/A#	K/A Rating (RO/SRO)	K/A System/Event
T2/G1	013K6.01	2.7/3.1*	Engineered Safety Features Actuation

K/A Statement condition
K6-Knowledge of the effect of a loss or malfunction on the following will have on the ESFAS: (CFR 41.7/45.5 to 45.8)

K/A Statement
K6.01-Sensors and detectors

Reference	Provided Reference	Objective
A-MI-87, XK100-150	NONE	0550000001K03

Objective Statement
EXPLAIN THE RESPONSE TO THE OPERATION OF ALL ENGINEERED SAFETY FEATURES SYSTEM CONTROLS IN ACCORDANCE WITH LOGIC DIAGRAMS/SCHEMATICS XK100-144, XK100-148, XK100-149, XK100-150, XK100-546, XK100-556, XK100-557, XK100-559, E1634 THROUGH E1639, E2000,

Explanation
Containment pressure has 6 instruments/detectors. P-945, P-947, and P-949 are the pressure channels used to generate a Safety Injection Actuation. Per A-MI-87, the bistables are tripped so the logic goes from 2 out of 3 to 1 out of 2. With bistables tripped for P-945, the failure high of P-949 would complete the logic. Options B and C is incorrect because MSIV closure uses P-946, P-948, and P-950. Option D is incorrect because Containment Spray logic requires 1 out of 2, 3 times to actuate (i.e. 3 signals) and these failures would only generate 2 of the required 3 signals.

Comments
Reviewed by dtb 3/16-Validated 3/26

Question #3

Question Source	Facility Exam Bank	Question Modification Method	
Question Source Comments:			
Material Required for Examination:			
Question Topic:	Containment Pressure logics		

Containment pressure instrument PT-LM-100C has failed downscale. All appropriate actions of 1OM-1.4.IF, Instrument Failure Procedure, have been completed.

Subsequently PT-LM-100D fails upscale.

Which of the following lists all expected actions?

a. CIA and SI

b. CIA, SI and MSLI

c. CIB and MSLI

d. CIA, CIB, SI and MSLI

Ans:	b	Exam	S	Cognitive	Comprehension	
Explanation of Answer						

KA:	013 A2.06	RO Value:	3.7*	SRO Value:	4.0	Section:	SYS	RO Group:	1	SRO Group:	

System/Evolution Title:	Engineered Safety Features Actuation System
KA Statement:	Ability to (a) predict the impacts of the following on the Engineered Safety Features Actuation System and (b) based on those predictions, use procedures to correct, control, or mitigate the consequences of those abnormal operation:
	Inadvertent ESFAS actuation

Reference	Reference Number	Reference Section	Page Number(s)	Revision	Learn. Obj
Instrument Failure Procedure	10M-1.4.IF	II.C	4	Iss 4 Rev 1	
Reactor Protection Trip Logics	LP-SQ-1.1			6	9

From beaver valley for 013k6.01

Record Number
004

QUESTION

While at 100% power, a manual calorimetric is being performed. During the calorimetric, the feedwater temperature is mistakenly recorded 100 degrees lower than the actual temperature. The gain pot on the power range nuclear instruments are adjusted based on this manual calorimetric. SELECT the statement that describes HOW indicated power compares to actual power and if it is more or less conservative with respect to a trip setpoint.

A. Actual power is HIGHER than indicated; LESS conservative.
B. Actual power is LOWER than indicated; LESS conservative.
C. Actual power is HIGHER than indicated; MORE conservative.
D. Actual power is LOWER than indicated; MORE conservative.

Answer	Question Source	Cognitive Level	Question Type	Level
D	Facility exam bank -048ADV013	Comprehension	Direct	BOTH

Tier/Group	K/A#	K/A Rating (RO/SRO)	K/A System/Event
T2/G1	015A1.03	3.7/3.2*	Nuclear Instrumentation

K/A Statement condition
A1-Ability to predict and/or monitor changes in parameters to prevent exceeding design limits) associated with operating the NIS controls including: (CFR 41.5, 45.5)

K/A Statement
A1.03-NIS power indication

Reference	Provided Reference	Objective
RE-11, SP87-125	NONE	0480010201

Objective Statement
PERFORM A NUCLEAR POWER RANGE CHANNEL DAILY CALIBRATION

Explanation
As temperature decreases, enthalpy decreases. As feedwater temperature is the enthalpy of the inlet, this increases the calculated value. This would cause an adjustment upward on the indication, resulting in the indication reading higher than actual. Since the indication input into the protective functions, the trips would occur sooner (more conservative). Options A and B are incorrect because the adjustment is more conservative. Option C is incorrect because indicated power is higher than actual.

Comments
Reviewed by dtb 3/16-Validated 3/26

Question #4

048ADV013;

While at 100% power, a manual calorimetric is being performed. During the calorimetric, the feedwater temperature is mistakenly recorded 100 degrees lower than the actual temperature. The gain pot on the power range nuclear instruments are adjusted based on this manual calorimetric.

SELECT the statement that describes HOW indicated power compares to actual power and if it is more or less conservative with respect to a trip setpoint.

a. Actual power is higher than indicated; less conservative.

b. Indicated power is higher than actual; less conservative.

c. Actual power is higher than indicated; more conservative.

d. Indicated power is higher than actual; more conservative.

ANSWER:

d

TIME ELEMENT: 2 Minutes POINTS: 1.0

REFERENCES:

1) RE-11, Rev. G

USE OF REFERENCES EXPECTED: NO KNPP SYSTEM NUMBER: 048

OBJECTIVE NUMBER: TASK NUMBER: 0150050101

K/A NUMBER: 015000A1.01 K/A RATING: 3.0/3.2

STATIC SIMULATOR CONDITIONS: N/A ASSOCIATED JPM: N/A

QUALIFICATION LEVEL: RO/SRO REV: ORIG

exam bank, Use for 015a1.03

Record Number
005

QUESTION

The following Plant conditions exist:

- The Plant is at 52% and in progress of increasing load to 75% following a plant startup after a refueling shutdown.
- The load pickup to 52% has just been completed when TLA-1, Rod Supervision Alarm, actuates.
- IRPI and Honeywell PPCS indicate Control Rod G11 is at step 100 position, with the remainder of Bank D at 188 steps.
- Bank D Group step counter is at 175 steps
- I&C reports a 1.609 volt DC reading for Rod G11 Conditioning Module voltage.

What are THREE (3) other Control Room indicators or components that may be used to confirm that an actual Control Rod misalignment exists?

A. Power range instrumentation, Delta-flux indicators and Tave.
B. Incore moveable detectors (flux maps), Core exit thermocouples and sub-cooling monitor.
C. Power range instrumentation, Delta-flux indicators and Core exit thermocouples.
D. Incore moveable detectors (flux maps), Core exit thermocouples and Tave.

Answer	Question Source	Cognitive Level	Question Type	Level
C	Facility exam bank -000005201A01	Comprehension	Modified	RO

Tier/Group	K/A#	K/A Rating (RO/SRO)	K/A System/Event
T2/G1	017K4.02	3.1/3.6	In-core Temperature Monitor

K/A Statement condition
K4-Knowledge of ITM system design feature(s) and/or interlock(s) which provide for the following: (CFR 41.7)

K/A Statement
K4.02-Sensing and determination of location core hot spots

Reference	Provided Reference	Objective
A-CRD-49B, Rx Data Man. RD-14.1	Rx Data Man. RD-14.1 page 28	0490010401A01

Objective Statement
GIVEN A ROD MISALIGNMENT, RESPOND IN ACCORDANCE WITH A-CRD-49B

Explanation
Power range instrumentation (drawers or control board meters), Delta-flux indicators, Incore moveable detectors (flux maps) and Core exit thermocouples are the control room indicators listed in A-CRD-049B for the operator to verify a misaligned rod condition exist. A plant transient that has resulted in an abnormal Tave can cause inaccurate IRPI indications until temperature is returned to normal at given power level and stabilized for a given soak period. Tave is not used to confirm an that an actual misalignment exist. The sub-cooling monitor is a distracter

Comments
Reviewed by dtb 3/16-Validated 3/26

Question #5
000005201A01;

The following Plant conditions exist:

- IRPI and Honeywell PPCS indicate Control Rod G11 is at 100 step position, with the remainder of Bank D at 228 steps.
- Bank D Group step counter is at 228 steps.
    - I&C reports a 1.584 volt DC reading for Rod G11 Conditioning Module voltage.
- The Plant is operating at 100%.

What are FOUR other Control Room indicators or components that may be used to confirm that an actual Control Rod misalignment exists?

ANSWER:

[25% each]

Power range instrumentation (drawers or control board meters)

Delta-flux indicators

Core outlet thermocouples

Incore moveable detectors (flux maps)

TIME ELEMENT: 3 Minutes POINTS: 1.0

REFERENCES:

1) OP A-CRD-49B, Rev. N
2) RDM-14, Rev. 05/13/94

USE OF REFERENCES EXPECTED: Yes KNPP SYSTEM NUMBER: 049

OBJECTIVE NUMBER: See K/A number TASK NUMBER: 0000040501

K/A NUMBER: 000005EA2.01 K/A RATING: 3.6/4.0

STATIC SIMULATOR CONDITIONS: N/A

QUALIFICATION LEVEL: SRO/RO REV: A
From KNPP exam bank. Modify for 017k4.02.

Record Number
006

QUESTION

Following a Small Break LOCA, the following conditions are observed:

- Core Exit Thermocouple temperatures are approximately 618°F and stable.
- RCS Hot Leg Temperatures are approximately 550°F and stable.
- Pressurizer Pressure is 1085 psig.
- RCS Cold Leg Temperatures are approximately 330°F and lowering slowly.

What is the status of RCS inventory and core cooling?

The core is ..

A. Covered and being cooled by Natural Circulation.
B. Covered and being cooled by Reflux Boiling.
C. Partially uncovered and being cooled by Natural Circulation.
D. Partially uncovered and being cooled by Reflux Boiling.

Answer	Question Source	Cognitive Level	Question Type	Level
D	INPO exam bank-Palisades 06/14/1999	Analysis	Direct	RO

Tier/Group	K/A#	K/A Rating (RO/SRO)	K/A System/Event
T2/G1	017K5.03	3.7/4.1	In-core Temperature Monitor

K/A Statement condition
K5-Knowledge of the operational implications of the following concepts as they apply to the ITM system: (CFR 41.5/45.7)

K/A Statement
K5.03-Indication of superheating

Reference	Provided Reference	Objective
KNPP IPEOP Background Documents Vol. 1 E-1	NONE	E010010501K04

Objective Statement
GIVEN A LOSS OF REACTOR OR SECONDARY COOLANT, EXPLAIN THE BASIS FOR ACTIONS TAKEN, PER E-1 BACKGROUND DOCUMENT.

Explanation
The core exit temperatures are at a superheated condition, which requires that heat be added to steam. This implies that the core is uncovered. Reflux boiling is occurring based on the difference between core exit temperatures and hot leg temperatures. With no heat removal between the core exit and hot leg temperature detectors, they should indicate nearly the same.

Comments
Reviewed by dtb 3/16-Validated 3/26

Question #6

QuestionStem

Following a small break LOCA, the following conditions are observed:

o Core exit thermocouple temperatures are approximately 618F and stable.
o PCS hot leg temperatures are approximately 550F and stable.
o Pressurizer pressure is 1100 psia.
o PCS cold leg temperatures are approximately 330F and lowering slowly.

What is the status of PCS inventory and core cooling?

Answer The core is partially uncovered and being cooled by reflux boiling.

Distract1
The core is covered and being cooled by natural circulation.

Distract2
The core is partially uncovered being cooled by natural circulation

Distract3
The core is partially covered and being cooled by reflux boiling

QuestionComment
The core exit temperatures are at a superheated condition, which requires that heat be added to steam. This implies that the core is
uncovered. Reflux boiling is occurring based on the difference between core exit temperatures and hot leg temperatures. With no
heat removal between the core exit and hot leg temperature detectors, they should indicate nearly the same. Only reflux boiling
could result in a cooldown of the hot leg temperature indications as steam condenses in the hot leg side of the SG and flows back to

CognitiveLevel	RefMaterial
Y	

Palisades 1	AbbrevLocName	ExamDate
		06/14/1999

KaNumber	KaSegment1	KaSegment2	KaSegment3	KaSegment4	KaSegment5	KaRevision
..017.K5.03		017	K5	03		

INPO exam bank

Record Number
007

QUESTION

The following Plant conditions exist:

- Reactor Trip/Safety Injection has occurred.
- Main Steam Line break in Containment.
- Containment pressure is 4.5 psig.
- Containment humidity is 100%.
- Both RXCPs are running.

Which ONE (1) of the following is the concern if the Containment Fan Coil Units Emergency Discharge Dampers RBV-150 A and B both failed to OPEN and remained in the CLOSED position?

A. RXCP B overheating.
B. Loss of cooling to Shroud Coolers if Natural Circulation Cooldown is required.
C. Reverse airflow through the Containment Fan Coil Unit causing damage to the Containment Fan Coils Unit motors.
D. Damage to the duct work could reduce Containment cooling due to the lack of air mixing in Containment.

Answer	Question Source	Cognitive Level	Question Type	Level
D	Facility exam bank-022000102A01 & 018ADV002	Analysis	Modified	BOTH

Tier/Group	K/A#	K/A Rating (RO/SRO)	K/A System/Event
T2/G1	022K3.01	2.9*/3.2*	Containment Cooling

K/A Statement condition
K3-Knowledge of the effect that a loss or malfunction of the CCS will have on the following: (CFR 41.7, 45.6)

K/A Statement
K3.01-Containment equipment subject to damage by high or low temperature, humidity, and pressure

Reference	Provided Reference	Objective
USAR 6.3, System Description 18, M602	NONE	0180000001K02

Objective Statement
DISCUSS THE DESIGN CHARACTERISTICS OF THE REACTOR BUILDING VENTILATION SYSTEM, FOR ANY MODE OF OPERATION, PER SYSTEM DESCRIPTION 18 AND USAR SECTIONS 5.3, 5.4, 6.3, AND 14.3.9.

Explanation
The purpose of the Containment Fan Coil Units Emergency Discharge Dampers RBV-150 A and B is to provided cooled airflow and mixing of the air. Due to the cooling of the air, condensation forms and reduces Containment pressure. RBV-150s are opened to ensure Containment cooling in event Containment pressure collapses QA2 duct work. Option A is incorrect because this failure would not stop airflow to the RXCP Vault. Option B is incorrect because Containment Fan Coil Units operation only effects Service water flow to the Shroud Cooler, not airflow. Option C is incorrect as the Containment Fan Coil Unit as the units are running and would overcome any reverse flow.

Comments
Reviewed by dtb 3/16-Validated 3/26

Question #7

022000102A01;

The following Plant conditions exist:

New Qst when done

- Reactor Trip/Safety Injection has occurred.
- Main Steam Line break in Containment.
- Containment pressure is 4.5 psig.
- Containment humidity is 100%.

What actions should be verified based on these conditions?

a. RBV-150A, B, C, and D, CFCU Emergency Discharge Dampers, are open.
b. RBV-100A, B, C, and D, CFCU to Refueling Floor, are open.
c. Containment Dome and Vent Fans operating.
d. Containment Purge and Vent Fans operating.

ANSWER: a.

TIME ELEMENT: 1 Minute POINTS: 1.00

REFERENCES:

1) OP A-RBV-18, Rev. L
2) IPEOP E-0, Rev H

USE OF REFERENCES EXPECTED: Yes KNPP SYSTEM NUMBER: 18
OBJECTIVE NUMBER: See K/A number TASK NUMBER: 0220010101
K/A NUMBER: 022000A1.02 K/A RATING: 3.2/3.5
STATIC SIMULATOR CONDITIONS: N/A ASSOCIATED JPM: N/A
QUALIFICATION LEVEL: RO/SRO REV:

018ADV002;
Which ONE of the following is the major concern if the Containment Fan Coil Units Emergency Discharge Dampers RBV-150 A and B both failed OPEN during normal 100% power operations?

a. Reverse air flow through the Containment Fan Coil Unit.
b. Overheating of the Reactor Vessel Gap and Nuclear Instrumentation.
c. Hot air stratification in the Containment Dome.
d. RXCP B overheating.

ANSWER: d.

TIME ELEMENT: 2 Minutes POINTS: 1.0
REFERENCES:

1) System Description, Chap. 18, pg. 22 U WPS-RBV1, Rev. Orig
2) Dwg. M-602, Rev. AV

USE OF REFERENCES EXPECTED: No KNPP SYSTEM NUMBER: 018
OBJECTIVE NUMBER: N/A TASK NUMBER: 0220040101
K/A NUMBER: 022000A4.03 K/A RATING: 3.8/3.3
STATIC SIMULATOR CONDITIONS: N/A ASSOCIATED JPM: N/A
QUALIFICATION LEVEL: RO/SRO REV: B
Combine for 022k3.01 exam bank

Record Number
008

QUESTION

The following Plant conditions exist:

- A LOCA with the loss of off-site power has occurred.
- pressurizer Level is 20% and slowly increasing with 150 gpm injection flow.
- The Operators are performing a cooldown and depressurization of the RCS per ES-1.2, Post LOCA Cooldown and Depressurization

After TWO (2) minutes the following annunciator activate:

47023B, RWST LEVEL LOW
47032C, PRESSURIZER HIGH LEVEL REACTOR TRIP
47041E, PRESSURIZER LEVEL HIGH
47042E, PRESSURIZER LEVEL >55%

At this time the STA identifies an ORANGE path on INTEGRITY. Which of the following has the highest priority to implement?

A. FR-P.1, Response to Imminent Pressurized Thermal Shock Condition.
B. ES-1.3, Transfer to Containment Sump Recirculation.
C. ECA1.1, Loss of Emergency Coolant Recirculation.
D. Continue in ES-1.2, Post LOCA Cooldown and Depressurization.

Answer	Question Source	Cognitive Level	Question Type	Level
B	N/A	Analysis	New	SRO

Tier/Group	K/A#	K/A Rating (RO/SRO)	K/A System/Event
T1/G2	009 2.4.45	3.3/3.6	Small Break LOCA

K/A Statement condition
2.4-Emergency Procedures /Plan

K/A Statement
2.4.45-Ability to prioritize and interpret the significance of each annunciator or alarm.

Reference	Provided Reference	Objective
ES-1.3	NONE	1190070502A01

Objective Statement
IMPLEMENT THE IPEOP'S AS THE IPEOP COORDINATOR IN ACCORDANCE WITH UG-0.

Explanation
The Operator is directed to ES-1.3 by the E-1 QRF. ES-1.3, step 1-6; take precedence over the CSF Status trees. Option A is incorrect because ES-1.3, step 1-6, takes precedence over the Orange path. Option C is incorrect because ECA-1.1 entry conditions are not met. Option D is incorrect because QFR directs the operator to ES-1.3

Comments
Reviewed by dtb 3/16-Validated 3/26

Record Number
009

QUESTION

Assume the plant is operating at normal 100% power with NO equipment out of service.

Which ONE (1) of the following indicates the effect that the initiation of ONLY Safety Injection TRAIN A signal will have on the Main Feedwater System?

A. Both Feedwater Pumps TRIP
FW-12A ONLY [Main Feedwater Header Isolation Valves] CLOSE
FW-7A & FW-7B [Main Feedwater Regulating Valves] CLOSE
FW-10A & FW-10B [Main Feedwater Bypass Control Valves] CLOSE

B. ONLY Feedwater Pump A TRIPS
FW-12A ONLY [Main Feedwater Header Isolation Valve] CLOSE
FW-7A & FW-7B [Main Feedwater Regulating Valves] CLOSE
FW-10A & FW-10B [Main Feedwater Bypass Control Valves] CLOSE

C. Both Feedwater Pumps TRIP
FW-12A & FW-12B [Main Feedwater Header Isolation Valves] CLOSE
FW-7A ONLY [Main Feedwater Regulating Valve] CLOSE
FW-10A & FW-10B [Main Feedwater Bypass Control Valves] CLOSE

D. ONLY Feedwater Pump A TRIPS
FW-12A & FW-12B [Main Feedwater Header Isolation Valve] CLOSE
FW-7A ONLY [Main Feedwater Regulating Valve] CLOSE
FW-10A ONLY [Main Feedwater Bypass Control Valve] CLOSE

Answer	Question Source	Cognitive Level	Question Type	Level
A	Facility exam bank -05AADV027	Comprehension	Direct	RO

Tier/Group	K/A#	K/A Rating (RO/SRO)	K/A System/Event
T2/G1	059A4.12	3.4/3.5	Main Feedwater

K/A Statement condition
A4-Ability to manually operate and monitor in the control room: (CFR 41.7/45.5 to 45.8)

K/A Statement
A4.12-Initiation of automatic feedwater isolation

Reference	Provided Reference	Objective
E-1625	NONE	05A0000001K04

Objective Statement
EXPLAIN THE RESPONSE TO THE OPERATION OF ALL MAIN FEEDWATER SYSTEM CONTROLS IN ACCORDANCE WITH LOGIC DIAGRAMS/SCHEMATICS: E1624, E1625, and E2006.

Explanation
On either train of SI actuation both Feedwater pumps trip, FW-7A&B close, and FW-10A&B close. FW-12A closes on SI Train A only. Options B & D are incorrect because both Feedwater pumps Trip. Option C is incorrect because both FW-7A&B close.

Comments
Reviewed by dtb 3/16-Validated 3/26

Question #9
05AADV027;

Assume the plant is operating at normal 100% power with no equipment out of service.

Which ONE (1) of the following indicates the effect that the initiation of ONLY Safety Injection TRAIN A signal will have on the Main Feedwater System?

a. Both Feedwater Pumps TRIP
FW-12A & FW-12B [Main Feedwater Header Isolation Valves] CLOSE
FW-7A & FW-7B [Main Feedwater Regulating Valves] CLOSE
FW-10A & FW-10B [Main Feedwater Bypass Control Valves] CLOSE

b. ONLY Feedwater Pump A TRIPS
FW-12A ONLY [Main Feedwater Header Isolation Valve] CLOSE
FW-7A & FW-7B [Main Feedwater Regulating Valves] CLOSE
FW-10A & FW-10B [Main Feedwater Bypass Control Valves] CLOSE

c. Both Feedwater Pumps TRIP
FW-12A & FW-12B [Main Feedwater Header Isolation Valves] CLOSE
FW-7A ONLY [Main Feedwater Regulating Valve] CLOSE
FW-10A & FW-10B [Main Feedwater Bypass Control Valves] CLOSE

d. ONLY Feedwater Pump A TRIPS
FW-12A ONLY [Main Feedwater Header Isolation Valve] CLOSE
FW-7A ONLY [Main Feedwater Regulating Valve] CLOSE
FW-10A ONLY [Main Feedwater Bypass Control Valve] CLOSE

ANSWER:

a

TIME ELEMENT: 3 Minutes POINTS: 1.0

REFERENCES:

1) E-1625, Rev. P

USE OF REFERENCES EXPECTED: NO KNPP SYSTEM NUMBER: 05A

OBJECTIVE NUMBER: 05A0000001K04 TASK NUMBER: 05A0000001

K/A NUMBER: N/A K/A RATING: N/A

STATIC SIMULATOR CONDITIONS: N/A ASSOCIATED JPM: N/A

QUALIFICATION LEVEL: RO/SRO REV: ORIG

For 059A4.12

Record Number
010

QUESTION

The plant is operating at 100% power. Turbine Impulse Pressure channel P-485 fails low. Which ONE (1) of the following describes how the feedwater system is affected by this failure?

A. FW-7A/7B, Main FW Control Valves, continue to control S/G level at 44%.
B. FW-7A/7B, Main FW Control Valves, position to control S/G level at 33% and manual action is required to restore S/G level to 44%.
C. FW-7A/7B, Main FW Control Valves, position to control S/G level at 33% and S/G level returns to 44% after signal times out.
D. FW-7A/7B, Main FW Control Valves, position to control S/G level at 44% and manual action is required to restore S/G level to 33%.

Answer	Question Source	Cognitive Level	Question Type	Level
B	FACILITY EXAM BANK-05AADV026	Comprehension	Direct	BOTH

Tier/Group	K/A#	K/A Rating (RO/SRO)	K/A System/Event
T2/G1	059A4.08	3.0*/2.9*	Main Feedwater

K/A Statement condition
A4-Ability to manually operate and monitor in the control room: (CFR 41.7, 45.5-45.8)

K/A Statement
A4.08-Feed regulating valve controller

Reference	Provided Reference	Objective
System Description 05A, XK100-554	NONE	05A0000001K04

Objective Statement
EXPLAIN THE RESPONSE TO THE OPERATION OF ALL MAIN FEEDWATER SYSTEM CONTROLS IN ACCORDANCE WITH LOGIC DIAGRAMS/SCHEMATICS: E1624, E1625, AND E2006.

Explanation
P-485 supplies the turbine power indication to the Feedwater control circuit; a failure low would indicate low power. The lower power S/G level setpoint is 33%, which would become the automatic control setpoint. S/G Bypass CV Level Deviation Alarms will actuate on a 5% level deviation between the selected setpoint and actual level. At 100% power, this is set at 44% to provide a warning of any deviation from setpoint and would typically alarm due to the magnitude of the transient. Option A is incorrect due to Feedwater control system would control at 33%. Option C is incorrect because the signal would not time out. Option D is incorrect because normal level for 100% power is 44%.

Comments
Reviewed by dtb 3/16-Validated 3/26

Question #10
05AADV026;

The plant is operating at 100% power. Turbine Impulse Pressure channel P-485
fails low. Which ONE (1) of the following describes how the feedwater control
system is affected by this failure? Assume ÞNOÝ operator action.

a. FW-7A/7B, Main FW Control Valves, position to control S/G level at 20% and S/G Bypass CV Level Deviation Alarms are actuated for both S/Gs

b. FW-7A/7B, Main FW Control Valves, position to control S/G level at 33% and S/G Program Level Deviation Alarms are actuated for both S/Gs

c. FW-7A/7B, Main FW Control Valves, position to control S/G level at 40% and S/G Program Level Deviation Alarms are actuated for both S/Gs

d. FW-7A/7B, Main FW Control Valves, position to control S/G level at 44% and S/G Bypass CV Level Deviation Alarms are actuated for both S/Gs

ANSWER:

B

TIME ELEMENT: 2.0 Minutes POINTS: 1.0

REFERENCES:

1) SYS DESC 05A, REV B

USE OF REFERENCES EXPECTED: NO KNPP SYSTEM NUMBER: 05A

OBJECTIVE NUMBER: 05A0000001K02 TASK NUMBER:

K/A NUMBER: K/A RATING:

STATIC SIMULATOR CONDITIONS: N/A ASSOCIATED JPM: N/A

QUALIFICATION LEVEL: RO/SRO REV: ORIG
FOR 059 A4.08

Record Number
011

QUESTION

KNPP is at 70% power with both Main Feed Pumps and both Condensate Pumps running. If Condensate Pump B trips, which ONE (1) of the following actions will occur?

A. MFW Pump A trips and Turbine runback occurs
B. MFW Pump B trips and Turbine runback occurs
C. MFW Pump A trips and NO Turbine runback occurs
D. MFW Pump B trips and NO Turbine runback occurs

Answer	Question Source	Cognitive Level	Question Type	Level
C	FACILITY EXAM BANK-05AADV006	Comprehension	Modified	BOTH

Tier/Group	K/A#	K/A Rating (RO/SRO)	K/A System/Event
T2/G1	056K1.03	2.6*/2.6	Condensate

K/A Statement condition
K1-Knowledge of the physical connections and/or cause-effect relationships between the Condensate system and the following systems: (CFR 41.2-41.9, 45.7-45.8)

K/A Statement
K1.03-MFW

Reference	Provided Reference	Objective
System Description 05A, DWG. E-1624	NONE	05A0000001K04

Objective Statement
EXPLAIN THE RESPONSE TO THE OPERATION OF ALL MAIN FEEDWATER SYSTEM CONTROLS IN ACCORDANCE WITH LOGIC DIAGRAMS/SCHEMATICS: E1624, E1625, AND E2006.

Explanation
Only MFW Pump A is provided a trip on a loss of Condensate pump with 2 MFW Pumps running. Turbine Runback for a tripped MFW Pump does not occur until >72% turbine power. Option A is incorrect because a turbine runback will not occur. Option B is incorrect due to MFW Pump A tripping and no runback occurring. Option d is incorrect due to MFW Pump A tripping.

Comments
Reviewed by dtb 3/16-Validated 3/26

Question #11
05AADV006;

KNPP is at full power with both Main Feed Pumps and both Condensate Pumps running. If one Condensate Pump trips, which ONE (1) of the following actions
will occur?

a. Turbine runback

b. Both main feed pumps trip

c. Motor-driven AFW pumps start

d. Heater Drain Pumps trip

ANSWER:

a

TIME ELEMENT: 2 Minutes POINTS: 1.0

REFERENCES:

1) System Description, Chap. 5A, pg. 5A-28, Rev. A
2) Dwg. E-1624, Rev. S

USE OF REFERENCES EXPECTED: No KNPP SYSTEM NUMBER: 05A

OBJECTIVE NUMBER: N/A TASK NUMBER: 0590070101

K/A NUMBER: 059000K4.02 K/A RATING: 4.2/3.5

STATIC SIMULATOR CONDITIONS: N/A ASSOCIATED JPM: N/A

QUALIFICATION LEVEL: RO/SRO REV: B

For 056k1.03

Record Number
012

QUESTION

During the performance of SP-05B-104 Task 2, Motor Driven Auxiliary FW Pump and Valve Test-IST, the AFW Pump A has just been stopped at the DSP. The plant IMMEDIATELY experiences a Loss of Off-Site Power. How is the starting of AFW Pump A affected?

A. AFW Pump A will start on Blackout sequence.
B. AFW Pump A will start on Steam Generator low level only.
C. AFW Pump A will NOT start due a load shed signal.
D. AFW Pump A will NOT start due to the local/remote switch position.

Answer	Question Source	Cognitive Level	Question Type	Level
D	FACILITY EXAM BANK-234STAT000	Memory	Direct	BOTH

Tier/Group	K/A#	K/A Rating (RO/SRO)	K/A System/Event
T2/G1	061K4.06	4.0*/4.2*	Auxiliary/Emergency Feedwater

K/A Statement condition
K4-Knowledge of AFW design feature(s) and/or interlock(s) which provide for the following: (CFR 41.7)

K/A Statement
K4.06-AFW startup permissives

Reference	Provided Reference	Objective
E1602	NONE	05B0000001K02

Objective Statement
EXPLAIN THE RESPONSE TO THE OPERATION OF ALL AUXILIARY FEEDWATER SYSTEM CONTROLS IN ACCORDANCE WITH LOGIC DIAGRAMS/SCHEMATICS: E1602, E2802, XK100-149, and XK100-157.

Explanation
The Local/Remote switch in Local will block all automatic starts of AFW Pump A due to the "and" gate logic requiring the switch to be in Remote position. Option A is incorrect because even though it will receive an auto start on Blackout sequence step 6, it is blocked by the Local/Remote switch. Option B is incorrect because even though Low S/G level would most likely be received it is also blocked by the Local/Remote switch. Option C is incorrect because the load rejection signal is blocked by the Local/Remote switch.

Comments
Reviewed by dtb 3/16-Validated 3/26

Question #12

During the performance of SP-05B-104 Task 2, Motor Driven Auxiliary FW Pump and
Valve Test-Ist, the 1A AFW Pump has just been stopped at the DSP. The plant
experiences a Loss of Off-Site Power. How and why is the sequenced
starting of 1A AFW Pump, in response to the blackout signal, affected?

ANSWER:

The pump will not start.
[50%]

AND

With the DSP switch in "local," the blackout signal is blocked.
(The "and" box is not satisfied.)
[50%]

TIME ELEMENT: 6 Minutes POINTS: 1.00

REFERENCES:

1) Dwg. E1602, Rev. AJ

USE OF REFERENCES EXPECTED: Yes KNPP SYSTEM NUMBER: 05B

OBJECTIVE NUMBER: See K/A number TASK NUMBER: 0610110101

K/A NUMBER: 061000K4.02 K/A RATING: 4.0/4.2

STATIC SIMULATOR CONDITIONS: N/A

QUALIFICATION LEVEL: SRO/RO REV: ORIG

For 061K4.06 - MODIFY

Record Number
013

QUESTION

The following Plant conditions exist:

- The Plant has tripped from 100% power due to an inadvertent SI.
- IPEOP E-0, "Reactor Trip or Safety Injection", has been completed.
- The current procedure in effect is IPEOP ES-1.1, "SI Termination."
- The level in both Steam Generators is 3%.

At this time AFW Pump A trips on overcurrent. The CRS chooses to continue feeding both Steam generators. What Operator actions, if any, are necessary to provide both Steam Generators with Feedwater? (Assume NO procedure steps other than IPEOP steps have been performed.)

A. NO action is required, both Steam Generators will continue to be fed from the AFW Pump B since the AFW cross-connect valves, AFW-10A and AFW-10B, are normally open.
B. Both of the AFW cross-connect valves, AFW-10A and AFW-10B, must be opened since they will have been shut when the Turbine Driven AFW pump was stopped.
C. The Turbine Driven AFW Pump must be started and the AFW cross-connect valve, AFW-10A, must be opened.
D. The Turbine Driven AFW Pump must be started and the AFW cross-connect valve, AFW-10A, must be opened and the AFW cross-connect valve, AFW-10B, must be closed.

Answer	Question Source	Cognitive Level	Question Type	Level
A	FACILITY EXAM BANK-192STAT000	Comprehension	Modified	BOTH

Tier/Group	K/A#	K/A Rating (RO/SRO)	K/A System/Event
T2/G1	061K6.02	2.6/2.7	Auxiliary/Emergency Feedwater

K/A Statement condition
K6-Knowledge of the effect of a loss or malfunction of the following will have on the AFW components: (CFR 41.7, 45.7)

K/A Statement
K6.02-Pumps

Reference	Provided Reference	Objective
M-205, SYS DESC CHAP 05B	NONE	05B0000004K04

Objective Statement
DESCRIBE THE SYSTEM ARRANGEMENT AND FLOW PATHS WHICH ENABLE THE AFW SYSTEM TO FULFILL ITS FUNCTION (i.e., DRAW A ONE-LINE DIAGRAM) PER M-204 AND M-205.

Explanation
Explanation: The key to getting this correct is the recognition that the system is normally lined up with the cross-connect valves open even though the TD AFW pump will have been stopped. It is also necessary that the candidate understand that the running MD AFW pump is adequate to supply both S/Gs.

Comments
Reviewed by dtb 3/16-Validated 3/26

Question #13
192STAT000;

THIS QUESTION DOES NOT RELATE TO THE CURRENT STATIC SIMULATOR CONDITIONS.

The Plant has Tripped from 100% power due to an inadvertent SI. Immediate actions of IPEOP E-0, "Reactor Trip or Safety Injection", have been completed.
At this time 1A AFW Pump Trips on overcurrent. What Operator actions are necessary to control A Steam Generator level independently from B Steam Generator?

ANSWER:

The Turbine Driven AFW Pump must be started.
[33%]

AND

1A S/G level must be controlled by cycling AFW-10A, AFW Train A Crossover Valve.
[33%]

AND

Closing AFW 10B, AFW Train B Crossover Valve
[33%]

TIME ELEMENT: 2 Minutes POINTS: 1.00

REFERENCES:

1) Dwg. M-205, Rev. AK
2) SYS DESC CHAP 05B, PG 05B-27, Rev. 1

USE OF REFERENCES EXPECTED: No KNPP SYSTEM NUMBER: 05B

OBJECTIVE NUMBER: See K/A number TASK NUMBER: 0610060101

K/A NUMBER: 061000A2.04 K/A RATING: 3.6/3.5

STATIC SIMULATOR CONDITIONS: N/A

QUALIFICATION LEVEL: RO/SRO REV: ORIG

FOR 061K6.02 MODIFY

Record Number
014

QUESTION

The following Plant conditions exist:

- A release of CVC Monitor Tank B is in progress.
- Annunciator 47011-B, RADIATION INDICATION HIGH ALARM, has actuated.
- R-18, Waste Disposal Liquid Effluent Monitor, is alarming.

Which of the following states the required IMMEDIATE action, if any, after verifying the R-18 reading is above the alarm setpoint?

A. NO action required, this is an expected alarm.
B. Direct the Duty Chemist to sample CVC Monitor Tank B.
C. Direct the Health Physics to survey the area around R-18 to verify the alarm.
D. Verify the WD-19/CV-31138, WD to Circ Water valve, automatically closed.

Answer	Question Source	Cognitive Level	Question Type	Level
D	Prairie Island exam-May 2000	Memory	Direct	RO

Tier/Group	K/A#	K/A Rating (RO/SRO)	K/A System/Event
T2/G1	068 2.4.50	3.3/3.3	Liquid Radwaste

K/A Statement condition
2.4-Emergency Procedures /Plan

K/A Statement
2.4.50-Ability to verify system alarm setpoints and operate controls identified in the alarm response manual.

Reference	Provided Reference	Objective
A-RM-45	NONE	0450160401K01

Objective Statement
LIST THE IMMEDIATE OPERATOR ACTIONS, GIVEN AN R-18 RADIATION INDICATION HIGH CONDITION IN ACCORDANCE WITH A-RM-45.

Explanation
A high alarm on R-18 provides an automatic closure of WD-19. The operator is expected to verify the automatic function of the system for alarm condition. Option A is incorrect because high radiation alarms are not expected during discharges. Option B is a correct action to restart the discharge but is not an initial action so is thus incorrect. Option C is incorrect because this is a contained liquid and a survey would not determine the alarm condition.

Comments
Reviewed by dtb 3/16-Validated 3/26

Question #14

Given the following conditions:

- A release of 121 ADT Monitor Tank is in progress.
- Annunciator 47022-0108, HI RADIATION TRAIN B PANEL ALARM, has actuated.
- R-18, Waste Disposal Liquid Effluent Monitor, is alarming.

Which of the following states the required initial action, if any, after verifying the R-18 reading is above the alarm setpoint?

*A. NO action required, this is an expected alarm.

*B. Direct the Duty Chemist to sample the effluent waste stream.

*C. Verify the Waste Liquid Common Discharge Header valve automatically closed.

*D. Verify the Waste Liquid Common Discharge Header keylock release valve automatically closed.

For 068 g 2.4.50 FROM INPO EXAM BANK

Record Number
015

QUESTION

A normal plant startup is in progress with the following conditions:

- Pressurizer Pressure is at 1585 psig and slowly decreasing
- Pressurizer Level is at 30% and slowly decreasing
- PRT Pressure is 5 psig

Assume pressurizer steam quality is 100%

Which ONE (1) of the following is the CURRENT expected PORV tailpipe temperature if a Pressurizer PORV is leaking by?

A. 605°F
B. 547°F
C. 245°F
D. 228°F

Answer	Question Source	Cognitive Level	Question Type	Level
C	FROM 12/97 EXAM	Analysis	Direct	BOTH

Tier/Group	K/A#	K/A Rating (RO/SRO)	K/A System/Event
T2/G2	010K5.02	2.6/3.0*	Pressurizer Pressure Control

K/A Statement condition
K5-Knowledge of the operational implications of the following concepts as the apply to the PZR PCS: (CFR 41.5, 45.7)

K/A Statement
K5.02-Constant enthalpy expansion through a valve

Reference	Provided Reference	Objective
Steam tables	Steam tables	0360050401A01

Objective Statement
GIVEN LEAKAGE FROM PR-1A(B), RESPOND IN ACCORDANCE WITH A-RC-36D.

Explanation
Choice a is saturation temperature for the given pressure. Choice b is normal Tave for no load conditions Choice d is saturation temperature for 5 psig.

Comments
Reviewed by dtb 3/16-Validated 3/26

Question #15
042
y
n
n
y

Steam tables
000074 EK1.04
Knowledge of the operational implications of: Use of steam tables, including subcooled, saturated, and superheated regions.
3.7
4.1
both
A normal plant startup is in progress with the following conditions:

- Pressurizer Pressure is at 1585 psig and slowly decreasing
- Pressurizer Level is at 30% and slowly decreasing
- PRT Pressure is 5 psig

Assume pressurizer steam quality is 100%

Which ONE (1) of the following is the CURRENT expected PORV tailpipe temperature if a Pressurizer PORV is leaking by?

a. 609□F

b. 547□F

c. 250□F

d. 220□F

c
New
2050000001K06
Describe the unique parameter trends for LOCAs in the pressurizer steam space.

For 010k5.02 knpp 12-97 exam

Record Number
016

QUESTION

The following Plant conditions exist:

- Reactor is at 100% power
- Annunciator 47043B, PRESSURIZER RELIEF TANK ABNORMAL, is actuated due to low PRT Level.
- PRT level indication is 69% and slowly decreasing.
- PRT temperature is 124 degrees Fahrenheit.

How will PRT pressure be affected if a PRZR PORV fails OPEN?

A. PRT pressure will be lower due to the lowering liquid volume in the PRT.
B. PRT pressure will only increase slightly due to compression of the gas volume.
C. PRT pressure will remain constant due to the remaining water absorbing the steam.
D. PRT pressure will increase to over-pressurization due to an insufficient water volume to cool the steam

Answer	Question Source	Cognitive Level	Question Type	Level
D	FACILITY EXAM BANK -064STAT000	Comprehension	Direct	BOTH

Tier/Group	K/A#	K/A Rating (RO/SRO)	K/A System/Event
T2/G2	010K1.05	3.4/3.6	Pressurizer Pressure Control

K/A Statement condition
K1-Knowledge of the physical connections and/or cause-effect relationships between the PZR PCS and the following systems: (CFR 41.2-41.9, 45.7-45.8)

K/A Statement
K1.05-PRTS

Reference	Provided Reference	Objective
System Description 36	NONE	0360000001K34

Objective Statement
DISCUSS THE DESIGN CHARACTERISTICS OF THE PRESSURIZER AND PRT SYSTEM FOR ANY MODE OF OPERATION PER SYSTEM DESCRIPTION 36 AND USAR SECTION 4.2.

Explanation
The design of the PRT is that with normal levels and temperatures, a lifting relief will not overpressure the PRT. At a reduced level the overpressurization would occur. Option A is incorrect because the lower level would reduce the mass available to quench the steam from the PORV. Option B is incorrect because the added mass and temperature would compress and heat the gas bubble, which would significantly increase pressure. Option C is incorrect because the added heat and increased mass in the lower PRT quench volume would significantly increase pressure.

Comments
Reviewed by dtb 3/16-Validated 3/26

Question #16
THIS QUESTION DOES NOT RELATE TO THE CURRENT STATIC SIMULATION CONDITIONS.

The following Plant conditions exist:

- Reactor is at 100% power.
- Annunciator 47043B, PRESSURIZER RELIEF TANK ABNORMAL, is actuated due to low PRT level.
- PRT level indication is 71% and decreasing.
- PRT temperature is 120 degrees Fahrenheit.

How will PRT pressure be affected if a PRZR PORV fails OPEN?

a. PRT pressure will be lower due to the lowering liquid volume in the PRT.

b. PRT pressure will only increase slightly due to compression of the gas volume.

c. PRT pressure will remain constant due to the remaining water absorbing the steam.

d. PRT pressure will increase to over-pressurization due to an insufficient water volume to cool the steam.

ANSWER:

d.

TIME ELEMENT: 3 Minutes POINTS: 1.00

REFERENCES:

1) SYS DESC CHAP 36, Rev. Orig.
2) Alarm Response 47043B, Rev. Orig.

USE OF REFERENCES EXPECTED: Yes KNPP SYSTEM NUMBER: 36

OBJECTIVE NUMBER: See K/A number TASK NUMBER: 0070030101

K/A NUMBER: 007000K4.01 K/A RATING: 3.0/3.0

STATIC SIMULATOR CONDITIONS: 000 ASSOCIATED JPM: N/A

QUALIFICATION LEVEL: RO/SRO REV: A

For 010k1.05

Record Number
017

QUESTION

Degassing of the reactor coolant system is in progress. Gas Decay Tank A is on FILL and at 98 psig. Gas Decay Tank A is increasing at about 4 psig/hour. Gas Decay Tank B is selected for STANDBY. Four hours later, you note the following valve alignment:

- Gas Decay Tank A inlet valve WG-10A, Waste Gas to Gas Decay Tank A, is CLOSED
- Gas Decay Tank B inlet valve WG-10B, Waste Gas to Gas Decay Tank B, is OPEN
- Gas Decay Tank C inlet valve WG-10C, Waste Gas to Gas Decay Tank 1C, is CLOSED
- Gas Decay Tank D inlet valve WG-10D, Waste Gas to Gas Decay Tank 1D, is CLOSED

What caused the current valve alignment?

A. Gas Decay Tank A pressure increased to 110 psig.
B. Actuation of Zone Special Ventilation (Zone SV)
C. The operating Waste Gas Compressor moisture separator pressure reached 110 psig.
D. The gas analyzer detected > 2% oxygen in Gas Decay Tank A being filled.

Answer	Question Source	Cognitive Level	Question Type	Level
A	From Point Beach exam- 08/02/1999	Comprehension	Direct	BOTH

Tier/Group	K/A#	K/A Rating (RO/SRO)	K/A System/Event
T2/G1	071A3.02	2.8/2.8	Waste Gas Disposal

K/A Statement condition
A3-Ability to monitor automatic operation of the Waste Gas Disposal System including: (CFR 41.7, 45.5)

K/A Statement
A3.02-Pressure-regulating system for waste gas vent header

Reference	Provided Reference	Objective
SYS DESC CHAP 32B, N-GWP-32B, N-GWP-32B-CL	NONE	32B0000001K01

Objective Statement
DISCUSS THE DESIGN CHARACTERISTICS OF THE GASEOUS WASTE SYSTEM FOR ANY MODE OF OPERATION PER SYSTEM DESCRIPTION 32B AND USAR SECTIONS 11 AND 14.2.2.

Explanation
When Gas Decay Tank pressure reached 110 psig WG-10x on the tank selected for fill closes and WG-10x opens on the tank selected for standby. Option B is incorrect because R-13 or R-14 high alarms only effect Decay tank releases by closing WG-36 in the waste Gas system. Option C is incorrect because the only system response upon reaching 110 psig in the Waste Gas compressor moisture separator is the vent WG-102x to the CVCS holdup tanks opens. Option D is incorrect because a concentration of > 2% oxygen detected by the gas analyzer only causes alarm notification of the condition.

Comments
Reviewed by dtb 3/16-Validated 3/26

Question #17

QuestionStem

Degassing of the reactor coolant system has commenced. Gas Decay Tank #1 is in service and at 80 psig and increasing at 4
psig/hour. Four hours after commencing degassing, you note the following valve alignment:

o #1 GDT inlet valve is closed
o #2 GDT inlet valve is open

What caused the valve alignment?

Answer #1 GDT tank pressure increased to 95 psig.

Distract1 receipt of a high alarm on RE-114, El. 26' PAB West area monitor.

Distract2 back pressure on the waste gas compressor decreased to 35 psig.

Distract3 RE-214, auxiliary building vent exhaust gas monitor, came in violet on RMS display.

QuestionComment

CognitiveLevel **RefMaterial**
N

ExamDate 08/02/1999

AbbrevLocName	KaNumber	KaSegment1	KaSegment2	KaSegment3	KaSegment4	KaSegment5	KaRevision
Point Beach 1	..071000.A4.1		071000	A4	16		6

for 071a3.02

Record Number
018

QUESTION

R-14, Aux Bldg. Vent Exhaust Radiation Monitor, fails HIGH.

What effect does this failure have on the Waste Gas system?

A. All Waste Gas Tank Outlet Valves to the cover gas header CLOSE if open and nitrogen becomes the cover gas supply.
B. WG-36 is tripped CLOSED if a Gas Decay Tank discharge is in progress.
C. Gas Decay Tank Gas Analyzer Supply Valves WG-200A, B, C, D CLOSE
D. All Waste Gas Tank Valves (fill and cover gas supply) CLOSE, the Waste Gas compressors trip and Nitrogen becomes the Cover Gas supply.

Answer	Question Source	Cognitive Level	Question Type	Level
B	N/A	Memory	New	BOTH

Tier/Group	K/A#	K/A Rating (RO/SRO)	K/A System/Event
T2/G1	071K1.06	3.1*/3.1	Waste Gas Disposal

K/A Statement condition
K1-Knowledge of the physical connections and/or cause- effect relationships between the Waste Gas Disposal System and the following systems: (CFR 41.2-41.9, 45.7-45.8)

K/A Statement
K1.06-ARM and PRM systems

Reference	Provided Reference	Objective
SYS DESC CHAP 32B, N-GWP-32B, N-GWP-32B-CL, N-RM-45, A-RM-45, OPXK 100-131, OPXK 100-132	NONE	32B0000001K01

Objective Statement
DISCUSS THE DESIGN CHARACTERISTICS OF THE GASEOUS WASTE SYSTEM FOR ANY MODE OF OPERATION PER SYSTEM DESCRIPTION 32B AND USAR SECTIONS 11 AND 14.2.2.

Explanation
Failure of R-14 Aux Bldg. Vent Exhaust causes WG-36 to close and will remain closed until reset. Option A is incorrect because individual Gas Decay Tank valves are not interlocked with radiation monitors. Option C is incorrect because Gas analyzer inlet and outlet valves MG(R)-561 and 563 close not tank isolation on R-14 Aux Bldg. Vent Exhaust high radiation or failure

Comments
Reviewed by dtb 3/16-Validated 3/26

Record Number
019

QUESTION

Inoperability of which ONE (1) of the area radiation monitors would prohibit refueling operations from occurring?

A. R-1, Control Room Area Monitor.
B. R-5, Fuel Handling Area Monitor.
C. R-7, Incore Seal Table Area Monitor.
D. R-10, New Fuel Pit Area Monitor.

Answer	Question Source	Cognitive Level	Question Type	Level
B	N/A	Memory	New	BOTH

Tier/Group	K/A#	K/A Rating (RO/SRO)	K/A System/Event
T2/G1	072K3.02	3.1/3.5	Area Radiation Monitoring

K/A Statement condition
K3-Knowledge of the effect that a loss or malfunction of the ARM system will have on the following: (CFR 41.7, 45.6)

K/A Statement
K3.02-Fuel handling operations

Reference	Provided Reference	Objective
N-FH-53-CLD	NONE	0530030101

Objective Statement
PERFORM A PRE-REFUELING CHECKLIST

Explanation
Explanation: Per N-FH-53-CLD none of the monitors in any of the distracters is required to be operable during refueling operations.

Comments
Reviewed by dtb 3/16-Validated 3/26

Record Number
020

QUESTION

The following Plant conditions exist:

- A small break LOCA has occurred.
- NO RxCPs are running.

The following RCS indications are available:

- Average of the 10 highest core exit thermocouples = 568°F
- Loop Temperatures: TH = 560°F (both loops)
- TC = 522°F (both loops)
- Tave = 541°F (both loops)
- Pressurizer Pressure instruments PT-429, PT-430, PT-431, and PT-449 indicate 1700 psig
- RCS wide-range pressure instruments PT-419 and PT-420 indicate 1231 psig

Operators are directed to determine the RCS subcooling margin due to unavailability of subcooling indication due to failed instruments. Based on these indications, the RCS is:

A. Superheated by greater than 10°F.
B. Superheated by less than 10°F.
C. Subcooled by less than 10°F.
D. Subcooled by greater than 10°F.

Answer	Question Source	Cognitive Level	Question Type	Level
C	FACILITY EXAM BANK -000009239E01	Analysis	Direct	BOTH

Tier/Group	K/A#	K/A Rating (RO/SRO)	K/A System/Event
T2/G2	002K5.09	3.7/4.2	Reactor Coolant

K/A Statement condition
K5-Knowledge of the operational implications of the following concepts as they apply to the RCS: (CFR 41.5/45.7)

K/A Statement
K5.09-Relationship of pressure and temperature for water at saturation and subcooling conditions

Reference	Provided Reference	Objective
STEAM TABLES	STEAM TABLES	NONE

Objective Statement
N/A

Explanation
Explanation: The saturation pressure for the given pressure, 1231 psig (1246 psia) is 572°F. Since the CETs are reading 568°F the RCS is subcooled by approximately 4 DEGF.

Comments
Reviewed by dtb 3/16-Validated 3/26

Question #20
000009239E01;

The following plant conditions exist:

- A small break LOCA has occurred.
- ÞNOÝ RxCPs are running.

The following RCS indications are available:

- Average of the 10 highest core exit thermocouples = 568 degrees Fahrenheit
- Loop Temperatures: TH = 560 degrees Fahrenheit (both loops)
  TC = 522 degrees Fahrenheit (both loops)
  Tave = 540 degrees Fahrenheit (both loops)
- Pressurizer Pressure = 1700 psig
- RCS wide-range pressure = 1231 psig

Operators are directed to determine the RCS subcooling margin due to unavailability of subcooling indication due to failed instruments. Based on these indications, the RCS is:

a. Superheated by greater than 10 degrees Fahrenheit.

b. Superheated by less than 10 degrees Fahrenheit.

c. Subcooled by less than 10 degrees Fahrenheit.

d. Subcooled by greater than 10 degrees Fahrenheit.

ANSWER:

c.

TIME ELEMENT: 3 Minutes POINTS: 1.0

REFERENCES:

1) Steam Tables

USE OF REFERENCES EXPECTED: YES KNPP SYSTEM NUMBER: 036

OBJECTIVE NUMBER: 1930080001K18

STATIC SIMULATOR CONDITIONS: N/A ASSOCIATED JPM: N/A

QUALIFICATION LEVEL: SRO/RO REV: B
For 002k5.09

Record Number
021

QUESTION

The following Plant conditions exist:

- Unit is at 90% power.
- Pressurizer level control is in the normal at power lineup (position 2-3).
- Pressurizer level transmitter LT-427 (Channel II) output signal fails off-scale low.

Which of the following describes the short-term plant response to this event?

A. Charging pump speed increases, letdown isolates, and PZR heaters are tripped.
B. Charging pump speed is NOT affected, letdown isolates, and PZR heaters are tripped.
C. Charging pump speed increases, letdown is NOT affected, and PZR heaters are tripped.
D. Charging pump speed increases, letdown isolates, and PZR heaters are NOT affected.

Answer	Question Source	Cognitive Level	Question Type	Level
B	FACILITY EXAM BANK -036ADV032	Comprehension	Modified	BOTH

Tier/Group	K/A#	K/A Rating (RO/SRO)	K/A System/Event
T2/G2	011A4.01	3.5/3.2	Pressurizer Level Control

K/A Statement condition
A4-Ability to manually operate and/or monitor in the control room: (CFR 41.7/45.5 to 45.8)

K/A Statement
A4.01-Charging pump and flow controls

Reference	Provided Reference	Objective
XK100-155, XK100-154	NONE	0360000001K23

Objective Statement
EXPLAIN THE RESPONSE TO THE OPERATION OF ALL PRESSURIZER LEVEL CONTROL SYSTEM CONTROLS IN ACCORDANCE WITH LOGIC DIAGRAMS: E2023, E2025, E2039, E2041, XK100-154, K100-547, and XK100-148.

Explanation
In normal the output of LT-427 does not go to the charging pump speed controller so it will not affect the speed of the charging pump. It does go to LD-3, letdown isolation valve, and the pressurizer heater interlock which results in letdown being isolated and the pressurizer heaters deenergized

Comments
Reviewed by dtb 3/16-Validated 3/26

Question #21
036ADV032;

The following conditions exist:

- Unit is at 90% power.
- Pressurizer level control is in the normal at power lineup (position 2-3).
- Pressurizer level transmitter LT-428 (controlling channel) output signal fails off-scale high.

Which of the following describes the long-term plant response to this event with NO operator action taken?

a. Charging pump speed increases to maximum,
letdown isolates, and
PZR level increases to high level reactor trip setpoint.

b. PZR backup heaters energize,
charging pump speed decreases to minimum,
letdown isolates, and
PZR level increases to high level reactor trip setpoint.

c. Letdown isolates,
charging pump speed decreases to minimum,
PZR pressure decreases to low pressure reactor trip setpoint.

d. PZR backup heaters energize,
charging pump speed increases to maximum,
pressure increases until spray valves actuate to control.

ANSWER:

b

TIME ELEMENT: 2 Minutes POINTS: 1.0

REFERENCES:

1) XK100-547, Rev. 1Q

USE OF REFERENCES EXPECTED: NO KNPP SYSTEM NUMBER: 036

OBJECTIVE NUMBER: TASK NUMBER: 0110030101

K/A NUMBER: 011000A2.10 K/A RATING: 3.5/3.5

STATIC SIMULATOR CONDITIONS: N/A ASSOCIATED JPM: N/A

QUALIFICATION LEVEL: RO/SRO REV: ORIG
For 011 a4.01

Record Number
022

QUESTION

Which ONE (1) of the below events has the potential to generate an OT delta T runback?

A. The controlling pressurizer pressure channel fails high.
B. An RCS boron addition which changes temperature.
C. Delta Flux increases from -2 to +6 as a result of a xenon transient.
D. A group of pressurizer backup heaters is energized.

Answer	Question Source	Cognitive Level	Question Type	Level
A	N/A	Comprehension	New	BOTH

Tier/Group	K/A#	K/A Rating (RO/SRO)	K/A System/Event
T2/G2	012A2.05	3.1*/3.2*	Reactor Protection

K/A Statement condition
A2-Ability to (a) predict the impacts of the following malfunctions or operations on the RPS; and (b) based on those predictions, use procedures to correct, control, or mitigate the consequences of those malfunctions or operations: (CFR 41.5/43.5/45.3/45.5)

K/A Statement
A2.05-Faulty or erratic operation of detectors and function generators

Reference	Provided Reference	Objective
TS Section 2.3	NONE	1190110301K01

Objective Statement
DISCUSS THE SAFETY LIMITS AND LIMITING SAFETY SYSTEM SETTINGS, INCLUDING SETPOINTS AND BASES, IN ACCORDANCE WITH T.S. SECTION 2.0.

Explanation
If the controlling channel of pressurizer pressure fails high it will cause actual pressure to drop due to spray and loss of heaters. This causes the OTdeltaT setpoint to drop due to K3 multiplier reducing the setpoint by .000566 for each pound below 2235 psig. Choice b is incorrect because the temperature will drop with the boron addition which raises the OTdeltaT setpoint. Choice c is incorrect because f (delta I) is 0 until delta I goes more positive than +9. Choice d is incorrect because a pressure increase will raise the OT?T setpoint.

Comments
Reviewed by dtb 3/16-Validated 3/26

Record Number
023

QUESTION

The plant is operating at 60% power with N-36 Out of Service. A loss of power occurs on Instrument Bus II (White Channel). Considering only the impact of the IR NIs, what impact this will have on the Reactor?

A. It will NOT trip the Reactor because the affected NI channel is N-36 and it is in bypass.
B. It will trip the Reactor because both control power and instrument power will be lost on the affected channel.
C. It will NOT trip the Reactor regardless of which IR channel is affected because the IR trip was blocked above P-10.
D. It will trip the Reactor because the affected channel is N-35 and it becomes deenergized.

Answer	Question Source	Cognitive Level	Question Type	Level
C	N/A	Memory	New	BOTH

Tier/Group	K/A#	K/A Rating (RO/SRO)	K/A System/Event
T2/G2	012K2.01	3.3/3.7	Reactor Protection

K/A Statement condition
K2-Knowledge of bus power supplies to the following: (CFR 41.7)

K/A Statement
K2.01-RPS channels, components, and interconnections

Reference	Provided Reference	Objective
USAR 7.2	NONE	0870010401A02

Objective Statement
GIVEN A FAILED POWER RANGE INSTRUMENT, PERFORM A REMOVAL FROM SERVICE IN ACCORDANCE WITH A-MI-87.

Explanation
With the loss of the instrument bus, N-42, N-36 and N-32 are affected. P-10 is a 3/4 logic <10% to unblock IR trips so the they remain blocked. Option A is incorrect because the bypass would have been lost to the IR and would have tripped if <10%. Option B is would be correct if <10% power but not true when blocked. Option D is incorrect because N-35 is unaffected by instrument bus II.

Comments
Reviewed by dtb 3/16-Validated 3/26

Record Number
024

QUESTION

The plant is operating at 100% power. All systems are in their normal alignment and in automatic rod control.

One of the RCS Hot Leg RTDs fails high causing the rods to drive in.

When the RO stops rod motion, the CONTROL BANK LOW LIMIT alarm is in.

If NO other action is taken, what happens to the radial and axial flux?

A. The radial flux profile near the top of the core remains the same; the axial flux is forced toward the bottom of the core.
B. The radial flux profile near the top of the core changes; the axial flux is forced toward the bottom of the core.
C. The radial flux profile near the top of the core remains the same; the axial flux is forced toward the top of the core.
D. The radial flux profile near the top of the core changes; the axial flux is forced toward the top of the core.

Answer	Question Source	Cognitive Level	Question Type	Level
B	N/A	Comprehension	New	BOTH

Tier/Group	K/A#	K/A Rating (RO/SRO)	K/A System/Event
T2/G2	014A1.04	3.5/3.8	Rod Position Indication

K/A Statement condition
A1-Ability to predict and/or monitor changes in parameters (to prevent exceeding design limits) associated with operating the RPIS controls, including: (CFR 41.5/45.5)

K/A Statement
A1.04-Axial and radial power distribution

Reference	Provided Reference	Objective
ARP 47042-Q; Kewaunee Core Control Theory Chap. 6	NONE	0490040401A05

Objective Statement
GIVEN DELTA FLUX EXCEEDING THE START-OUTSIDE TARGET BAND, RESPOND IN ACCORDANCE WITH A-CRD-49E.

Explanation
One possible misconception is that since the rods are driven in symmetrically the radial flux does not change. Since the neutron absorbing rods are driven into the core, they will disturb the flux in the areas that they are driven in. Therefore, the radial flux does change near the top of the core. Since the rods are not driven past the RIL, flux will be shifted toward the bottom of the core.

Comments
Reviewed by dtb 3/16-Validated 3/26

Record Number
025

QUESTION

With a Condenser vacuum drawn, the Air Ejectors are isolated from the Condenser. How would Condenser vacuum be effected by this action?

A. Immediate loss of Condenser vacuum because Air Removal is required for steam to condense.
B. Immediate loss of Condenser vacuum due to non-condensable gases entry into the Condenser.
C. Gradual loss of Condenser vacuum as non-condensable gases build up in the Condenser.
D. NO loss of Condenser vacuum as the condensing of the turbine exhaust steam maintains the vacuum.

Answer	Question Source	Cognitive Level	Question Type	Level
C	N/A	Comprehension	New	RO

Tier/Group	K/A#	K/A Rating (RO/SRO)	K/A System/Event
T2/G2	055 2.1.27	2.8/2.9	Condenser Air Removal

K/A Statement condition
2.1-Conduct of Operations

K/A Statement
2.1.27-Knowledge of system purpose and or function.

Reference	Provided Reference	Objective
System Description 09	NONE	0090000001K01

Objective Statement
DISCUSS THE DESIGN CHARACTERISTICS OF THE AIR REMOVAL SYSTEM FOR ANY MODE OF OPERATION PER SYSTEM DESCRIPTION 09 AND USAR SECTION 10.2.

Explanation
The specific volume change from steam condensation is the primary force in maintaining vacuum in the main condenser. Thus the loss of the air ejector would be a gradual process of loosing vacuum as non-condensable gases build up. Option A and B are incorrect because the it is a gradual buildup. Option D is incorrect because over time the vacuum would be lost.

Comments
Reviewed by dtb 3/16-Validated 3/26

Record Number
026

QUESTION

Which ONE (1) of the following lists the power supplies to 118 vac Bus Inverter BRD-109 in the preferred sequence of connection if needed to supply the Inverter?

A. Normal-MCC 46B, then BRC 102, then BRB 127
B. Normal-MCC 62C, then BRD-104, then BRB-105
C. Normal-MCC 62C, then BRD-103, then BRB-127
D. Normal-MCC 52C, then BRA-104, then BRA-105

Answer	Question Source	Cognitive Level	Question Type	Level
C	FACILITY EXAM BANK-038ADV005	Memory	Direct	BOTH

Tier/Group	K/A#	K/A Rating (RO/SRO)	K/A System/Event
T2/G2	063K4.01	2.7/3.1	DC Electrical Distribution

K/A Statement condition
K4-Knowledge of DC electrical system design feature(s) and/or interlock(s) which provide for the following: (CFR 41.7)

K/A Statement
K4.01-Manual/automatic transfers of control

Reference	Provided Reference	Objective
E3626	NONE	0380000001K02

Objective Statement
EXPLAIN THE RESPONSE TO THE OPERATION OF ALL DC AND EMERGENCY AC SUPPLY SYSTEM CONTROLS IN ACCORDANCE WITH LOGIC DIAGRAMS E233 AND E3626.

Explanation
The normal power supply to BRD-109 is MCC-62C, the standby dc power supply is BRD-103 with the alternate as BRB-127. Distracter "a" is the power supply sequence for BRC-109. Distracter "b" is a fictitious sequence and distracter "d" is the sequence for BRA-111.

Comments
Reviewed by dtb 3/16-Validated 3/26

Question #26
038ADV005;

Which ONE (1) of the following lists the power supplies to 118 Vac Instrument
Bus Inverter BRB-111 in the preferred sequence of connection if needed to supply the Inverter?

a. Normal - MCC 62C, then BRB-105, then BRB-104

b. Normal - MCC 52C, then BRA-105, then BRA-104

c. Normal - MCC 62C, then BRB-104, then BRB-105

d. Normal - MCC 52C, then BRA-104, then BRA-105

ANSWER:

c

TIME ELEMENT: 2.0 Minutes POINTS: 1.0

REFERENCES:

1) System Description 38, Rev. A

USE OF REFERENCES EXPECTED: NO KNPP SYSTEM NUMBER: 038

OBJECTIVE NUMBER: SEE TASK NUMBER TASK NUMBER: 0630040101

K/A NUMBER: 063000K4.01 K/A RATING: 3.0/3.0

STATIC SIMULATOR CONDITIONS: N/A ASSOCIATED JPM: N/A

QUALIFICATION LEVEL: RO/SRO REV: A

Record Number
027

QUESTION

The "Instrument Bus Inverter Trouble" alarms in the control room with the SER point indication BRA-111 as the cause. The Equipment Operator reports that on BRA-111 the "Alternate Source Supplying Load" light is lit. What is the condition of BRA-113 Instrument Bus?

A. BRA-113 is without 120VAC power.
B. BRA-113 is now supplied with 120VDC power.
C. Power source is 120VAC via BRA-105.
D. Power source is 125VDC cabinet BRA-104 via BRA-111.

Answer	Question Source	Cognitive Level	Question Type	Level
C	FACILITY EXAM BANK-038ADV010	Comprehension	Modified	BOTH

Tier/Group	K/A#	K/A Rating (RO/SRO)	K/A System/Event
T2/G2	062A3.04	2.7/2.9	AC Electrical Distribution

K/A Statement condition
A3-Ability to monitor automatic operation of the ac distribution system, including: (CFR 41.7, 45.5)

K/A Statement
A3.04 – Operation of inverter (e.g., precharging synchronizing light, static transfer)

Reference	Provided Reference	Objective
System Description 38, E233, 47102-D	NONE	0380000001K02

Objective Statement
EXPLAIN THE RESPONSE TO THE OPERATION OF ALL DC AND EMERGENCY AC SUPPLY SYSTEM CONTROLS IN ACCORDANCE WITH LOGIC DIAGRAMS E233 AND E3626.

Explanation
The BRA-111 inverter normally is the source of power to BRA-113. The inverter is normally powered from MCC-52C and standby DC power from BRA-104. Upon an sufficient electrical perturbation the inverters static transfer switch will transfer to "Alternate" power which is BRA-105 and produce an inverter trouble alarm.

Comments
Reviewed by dtb 3/16-Validated 3/26

Question #27
038ADV010;

BRA-111, 7.5 KVA Inverter 480V/120V Transformer, has just failed. The Inverter AC input BKR is OPEN. What is the condition of BRA-113 Instrument Bus?

a. BRA-113 is without 120V AC power.

b. BRA-113 is now supplied with 120V DC power.

c. Power source is from MCC 52E via BRA-111.

d. Power source is 125V DC cabinet BRA-104 via BRA-111.

ANSWER:

d

TIME ELEMENT: 2.0 Minutes POINTS: 1.0

REFERENCES:

1) E233, REV AP

USE OF REFERENCES EXPECTED: NO KNPP SYSTEM NUMBER: 038

OBJECTIVE NUMBER: 0380000001K02

STATIC SIMULATOR CONDITIONS: N/A

QUALIFICATION LEVEL: NAO REV: A

Record Number
028

QUESTION

The following Plant conditions exist:

- Turbine load 200 MWe
- Plant control systems all in automatic
- Circulating Water (CW) Forebay level 50% and decreasing rapidly due to outsurge caused by seiche in progress
- Turbine back pressure 5.0" Hg Absolute and increasing rapidly.

The correct action(s) that the operators should take is/are ... (choose one)

A. reduce Turbine load to 30% (165 Mwe) power and isolate one pair of Main Condenser Water Boxes in order to reduce CW flow requirements.
B. stop ONE CW pump within 10 minutes in order to regain CW Forebay level.
C. trip the Reactor/Turbine and enter E-0, "Reactor Trip or Safety Injection."
D. ramp power down at a rate NOT to exceed 5% per minute and trip the Reactor at 15% power.

Answer	Question Source	Cognitive Level	Question Type	Level
C	FACILITY EXAM BANK-075000402K01	Comprehension	Direct	BOTH

Tier/Group	K/A#	K/A Rating (RO/SRO)	K/A System/Event
T2/G2	075A2.03	2.5/2.7	Circulating Water

K/A Statement condition
A2-Ability to (a) predict the impacts of the following malfunctions or operations on the circulating water system; and (b) based on those predictions, use procedures to correct, control, or mitigate the consequences of those malfunctions or operations: (CFR 41.5, 43.5,45.3,45.13)

K/A Statement
A2.03-Safety features and relationship between condenser vacuum, turbine trip, and steam dump

Reference	Provided Reference	Objective
System Description 04. E-AR-09, E-CW-04	E-AR-09 figure 1	0040030501A07

Objective Statement
RESPOND TO A LOW CONDENSER VACUUM, GIVEN A LOSS OF CIRCULATING WATER, IN ACCORDANCE WITH E-CW-04.

Explanation
At 5.0" Hg Absolute and Turbine load 200 Mwe, the plant has entered into a "Do Not Operate" region of E-AR-09 figure 1. This region requires the immediate trip of the turbine and thus the reactor. Any Rx trip requires entry into E-0. Options A and D are incorrect because of the ramping of the turbine which can be done in the avoid region of the figure. Option B is incorrect since the forebay level is of lower priority than the turbine and is only effective if trash is blocking the intakes.

Comments
Reviewed by dtb 3/16-Validated 3/26

Question #28

QuestionStem

The plant is on line.

Which ONE of the following describes the plant response when condenser vacuum decreases to 21.5 inches?

Assume no operator actions.

Answer Condenser steam dumps are operable. The turbine is on line.

Distract1 Condenser steam dumps are inoperable. The turbine is tripped.

Distract2 Condenser steam dumps are inoperable. The turbine is on line.

Distract3 Condenser steam dumps are operable. The turbine is tripped.

QuestionComment

CognitiveLevel N **RefMaterial**

ExamDate 08/07/1998

AbbrevLocName	KaNumber	KaSegment1	KaSegment2	KaSegment3	KaSegment4	KaSegment5	KaRevision
Turkey Point 3	..075.A2.03		075	A2	03		

Record Number
029

QUESTION

SA-60/CV 31648, Station Air Crossover Pressure Control Valve, controls air to the Instrument Air System at _____ from the Station Air Header.

A. 110 psi
B. 100 psi
C. 95 psi
D. 90 psi

Answer	Question Source	Cognitive Level	Question Type	Level
A	FACILITY EXAM BANK-001BAS015	Memory	Direct	BOTH

Tier/Group	K/A#	K/A Rating (RO/SRO)	K/A System/Event
T2/G2	079K1.01	3.0/3.1	Station Air

K/A Statement condition
K1-Knowledge of the physical connections and/or cause- effect relationships between the SAS and the following systems: (CFR 41.2 to 41.9/45.7 to 45.8)

K/A Statement
K1.01 – IAS

Reference	Provided Reference	Objective
E2097	NONE	0010000004K06

Objective Statement
DESCRIBE THE SA AND IA SYSTEM'S LOCAL COMPONENT OPERATION USING THE FOLLOWING LOGIC DIAGRAMS: E1603, E2097, AND E2098.

Explanation
SA-60 modulates to maintain 110 psi in the Instrument Air header. All options are incorrect for SA-60 but are other setpoints for various other components in the Station and Instrument Air system.

Comments
Reviewed by dtb 3/16-Validated 3/26

Question #29
001BAS015;

SA-60 CV 31648 Station Air crossover Pres CV modulates to provide air to the Instrument Air System at what pressure?

a. 110 psi

b. 100 psi

c. 95 psi

d. 90 psi

ANSWER:

a

TIME ELEMENT: 2 Minutes POINTS: 1.0

REFERENCES:

1) E2097, Rev. L

USE OF REFERENCES EXPECTED: NO KNPP SYSTEM NUMBER: 001

OBJECTIVE NUMBER: 0010000004K06 TASK NUMBER:

K/A NUMBER: 07800K4.03 K/A RATING: 3.4/3.0

STATIC SIMULATOR CONDITIONS: N/A ASSOCIATED JPM: N/A

QUALIFICATION LEVEL: NAO/RO/SRO REV: A

Record Number
030

QUESTION

A failure of which of the following detectors will result in an IMMEDIATE (i.e. NO time delay) discharge of its associated fire protection medium (i.e. water, halon, CO2)?

A. ONE temperature switch/thermostat in Zone 103, Diesel Generator Room A.
B. TWO ionization (smoke) detectors in Zone 602, the Aux. Bldg. Record Storage Room.
C. ONE temperature rise (thermal pneumatic) detector in Zone 1203, Materials Work Storage.
D. ONE photo-electric detector AND ONE ionization (smoke) detector in Zone 1103, QA/QC Vault.

Answer	Question Source	Cognitive Level	Question Type	Level
C	Previous Exam-12/2000	Memory	Direct	BOTH

Tier/Group	K/A#	K/A Rating (RO/SRO)	K/A System/Event
T2/G2	086K6.04	2.6/2.9	Fire Protection

K/A Statement condition
K6-Knowledge of the effect of a loss or malfunction on the Fire Protection System following will have on the: (CFR 41.7/45.7)

K/A Statement
K6.04 – Fire, smoke, and heat detectors

Reference	Provided Reference	Objective
System Description 08, E1619	NONE	0080000001K02

Objective Statement
DISCUSS THE DESIGN CHARACTERISTICS OF THE FIRE PROTECTION SYSTEM, FOR ANY MODE OF OPERATION, PER SYSTEM DESCRIPTION 08 AND USAR SECTION 7.7-5.

Explanation
The thermal pneumatic sensor in Zone 1203 controls the deluge valve FP-321-2/CV-31659. The failure of this sensor will open the deluge valve resulting in water flow into the area. A)-This will result in actuation of the CO2 discharge system; however, there is a 30-second delay in CO2 discharge to allow for evacuation. B)-This will NOT result in CO2 discharge to the area. To discharge CO2 into this area, the manual pushbutton has to be depressed. D) -This will cause actuation of the Halon system for the area; however, there is a 10-second delay in halon discharge actuation (with immediate warning horn) to allow evacuation of area or abort of discharge.

Comments
Reviewed by dtb 3/16-Validated 3/26

Question

Which of the following will result in automatic actuation with immediate discharge of its associated fire protection medium (i.e., water, halon, carbon dioxide)?

Failure of...

a. ONE temperature switch/thermostat failure in Zone 103 Diesel Generator Room A.

b. TWO ionization (smoke) detector failure in Zone 602 the Aux. Bldg. Record Storage Room.

c. ONE temperature rise detector (thermal pneumatic) failure in Zone 1203 Materials Work Storage.

d. ONE photo-electric detector and ONE ionization (smoke) detector failure in Zone 1103 QA/QC Vault.

Answer C

Exam Level R **Cognitive Level** Memory **Facility:** Kewaunee **ExamDate:** 12/11/00

Record Number: 79 **RO Number:** 64 **SRO Number:**

Tier: Plant Systems **RO Group:** 2 **SRO Group:** 2

086 Fire Protection System (FPS)

K6. Knowledge of the effect of a loss or malfunction of the following will have on the Fire Protection System:

K6.04 Fire, smoke, and heat detectors 2.6 2.9

Explanation of Answer

The thermal pneumatic sensor in Zone 1203 controls the deluge valve FP-321-2/CV-31659. The failure of this sensor will open the deluge valve resulting in water flow into the area. A) - This will result in actuation of the CO2 discharge system; however, there is a 30-second delay in CO2 discharge to allow for evacuation. B) - This will NOT result in CO2 discharge to the area. To discharge CO2 into this area, the manual pushbutton has to be depressed. D) -This will cause actuation of the Halon system for the area; however, there is a 10-second delay in halon discharge actuation (with immediate warning horn) to allow evacuation of area or abort of discharge.

Reference Title	Facility Reference Number	Section	Page	Revision	L. O.
System Description - Fire Protection (FP)	Number 8	3.6, 3.9.2, 3.9.4, 3.13	8-16,21,25,31	A	
Integrated Logic - Fire Protection	E-1619			W	

Material Required for Examination

Facility Objective(s)

0080000001K02 - DISCUSS THE DESIGN CHARACTERISTICS OF THE FIRE PROTECTION SYSTEM, FOR ANY MODE OF OPERATION, PER SYSTEM DESCRIPTION 08 AND USAR SECTION 7.7-5.

0080000001K04 - EXPLAIN THE RESPONSE TO THE OPERATION OF ALL FIRE PROTECTION SYSTEM CONTROLS IN ACCORDANCE WITH LOGIC DIAGRAM E1619.

Question Source: New **Question Modification Method:**

Question Source Comments:

Record Number
031

QUESTION

Maintenance opens a hose station valve to flush the Fire Header.

The Fire Protection System pressure dropped to 107 psig and repressurizes to 170 psig. What is the status of the fire protection system at this time?

(Assume that the fire protection system was in a normal lineup prior to opening the hose station valve.)

	Jockey Pump	A Fire Pump	B Fire Pump
A.	Running	Stopped	Running
B.	Running	Running	Stopped
C.	Stopped	Running	Stopped
D.	Stopped	Stopped	Running

Answer	Question Source	Cognitive Level	Question Type	Level
C	FACILITY EXAM BANK-008BAS015	Memory	Modified	BOTH

Tier/Group	K/A#	K/A Rating (RO/SRO)	K/A System/Event
T2/G2	086A1.01	2.9/3.3	Fire Protection

K/A Statement condition
A1-Ability to predict and/or monitor changes in parameters (to prevent exceeding design limits) associated with Fire Protection System operating the controls including: (CFR 41.5/45.5)

K/A Statement
A1.01-Fire header pressure

Reference	Provided Reference	Objective
E1619	NONE	0080000004K06

Objective Statement
DESCRIBE THE FP SYSTEM'S LOCAL COMPONENT OPERATION USING THE FOLLOWING LOGIC DIAGRAMS: E1619, E1620, E2009, E2766, E3027 AND E3346.

Explanation
Fire Pump A starts on the opening of a hose station valve and 110 psig header pressure. Fire Pump B starts on 102 psig header pressure. Fire jockey pump cycles between 128-143 psig header pressure. All other options incorrect based on the header pressures.

Comments
Reviewed by dtb 3/16-Validated 3/26

Question #31
008BAS015;

The Fire Protection System pressure dropped to 105 psig and repressurizes to 140 psig. What is the status of the fire protection system at this time.

Assume that the fire protection system was in a normal lineup prior to opening the hose station valve.

	Jockey Pump	A Fire Pump	B Fire Pump
a.	Running	Stopped	Running
b.	Running	Running	Stopped
c.	Stopped	Running	Stopped
d.	Stopped	Stopped	Running

ANSWER:

b

TIME ELEMENT: 2 Minutes POINTS: 1.0

REFERENCES:

1) E1619, Rev. V

USE OF REFERENCES EXPECTED: NO KNPP SYSTEM NUMBER: 008

OBJECTIVE NUMBER: 0080000004K06 TASK NUMBER: 0860050101/

K/A NUMBER: 086000K4.02 K/A RATING: 3.2/3.0

STATIC SIMULATOR CONDITIONS: N/A ASSOCIATED JPM: N/A

QUALIFICATION LEVEL: NAO/RO/SRO REV: C

Record Number
032

QUESTION

A plant cooldown on RHR is in progress. If RCS Loop A Inlet Isolation Valve, RHR-1A, failed shut and could NOT be reopened, then how would Low Temperature Overpressure Protection be provided?

A. Establish normal letdown with at least one orifice in service to utilize LD-5, Letdown Orifice Relief Valve.
B. Tag open both RCS Loop B Inlet Isolation Valves (RHR-1B/2B) and their breakers.
C. Provide a dedicated operator at the PRZR PORV control switches to maintain RCS pressure less than 425 psig.
D. Maintain RCS temperatures stable utilizing the steam dumps until repairs could be made to RHR-1A in order to place RHR back in service

Answer	Question Source	Cognitive Level	Question Type	Level
B	FACILITY EXAM BANK-0334ADV010	Memory	Direct	RO

Tier/Group	K/A#	K/A Rating (RO/SRO)	K/A System/Event
T2/G3	005K2.03	2.7*/2.8*	Residual Heat Removal

K/A Statement condition
K2-Knowledge of bus power supplies to the following: (CFR 41.7)

K/A Statement
K2.03-RCS pressure boundary motor-operated valves

Reference	Provided Reference	Objective
N-RHR-34	NONE	0340040101A01

Objective Statement
INITIATE RCS FLOW THROUGH THE RHR SYSTEM GIVEN AN RHR SYSTEM STARTUP IN ACCORDANCE WITH N-RHR-34.

Explanation
N-RHR-34 requires the breakers to be tagged open and power removed for this condition. All other options are incorrect as they would not ensure LTOP is met.

Comments
Reviewed by dtb 3/16-Validated 3/26

Question #32

QuestionStem

Which method is used to ensure availability of the RHR safety valve when it is being utilized to meet "Overpressure Protection Systems" operability requirements?

Answer The power is removed to the RHR suction valves under Shift Supervisor clearance permit.

Distract1 The RHR suction valve control key-switches are controlled with caution tags identifying the operability concern.

Distract2 The air operated RHR suction valve from Loop 2 Hot Leg has a stem blocking device installed in the open position.

Distract3 The RHR suction valve control key-switches are locked with the keys held by the Shift Supervisor.

QuestionComment

CognitiveLevel N **RefMaterial**

ExamDate 01/08/1996

AbbrevLocName	KaNumber	KaSegment1	KaSegment2	KaSegment3	KaSegment4	KaSegment5	KaRevision
Cook 1	..005000.K2.0		005000	K2	03		3

Record Number
033

QUESTION

The following Plant conditions exist:

- Plant cooldown to COLD SHUTDOWN is in progress.
- RHR aligned for cooldown.
- RCS pressure is 400 psig.
- RCS Wide Range temperature, Hot Leg, is 350 degrees Fahrenheit.
- Flow Controller RHR-101 is in AUTOMATIC 10% open.
- Local RHR Heat Exchanger outlet temperature is 300 degrees Fahrenheit.

The RHR return header flow transmitter (FT-626) fails low. What is the Plant response to this event?

A. RHR Heat Exchanger Bypass Valve (RHR-101) position will change to full close to maintain RHR desired system flow rate and RCS cooldown rate will increase.
B. RHR Heat Exchanger Bypass Valve (RHR-101) will position to full open to maintain RHR desired system flow rate and RCS cooldown rate will decrease.
C. RHR Heat Exchanger Flow Control Valves (RHR-8A/8B) will automatically close to prevent exceeding RCS cooldown rate of 100 degrees Fahrenheit per hour.
D. RHR Return Header Isolation Valve (RHR-11) will automatically open to maintain RHR Pump discharge pressure and flow constant to the Reactor Vessel.

Answer	Question Source	Cognitive Level	Question Type	Level
B	FACILITY EXAM BANK-011STAT000	Comprehension	Direct	BOTH

Tier/Group	K/A#	K/A Rating (RO/SRO)	K/A System/Event
T2/G3	005A1.02	3.3/3.4	Residual Heat Removal

K/A Statement condition
A1-Ability to predict and/or monitor changes in parameters (to prevent exceeding design limits) associated with operating the RHRS controls including: (CFR 41.5/45.5)

K/A Statement
A1.02-RHR flow rate

Reference	Provided Reference	Objective
E2036, XK100-18	NONE	0340000001K04

Objective Statement
EXPLAIN THE RESPONSE TO THE OPERATION OF ALL RHR SYSTEM CONTROLS IN ACCORDANCE WITH LOGIC DIAGRAMS/SCHEMATICS E2036

Explanation
RHR-101 is controlled by FT-626 to maintain the set flow rate while the RHR-8A and B are adjusted to maintain cooldown rate. The low failure would cause RHR-101 to open to try to maintain the set flow thus the RHR Heat Exchangers are bypassed and cooling is reduced. Option A is incorrect because this failure would cause RHR-101 to open. Option C is incorrect because RHR-8A&B do not have flow control function. Option D is incorrect because RHR-11 has no flow control function.

Comments
Reviewed by dtb 3/16-Validated 3/26

Record Number
034

QUESTION

The following Plant conditions exist:

- Plant is at 100% power.
- ICS Pump A is OUT-OF-SERVICE for maintenance.
- Plant Electricians request Bus 1-61 be removed from service for maintenance.

The Electricians' request is denied. What is the basis for the denial?

A. All vital 480V AC Buses shall be energized when the Plant is critical.
B. All vital 4160V AC Buses shall be energized when the Plant is critical.
C. It is an error since Bus 1-61 is the power supply for ICS Pump A and would NOT violate Technical Specifications
D. De-energizing Bus 1-61 will result in both Containment Spray Trains being INOPERABLE and violate Technical Specifications.

Answer	Question Source	Cognitive Level	Question Type	Level
D	FACILITY EXAM BANK-026020005G01	Comprehension	Direct	RO

Tier/Group	K/A#	K/A Rating (RO/SRO)	K/A System/Event
T2/G2	026K2.01	3.4*/3.6	Containment Spray

K/A Statement condition
K2-Knowledge of bus power supplies to the following: (CFR 41.7)

K/A Statement
K2.01-Containment spray pumps

Reference	Provided Reference	Objective
E240, T.S. 3.3.c.1.A.1	NONE	0230000004K07

Objective Statement
LIST THE POWER SUPPLIES FOR THE FOLLOWING COMPONENTS PER N-ICS-23-CL: 1) ICS PUMPS A & B.

Explanation
Per Tech. Spec., one ICS Pump may be out of service for 72 hours as long as the opposite train ICS pump is in service. Bus 1-61 is the power supply for ICS pump B, thus removing Bus 1-61 from service would result in both ICS Pumps being out of service. Option A and B are incorrect because Tech. Spec. allows the removal from service of buses for short duration at power. Option C is incorrect because Bus 1-51 the power supply for ICS Pump A.

Comments
Reviewed by dtb 3/16-Validated 3/26

026020005G01;

The following Plant conditions exist:

- Plant is at 100% power.
- 1A ICS Pump is OUT-OF-SERVICE for maintenance at 0800 today.
- Plant Electricians request Bus 1-61 be removed from service for maintenance.

The Electricians' request is denied. What is the basis for the denial?

a. All vital 480V AC Buses shall be energized when the Plant is critical.

b. All vital 4160V AC Buses shall be energized when the Plant is critical.

c. De-energizing Bus 1-61 will result in both Containment Fan Coil Trains being INOPERABLE and violate Technical Specifications.

d. De-energizing Bus 1-61 will result in both Containment Spray Trains being INOPERABLE and violate Technical Specifications.

ANSWER:

d.

TIME ELEMENT: 3 Minutes POINTS: 1.00

REFERENCES:

1) Dwg E-240, Rev. AQ
2) T.S. 3.3.c.1.A.1, Amendment 116

USE OF REFERENCES EXPECTED: YES KNPP SYSTEM NUMBER: 23

OBJECTIVE NUMBER: See K/A number TASK NUMBER: 0230010101

K/A NUMBER: 026020G5 K/A RATING: 3.3/4.0

STATIC SIMULATOR CONDITIONS: N/A ASSOCIATED JPM: N/A

QUALIFICATION LEVEL: RO/SRO REV: F

Record Number
035

QUESTION

The following plant conditions exist:

- Shield Building Annulus To Containment DP Switch (16427) fails in the >0.3 PSID direction.
- Containment pressure is 1 psig.

What effect would these conditions have on the Containment Vent and Purge system?

VB-10A, Power Operated Cntmt Vacuum Breaker A, would OPEN and the operator would ...

A. manually close VB-10A.
B. manually close VB-10A only after Containment Pressure has equalized with the Annulus
C. NOT be able to CLOSE VB-10A and Containment Pressure would equalize with the Annulus
D. NOT be able to CLOSE VB-10A and Containment Pressure would NOT equalize with the Annulus

Answer	Question Source	Cognitive Level	Question Type	Level
D	N/A	Comprehension	New	BOTH

Tier/Group	K/A#	K/A Rating (RO/SRO)	K/A System/Event
T2/G2	029K3.01	2.9/3.1	Containment Purge

K/A Statement condition
K3-Knowledge of the effect that a loss or malfunction of the Containment Purge System will have on the following: (CFR 41.7/45.6)

K/A Statement
K3.01-Containment parameters

Reference	Provided Reference	Objective
E1609, M602	None	0180000001K04

Objective Statement
EXPLAIN THE RESPONSE TO THE OPERATION OF ALL REACTOR BUILDING VENTILATION SYSTEM CONTROLS IN ACCORDANCE WITH LOGIC DIAGRAMS/SCHEMATICS E1608, E1609, E3104, E3174 AND E3310.

Explanation
The failure of DP Switch 16427 to >0.3 psid will provide a standing open signal to VB-10A. VB-11A is a check damper and will prevent the Containment from equalizing with the Annulus. Option A and B are incorrect because the operator will be unable to remove the open signal by repositioning the switch. Option C is incorrect because VB-11A will prevent the equalizing of the pressure.

Comments
Reviewed by dtb 3/16-Validated 3/26

Record Number
036

QUESTION

The DG A is running following a recovery for a loss of all AC power. The NCO reports current DG A load is 3100 KW.

What is the MINIMUM amount of load that would have to be shed from the DG A to be below the 7 day/year limit for operation?

A. 500 KW
B. 240 KW
C. 150 KW
D. 50 KW

Answer	Question Source	Cognitive Level	Question Type	Level
C	INPO Exam Bank-Braidwood exam 10/6/97	Memory	Direct	BOTH

Tier/Group	K/A#	K/A Rating (RO/SRO)	K/A System/Event
T2/G2	062A1.01	3.4/3.8	AC Electrical Distribution

K/A Statement condition
A1-Ability to predict and/or monitor changes in parameters (to prevent exceeding design limits) associated with operating the ac distribution system controls including: (CFR 41.5/45.5)

K/A Statement
A1.01 – Significance of D/G load limits

Reference	Provided Reference	Objective
N-DGM-10A	None	0100020101A01

Objective Statement
MAINTAIN DIESEL GENERATOR KW AND KVARs DURING STEADY STATE OPERATIONS IN ACCORDANCE WITH N-DGM-10A(B).

Explanation
The 7 day/year limit is 2950 KW. Reducing the load 150 KW would bring it into the limit. All other options are incorrect. Option A is based on the continuous rating. Option B is based on the 2000 hours/year rating. Option D is based on a older limit no longer used.

Comments
Reviewed by dtb 3/16-Validated 3/26

Question #36

QuestionStem

The 1A DG is running following a recovery for a loss of all AC power. The NSO reports current 1A DG load is 6200 KW.

What is the MINIMUM amount of load that would have to be shed from the 1A DG to be below the 2 hour limit for operation?

Answer 160 KW

Distract1 285 KW

Distract2 520 KW

Distract3 750 KW

QuestionComment

CognitiveLevel N

RefMaterial

ExamDate 10/06/1997

AbbrevLocName	KaNumber	KaSegment1	KaSegment2	KaSegment3	KaSegment4	KaSegment5	KaRevision
Braidwood 1	..062000.A1.0		062000	A1	01		1

Record Number
037

QUESTION

The plant is at 100% power performing a 2" vent of Containment using Train B when a High Alarm is received on R-21. How is the 2" vent of Containment affected?

A. LOCA-100B/CV-31725, Post LOCA Hydrogen to Recombiner B and LOCA-201B/CV-31727, Post LOCA Hydrogen Recombiner to Cntmt go CLOSED.
B. Only LOCA-100B/CV-31725, Post LOCA Hydrogen to Recombiner B goes CLOSED.
C. Only LOCA-201B/CV-31727, Post LOCA Hydrogen Recombiner to Cntmt goes CLOSED
D. 2" vent of Containment continues until MANUAL Action is taken.

Answer	Question Source	Cognitive Level	Question Type	Level
A	FACILITY EXAM BANK-045ADV020	Comprehension	Modified	BOTH

Tier/Group	K/A#	K/A Rating (RO/SRO)	K/A System/Event
T2/G2	073K3.01	3.6/4.2	Process Radiation Monitoring

K/A Statement condition
K3-Knowledge of the effect that a loss or malfunction of the PRM system will have on the following: (CFR 41.7/45.6)

K/A Statement
K3.01 – Radioactive effluent releases

Reference	Provided Reference	Objective
A-RM-45, N-RBV-18B	NONE	0450190401A01

Objective Statement
GIVEN AN R-21 RADIATION INDICATION HIGH CONDITION, RESPOND IN ACCORDANCE WITH A-RM-45.

Explanation
On an High Alarm on R-21, LOCA-100B and LOCA 201B are both closed. Options B and C are incorrect because both close. Option D is incorrect as automatic action occur but would be correct for Train A.

Comments
Reviewed by dtb 3/16-Validated 3/26

045ADV020;

The plant is at 100% power when a High Alarm is received on R-21. What are the operators' immediate actions?

ANSWER:

(0.25 for each * item)

Verify the following:

1. The following CLOSE:

* - TAV-12/CD-34033, Cntmt Purge/Vent Supply
* - RBV-1/CV-31125, Cntmt Purge/Vent Supply A
* - RBV-4/CV-31123, Cntmt Purge/Vent Exhaust A
* - RBV-5/CD-34006, Cntmt Purge/Vent Exhaust

* - LOCA-100B/CV-31725, Post LOCA Hydrogen to Recombiner B
* - LOCA-201B/CV-31727, Post LOCA Hydrogen Recombiner to Cntmt

TIME ELEMENT: 2 Minutes POINTS: 1.5

REFERENCES:

1) A-RM-45, Rev. Z

USE OF REFERENCES EXPECTED: NO KNPP SYSTEM NUMBER: 045

OBJECTIVE NUMBER: SEE TASK NUMBER TASK NUMBER: 0730050401

K/A NUMBER: 073000SG14 K/A RATING: 3.5/3.5

STATIC SIMULATOR CONDITIONS: N/A ASSOCIATED JPM: N/A

QUALIFICATION LEVEL: RO/SRO REV: ORIG

Record Number
038

QUESTION

Which of the following is a complete list of the radiation monitors that detect and on High alarm function to mitigate a radioactive release from the Aux building by stopping the Aux Building Supply and Aux Building Exhaust fans and starts a SV (Special Vent) exhaust fan?

A. R-13 & R-14 Aux Bldg. Vent Monitors, R-35 Aux Bldg. Vent Low range and R-36 Aux Bldg. Vent High Range.
B. R-13 & R-14 Aux Bldg. Vent Monitors, R-35 Aux Bldg. Vent Low range, R-36 Aux Bldg. Vent High Range and R-22 RHR Pit Exhaust Air Monitoring subsystem.
C. R-13 & R-14 Aux Bldg. Vent Monitors and R-22 RHR Pit Exhaust Air Monitoring subsystem.
D. R-13 & R-14 Aux Bldg. Vent Monitors.

Answer	Question Source	Cognitive Level	Question Type	Level
D	N/A	Comprehension	New	BOTH

Tier/Group	K/A#	K/A Rating (RO/SRO)	K/A System/Event
T2/G2	073K4.01	4.0/4.3	Process Radiation Monitoring

K/A Statement condition
K4-Knowledge of PRM system design feature(s) and/or interlock(s) which provide for the following: (CFR 41.7)

K/A Statement
K4.01 – Release termination when radiation exceeds setpoint

Reference	Provided Reference	Objective
A-RM-45 System Description 45	None	0450000001K03

Objective Statement
DISCUSS THE DESIGN CHARACTERISTICS OF THE RADIATION MONITORING SYSTEM FOR ANY MODE OF OPERATION PER SYSTEM DESCRIPTION 45 AND USAR SECTIONS 1.3.3, 1.6.6, 1.8, 6.5, AND 11.2.3.

Explanation
Option D is correct because R-13 and R-14 are the only radiation monitors interlocked with Aux Building ventilation. Option A is incorrect because R-35 and R-36 are alarm only and have no automatic actions which respond to a high detected radiation level. Option B is incorrect because R-22 RHR Pit Exhaust Air Monitor is alarm only and has no automatic actions which respond to a high detected radiation level.

Comments
Reviewed by dtb 3/16-Validated 3/26

Record Number
039

QUESTION

The following Plant conditions exist:

- The DC Supply and Distribution System is configured for normal operation and is operating properly.
- Annunciator BRB-102 FEEDER BKR UNDERVOLTAGE (47102-B) alarms.

Assuming the system performed as designed, which ONE (1) of the following describes the actions the local operator is directed to perform to allow future faulted circuits on BRB-102 FEEDER BKR UNDERVOLTAGE (47102-B) to annunciate?

A. Identifies the tripped circuit by the red circuit status light being ON while the toggle switch is in OFF position and places the toggle switch to the ON position.
B. Identifies the tripped circuit by the red circuit status light being OFF with the toggle switch in the OFF position and places the toggle switch to the ON position.
C. Identifies the tripped circuit breaker by breaker position and by the red circuit status light being OFF with the toggle switch in ON position and places the toggle switch to the OFF position.
D. Identifies the tripped circuit breaker by breaker position and by the red circuit status light being OFF with the toggle switch in ON position places the toggle switch first to OFF position and back to ON.

Answer	Question Source	Cognitive Level	Question Type	Level
C	N/A	Memory	New	BOTH

Tier/Group	K/A#	K/A Rating (RO/SRO)	K/A System/Event
T2/G2	063A3.01	2.7/3.0*	DC Electrical Distribution

K/A Statement condition
A3-Ability to monitor automatic operation of the DC electrical system, including: (CFR 41.7/45.5)

K/A Statement
A3.01 – Meters, annunciators, dials, recorders, and indicating lights

Reference	Provided Reference	Objective
A-EDC-38, N-EDC-38, System Description 38	NONE	0380000001K06

Objective Statement
DISCUSS THE DESIGN CHARACTERISTICS OF THE DC AND EMERGENCY AC SUPPLY SYSTEM FOR ANY MODE OF OPERATION PER SYSTEM DESCRIPTION 38 AND USAR SECTIONS 1.8 AND 8.0.

Explanation
Option C is the correct answer because with a tripped breaker the red light would be off and placing the toggle switch to off allow reset of the control room alarm. Option A is incorrect because switch position of the toggle would cause it to be off already and the breaker position has not been verified. Option B is incorrect because breaker position has not been verified and the light would be off. Option D is incorrect because turning the toggle back on would put BRB-102 FEEDER BKR UNDERVOLTAGE (47102-B) annunciator back into an alarm condition.

Comments
Reviewed by dtb 3/16-Validated 3/26

Record Number
040

QUESTION

A Steam Generator Tube Rupture (SGTR) has occurred in conjunction with a loss of offsite power. Performing which of the following actions in E-3, "Steam Generator Tube Rupture", could cause an increase in radiation level and humidity in the Containment.

A. Isolating the ruptured Steam Generator.
B. Cooling down the Reactor Coolant System.
C. Depressurizing the Reactor Coolant System.
D. Establishing Charging flow.

Answer	Question Source	Cognitive Level	Question Type	Level
C	N/A	Analysis	New	RO

Tier/Group	K/A#	K/A Rating (RO/SRO)	K/A System/Event
T2/G3	007K3.01	3.3/3.6	Pressurizer Relief/Quench Tank

K/A Statement condition
K3-Knowledge of the effect that a loss or malfunction of the PRTS will have on the following: (CFR 41.7/45.6)

K/A Statement
K3.01 – Containment

Reference	Provided Reference	Objective
E-3 Background Document Step 20, Caution 1	NONE	E030010501K04

Objective Statement
GIVEN A STEAM GENERATOR TUBE RUPTURE, EXPLAIN THE BASIS FOR ACTIONS TAKEN, PER E-3 BACKGROUND DOCUMENT.

Explanation
IPEOP E-3 step 20 is depressurizing the RCS using a pressurizer PORV. This is necessitated by the loss of offsite power stipulated in the stem. Because the PORV is being used there is a caution before the step alerting the operator to the possibility of rupturing the PRT rupture disk. If that happens Containment parameters will be affected. The IPEOP background document explains this. Isolating the ruptured S/G will not affect the RCS. Cooling down the RCS will lower RCS pressure somewhat making it less likely to affect the Containment. Establishing charging will help to recover pressurizer level but will not lead to a PORV lifting.

Comments
Reviewed by dtb 3/16-Validated 3/26

Record Number
041

QUESTION

Given the following indications:

- N-31 is reading 25 CPS
- N-32 is reading 30 CPS
- Audible count is selected to N-32

Which of the following conditions would result in an AUTOMATIC Containment Evacuation Alarm during core alterations?

A. The reading on N-31 increases to 100 CPS.
B. N-32 fails low.
C. Source Range High Flux at Shutdown alarm is blocked on N-31.
D. The Remote Speaker is turned off.

Answer	Question Source	Cognitive Level	Question Type	Level
A	INPO exam bank- DC Cook 2/7/1996	Memory	Modified	RO

Tier/Group	K/A#	K/A Rating (RO/SRO)	K/A System/Event
T2/G3	034A4.02	3.5/3.9	Fuel Handling Equipment

K/A Statement condition
A4-Ability to manually operate and/or monitor in the control room: (CFR 41.7/45.5 to 45.8)

K/A Statement
A4.02-Neutron levels

Reference	Provided Reference	Objective
E-2051-2, SP 48-287A-1	NONE	0480000001K05

Objective Statement
EXPLAIN THE RESPONSE TO THE OPERATION OF ALL NUCLEAR INSTRUMENTATION SYSTEM CONTROLS IN ACCORDANCE WITH THE FOLLOWING LOGIC DIAGRAMS/SCHEMATICS: E2051-1and E2051-2.

Explanation
Explanation: The setpoint for the Hi flux at Shutdown alarm, and hence the Containment evacuation alarm, is ½ decade above current reading. This is done by calibrating the alarm at a steady value and multiplying its value by 3.16. Therefore the setpoint for N-31 is 79 CPS.N-32 failing low will have the opposite effect of that which would cause an alarm. Blocking the SR Hi Flux at Shutdown would prevent the alarm from coming in regardless of the reading. The remote speaker power switch is completely independent of the Containment evacuation alarm.

Comments
Reviewed by dtb 3/16-Validated 3/26

Question #41

QuestionStem

Which of the following would result in an AUTOMATIC Containment Evacuation Alarm during core alterations?

Answer Source range counts on one channel have increased one decade.

Distract1 All source range indication is lost.

Distract2 Audible source range indication is lost in containment.

Distract3 Source range detector volts low alarm on the channel selected for containment audio.

QuestionComment

CognitiveLevel N **RefMaterial**

ExamDate 02/07/1996

AbbrevLocName	KaNumber	KaSegment1	KaSegment2	KaSegment3	KaSegment4	KaSegment5	KaRevision
Cook 1	..034000.A4.0		034000	A4	02		2

Record Number
042

QUESTION

In which ONE (1) of the following sets of conditions can a Condenser Cooldown Dump Valve be opened after the Main Steam Dump Interlock Selector Switches have been placed in BYPASS INTLK and returned to the Mid-position?

A. Condenser pressure is 4.5" HgA
Tave is 530°F
1 Circ Water Pump is running
B. Condenser pressure is 13.5" HgA
Tave is 550°F
NO Circ Water Pumps are running
C. Condenser pressure is 22.5" HgA
Tave is 550°F
1 Circ Water Pump is running
D. Condenser pressure is 8.0" HgA
Tave is 550°F
NO Circ Water Pumps are running

Answer	Question Source	Cognitive Level	Question Type	Level
A	FACILITY EXAM BANK-06CADV003	Memory	Modified	BOTH

Tier/Group	K/A#	K/A Rating (RO/SRO)	K/A System/Event
T2/G3	041K1.06	2.6/2.9	Steam Dump/Turbine Bypass Control

K/A Statement condition
K1-Knowledge of the Physical connections and/or cause-effect relationships between the SDS and the following systems: (CFR 41.2 to 41.9/45.7 to 45.8)

K/A Statement
K1.06 – Condenser saturation pressure relief setting on valves

Reference	Provided Reference	Objective
System Description 06	NONE	0060000001K14

Objective Statement
DISCUSS THE PURPOSES/FUNCTIONS OF THE STEAM DUMP SYSTEM AND ITS COMPONENTS FOR ANY MODE OF OPERATION, PER SYSTEM DESCRIPTION 06 AND USAR SECTIONS 7.3.2, 7.3.3, 10.2.2, AND 10.3.2.

Explanation
The steam dump interlock requires RCS Tave to be > 540°F, condenser pressure to be > 6.5 HgA and at least 1 Circ Water Pump to be running. The Tave interlock can be bypassed for the cooldown valves only. The condenser pressure interlock can be bypassed but only up to 20" HgA. The Circ Water Pump interlock cannot be bypassed.

Comments
Reviewed by dtb 3/16-Validated 3/26

Question #42
06CADV003;

In which ONE of the following sets of conditions can a Condenser (non-cooldown) Dump Valve be opened?

a. Condenser vacuum is 16.6" Hg
   TÜaveÛ is 550øF

b. Condenser vacuum is 16.6" Hg
   TÜaveÛ is 550øF
   ÞNoÝ Circ Water Pumps running

c. Condenser vacuum is 24.6" Hg
   TÜaveÛ is 539øF
   SD Interlock Selector Switch in INTERLOCK BYPASS ACTIVATED

d. Condenser vacuum is 16.6" Hg
   TÜaveÛ is 550øF
   SD Interlock Selector Switch in INTERLOCK BYPASS ACTIVATED

ANSWER:

d

TIME ELEMENT: 2 Minutes POINTS: 1.0

REFERENCES:

1) System Description, Chap. 6, Rev. B

USE OF REFERENCES EXPECTED: No KNPP SYSTEM NUMBER: 06C

OBJECTIVE NUMBER: N/A TASK NUMBER: 0410010101

K/A NUMBER: 041020A4.08 K/A RATING: 3.8/3.5

STATIC SIMULATOR CONDITIONS: N/A ASSOCIATED JPM: N/A

QUALIFICATION LEVEL: RO/SRO REV: B
For 041k1.06

Record Number
043

QUESTION

The normal Main steam temperature and pressure at NO Load Tave is:

A. 512°F 750 psig
B. 547°F 1005 psig
C. 552°F 1050 psig
D. 564°F 1174 psig

Answer	Question Source	Cognitive Level	Question Type	Level
B	FACILITY EXAM BANK-006BAS009	Memory	Modified	RO

Tier/Group	K/A#	K/A Rating (RO/SRO)	K/A System/Event
T2/G3	041K5.01	2.9/3.2	Steam Dump/Turbine Bypass Control

K/A Statement condition
K5-Knowledge of the operational implications of the following concepts as the apply to the SDS: (CFR 41.5/45.7)

K/A Statement
K5.01-Relationship of no-load Tave. saturation pressure relief setting on valves

Reference	Provided Reference	Objective
Steam Table, System Description 06	Steam Table	0060000001K14

Objective Statement
DISCUSS THE PURPOSES/FUNCTIONS OF THE STEAM DUMP SYSTEM AND ITS COMPONENTS FOR ANY MODE OF OPERATION, PER SYSTEM DESCRIPTION 06 AND USAR SECTIONS 7.3.2, 7.3.3, 10.2.2, AND 10.3.2.

Explanation
No Load Tave is 547°. Which corresponds to 1005 psig (1020 psia). All other options are incorrect. Option A is 100% temperature and pressure. Option C is the S/G pop open setting. Option D is the S/G safety setting.

Comments
Reviewed by dtb 3/16-Validated 3/26

Question #43
006BAS009;

The normal Main steam temperature and pressure at 100% power is:

a. 512øF 750 psig

b. 547øF 1005 psig

c. 592øF 1050 psig

d. 668øF 2235 psig

ANSWER:

a.

TIME ELEMENT: 2 Minutes POINTS: 1.0

REFERENCES:

1) SYS DESC CHAP 06, Rev. 1

USE OF REFERENCES EXPECTED: No KNPP SYSTEM NUMBER: 06A

OBJECTIVE NUMBER: 0060000004K03 TASK NUMBER: 06A1020404

K/A NUMBER: 039000A1.06 K/A RATING: 3.6/3.8

STATIC SIMULATOR CONDITIONS: N/A ASSOCIATED JPM: N/A

QUALIFICATION LEVEL: NAO/RO/SRO REV: C

Modify for 041k5.01 – At what RCS temperature would …

Record Number
044

QUESTION

The following plant conditions exist:

- The plant is at 30% power during a post refueling startup.
- SP 54-063, "Turbine Trip Mechanism Test", is in progress.

With the Overspeed Mechanism Test lever at the Governor End Pedestal being held in the "TEST" position, which ONE (1) of the following would still result in a Turbine trip?

A. MSIV A closing
B. Mechanical Overspeed.
C. Low bearing oil pressure.
D. Low vacuum.

Answer	Question Source	Cognitive Level	Question Type	Level
A	INPO Exam Bank-Salem 1/22/96	Comprehension	Modified	BOTH

Tier/Group	K/A#	K/A Rating (RO/SRO)	K/A System/Event
T2/G3	045K4.13	2.6*/2.8*	Main Turbine Generator

K/A Statement condition
K4-Knowledge of MT/G system design feature(s) and/or interlock(s) which provide for the following: (CFR 41.7)

K/A Statement
K4.13-Overspeed protection

Reference	Provided Reference	Objective
E2059, XK101-24	NONE	0540000001K05

Objective Statement
EXPLAIN THE RESPONSE TO THE OPERATION OF ALL MAIN TURBINE ELECTRO-HYDRAULIC CONTROL SYSTEM CONTROLS IN ACCORDANCE WITH SYSTEM DESCRIPTION 54, TURBINE CONTROL PANEL BOOK, E2057, E2059, XK100-156, AND XK101-24.

Explanation
The Overspeed Mechanism Test lever blocks all the Auto Stop Oil turbine trips. ET-20, Turbine EH Fluid Emergency Trip Solenoid Valve is not blocked by Overspeed Mechanism Test lever and is opened by Reactor Trip, HI-HI S/G Level, MSIV Closure, and 45 psi Auto Stop Oil pressure. Option B, C, and D are Auto Stop Oil turbine trips and are blocked. Option B uses the solenoid trip on the Auto Stop Oil trip Block. MSIV closure is also an Auto Stop Oil turbine trip.

Comments
Reviewed by dtb 3/16-Validated 3/26

Question #44

QuestionStem

A refueling outage startup is being conducted at Unit 2, and the plant is in Mode 1 at 30% power. Procedure S2.OP-PT.TRB-0001,
"Turbine Auto Trip Mechanism Operational Test," is in progress.

With the "TEST-NORMAL" lever at the main turbine front standard being held in the "TO TEST" position, which one of the
would still result in a main turbine trip?

Answer Auxiliary power transformer differential current.
Distract1 Mechanical overspeed.
Distract2 Low bearing oil pressure.
Distract3 Low vacuum.
QuestionComment
CognitiveLevel **RefMaterial**
N
ExamDate 01/22/1996

AbbrevLocName	KaNumber	KaSegment1	KaSegment2	KaSegment3	KaSegment4	KaSegment5	KaRevision
Salem 2	..045000.K4.1	045000	K4	13			3

Record Number
045

QUESTION

The following Plant conditions exist:

- Annunciator 47051P, SW HEADER PRESSURE LOW, SER 125, SW Header B
- LESS THAN 72 psig, actuates.
- Operator identifies 1A Auxiliary Bldg Service Water Header
- pressure is at 90 psig and 1B header at 55 psig.
- SW-4B, SW Header B to Turbine Bldg Hdr, is open.

What Operator action should be taken first?

A. Close SW-10B, Aux. Bldg. Header B Isolation.
B. Shift Turbine Building header to Train A.
C. Trip the Reactor and Turbine.
D. Initiate SW isolation for Turbine Building.

Answer	Question Source	Cognitive Level	Question Type	Level
B	FACILITY EXAM BANK-076000202A01	Memory	Direct	RO

Tier/Group	K/A#	K/A Rating (RO/SRO)	K/A System/Event
T2/G3	076A2.01	3.5*/3.7*	Service Water

K/A Statement condition
A2-Ability to (a) predict the impacts of the following malfunctions or operations on the SWS; and (b) based on those predictions, use procedures to correct, control, or mitigate the consequences of those malfunctions or operations: (CFR 41.5/43.5/45/3/45/13)

K/A Statement
A2.01-Loss of SWS

Reference	Provided Reference	Objective
E-SW-02	NONE	0020010501K01

Objective Statement
LIST THE IMMEDIATE OPERATOR ACTIONS, GIVEN A SERVICE WATER LEAK, IN ACCORDANCE WITH E-SW-02.

Explanation
The immediate action for this condition is to shift the turbine building to the other header. All options are incorrect based on the immediate actions of E-SW-02. Option A is for a leak in the Aux. Bldg. and is a subsequent action. Option C and D are immediate actions to be performed after the shifting of the header.

Comments
Reviewed by dtb 3/16-Validated 3/26

Question #45
076000202A01;

The following Plant conditions exist:

- Annunciator 47051P, SW HEADER PRESSURE LOW, SER 125, SW Header B LESS THAN 72 psig, actuates.
- Operator identifies 1A Auxiliary Bldg Service Water Header pressure is at 90 psig and 1B header at 55 psig.
- SW-4B, SW Header B to Turbine Bldg Hdr, is open.

What Operator action should be taken first?

a. Close SW-10B, Aux. Bldg. Header A Isolation.

b. Shift Turbine Building header to Train A.

c. Trip the Reactor and Turbine.

d. Initiate SW isolation for Turbine Building.

ANSWER:

b.

TIME ELEMENT: 1 Minute POINTS: 1.00

REFERENCES:

1) OP E-SW-02, Rev. M

USE OF REFERENCES EXPECTED: YES KNPP SYSTEM NUMBER: 02

QUALIFICATION LEVEL: RO/SRO REV: C

0020010501 K01 LIST THE IMMEDIATE OPERATOR ACTIONS, GIVEN A SERVICE WATER LEAK, IN ACCORDANCE WITH E-SW-02.

For 076a2.01

Record Number
046

QUESTION

The following Plant conditions exist:

- The plant is in REFUELING
- Fuel shuffle is complete
- Preparations are completed to initiate draining of the Reactor Cavity

What is the responsibility of the NCO concerning the Source Range instrumentation?

The operator must verify...

A. TWO channels are OPERABLE and each is visually monitored during the draining operation.
B. TWO channels are OPERABLE and the audio count can be monitored in Containment.
C. at least ONE channel is OPERABLE and the audio count can be monitored both in the Control Room and in Containment.
D. at least ONE channel is OPERABLE and it is visually monitored during the draining operation.

Answer	Question Source	Cognitive Level	Question Type	Level
D	Previous Exam-12/2000	Memory	Direct	RO

Tier/Group	K/A#	K/A Rating (RO/SRO)	K/A System/Event
T3	2.2.30	3.5/3.3	GENERIC

K/A Statement condition
2.2-Equipment Control

K/A Statement
2.2.30-Knowledge of RO duties in the control room during fuel handling such as alarms fuel handling area, communication with fuel storage facility, systems operated from the control room in support of fueling operations, and supporting instrumentation.

Reference	Provided Reference	Objective
N-FH-53E, Technical Specifications 3.8.3	None	0530000001K05

Objective Statement
LOCATE ALL SYSTEM CONTROLS AND INDICATIONS WHILE OPERATING IN SUPPORT OF THE REFUELING FROM THE CONTROL ROOM.

Explanation
During Reactor Cavity draining, Source Range Count Rate shall be monitored to ensure RCS dilution is not occurring due to cavity washdown. A) & B)-The requirement for TWO SR channels to be operable per TS 3.8 is only applicable whenever core geometry is being changed. This is NOT the situation during draining operation. C)-The requirement for audible indication is also only applicable whenever core geometry is being changed.

Comments
Reviewed by dtb 3/16-Validated 3/26

Question #46

Question

Given the following conditions:

- The plant is in REFUELING
- Fuel shuffle is complete
- Preparations are completed to initiate draining of the Reactor Cavity

What is the responsibility of the NCO concerning the Source Range instrumentation?

The operator must verify...

a. TWO channels are OPERABLE and each is visually monitored during the draining operation.

b. TWO channels are OPERABLE and the audio count can be monitored in Containment.

c. at least ONE channel is OPERABLE and the audio count can be monitored both in the Control Room and in Containment.

d. at least ONE channel is OPERABLE and it is visually monitored during the draining operation.

Answer d

Exam Level B **Cognitive Level** Memory **Facility:** Kewaunee

Record Number: 12 **RO Number:** 5 **SRO Number:** 9

Tier: Generic Knowledge and Abilities **RO Group:** 1 **SRO Group:** 1

GENERIC

2.2 Equipment Control

2.2.30 Knowledge of RO duties in the control room during fuel handling such as alarms from fuel handling area, communication with fuel storage facility, systems operated from the control room in support of fueling operations, and supporting instrumentation. 3.5 3.3

Explanation of Answer

During Reactor Cavity draining, Source Range Count Rate shall be monitored to ensure RCS dilution is not occurring due to cavity washdown. A) & B) - The requirement for TWO SR channels to be operable per TS 3.8 is only applicable whenever core geometry is being changed. This is NOT the situation during draining operation. D) - The requirement for audible indication is also only applicable whenever core geometry is being changed.

Reference Title	Facility Reference Number	Section	Page	Revision L. O.
Reactor Cavity Draining with Fuel or Upper Internals Installed	N-FH-53E	2.6 & 3.8	1-2	H
KNPP Technical Specifications		3.8.3	TS 3.8-1	Amend 132

Material Required for Examination

Facility Objective(s)

0530000001K05 - LOCATE ALL SYSTEM CONTROLS AND INDICATIONS WHILE OPERATING IN SUPPORT OF THE REFUELING FROM THE CONTROL ROOM.

Question Source: New **Question Modification Method:**

Question Source Comments:

From previous exam.

Record Number
047

QUESTION

The following Plant conditions exist:

- A LOCA outside Containment has occurred 15 minutes ago at 0130
- The Shift Manager has declared a SITE EMERGENCY
- The faulted line was manually isolated locally, however the NAO performing the task was
- injured and CANNOT leave the area on his own
- Initial dose estimates for the area are 90 R/hr primarily due to gamma radiation

If the EPA guideline (Emergency) limits are NOT exceeded voluntarily, what is the maximum stay time allowed to rescue the NAO?

A. 3-4 minutes
B. 6-7 minutes
C. 6-17 minutes
D. Rescue would NOT be allowed.

Answer	Question Source	Cognitive Level	Question Type	Level
C	Previous Exam-12/2000	Analysis	Modified	RO

Tier/Group	K/A#	K/A Rating (RO/SRO)	K/A System/Event
T3	2.3.4	2.5/3.1	GENERIC

K/A Statement condition
2.3-Radiation Control

K/A Statement
2.3.4-Knowledge of radiation exposure limits and contamination control, including permissible levels in excess of those authorized

Reference	Provided Reference	Objective
EP-AD-11	NONE	GET OBJECTIVE

Objective Statement
N/A

Explanation
The EPA Limit Non-voluntary Limit is <25 Rem. In a 90 R/hr field, 25 Rem is received in 16.666 minutes. Option A is incorrect because it is based on the controlled emergency limit. . Option B is incorrect because it is based on the valued property emergency limit. . Option D is incorrect because a 90 R/hr dose rate would allow a rescue attempt.

Comments
Reviewed by dtb 3/16-Validated 3/26

Question #47

Question

Given the following conditions:

- A LOCA outside containment has occurred 15 minutes ago at 0130
- The Shift Supervisor has declared a SITE EMERGENCY
- The faulted line was manually isolated locally, however the NAO performing the task was injured and CANNOT leave the area on his own
- Initial dose estimates for the area are 90 R/hr primarily due to gamma radiation
- The recovery time using one individual is estimated to take 10 minutes with a maximum time of 15 minutes.

Which of the following describes the conditions concerning a rescue attempt?

a. NO attempted rescue may be made since the exposure will exceed the allowed dose guidelines.

b. A qualified individual selected by the Shift Supervisor may attempt the rescue with the approval of the Shift Supervisor and concurrence of the on-shift HP.

c. Only a volunteer, after being made aware of all risks, can attempt the rescue when authorized by the Shift Supervisor and with the concurrence of the Radiological Protection Director.

d. A qualified individual selected by the Shift Supervisor may attempt the rescue once the authorization of the Vice President - Nuclear is obtained and concurrence given by the Radiological Protection Director.

Answer b

Exam Level S **Cognitive Level** Comprehension **Facility:**Kewaunee **ExamDate:** 12/11/00

Record Number: 16 **RO Number:** **SRO Number:** 11

Tier: Generic Knowledge and Abilities **RO Group:** 1 **SRO Group:** 1

GENERIC

2.3 Radiation Control

2.3.4 Knowledge of radiation exposure limits and contamination control, including permissible levels in excess of those authorized. 2.5 3.1

Explanation of Answer

The exposure estimated is 15 REM with a maximum expected of 22.5 REM. This is below the "recommended" level of 25 REM exposure for life saving efforts. The authorization of the Shift Supervisor acting as ED is required, and the on-shift HP may provide concurrence in the absence of the RPD (which is likely at 0130). A) Dose projected is above 10CFR20 limits but within the "emergency" guidelines. C) - The approvals are appropriate (if RPD is on-site in this role) however, the requirement for a volunteer (only) is not applicable since the exposure is to be within the 25 REM value. The guidelines state, "Exposures above these levels [TEDE 25 REM; All other Organs TODE 250 REM] to emergency workers will be on a voluntary basis only to persons fully aware of the risks involved. Only a volunteer, after being made aware of all risks, can attempt the rescue when authorized by the Shift Supervisor and with the concurrence of the Radiological Protection Director. D) - The VP -Nuclear is not listed as ED-qualified so it is NOT allowed nor required for him to provide authorization.

Reference Title	Facility Reference Number	Section	Page	Revision	L. O.
Emergency Radiation Controls	EP-AD-11	4.1.4, 4.2 & 4.3	2-3	P	

Material Required for Examination

Facility Objective(s)

Question Source: New **Question Modification Method:**

Question Source Comments:

From previous exam

Record Number
048

QUESTION

The following Plant conditions exist:

- Discharge is in progress from Waste Condensate Tanks.
- R-18, Waste Discharge Liquid radiation monitor, fails off-scale high.

Which of the following actions is NOT required prior to reinitiating the release?

Technically qualified members of the Facility Staff must...

A. complete TWO independent verifications of the discharge line valving.
B. perform TWO independent verifications of the release rate calculations.
C. analyze TWO independent samples from the tanks for gamma and tritium.
D. establish TWO independent locations for taking grab samples during the release.

Answer	Question Source	Cognitive Level	Question Type	Level
D	Previous Exam-12/2000	Memory	Direct	BOTH

Tier/Group	K/A#	K/A Rating (RO/SRO)	K/A System/Event
T3	2.3.11	2.7/3.2	GENERIC

K/A Statement condition
2.3-Radiation Control

K/A Statement
2.3.11-Ability to control radiation releases.

Reference	Provided Reference	Objective
SP 32A-136, Offsite Dose Calculation Manual 3-2, 3-13, 3.1 & Table 3.1	NONE	32A0110104A01

Objective Statement
WHEN DIRECTED, DISCHARGE THE WASTE CONDENSATE TANKS TO THE AUXILIARY BUILDING STANDPIPE IN ACCORDANCE WITH N-LWP-32A-3.

Explanation
ACTION 1 of ODCM Radiological Specifications 3/4.1 for the failure of R-18 requires 1) At least two independent samples are analyzed per Surveillance Requirement 4.3.1.1 and 2) At least two technically qualified members of the Facility Staff verify the release rate calculations and discharge line valving. The requirement for grab samples is addressed in this Specification for R-16 and R-20 in the Service Water Effluent line. The grab samples are collected and analyzed at least once every 12 hours. Two independent sampling points are NOT required. A), B) & C)-These are requirements for failure of R-18.

Comments
Reviewed by dtb 3/16-Validated 3/26**Record Number**

Question #48

Question

Given the following conditions:

- Discharge is in progress from Waste Condensate Tanks.
- R-18, Waste Discharge Liquid radiation monitor, fails off-scale high.

Which of the following actions is NOT required prior to reinitiating the release?

Technically qualified members of the Facility Staff must...

a. complete TWO independent verifications of the discharge line valving.

b. perform TWO independent verifications of the release rate calculations.

c. analyze TWO independent samples from the tanks for gamma and tritium.

d. establish TWO independent locations for taking grab samples during the release.

Answer d

Exam Level B **Cognitive Level** Memory **Facility:** Kewaunee

Record Number: 17 **RO Number:** 9 **SRO Number:** 12

Tier: Generic Knowledge and Abilities **RO Group:** 1 **SRO Group:** 1

GENERIC

2.3 Radiation Control

2.3.11 Ability to control radiation releases. 2.7 3.2

Explanation of Answer

ACTION 1 of ODCM Radiological Specifications 3/4.1 for the failure of R-18 requires 1) At least two independent samples are analyzed per Surveillance Requirement 4.3.1.1 and 2) At least two technically qualified members of the Facility Staff verify the release rate calculations and discharge line valving. The requirement for grab samples is address in this Specification for R-16 and R-20 in the Service Water Effluent line. The grab samples are collected and analyzed at least once every 12 hours. Two independent sampling points are NOT required. A), B) & D) - These are requirements for failure of R-18.

Reference Title	Facility Reference Number	Section	Page	Revision L.
Offsite Dose Calculation Manual		Specification 3.1 & Table 3.1	3-2, 3-13	8
Radiological Liquid Discharges (Batch Mode)	SP 32A-136	3.4	2	U

O.

Material Required for Examination

Facility Objective(s)

32A0110104A01 - WHEN DIRECTED, DISCHARGE THE WASTE CONDENSATE TANKS TO THE AUXILIARY BUILDING STANDPIPE IN ACCORDANCE WITH N-LWP-32A-3.

Question Source: Facility Exam Bank **Question Modification Method:** Editorially Modified

Question Source Comments: Q 32AADV00. Moved common elements from selections to stem. Changed correct answer to be consistent with other selections. Changed position of correct answer.

From previous exam

049

QUESTION

Which of the following is ONE (1) of the requirements for maintaining the Reactor and Control Room Log?

A. The Shift Manager shall initial all late entries.
B. At the end of each shift the Control Room Supervisor shall review and sign the Reactor and Control Room Log.
C. The initial entry shall include the time in core life, i.e. MWD/MTU.
D. All entries shall be in non-smearable black ink.

Answer	Question Source	Cognitive Level	Question Type	Level
D	N/A	Memory	New	BOTH

Tier/Group	K/A#	K/A Rating (RO/SRO)	K/A System/Event
T3	2.1.18	2.9/3.0	GENERIC

K/A Statement condition
2.1-Conduct of Operations

K/A Statement
2.1.18-Ability to make accurate, clear and concise logs, records, status boards, and reports.

Reference	Provided Reference	Objective
NAD 3.6	NONE	1190040301A01

Objective Statement
MAINTAIN THE REACTOR AND CONTROL ROOM LOG IN ACCORDANCE WITH NAD 3.6.

Explanation
Choice A-For late entries the only requirement is that the RO note the actual time. Choice B-The CRS is not required to review the log, the ROs are required to sign the log. Choice C-The time in core life is not stipulated as part of the initial entry. Choice D-This is requirement 5.1 of NAD 3.6.

Comments
Reviewed by dtb 3/16-Validated 3/26

Record Number
050

QUESTION

While performing N-HD-11, "Heater and Moisture Separator Drain and Bleed Steam System", to start a second Heater Drain Pump, the procedure directs the operator to "VERIFY that the Heater Drain Pump Demand is at MINIMUM" before the pump is started.

What action should the NCO take if the Demand is reading 20% when he is performing the step?

A. Leave the speed as found and start the pump.
B. Adjust the speed to minimum and then start the pump.
C. Do a temporary change to the procedure to add a step to reduce the speed to minimum and then start the pump.
D. Contact the Control Room Supervisor and the Superintendent – Plant Operations and if they concur, adjust the speed to minimum and then start the pump.

Answer	Question Source	Cognitive Level	Question Type	Level
B	INPO Exam Bank-North Anna 1/96	Memory	New	RO

Tier/Group	K/A#	K/A Rating (RO/SRO)	K/A System/Event
T3	2.1.20	4.3/4.2	GENERIC

K/A Statement condition
2.1-Conduct of Operations

K/A Statement
2.1.20-Ability to execute procedure steps.

Reference	Provided Reference	Objective
GNP 3.2.1	NONE	1190020301K03

Objective Statement
EXPLAIN THE REQUIREMENTS OF CONTROL ROOM OPERATIONS IN ACCORDANCE WITH NAD 3.17.

Explanation
VERIFY means to ensure that the specified action or reading is done. If it isn't, then the operator is to make it so.

Comments
Reviewed by dtb 3/16-Validated 3/26

Record Number
051

QUESTION

Which ONE (1) of the following circumstances would require an Independent Verification?

A. A CVCS valve needs to be throttled 25% open.
B. An RCS valve within a locked high radiation area must opened.
C. An AFW valve needs to be shut when the TD AFW pump is returned to service.
D. The Containment isolation valves are being returned to their normal position after the ILRT during a refueling outage.

Answer	Question Source	Cognitive Level	Question Type	Level
C	INPO Exam Bank-North Anna 1/96	Memory	Modified	RO

Tier/Group	K/A#	K/A Rating (RO/SRO)	K/A System/Event
T3	2.1.29	3.4/3.3	GENERIC

K/A Statement condition
2.1-Conduct of Operations

K/A Statement
2.1.29-Knowledge of how to conduct and verify valve lineups

Reference	Provided Reference	Objective
NAD 3.9	NONE	1190040304A01

Objective Statement
PERFORM AN INDEPENDENT VERIFICATION TO ESTABLISH A COMPONENT'S POSITION, IN ACCORDANCE WITH NAD 3.9.

Explanation
Choice A-Per section 5.2.2 this should not be done independently. Choice B-Per section 5.2.1 this should be done by alternate means. Choice C-Per section 5.2 and Appendix NAD 3.9 this needs to be done. Choice D-Per section 5.2.3 this is not required, the Containment Integrity CL will take care of this.

Comments
Reviewed by dtb 3/16-Validated 3/26

Question #51

QuestionStem

Given the following plant conditions:

- An independent verification is required

- The independent verification is expected to take 45 minutes

Which ONE (1) of the following circumstances describes the conditions necessary to waive the Independent Verification requirements of PLP-030, Independent Verification?

Answer Radiation levels in the area are 20 mrem/hr, Shift Superintendent approval

Distract1 Radiation levels in the area are 10 mrem/hr, Shift Superintendent approval.

Distract2 Radiation levels in the area are 10 mrem/hr, Senior Control Operator approval.

Distract3 Radiation levels in the area are 20 mrem, Senior Control Operator approval

QuestionComment

CognitiveLevel	RefMaterial
N	

ExamDate 02/07/1996

AbbrevLocName	KaNumber	KaSegment1	KaSegment2	KaSegment3	KaSegment4	KaSegment5	KaRevision
Robinson 2	..194000.K1.0		194000	K1	01		1

Same as 2.1.29

Record Number
052

QUESTION

The following Plant conditions exist:

- Reactor power is 1320 MWt.
- RCS pressure is in the normal operating band.

Which ONE (1) of the following RCS average temperatures would FIRST result in exceeding a safety limit?

A. 594°F
B. 616°F
C. 627°F
D. 636°F

Answer	Question Source	Cognitive Level	Question Type	Level
C	INPO Exam Bank-Prairie Island 6/97	Analysis	Modified	BOTH

Tier/Group	K/A#	K/A Rating (RO/SRO)	K/A System/Event
T3	2.2.25	2.5/3.7	GENERIC

K/A Statement condition
2.2-Equipment Control

K/A Statement
2.2.25-Knowledge of bases in technical specifications for limiting conditions for operations and safety limits.

Reference	Provided Reference	Objective
Tech. Spec. Figure 2.1-1	Tech. Spec. Figure 2.1-1	1190110301K01

Objective Statement
DISCUSS THE SAFETY LIMITS AND LIMITING SAFETY SYSTEM SETTINGS, INCLUDING SETPOINTS AND BASES, IN ACCORDANCE WITH T.S. SECTION 2.0.

Explanation
At 80% power (rated thermal power is 1650 MW) and Normal operating pressure of 2235 psig, exceeding the 2200 psia line along the 80% line by approximately 9° (627°) would exceed the safety limit. Option A is incorrect because it is based on the 1800 psia line. Option B is incorrect because it is based on the 2000 psia line. Option D is incorrect because it is based on the 2400 psia line.

Comments
Reviewed by dtb 3/16-Validated 3/26

Question #52

QuestionStem

Given the following Unit 2 plant conditions:

o Reactor power is 1215 MWt.
o RCS pressure is in the normal operating band.

Which ONE of the following RCS average temperatures would FIRST result in exceeding a safety limit?

Answer 616 degrees F

Distract1 574 degrees F

Distract2 594 degrees F

Distract3 621 degrees F

QuestionComment

CognitiveLevel **RefMaterial**

ExamDate 06/16/1997

AbbrevLocName	KaNumber	KaSegment1	KaSegment2	KaSegment3	KaSegment4	KaSegment5	KaRevision
Prairie Island 1	..002000.G0.0		002000	G0	05		5

For 2.2.25 – same k/a from original K/A cat.

Record Number
053

QUESTION

Which of the following conditions would require the suspension of all core alterations per Technical Specifications during refueling operations?

A. The primary coolant system boron had an inadvertent dilution to 1900 ppm.
B. One of the personnel airlock doors is broken and CANNOT be closed.
C. The Shift Manager leaving the Control Room for the Morning Meeting.
D. A review of the RO log indicates that RHR Pumps have been secured for 30 minutes.

Answer	Question Source	Cognitive Level	Question Type	Level
A	INPO Exam Bank-Point Beach 8/99	Memory	Direct	BOTH

Tier/Group	K/A#	K/A Rating (RO/SRO)	K/A System/Event
T3	2.2.27	2.6/3.5	GENERIC

K/A Statement condition
2.2-Equipment Control

K/A Statement
2.2.27-Knowledge of the refueling process

Reference	Provided Reference	Objective
Tech. Spec. 3.8	NONE	1190110301A01

Objective Statement
RECOGNIZE PLANT CONDITIONS THAT ARE ADDRESSED IN TECHNICAL SPECIFICATIONS AND LOCATE THE APPLICABLE INFORMATION.

Explanation
Tech. Spec. requires a boron concentration of 2200 ppm for refueling operations and if any refueling Tech. Spec. cannot be met that refueling operations stop. Option B is incorrect as only one of the 2 doors for the airlock needs to be closed in 30 min. Option C is incorrect because the Shift Manager is not required to move fuel. Option D is incorrect because the only one RHR pump is required to be operable.

Comments
Reviewed by dtb 3/16-Validated 3/26

Question #53

QuestionStem

Which of the following conditions would require the suspension of all core alterations per Technical Specifications during refueling operations?

Answer The primary coolant system boron had an inadvertent dilution to 1900 ppm.

Distract1 A review of the Unit RO log indicates that the system has been secured for 30 minutes.

Distract2 The temporary third door airlock automatic door closer was found broken with two personnel doors closed.

Distract3 The containment purge and vent isolation system was determined to be inoperable during a routine (once per seven days) surveillance test with the purge and vent penetrations closed.

QuestionComment

CognitiveLevel	RefMaterial
N	

ExamDate 08/02/1999

AbbrevLocName	KaNumber	KaSegment1	KaSegment2	KaSegment3	KaSegment4	KaSegment5	KaRevision
Point Beach 1	..034000.G2.1		034000	G2	1		

Record Number
054

QUESTION

The following Plant conditions exist:

- Plant is in Cold Shutdown with RCS temperature at 140 degrees F
- RHR is in service
- Refueling preparations are in progress
- Containment integrity is NOT required
- Containment purge is in progress using the 36" RBV valves.
- R-11 is out of service for filter drive motor replacement
- R-12 has just failed low

Which ONE (1) of the following describes the plant/operator response to this failure?

A. NO effect, remove R-12 from service, and continue purge.
B. NO effect, remove R-12 from service, and stop purge until R-12 returned to service.
C. Containment Vent Isolation occurs stopping the purge, Shift R-21 to vent stack, and restart purge.
D. Containment Vent Isolation occurs stopping the purge, purge can be restarted when R-11 or R-12 is returned to service.

Answer	Question Source	Cognitive Level	Question Type	Level
A	INPO Exam Bank- Robinson 02/07/1996	Comprehension	Direct	BOTH

Tier/Group	K/A#	K/A Rating (RO/SRO)	K/A System/Event
T3	2.3.9	2.5/3.4	GENERIC

K/A Statement condition
2.3-Radiation Control

K/A Statement
2.3.9-Knowledge of the process for performing a containment purge.

Reference	Provided Reference	Objective
ODCM 2.1, A-RM-45, N-RBV-18B	NONE	0180020101A01

Objective Statement
WHEN DIRECTED, PERFORM A CONTAINMENT VENT USING THE 36" VALVES IN ACCORDANCE WITH N-RBV-18B.

Explanation
A low failure of R-12 will not provide any protective function so Cntmt Isolation will not occur. The normal procedure for an instrument failure is to remove it from service. Per the ODCM, only R-12 or R-21 is required for a Cntmt Purge. R-21 is normally aligned to the vent stack, thus it is not necessary to stop the purge. Option B is incorrect because R-12 is not required for the purge. Option C and D are incorrect because Containment Vent Isolation would not occur.

Comments
Reviewed by dtb 3/16-Validated 3/26

Question #54

QuestionStem

Given the following plant conditions:

- Plant is in Cold Shutdown with RCS temperature at 140 degrees F

- RHR is in service

- Refueling preparations are in progress

- Containment integrity is NOT required

- Containment vent and purge is in progress

- R-11 is out of service for filter drive motor replacement

- R-12 has just failed low

Which ONE (1) of the following describes the plant/operator response to this failure?

Answer No effect, remove R-12 from service IAW OWP, and continue purge

Distract1 V12-10 & 11, "CV PRESS RELIEF" closes, purge fan stops, Evacuate CV, Notify E&RC

Distract2 V12-10 & 11, "CV PRESS RELIEF" closes, purge fan stops, Contact I&C to restore R-11 or R-12

Distract3 No effect, remove R-12 from service IAW OWP, Evacuate CV, Secure purge

QuestionComment

CognitiveLevel	RefMaterial						
	N						
ExamDate	02/07/1996						
AbbrevLocName	**KaNumber**	**KaSegment1**	**KaSegment2**	**KaSegment3**	**KaSegment4**	**KaSegment5**	**KaRevision**
Robinson 2	..022000.K4.03			022000	K4	03	

Record Number
055

QUESTION

Which of the following would violate the principle of ALARA?

A. Identify the hot spots in the area beforehand.
B. Do a dry run at the job site.
C. Identify areas where portable shielding should be installed.
D. Flush a pipe in the job area.

Answer	Question Source	Cognitive Level	Question Type	Level
B	N/A	Memory	New	RO

Tier/Group	K/A#	K/A Rating (RO/SRO)	K/A System/Event
T3	2.3.10	2.9/3.3	GENERIC

K/A Statement condition
2.3-Radiation Control

K/A Statement
2.3.10-Ability to perform procedures to reduce excessive levels of radiation and guard against personnel exposure.

Reference	Provided Reference	Objective
HP-4.01	NONE	GET Objective

Objective Statement
ALARA

Explanation
Choice A-This is on the pre-job ALARA planning checklist. Choice B-The dry run should be done away from the job site if possible. Choice C-This is on the pre-job ALARA planning checklist. Choice D-This is on the pre-job ALARA planning checklist.

Comments
Reviewed by dtb 3/16-Validated 3/26

Record Number
056

QUESTION

The following Plant conditions exist:

- A small fire occurs in the control room
- The fire is quickly brought under control
- The plant is stable
- The main control room is habitable
- Fire damage is limited to the Moveable In-core Detector System

Which ONE (1) of the following procedures will be the plant CONTROLLING PROCEDURE?

A. Fire Plan Procedures
B. E-FP-08, Emergency Operating Procedure Fire
C. E-06, Fire in Alternate Fire Zone
D. E-07, Fire in Dedicated Fire Zone

Answer	Question Source	Cognitive Level	Question Type	Level
B	INPO exam bank- Surry 8/4/97	Memory	Direct	RO

Tier/Group	K/A#	K/A Rating (RO/SRO)	K/A System/Event
T3	2.4.27	3.0/3.5	GENERIC

K/A Statement condition
2.4-Emergency Procedures /Plan

K/A Statement
2.4.27-Knowledge of fire in the plant procedure.

Reference	Provided Reference	Objective
E-FP-08	NONE	0080010501A01

Objective Statement
GIVEN A FIRE IN A PROTECTED AREA/CONTROLLED AREA, RESPOND IN ACCORDANCE WITH E-FP-08.

Explanation
Choice a-This is used for fire planning, not fire fighting. Choice b-As long as the operators are able to monitor and control the key parameters they should continue to use this procedure. The stem says that they are able to do so. Choice c-The stem would preclude this answer because this procedure would have been used if the fire had affected the ability to monitor key safe shutdown parameters. Choice d-The stem would preclude this answer because this procedure would have been used if the fire had affected the ability to monitor or control key dedicated system components.

Comments
Reviewed by dtb 3/16-Validated 3/26

Question #56

QuestionStem

Given the following plant conditions:

- A small fire occurs in the control room
- The fire is quickly brought under control
- Both units are stable
- The main control room is habitable
- Fire damage is limited to the PAM Panel on Unit 1

Which ONE of the following procedures will be the plant CONTROLLING PROCEDURE?

Answer O-AP-48.00, FIRE PROTECTION - OPERATIONS RESPONSE.

Distract1 0-FCA-1.00, LIMITING MCR FIRE.

Distract2 VPAP-2802, NOTIFICATIONS AND REPORTS.

Distract3 O-AP-20.00, MAIN CONTROL ROOM INACCESSIBILITY.

QuestionComment

CognitiveLevel **RefMaterial**

N

ExamDate 08/04/1997

AbbrevLocName	KaNumber	KaSegment1	KaSegment2	KaSegment3	KaSegment4	KaSegment5	KaRevision
Surry 1	..000067.G0.1		000067	G0	11		
	1						

For 2.4.27

Tuesday, January 30, 2001

Record Number
057

QUESTION

How would the NCO determine that annunciator power was lost due to a problem with the power supply?

A. Check the operating status of the Plant Computer.
B. The Annunciators fail to light when TEST pushbutton is depressed.
C. Receive report that 125V DC Bus voltage is 115 volts.
D. LOSS OF ANNUNCIATOR POWER annunciator is in alarm.

Answer	Question Source	Cognitive Level	Question Type	Level
B	San Onofre 10/28 exam	Memory	Modified	BOTH

Tier/Group	K/A#	K/A Rating (RO/SRO)	K/A System/Event
T3	2.4.32	3.3/3.5	GENERIC

K/A Statement condition
2.4-Emergency Procedures /Plan

K/A Statement
2.4.32-Knowledge of operator response to loss of all annunciators.

Reference	Provided Reference	Objective
A-SER-52B	NONE	0520010401A01

Objective Statement
GIVEN AN ERRONEOUS ACTIVATION OR LOSS OF CONTROL ROOM TRAIN A ANNUNCIATORS, RESPOND IN ACCORDANCE WITH A-SER-52B.

Explanation
The symptoms in A-SER-52B for loss of annunciators is the lights not lighting when testing. None of the other Options are included in these symptoms.

Comments
Reviewed by dtb 3/16-Validated 3/26

Question #57

Question Loss of Annunciators

How would the CO determine that annunciator power was lost due to a problem with the battery charger and batteries?

a. Check the operating status of the Plant Computer.

b. The Annunciator TEST pushbutton lamp fails to light when TEST is depressed.

c. Receive report that D5 125V DC Bus voltage is 115 volts.

d. UA0050C LOSS OF ANNUNCIATOR POWER annunciator is in alarm.

Answer d **Exam Level** B **Cognitive Level** Comprehension **Facility:** San Onofre 2 & 3
Tier: Generic Knowledge and Abilities **RO Group:** 1 **SRO Group:** 1

2.4 Emergency Plan
2.4.32 Knowledge of operator response to loss of all annunciators. 3.3 3.5

Explanation of Answer

Reference Title	Facility Reference Number	Section	Page	Revisio	L. O.
Loss of Control Room Annunciators	SO23-13-22	1.1.	2	1	
Loss of Control Room Annunciators	2AO722	6.1.3	2	2	1.2

Material Required for Examination

Question Source: New **Question Modification Method:**

Question Source Comments:

Comment Type Comment

Record Number
058

QUESTION

Which ONE (1) of the following is indication that the Reactor Coolant Pump interlock with its Oil Lift Pump is satisfied?

A. The Oil Lift Pump breaker is CLOSED providing the RED Oil Lift Pump light.
B. Oil Lift pressure is greater than 600 psig providing the RED Oil Lift Pump light.
C. The Oil Lift Pump has been timed ON for 2 minutes providing the RED Oil Lift Pump light.
D. The Oil Lift Pump has been timed ON for 2 minutes AND Oil Lift pressure is 600 psig providing the RED Oil Lift Pump light.

Answer	Question Source	Cognitive Level	Question Type	Level
B	Facility exam bank-36AADV004	Memory	Modified	RO

Tier/Group	K/A#	K/A Rating (RO/SRO)	K/A System/Event
T2/G1	003A3.05	2.7*/2.6	Reactor Coolant Pump

K/A Statement condition
A3-Ability to monitor automatic operation of the RCPS, including: (CFR 41.7/45.5)

K/A Statement
A3.05-RCP lube oil and bearing lift pumps

Reference	Provided Reference	Objective
E2037	NONE	0360000001K07

Objective Statement
EXPLAIN THE RESPONSE TO THE OPERATION OF ALL REACTOR COOLANT PUMP SYSTEM CONTROLS IN ACCORDANCE WITH LOGIC DIAGRAM/SCHEMATIC E2037 AND XK100-147.

Explanation
Option B is correct because the pressure setting for the RXCP start permissive is 550 psig oil pressure and the light comes on at 600 psig. Option A is incorrect because the oil lift permissive is based on pressure not breaker position. Option C is incorrect because the oil lift permissive is based on pressure not time, time is only a procedure requirement and there is no timer circuit. Option D is incorrect because the interlock is based solely on time.

Comments
Reviewed by dtb 3/16-Validated 3/26

Question #58

36AADV004;

How are the Reactor Coolant Pumps physically interlocked with their Oil Lift Pumps?

a. The Oil Lift Pump must be running for 2 minutes before the RXCP breaker can be closed.

b. The Oil Lift Pump must be running for 3 minutes before the RXCP breaker can be closed.

c. The Oil Lift Pump must be running for 2 minutes and Oil Lift pressure must be greater than 550 psig before the RXCP breaker can be closed.

d. Oil Lift pressure must be greater than 550 psig before the RXCP breaker can be closed.

ANSWER:

d

TIME ELEMENT: 2 Minutes POINTS: 1.0

REFERENCES:

1) System Description Chapter 36, Page 28, Rev. Original

USE OF REFERENCES EXPECTED: NO KNPP SYSTEM NUMBER: 36A

OBJECTIVE NUMBER: TASK NUMBER: 0030010101

K/A NUMBER: 003000K6.14 K/A RATING: 3.7/3.0

STATIC SIMULATOR CONDITIONS: N/A ASSOCIATED JPM: N/A

QUALIFICATION LEVEL: RO/SRO REV: ORIG

Modify for 003a3.05

Record Number
059

QUESTION

Which ONE (1) of the following statements describes the conditions that must be met prior to starting a reactor coolant pump (RXCP) with any of the loop cold leg temperatures less than 200 degrees F?

The secondary water temperature of each Steam Generator must be ...

A. <75 degrees F above each of the RCS cold leg temperatures.
B. <100 degrees F above each of the RCS cold leg temperatures.
C. <125 degrees F above each of the RCS cold leg temperatures.
D. <150 degrees F above each of the RCS cold leg temperatures

Answer	Question Source	Cognitive Level	Question Type	Level
B	INPO Exam Bank- Salem 7/8/96	Memory	Modified	RO

Tier/Group	K/A#	K/A Rating (RO/SRO)	K/A System/Event
T2/G1	003 2.2.22	3.4/4.1	Reactor Coolant Pump

K/A Statement condition
2.2-Equipment Control

K/A Statement
2.2.22-Knowledge of limiting conditions for operations and safety limits.

Reference	Provided Reference	Objective
N-RC-36A	NONE	0360190101A01

Objective Statement
WHEN DIRECTED, START RXCP A(B) IN ACCORDANCE WITH N-RC-36A.

Explanation
Is correct because the temperature listed is both a "Tech Spec 3.1-1a" requirement and part of the procedure precautions. Option A, B, and D all contain the incorrect temperature.

Comments
Reviewed by dtb 3/16-Validated 3/26

Question #59

QuestionStem

Which ONE of the following statements describes the conditions that must be met prior to starting a reactor coolant pump (RCP)
with any of the loop cold leg temperatures less than 312F (As per Technical Specifications)?

Answer PZR level must be less than 92% or SG water temperature must be less than 50 decrees F greater than each RCS cold leg temperature..

Distract1 PZR level must be less than 80% or SG water temperature must be less than 40 degrees F greater than each RCS cold leg temperature.

Distract2 PZR level must be greater than 1650 cu. ft. or SG water temperature must be less than 50 degrees F less than each RCS cold leg temperature

Distract3 PZR level must be less than 1650 cu. ft. or SG water temperature must be less than 50 degrees F less than each RCS cold Lea temperature.

QuestionComment

CognitiveLevel	**RefMaterial**
N	

ExamDate 01/22/1996

AbbrevLocName	**KaNumber**	**KaSegment1**	**KaSegment2**	**KaSegment3**	**KaSegment4**	**KaSegment5**	**KaRevision**
Salem 1	..003000.G0.1		003000	G0	10		0

Tuesday, January 30, 2001
For 003 2.2.22 may need modification

Record Number
060

QUESTION

The following Plant conditions exist:

- Control Rod G11 indication is at 195 step with the remainder of Bank D at 205 steps.
- Bank D Group step counter is at 205 steps
- I&C reports a 2.966 volt DC reading for Rod G11 Conditioning Module voltage.
- "UPPER QUADRANT POWER TILT RATIO HIGH" is in alarm
- The Plant is operating at 87%

With the above condition the indicated quadrant tilt is determined to be greater than 1.09 what actions are required?

A. Eliminate the tilt OR restrict maximum power level to 2% for every percent of indicated power tilt ratio greater than 1.0.
B. Eliminate the tilt within 24 hours or reduce power to 50% or lower.
C. The Reactor shall immediately be brought to less than or equal to 5% power.
D. Within 30 minutes correct the tilt or reduce the reactor power to less than or equal to 50%.

Answer	Question Source	Cognitive Level	Question Type	Level
C	N/A	Comprehension	New	BOTH

Tier/Group	K/A#	K/A Rating (RO/SRO)	K/A System/Event
T1/G1	005AK1.01	3.1/3.8	Inoperable/Stuck Control Rod

K/A Statement condition
AK1-Knowledge of the operational implications of the following concepts as they apply to Inoperable/Stuck Control Rod: (CFR 41.8/41.10/45.3)

K/A Statement
AK1.01-Axial power imbalance

Reference	Provided Reference	Objective
Tech Spec 3.10-C.4, Rx Data Man. RD-14.1	Rx Data Man. RD-14.1 page 28	0480020401A01

Objective Statement
GIVEN AN UPPER OR LOWER QUADRANT POWER TILT RATIO HIGH ALARM, RESPOND IN ACCORDANCE WITH A-NI-48

Explanation
Option C is correct because Tech Spec 3.10-C.4 states that tilts greater than 1.09 if no rod is considered misaligned requires an immediate power reduction to less than or equal to 5%. Option A, B, D are incorrect because the listed requirements are not restrictive enough to meet the Tech Spec requirements listed in 3.10-C.4.

Comments
Reviewed by dtb 3/16-Validated 3/26

Record Number
061

QUESTION

The basis for maintaining S/G levels at 33% during a Natural Circulation Cooldown is to:

A. Prevent thermal shock to the S/G tube bundle
B. Provide a stable heat sink for decay heat removal
C. Conserve inventory in the condensate storage tanks during the cooldown
D. Maintain the cooldown rate in the RCS cold legs to less than 25 degrees per hour

Answer	Question Source	Cognitive Level	Question Type	Level
B	Facility Exam Bank-E00ADV016	Memory	Direct	BOTH

Tier/Group	K/A#	K/A Rating (RO/SRO)	K/A System/Event
T1/G1	015AK3.07	4.1/4.2	RCP Malfunctions

K/A Statement condition
AK3-Knowledge of the reasons for the following responses as they apply to the Reactor Coolant Pump Malfunctions (Loss of RC Flow): (CFR 41.5, 41.10/45.6/45.13)

K/A Statement
AK3.07-Ensuring that S/G levels are controlled properly for natural circulation enhancement

Reference	Provided Reference	Objective
ES-0.2 Background Document	NONE	E000050501K02

Objective Statement
GIVEN A NATURAL CIRCULATION COOLDOWN, EXPLAIN THE BASIS FOR ACTIONS TAKEN, PER ES-0.2 BACKGROUND DOCUMENT.

Explanation
Per ES-0.2 Background Document, step 6, states the S/G level is maintained at no-load level to provide a stable heat sink for the decay heat removal. This is the only reason to maintain no-load in ES-0.2. All other options are incorrect.

Comments
Reviewed by dtb 3/16-Validated 3/26

Question #61
E00ADV016;

The basis for maintaining SG levels at 33% during a Natural Circulation Cooldown is to:

a. Minimize the effects of a LOCA should one occur

b. Provide a stable heat sink for decay heat removal

c. Conserve inventory in the condensate storage tanks during the cooldown

d. Maintain the cooldown rate in the RCS cold legs to less than 25o per hour

ANSWER:

b

TIME ELEMENT: 2 Minutes POINTS: 1.0

REFERENCES:

1) IPEOP Background Document ES-0.2, REV. H

USE OF REFERENCES EXPECTED: NO KNPP SYSTEM NUMBER: E00

OBJECTIVE NUMBER: E000050501 TASK NUMBER:

K/A NUMBER: K/A RATING:

STATIC SIMULATOR CONDITIONS: N/A ASSOCIATED JPM: N/A

QUALIFICATION LEVEL: RO/SRO REV: C

For 015ak3.07

Record Number
062

QUESTION

The following Plant conditions exist::

- The Plant is at 100% steady state power.
- Current RCS boron concentration is 1049 ppm.
- Due to an urgent failure, control rods are currently inoperable.

The following events occur:

- RCS has been inadvertently diluted with 480 gallons of Makeup water.
- Subsequently, emergency boration is established at 80 gpm .

Which ONE (1) of the following is closest to the needed duration of emergency boration to return Tave to its original value?

A. 1/2 minute
B. 2 minutes
C. 4 minutes
D. 8 minutes

Answer	Question Source	Cognitive Level	Question Type	Level
A	INPO Exam Bank-Turkey Point 8/98	Analysis	Modified	RO

Tier/Group	K/A#	K/A Rating (RO/SRO)	K/A System/Event
T1/G1	024AK1.01	3.4/3.8	Emergency Boration

K/A Statement condition
AK1-Knowledge of the operational implications of the following concepts as they apply to Emergency Boration: CFR 41.8/41.10/45.3)

K/A Statement
AK1.01-Relationship between boron addition and change in Tave

Reference	Provided Reference	Objective
RD 2.2.9	RD 2.2.9	0350010501A01

Objective Statement
PERFORM AN EMERGENCY BORATION WHILE RESPONDING TO AN UNEXPECTED POSITIVE REACTIVITY CONDITION IN ACCORDANCE WITH E-CVC-35.

Explanation
The injection of 470 gallons of Makeup water would provide a 14 ppm dilution. To counteract the dilution, 38-40 gallon boration is required. This would take approximately 30 seconds at 80 gpm. All other options are incorrect as the would add too much boron and reduce Tave below the 100% value.

Comments
Reviewed by dtb 3/16-Validated 3/26

Question #62

QuestionStem

The following conditions exist on Unit 3:

-Unit 3 is at 100% steady state power.

-Current RCS boron concentration is 1049 ppm.

-Current BAST concentration is 5245 ppm.

-Due to an urgent failure, control rods are currently inoperable.

The following events occur on Unit 3:

-Unit 3 has been inadvertantly diluted with 480 gallons of primary water.

-Subsequently, emergency boration at 60 gpm is established.

Which ONE of the following is closest to the needed duration of emergency boration to return Tave to its original value?

Answer 2 minutes.

Distract1 1/2 minute

Distract2 4 minutes

Distract3 8 minutes.

QuestionComment

CognitiveLevel **RefMaterial**

N

ExamDate 08/07/1998

AbbrevLocName	KaNumber	KaSegment1	KaSegment2	KaSegment3	KaSegment4	KaSegment5	KaRevision
Turkey Point 3	..000024.AK1.		000024	AK1	01		
						01	

Record Number
063

QUESTION

The following Plant conditions exist:

- Plant is operating at 35% power.
- Ramping up to 100%.
- PS-1A/CV-31112, Loop A PRZR Spray Valve, is stuck OPEN.
- PRZR pressure is decreasing.
- PRZR Heaters are verified as energized.

An Operator takes manual control of valve PS-1A/CV-3112, Loop A PRZR Spray Valve, and was unable to close it. What action(s) shall be taken to terminate the pressure reduction caused by the spray valve failure?

A. Trip the Reactor, trip Reactor Coolant Pump A and Reactor Coolant Pump B and implement IPEOP E-0, "Reactor Trip or Safety Injection".
B. Initiate Safety Injection, trip Reactor Coolant Pump A and Reactor Coolant Pump B and implement IPEOP E-0, "Reactor Trip or Safety Injection".
C. Trip the Reactor, trip Reactor Coolant Pump A and implement IPEOP E-0, "Reactor Trip or Safety Injection".
D. Trip the Reactor, trip Reactor Coolant Pump B and implement IPEOP E-0, "Reactor Trip or Safety Injection".

Answer	Question Source	Cognitive Level	Question Type	Level
C	Facility Exam Bank-000027206A01	Memory	Direct	BOTH

Tier/Group	K/A#	K/A Rating (RO/SRO)	K/A System/Event
T1/G1	027AK3.03	3.7/4.1	Pressurizer Pressure Control System Malfunction

K/A Statement condition
AK3-Knowledge of the reasons for the following responses as they apply to the Pressurizer Pressure Control Malfunctions: (CFR 41.5, 41.10/45.6/45.13)

K/A Statement
AK3.03-Actions contained in EOP for PZR PCS malfunction

Reference	Provided Reference	Objective
E-0, E-0 Background Document	NONE	E000020501A01

Objective Statement
GIVEN A REACTOR TRIP CONDITION WITHOUT A SAFETY INJECTION, RESPOND IN ACCORDANCE WITH E-0.

Explanation
E-0 Background Document, page 2, the operator is expected to take actions for abnormal conditions to correct the condition. If these efforts fail, the operator is to trip the reactor and, if required, initiate SI. Since the spray valve did not close, then the operator should trip the reactor and then stop RXCP A to stop the spray flow and recover pressure control. After any Reactor trip E-0 is implemented. Option A and B are incorrect because tripping both RXCP is not required and could challenge plant safety. Option D is incorrect because the proper RXCP to stop is the RXCP A.

Comments
Reviewed by dtb 3/16-Validated 3/26

Question #63
000027206A01;

The following Plant conditions apply:

- Plant is operating at 35% power.
- Ramping up to 100%.
- PS-1A/CV-3112, Loop A PRZR Spray Valve, is stuck OPEN.
- PRZR pressure is decreasing.
- PRZR Heaters are verified as energized.

An Operator takes manual control of valve PS-1A/CV-3112, Loop A PRZR Spray Valve, and unsuccessfully attempts to close it. What action(s) shall be taken to terminate the pressure reduction caused by the spray valve failure?

a. Raise the auto set point on the PRZR Spray Control Master Controller.

b. Initiate Safety Injection and implement IPEOP E-0, "Reactor Trip or Safety Injection".

c. Trip the Reactor, trip 1A Reactor Coolant Pump and implement IPEOP E-0, "Reactor Trip or Safety Injection".

d. Trip the Reactor, trip 1B Reactor Coolant Pump and implement IPEOP E-0, "Reactor Trip or Safety Injection".

ANSWER:

C

TIME ELEMENT: 1 Minute POINTS: 1.0

REFERENCES:

1) IPEOP E-0, REV K
2) NAD 3.17, REV ORIG
3) SYS DESC CHAP 47, PG 47-24, REV ORIG

USE OF REFERENCES EXPECTED: Yes KNPP SYSTEM NUMBER: 36

OBJECTIVE NUMBER: See K/A number TASK NUMBER: 0000270501

K/A NUMBER: 000027EA2.06 K/A RATING: 3.6/4.2

STATIC SIMULATOR CONDITIONS: N/A ASSOCIATED JPM: N/A

QUALIFICATION LEVEL: RO/SRO REV: E
For 027ak3.03 – Modify for after trip

Record Number
064

QUESTION

Which ONE (1) of the following has its status indication on the Dedicated Shutdown Panel?

A. Containment pressure
B. Containment Fan Coil Unit 1A
C. Main Turbine Trip
D. Containment spray pump B

Answer	Question Source	Cognitive Level	Question Type	Level
B	INPO Exam Bank-Cook 1/96	Memory	Modified	RO

Tier/Group	K/A#	K/A Rating (RO/SRO)	K/A System/Event
T1/G1	068AK2.01	3.9/4.0	Control Room Evac

K/A Statement condition
AK3-Knowledge of the reasons for the following responses as they apply to the Loss of Containment Integrity: (CFR 41.5, 41.10/45.6/45.13)

K/A Statement
AK2.01-Auxiliary shutdown panel layout

Reference	Provided Reference	Objective
E3175	NONE	0180000001K07

Objective Statement
LOCATE ALL SYSTEM CONTROLS AND INDICATIONS WHILE OPERATING THE REACTOR BUILDING VENTILATION SYSTEM FROM THE CONTROL ROOM AND THE DEDICATED SHUTDOWN PANEL.

Explanation
Containment fan coil units 1A and 1B both have their control switches and status indication on the DSP

Comments
Reviewed by dtb 3/16-Validated 3/26

Question #64

QuestionStem
Which ONE of the following conditions has its status indication available on the Unit 1 Hot Standby Panel?

Answer Reactor Trip

Distract1 Safety Injection

Distract2 Containment Isolation - Phase A

Distract3 Main Feedwater Isolation

QuestionComment

CognitiveLevel **RefMaterial**

N

ExamDate 01/08/1996

AbbrevLocName	KaNumber	KaSegment1	KaSegment2	KaSegment3	KaSegment4	KaSegment5	KaRevision
Cook 1	..000068.EK2.		000068	EK2	01		01

Record Number
065

QUESTION

The following Plant conditions exist:

- Reactor Trip and Safety Injection actuates.

The Operators determine that window box "SEAL WATER LEAKOFF CVC-211" is NOT LIT. All other required lights are LIT. What Operator action, if any, shall be taken to close the CVC-211, RXCP Seal Return Isolation valve?

A. Manually depress the Safety Injection Initiation Push Buttons for both trains.
B. Manually depress the Containment Isolation Push Buttons for both trains.
C. Manually close CVC-211, RXCP Seal Return Isolation Valve.
D. NO action required if CVC-212, RXCP Seal Return Isolation Valve, is closed.

Answer	Question Source	Cognitive Level	Question Type	Level
C	Facility Exam Bank-000069202A01	Memory	Direct	BOTH

Tier/Group	K/A#	K/A Rating (RO/SRO)	K/A System/Event
T1/G1	069AK3.01	3.8*/4.2	Loss of CTMT Integrity

K/A Statement condition
AK3-Knowledge of the reasons for the following responses as they apply to the Loss of Containment Integrity: (CFR 41.5, 41.10/45.6/45.13)

K/A Statement
AK3.01-Guidance contained in EOP for loss of containment integrity

Reference	Provided Reference	Objective
E-0	NONE	E000010501A01

Objective Statement
GIVEN A REACTOR TRIP CONDITION WITH SAFETY INJECTION, RESPOND IN ACCORDANCE WITH E-0.

Explanation
IPEOP E-0 step 13 directs operators to close any open valve or damper that is not lit on the CI active status panel

Comments
Reviewed by dtb 3/16-Validated 3/26

Question #65
000069202A01;

The following Plant conditions apply:

- Reactor Trip and Safety Injection actuates.

The Operators determine all of the Containment Vent Isolation Valves have ÞNOTÝ closed. What Operator action shall be taken to close Containment Vent Isolation Valves?

a. Manually depress the Safety Injection Initiation Push Buttons for both trains.

b. Manually depress the Containment Isolation Push Buttons for both trains.

c. Manually close any open valve or damper indicated on the Containment Isolation Active Status Panel.

d. Manually close any open valve or damper indicated on the Safety Injection Active Status Panel.

ANSWER:

c.

TIME ELEMENT: 1 Minute POINTS: 1.00

REFERENCES:

1) IPEOP B.G. Doc E-0, Rev F
2) IPEOP E-0, Rev J

USE OF REFERENCES EXPECTED: No KNPP SYSTEM NUMBER: 056

OBJECTIVE NUMBER: See K/A number TASK NUMBER: 0000690501

K/A NUMBER: 000069EA2.02 K/A RATING: 3.4/3.3
029000A3.01 4.0/3.5

STATIC SIMULATOR CONDITIONS: N/A ASSOCIATED JPM: N/A

QUALIFICATION LEVEL: RO/SRO REV: C

For 069ak3.01

Record Number
066

QUESTION

An Alternate Shutdown is in progress due to a fire in the Cable Spreading Room. An immediate Control Room evacuation was required and entry into E-0-06, "Fire in Alternate Fire Zone".

During the performance of E-0-06, the performance of which of the following would stop the Feedwater and Condensate pumps?

A. De-energizing buses 1 and 2 by the Control Operator B; Buses 3 and 4 by the CRS.
B. Manually tripping Main FW and Condensate pump breakers locally at Buses 1, 2, 3, and 4.
C. Energizing the 4160v and 480v Dedicated Shutdown Electrical system causing a load shed.
D. NO Action is taken for Non-Vital electrical power because the loss of off-site power is assumed.

Answer	**Question Source**	**Cognitive** Memory **Level**	**Question Type**	BOTH **Level**
A	INPO Exam Bank-Arkansas Nuclear One 08/1998		Modified	

Tier/Group	**K/A#**	**K/A Rating (RO/SRO)**	**K/A System/Event**
T1/G1	068AA1.27	3.2*/3.4*	Control Room Evac

K/A Statement condition
AA1-Ability to operate and/or monitor the following as they apply to the Control Room Evacuation: (CFR 41.7/45.5/45.6)

K/A Statement
AA1.27-Local trip of main feed pumps and Condensate pumps

Reference	**Provided Reference**	**Objective**
E-0-06	NONE	E060010501A01

Objective Statement
GIVEN A FIRE IN AN ALTERNATE FIRE ZONE, RESPOND IN ACCORDANCE WITH E-0-06.

Explanation
De-energizing buses 1 and 2 is E-0-06 step 11 for the Control Operator B. De-energizing buses 3 and 4 is E-0-06 step 27 for the Control Room Supervisor. Distracter B, is incorrect because tripping single non-vital components is not addressed, only de-energizing the bus. Distracter C is the second high level step assigned to the Control Room Supervisor and a load shed would not de-energize the Feedwater or Condensate pumps. Option D is incorrect because, even though loss of off-site power is assumed, busses 1-4 and 6 are de-energized.

Comments
Reviewed by dtb 3/16-Validated 3/26

Question #66

QuestionStem

Given:

Alternate Shutdown in progress due to fire in the Cable Spreading Room.
An immediate control room evacuation was required.

Which of following is performed by the Control Board Operator (RO#1 or RO#2) ?

Answer Align steam to EFW pump P-7A

Distract1
Manually trip both Main FW pumps locally.

Distract2
Start and stop HPI pump to maintain PZR level.

Distract3
Manually trip the Main Turbine at the front standard.

QuestionComment

CognitiveLevel	RefMaterial
N	

Arkansas Nuclear One	AbbrevLocName	ExamDate
2	08/28/1998	

KaNumber	KaSegment1	KaSegment2	KaSegment3	KaSegment4	KaSegment5	KaRevision

Modify for 068aa1.27 E-0-06 STEP 11 & 27. Need to include both. How tripped? A. crs bus 3-4 & RO-b bus 1&2 B. CRS manually opening breaker, c swap a , d swap b

Record Number
067

QUESTION

The following Plant conditions exist:

- The plant was operating at 100% power.
- A small break LOCA occurred.
- FR-C.1, "Response to Inadequate Core Cooling", is in progress.
- The crew was unable to start any SI pump.
- RHR pump A is NOT running.
- RHR pump B is running with zero flow.
- PRZR level is off-scale low.
- RVLIS is indicating 0%.
- RXCP "A" is running.
- SI Accumulators have been isolated.

The crew is preparing to depressurize the SGs to atmospheric pressure. Select the statement that explains what should be done concerning RXCP "A" at this point in the procedure.

A. Leave the RXCP running regardless of plant conditions.
B. Leave the RXCP running until the SGs have been depressurized to atmospheric.
C. Trip the RXCP only if a high temperature alarm occurs on the pump.
D. Trip the RXCP due to the anticipated loss of #1 seal requirements.

Answer	Question Source	Cognitive Level	Question Type	Level
D	INPO Exam Bank- North Anna 1/26/96	Comprehension	Modified	BOTH

Tier/Group	K/A#	K/A Rating (RO/SRO)	K/A System/Event
T1/G1	074EK3.04	3.9/4.2	Inad. Core Cooling

K/A Statement condition
EK3-Knowledge of the reasons for the following responses as they apply to the Inadequate Core Cooling:
(CFR 41.5/41.10/45.6/45.13)

K/A Statement
EK3.04-Tripping RCPs

Reference	Provided Reference	Objective
FR-C.1 Background Document	NONE	FRC0010501K04

Objective Statement
GIVEN AN INADEQUATE CORE COOLING CONDITION, EXPLAIN THE BASIS FOR ACTIONS TAKEN, PER FR-C.1 BACKGROUND DOCUMENT.

Explanation
Choice A-This would only be true if the SG depressurization had not worked. Because the accumulators are isolated it implies that the depressurization to 210 psig worked. Choice B-The RXCP needs to stopped because the SG are going to be depressurized so it needs to be done before, not after, the SGs are depressurized. Choice C-The high temperature alarm is not relevant. Choice D-This is what the Background document stipulates.

Comments
Reviewed by dtb 3/16-Validated 3/26

Record Number
068

QUESTION

The crew is performing FR-C.2, "Response To Degraded Core Cooling", in response to an orange condition on Core Cooling. They are depressurizing the RCS to 210 psig when the STA informs the CRS that there is a red path condition on Integrity.

Which of the following actions should be done and for what reason in response to this information?

A. Continue in FR-C.2, "Response To Degraded Core Cooling", because Core Cooling is a higher priority than Integrity.
B. Immediately transition to FR-P.1, "Response to Imminent Pressurized Thermal Shock Condition", because a red path always overrides an orange path.
C. Transition to FR-P.1, "Response to Imminent Pressurized Thermal Shock Condition", when the RCS is at 210 psig because it is important to complete this particular step before the transition is made.
D. Continue in FR-C.2, "Response To Degraded Core Cooling", because the RCS depressurization intentionally caused the red path on Integrity and it would be counter-productive to perform FR-P.1, "Response to Imminent Pressurized Thermal Shock Condition".

Answer	Question Source	Cognitive Level	Question Type	Level
D	INPO Exam Bank- Salem 7/8/96	Analysis	Modified	RO

Tier/Group	K/A#	K/A Rating (RO/SRO)	K/A System/Event
T1/G1	E06 2.4.48	3.5/3.8	Degraded Core Cooling

K/A Statement condition
2.4-Emergency Procedures /Plan

K/A Statement
2.4.48-Ability to interpret control room indications to verify the status and operation of system, and understand how operator actions and directives affect plant and system conditions.

Reference	Provided Reference	Objective
FR-C.2 Background Document	NONE	FRC0020501K04

Objective Statement
GIVEN A DEGRADED CORE COOLING CONDITION, EXPLAIN THE BASIS FOR ACTIONS TAKEN PER FR-C.2 BACKGROUND DOCUMENT.

Explanation
Choice A-Although Core Cooling is a higher priority that Integrity, the general rule is that any red path would override an orange path even from a lower priority condition. Choice B-This would generally be true however there is a Caution before the step that tells you not to transition to FR-P.1 in this case. Choice C-The transition would only occur after C.2 is complete as explained in the background. Choice D-This is what the Background document stipulates due to the requirement to soak in FR-P.1. If you soaked you would boil off the RCS inventory exacerbating the degraded core cooling condition you already have.

Comments
By dtb 3/16-Validated 3/26

Question #68

QuestionStem

Given the following:

- The crew was implementing EOP-LOCA-1, "Loss of Reactor Coolant," in response to a large break LOCA when Red path on the CORE COOLING status tree requires a transition to EOP-FRCC-1, "Response to Inadequate Core Cooling."

- While performing EOP-FRCC-1, it is observed that the CORE COOLING status tree has changed from a RED to a YELLOW condition.

- A RED path on EOP-FRCE-1, "response to Excessive Containment Pressure," status tree is identified.

WHICH ONE (1) of the following is the proper procedural transition, and why?

Answer Complete EOP-FRCC-1; since it was entered due to a RED path, it must be completed unless a higher priority path occurs.

Distract1 Immediately transition to EOP-FRCE-1 since a RED path is a higher priority than a yellow path.

Distract2 Complete EOP-FRCC-1; since once ANY FRP is entered, is must be completed before any other transition ccan be made.

Distract3 Perform the actions of EOP-FRCC-1 and EOP-FRCE-1 simultaneously, since FRP procedures of the same priority can be executed together.

QuestionComment

CognitiveLevel N **RefMaterial**

ExamDate 07/08/1996

AbbrevLocName	KaNumber	KaSegment1	KaSegment2	KaSegment3	KaSegment4	KaSegment5	KaRevision
Salem 1	..000074.G0.1		000074	G0	12		2

For e06 2.4.48

Record Number
069

QUESTION

Given that a loss of reactor coolant has occurred. What advantage is there to performing a saturated recovery as opposed to performing a subcooled recovery?

A. It is easier to monitor RCS inventory with a saturated recovery.
B. Pressure control is easier with a saturated recovery.
C. RCS leakage is reduced with a saturated recovery.
D. A saturated recovery provides greater margin to core uncovery than a subcooled recovery does.

Answer	Question Source	Cognitive Level	Question Type	Level
C	N/A	Comprehension	New	BOTH

Tier/Group	K/A#	K/A Rating (RO/SRO)	K/A System/Event
T1/G1	E07EK1.2	3.1/3.6	Saturated Core Cooling

K/A Statement condition
EK1-Knowledge of the operational implications of the following concepts as they apply to the (Saturated Core Cooling) (CFR 41.8/41.10, 45.3)

K/A Statement
EK1.2-Normal, abnormal and emergency operating procedures associated with Saturated Core Cooling

Reference	Provided Reference	Objective
ECA-3.1 Background Document, step 14	NONE	E030040501A01

Objective Statement
GIVEN A SGTR WITH A LOSS OF REACTOR COOLANT-SUBCOOLED RECOVERY DESIRED, RESPOND IN ACCORDANCE WITH ECA-3.1.

Explanation
Choice a-It is actually more difficult to monitor inventory in a saturated recovery because a loss of inventory from a subcooled condition will initially be seen as a reduction in subcooling. Choice b-RCS subcooling actually facilitates pressure control. Choice c-Leakage from the RCS is directly related to subcooling because that raises the delta P across the leakage boundary hence raising flow. Choice d-In actuality, margin to core uncovery is reduced when a saturated recovery approach is used.

Comments
Reviewed by dtb 3/16-Validated 3/26

Record Number
070

QUESTION

The following Plant conditions exist:

- Steam Generator A is FAULTED and FR-P.1, "Response to Imminent Pressurized Thermal Shock Condition", has been entered.
- A soak is required by FR-P.1
- All plant equipment was in a normal lineup and operable prior to the event.

Which of the following failures, if they occurred, would have a negative impact of the RCS soak? (Assume NO operator action)

A. PT-419, RCS Pressure Wide Range, fails off scale HIGH.
B. PT-449, Pressurizer Pressure, fails off scale LOW.
C. S/G B Outlet Pressure Switch (PS-16113) failure to HIGH pressure position.
D. AFW Pump A TRIP on low discharge pressure.

Answer	Question Source	Cognitive Level	Question Type	Level
C	N/A	Comprehension	New	RO

Tier/Group	K/A#	K/A Rating (RO/SRO)	K/A System/Event
T1/G1	E08EK2.2	3.6/4.0	Pressurized Thermal Shock

K/A Statement condition
EK2-Knowledge of the interrelations between the (Pressurized Thermal Shock) and the following: (CFR 41.7/45.7)

K/A Statement
EK2.2-Facility's heat removal systems, including primary coolant, emergency coolant, the decay heat removal systems, and relations between the proper operation of these systems to the operation of the facility

Reference	Provided Reference	Objective
E1627	NONE	0060000001K03

Objective Statement
EXPLAIN THE RESPONSE TO THE OPERATION OF ALL MAIN STEAM SYSTEM CONTROLS IN ACCORDANCE WITH LOGIC DIAGRAM/SCHEMATIC E1627.

Explanation
Steam Generator B Outlet Pressure Switch fails HIGH will cause the S/G PORV to open and would require local isolation. This failure would cause both S/G to be faulted and an uncontrolled cooldown to occur until isolated. Option A is incorrect because PT-419 effects only RHR operation, which is not in service if FR-P.1 is entered. Option B is incorrect because PT-449 is used only to control the PRZR PORV when in the 4-3 position of the selector switch (normal position is 2-3). Option D is incorrect because stopping the feedwater flow to the faulted S/G would not effect the cooldown.

Comments
Reviewed by dtb 3/16-Validated 3/26

Record Number
071

QUESTION

The following Plant conditions exist:

- A natural circulation cooldown is in progress per ES-0.2, "NATURAL CIRCULATION COOLDOWN".
- The operator has established a stable 25°F/hour cooldown rate.
- It is estimated that average AFW flow rate for the cooldown will be 200 gpm.
- It is estimated that average AFW flow rate to maintain Hot Shutdown for 24 hours would be 100 gpm.
- CSTs currently have 50,000 gallons available and Makeup water is limited to a total of 60 gallons per minute.
- Current RCS temperature is 547°F.

Which ONE (1) of the following describes the appropriate procedural actions?

A. Stop the cooldown and remain in ES-0.2 until CST level is recovered.
B. Increase the cooldown rate and remain in ES-0.2 until Cold Shutdown is reached.
C. Transition to ES-1.3, TRANSFER TO CONTAINMENT SUMP RECIRCULATION, when CST is <4% level.
D. Transition to ES-0.3, NATURAL CIRCULATION COOLDOWN WITH STEAM VOID IN VESSEL and increase the cooldown rate.

Answer	Question Source	Cognitive Level	Question Type	Level
D	INPO exam bank-Turkey Point 9/97	Analysis	Direct	RO

Tier/Group	K/A#	K/A Rating (RO/SRO)	K/A System/Event
T1/G1	E10EA2.2	3.4/3.9	Natural Circulation with Steam Void in Vessel with/without RVLIS

K/A Statement condition
EA2-Ability to determine and interpret the following as they apply to the (Natural Circulation with Steam Void in Vessel with/without RVLIS) (CFR 43.5/45.13)

K/A Statement
EA2.2-Adherence to appropriate procedures and operation within the limitations in the facility's license and amendments

Reference	Provided Reference	Objective
ES-0.2, ES-0.2 Background Document	NONE	E000050501K06

Objective Statement
IDENTIFY THE CONDITIONS WHICH WOULD REQUIRE A PROCEDURAL TRANSITION, WHILE PERFORMING A NATURAL CIRCULATION COOLDOWN, IN ACCORDANCE WITH ES-0.2.

Explanation
To cooldown to Cold Shutdown (200°) from 547° would require about 116,000 gal. in the CST. This would mean a 50,000 gal. inventory in the CST would be inadequate for the natural circ. Cooldown. Per step 12 of ES-1.2 and the background document, if CST inventory will not support a 25°F/hour the operator should transition to ES-1.3. Option A is incorrect because the operator would not be able to recover CST level until the plant is cooled down. Option B is incorrect because ES-0.2 limits cooldown rate to 25°F/hour. Option C is incorrect because the entry conditions for ES-1.3 are not met.

Comments
Reviewed by dtb 3/16-Validated 3/26

Question #71

QuestionStem

During the performance of 3-EOP-ES-0.2, NATURAL CIRCULATION COOLDOWN, while cooling down the RCS at a rate of 25
degrees F/hour, water inventory in the Condensate Storage Tanks is lost.

Which ONE of the following describes the appropriate procedural actions?

Answer Transition to ES-0.3, NATURAL CIRCULATION COOLDOWN WITH STEAM VOID IN VESSEL (WITH RVLMS) and increase the cooldown rate.

Distract1 Stop the cooldown and remain in ES-0.2.

Distract2 Maintain the same cooldown rate and remain in ES-0.2.

Distract3 Increase the cooldown rate and remain in ES-0.2.

QuestionComment

CognitiveLevel N **RefMaterial**

ExamDate 09/12/1997

AbbrevLocName	KaNumber	KaSegment1	KaSegment2	KaSegment3	KaSegment4	KaSegment5	KaRevision
Turkey Point 3	..000WE0.9A.		000WE0	9A	21		21

For E10EA2.2 MODIFY

Record Number
072

QUESTION

The following Plant conditions exist:

- A natural circulation cooldown is in progress per ES-0.3, Natural Circulation Cooldown With Steam Void In Vessel
- A steam bubble exists in the head region.
- Prior to the event the plant was in a normal at power lineup.
- LT-427, PRZR Level (Channel II), failed low TWO (2) minutes ago.

How would actual PRZR Level respond and why?

A. PRZR level would increase due to the loss of PRZR Heaters and Letdown.
B. PRZR level would remain the same due to the continued Charging flow and loss of Letdown.
C. PRZR level would decrease due to the collapsing steam bubble.
D. PRZR level would remain the same due to LT-428 being the controlling channel.

Answer	Question Source	Cognitive Level	Question Type	Level
C	N/A	Analysis	New	BOTH

Tier/Group	K/A#	K/A Rating (RO/SRO)	K/A System/Event
T1/G1	E10EA1.1	3.8/3.6	Natural Circulation with Steam Void in Vessel with/without RVLIS

K/A Statement condition
EA1-Ability to operate and/or monitor the following as they apply to the (Natural Circulation with Steam Void in Vessel with/without RVLIS) (CFR 41.7/45.5/45.6)

K/A Statement
EA1.1-Components, and functions of control and safety systems, including instrumentation, signals, interlocks, failure modes, and automatic and manual features

Reference	Provided Reference	Objective
E2039, ES-0.3 Background Document	NONE	E000060501K04

Objective Statement
GIVEN A NATURAL CIRCULATION COOLDOWN WITH A STEAM VOID IN THE VESSEL, EXPLAIN THE BASIS FOR ACTION TAKEN PER ES-0.3 BACKGROUND DOCUMENT.

Explanation
Per Step 4 of ES-0.3 with charging flow greater than letdown, the steam bubble in the head will collapse due to the increased pressure. The collapsing steam bubble will result in the PRZR level decreasing. Option A would occur if no void in the vessel existed. Option B represents a balance of charging flow to collapse of the steam bubble which is not true. Option D would be true if LT-427 did not isolate letdown.

Comments
Reviewed by dtb 3/16-Validated 3/26

Record Number
073

QUESTION

The following Plant conditions exist:

- The Plant was operating at 100% power.
- An earthquake resulted in a rupture of the Main Steam Header A.
- The operating crew was unable to close either MSIV and transitioned to ECA-2.1, "UNCONTROLLED DEPRESSURIZATION OF ALL STEAM GENERATORS".
- The Auxiliary Operator reports MS-1A was closed locally.
- The RO observes S/G A and S/G B pressures are NOT increasing.

Based on the above information, the operating crew should:

A. Transition to E-2, "FAULTED STEAM GENERATOR ISOLATION".
B. Transition to E-3, "STEAM GENERATOR TUBE RUPTURE".
C. Remain in ECA-2.1, "UNCONTROLLED DEPRESSURIZATION OF BOTH STEAM GENERATORS".
D. Transition to ES-1.1, "SI TERMINATION".

Answer	Question Source	Cognitive Level	Question Type	Level
C	INPO Exam Bank-North Anna 1/96	Comprehension	Modified	BOTH

Tier/Group	K/A#	K/A Rating (RO/SRO)	K/A System/Event
T1/G1	E12EA1.3	3.4/3.9	Uncontrolled Depressurization of all Steam Generators

K/A Statement condition
EA1-Ability to operate and/or monitor the following as they apply to the (Uncontrolled Depressurization of all Steam Generators) (CFR 41.7/45.5/45.6)

K/A Statement
EA1.3-Desired operating results during abnormal and emergency situations

Reference	Provided Reference	Objective
ECA 2.1 Background Document, M203, ECA-2.1 QRF	NONE	E020020501A02

Objective Statement
WHILE RESPONDING TO AN UNCONTROLLED DEPRESSURIZATION OF BOTH STEAM GENERATORS, IMPLEMENT THE ECA-2 QRF.

Explanation
Even with one Steam Generator apparently isolated, positive indication of increasing Steam Generator pressure is required to transition to E-2. The increasing pressure cannot be due to SI termination. The crew must remain in ECA-2.1

Comments
Reviewed by dtb 3/28-Validated 3/26

Question #73

QuestionStem

Given the following conditions:

Unit 1 was operating at 100% power.
An earthquake resulted in a rupture of the 40" main steam manifold.
The operating crew was unable to close neither the MSIVs nor the NRVs and has transitioned to l-ECA-2.1, "UNCONTROLLED
DEPRESSURIZATION OF ALL STEAM GENERATORS
The SEM has declared an alert.
A report comes in from the MSVH that they have manually closed 1-MS-NRV-101C.
The RO observes "C" SG pressure increasing slowly.

Based on the above information, the operating crew should:

Answer transition to 1-E-2, "FAULTED STEAM GENERATOR ISOLATION".

Distract1 transition to 1-E-3, "STEAM GENERATOR TUBE RUPTURE.

Distract2 remain in 1-ECA-2.1 until RHR is in service.

Distract3 remain in l-ECA-2.1 until SI is terminated.

QuestionComment

CognitiveLevel **RefMaterial**

ExamDate 01/26/1996

AbbrevLocName	KaNumber	KaSegment1	KaSegment2	KaSegment3	KaSegment4	KaSegment5	KaRevision
North Anna 1	..000040.G0.1		000040	G0	12		2

Record Number
074

QUESTION

The following Plant conditions exist:

- Operators are performing ECA 2.1, "Uncontrolled Depressurization of All Steam Generators."
- Cooldown rate is 125 degrees per hour.
- Narrow range Steam Generator levels are off scale LOW.
- AFW flow on A and B Steam Generators indicates 100 gpm each.

Which of the following is the appropriate action to take?

A. Adjust AFW flow to 60 gpm on each Steam Generator.
B. Adjust AFW flow to 0 gpm on each Steam Generator.
C. Do NOT adjust AFW flow to insure that heat sink criteria are maintained.
D. Transition to E-2, "FAULTED STEAM GENERATOR ISOLATION".

Answer	Question Source	Cognitive Level	Question Type	Level
A	INPO Exam Bank-Watts Bar 2/96	Memory	Modified	BOTH

Tier/Group	K/A#	K/A Rating (RO/SRO)	K/A System/Event
T1/G1	E12EK2.1	3.4/3.7	Uncontrolled Depressurization of all Steam Generators

K/A Statement condition
EK2-Knowledge of the interrelations between the (Uncontrolled Depressurization of all Steam Generators) and the following: (CFR 41.7/45.7)

K/A Statement
EK2.1-Components, and functions of control and safety systems, including instrumentation, signals, interlocks, failure modes, and automatic and manual features

Reference	Provided Reference	Objective
ECA 2.1, ECA 2.1 Background Document	NONE	E020020501K04

Objective Statement
GIVEN AN UNCONTROLLED DEPRESSURIZATION OF BOTH STEAM GENERATORS, EXPLAIN THE BASIS FOR ACTIONS TAKEN, PER ECA-2.1 BACKGROUND DOCUMENT.

Explanation
A minimum flow of 60 gpm must be maintained to each Steam Generator with a narrow range level of less than 4%. Minimizing feed flow minimizes subsequent thermal shock to Steam Generator components

Comments
Reviewed by dtb 3/28-Validated 3/26

Question #74

QuestionStem

Given the following:

o Operators are performing ECA 2.1, "Uncontrolled Depressurization of All Steam Generators."
o Cooldown rate is 125 degrees per hour.
o Steam Generator levels range from 1% to 3% NR level.

WHICH ONE (1) of the following is the required AFW flow to the steam generators in this condition?

Answer Minimum detectable flow.

Distract1 0 gpm flow to any S/G.

Distract2 100 gpm to each S/G.

Distract3 410 gpm total flow.

QuestionComment

CognitiveLevel	RefMaterial
N	

ExamDate 02/26/1996

AbbrevLocName	KaNumber	KaSegment1	KaSegment2	KaSegment3	KaSegment4	KaSegment5	KaRevision
Watts Bar 1	..000040.A1.1		000040	A1	10		0

For E12EK2.1 MODIFY

Record Number
075

QUESTION

One (1) Shutdown Bank A rod has fallen into the core.

A Dropped Rod Recovery is in progress per E-CRD-49C, "Dropped Rod".

Rod recovery has commenced and an "Rod Control Urgent Failure" alarm is present.

Which of the following explains why the urgent failure alarm is received?

A. There is NO master cycler input for Shutdown Bank A.
B. Shutdown Rods receive NO input from the bank overlap unit.
C. Shutdown Rods have NO multiplexing thyristors.
D. There are two groups of rods in Shutdown Bank A.

Answer	Question Source	Cognitive Level	Question Type	Level
D	Facility Exam Bank-049ADV038	Comprehension	Modified	BOTH

Tier/Group	K/A#	K/A Rating (RO/SRO)	K/A System/Event
T1/G2	003AK2.05	2.5/2.8	Dropped Control Rod

K/A Statement condition
AK2-Knowledge of the interrelations between the Dropped Control Rod and the following: (CFR 41.7/45.7)

K/A Statement
AK2.05-Control rod drive power supplies and logic circuits

Reference	Provided Reference	Objective
E-CRD-49C, System Description 049	NONE	0490030501A01

Objective Statement
GIVEN A DROPPED ROD, RESPOND IN ACCORDANCE WITH E-CRD-49C.

Explanation
Since shutdown bank A consist of two groups, the group without the dropped rod will have all of it's lift coil disconnect switches in disconnect. Therefore, when a "Go pulse" is generated for this group there will be no rod motion from that group resulting in an urgent failure

Comments
Reviewed by dtb 3/28-Validated 3/26

049ADV038;

Given the following:

- ONE (1) Shutdown Bank B rod has fallen into the core.
- A dropped rod recovery is in progress per A-CRD-49B, "Full Length Rod Misalignment."
- Rod recovery has commenced.
- An URGENT failure alarm is NOT present.

Which ONE (1) of the following explains why the URGENT failure alarm is ÞNOTÝ energized?

a. There is no master cycler input for Shutdown Bank B.

b. Shutdown rods receive no input from the bank overlap unit.

c. Shutdown rods have no multiplexing thyristors.

d. There is only one group of rods in Shutdown Group B.

ANSWER:

d

TIME ELEMENT: 3 Minutes POINTS: 1.0

REFERENCES:

1) KNP Procedure A-CRD-49B, Rev. N
2) KNP Sys Desc 049, Rev. A

USE OF REFERENCES EXPECTED: NO KNPP SYSTEM NUMBER: 049

OBJECTIVE NUMBER: 0010140101 TASK NUMBER:

K/A NUMBER: 001050A2.01 K/A RATING: 3.8/3.7

STATIC SIMULATOR CONDITIONS: N/A ASSOCIATED JPM: N/A

QUALIFICATION LEVEL: RO/SRO REV: A

Record Number
076

QUESTION

The plant is at 100% power when Rod K-9 drops into the core without generating a Negative Rate Trip.

Consider the changes in the following parameters:

	Before	After
N-41	100%	101%
N-42	100%	101%
N-43	100%	103%
N-44	100%	95%
Tave	559°F	559°F
RCS Pressure	2235 psig	2230 psig

What is the concern with these parameters?

A. Due to the constant Tave, Hot Channel Factor in some channel may exceed Tech. Spec. Limits
B. Due to the difference in power readings, the NI will need to be adjusted.
C. The shadow effect of K-9 may effect the Reactor Protection capabilities.
D. These are expected parameters for a dropped rod and only the dropped rod is of concern.

Answer	Question Source	Cognitive Level	Question Type	Level
A	N/A	Analysis	New	BOTH

Tier/Group	K/A#	K/A Rating (RO/SRO)	K/A System/Event
T1/G2	003AK3.07	3.8*/3.9*	Dropped Control Rod

K/A Statement condition
AK3-Knowledge of the reasons for the following responses as they apply to the Dropped Control Rod: (CFR 41.5, 41.10/45.6/45.13)

K/A Statement
AK3.07-Tech-Spec limits for Tave

Reference	Provided Reference	Objective
TS-2.1 Basis	NONE	1190110301K01

Objective Statement
DISCUSS THE SAFETY LIMITS AND LIMITING SAFETY SYSTEM SETTINGS, INCLUDING SETPOINTS AND BASES, IN ACCORDANCE WITH T.S. SECTION 2.0.

Explanation
Tave limits are based on the Hot Channel Factors. With a dropped rod and maintaining constant power and temperature mean power generation in other part of the core has increased as indicated by the increase in N-43 (located directly across the core from N-44). This means that the Hot Channels would be closer to the limit. Option B is incorrect as the NIs are responding to the dropped rod. Option C is incorrect because there are still the required 3 channels of NIs unaffected. Option D is incorrect because core peaking factors are always a concern with dropped rods.

Comments
Reviewed by dtb 3/28-Validated 3/26

Record Number
077

QUESTION

The following Plant conditions exist:

- Pressurizer PORVs have OPENED and the accelerometers indicate PR-3A, Pressurizer Safety, has also OPENED due to a pressure transient.
- A Reactor TRIP has occurred.
- PRESSURIZER PORV DISCHARGE TEMP HIGH is in alarm
- PRESSURIZER SAFETY DISH TEMP HIGH is in alarm

Pressurizer level and pressure have been recovered.

Which of the below indications are used to determine that the Pressurizer Safeties and PORVs have CLOSED and are NOT leaking?

A. The Red light closed indications on the PORVs are ON and accelerometers for PR-3A have cleared.
B. The Green light closed indications on the PORVs are ON, accelerometers for PR-3A have cleared and PORV Outlet TI-438 is holding stable at 300°F and Safety A Outlet TI-436 is stable at 289°F.
C. The Red light closed indications on the PORVs are ON, accelerometers for PR-3A have cleared and PORV Outlet TI-438 is at 250°F, and Safety A Outlet TI-436 is at 253°F
D. The Green light closed indications on the PORVs are ON, accelerometers for PR-3A have cleared, PORV Outlet TI-438 is less than 200°F, and Safety A Outlet TI-436 is less than 200°F.

Answer	Question Source	Cognitive Level	Question Type	Level
D	N/A	Comprehension	New	BOTH

Tier/Group	K/A#	K/A Rating (RO/SRO)	K/A System/Event
T1/G2	008AA1.07	4.0/4.2	Pressurizer Vapor Space Accident

K/A Statement condition
AA1-Ability to operate and/or monitor the following as they apply to the Pressurizer Vapor Space Accident: (CFR 41.7/45.5/45.6)

K/A Statement
AA1.07-Reseating of code safety and PORV

Reference	Provided Reference	Objective
A-RC-36D	NONE	0360050401A01

Objective Statement
GIVEN LEAKAGE FROM PR-1A(B), RESPOND IN ACCORDANCE WITH A-RC-36D.

Explanation
Option D is correct because both the position indication for the PORVs and the Safeties indicate closed and their downstream temperatures less than saturation temperatures for the conditions. Option A and C is incorrect because the indication lights for closed are green. Option B is incorrect because temperature is indicating an open valve condition. Option C is incorrect because the temperature is indicating a leaking valve condition.

Comments
Reviewed by dtb 3/28-Validated 3/26

Record Number
078

QUESTION

The following Plant conditions exist:

- The plant was tripped from 100% power
- A small break LOCA has occurred after the trip
- One train of Safety Injection is available and has started

How would voiding in the core affect the SUBCRITICALLY Critical Safety Function indicator on the SAS Unit?

A. Intermittently flash ORANGE
B. Indicate solid YELLOW
C. Intermittently flash RED
D. Indicate solid ORANGE

Answer	Question Source	Cognitive Level	Question Type	Level
A	N/A	Analysis	New	BOTH

Tier/Group	K/A#	K/A Rating (RO/SRO)	K/A System/Event
T1/G2	009EA1.10	3.8*/3.9*	Small Break LOCA

K/A Statement condition
EA1-Ability to operate and monitor the following as they apply to a small break LOCA: (CFR 41.7/45.5/45.6)

K/A Statement
EA1.10-Safety parameter display system

Reference	Provided Reference	Objective
Mitigating Reactor Core Damage Page 6-1, IPEOP F-0.1	IPEOP F-0.1	E010010501A02

Objective Statement
WHILE RESPONDING TO A LOSS OF REACTOR OR SECONDARY COOLANT, IMPLEMENT THE E-1 QRF.

Explanation
Option A is correct because voiding in the core has allowed an increased leakage of neutrons thus causing Intermediate range channels to show varying positive startup rates where a positive SUR is an input to the CSF for an ORANGE condition. Option B in incorrect because a solid YELLOW would need less than –0.2 DPM SUR intermittent SUR caused by voiding would not cause a solid YELLOW condition. Option C is incorrect because RED input is power range greater than 5% which would not result from increased neutron leakage caused by voiding. Option D is incorrect because voiding would case intermittent SUR not sustained which is needed for a solid ORANGE indication.

Comments
Reviewed by dtb 3/28-Validated 3/26

Record Number
079

QUESTION

Which ONE (1) of the following statements explains the importance of a secondary heat sink as it relates to a Loss of Coolant Accident?

A. In response to a small break LOCA, a secondary heat sink is vital for RCS heat removal during the natural circulation phase but it is NOT important during the reflux boiling phase.
B. In response to a small break LOCA, a secondary heat sink is vital for RCS heat removal during the natural circulation phase and during the reflux boiling phase.
C. In response to a large break LOCA, a secondary heat sink is vital for RCS heat removal during the natural circulation phase but it is NOT important during the reflux boiling phase.
D. In response to a large break LOCA, a secondary heat sink is vital for RCS heat removal during the natural circulation phase and during the reflux boiling phase.

Answer	Question Source	Cognitive Level	Question Type	Level
B	N/A	Comprehension	New	BOTH

Tier/Group	K/A#	K/A Rating (RO/SRO)	K/A System/Event
T1/G2	011EK1.01	4.1/4.4	Large Break LOCA

K/A Statement condition
EK1-Knowledge of the operational implications of the following concepts as they apply to the Large Break LOCA: (CFR 41.8/41.10/45.3)

K/A Statement
EK1.01-Natural circulation and cooling, including reflux boiling

Reference	Provided Reference	Objective
FR-H.1Background Document, E-1Background Document	NONE	FRH0010501K04

Objective Statement
GIVEN A LOSS OF SECONDARY HEAT SINK, EXPLAIN THE BASIS FOR ACTIONS TAKEN PER FR-H.1 BACKGROUND DOCUMENT.

Explanation
Choices A & B-The background document for E-1 explains that the secondary heat sink is vital for removing RCS heat following a small loss of coolant during both the natural circulation and the reflux boiling stages. Choice A is incorrect as it excludes reflux boiling. Choices C & D-The background document for FR-H.1 explains that for a large LOCA the secondary heat sink is not required since the RCS heat is being removed by the break flow.

Comments
Reviewed by dtb 3/28-Validated 3/26

Record Number
080

QUESTION

Tripping the RXCPs when RXCP trip criteria are satisfied is most important in response to a:

A. Small LOCA due to the potential for core uncovery and fuel heatup if the RXCPs were subsequently tripped.
B. Large LOCA due to the potential for core uncovery and fuel heatup if the RXCPs were subsequently tripped.
C. Small LOCA due to the excessive amount of heat that the RXCPs add to the RCS which then must be removed in addition to the decay heat.
D. Large LOCA due to the excessive amount of heat that the RXCPs add to the RCS which then must be removed in addition to the decay heat.

Answer	Question Source	Cognitive Level	Question Type	Level
A	N/A	Memory	New	BOTH

Tier/Group	K/A#	K/A Rating (RO/SRO)	K/A System/Event
T1/G2	011EK2.02	2.6*/2.7*	Large Break LOCA

K/A Statement condition
EK2-Knowledge of the interrelations between the and the following Large Break LOCA: (CFR 41.7/45.7)

K/A Statement
EK2.02 – Pumps

Reference	Provided Reference	Objective
E-1 Background Document	NONE	E010010501K04

Objective Statement
GIVEN A LOSS OF REACTOR OR SECONDARY COOLANT, EXPLAIN THE BASIS FOR ACTIONS TAKEN, PER E-1 BACKGROUND DOCUMENT

Explanation
Choice A-If the RXCPs are not tripped when trip criteria are satisfied, the depletion of inventory is increased. If the RXCPs subsequently tripped, e.g. loss of power, the collapse of the voids could lead to a significant core uncovery and fuel heatup. Choice B-Although the core may uncover during a large LOCA, RCS heat removal is enhanced by the large LOCA so the fuel doesn't heat up as much provided SI flow occurs. Choice C-RXCP operation during a SGTR is actually desirable. Choice D-RXCP operation during a MSLB is actually desirable.

Comments
Reviewed by dtb 3/28-Validated 3/26

Record Number
081

QUESTION

The following Plant conditions exist:

- The plant is in cold shutdown (Shutdown for 3 days) with RHR cooling in progress.
- Pressurizer level is 30% with the RCS intact.
- Both S/G WR levels are 65%.
- The RCS is depressurized.
- Buses 1 and 2 are deenergized for maintenance.

RHR flow is lost and CANNOT be restored. Which ONE (1) of the following methods of cooling will be utilized to remove the core decay heat?

A. Feed S/Gs with AFW and open SG PORV(s) to remove decay heat.
B. Start a RXCP and open S/G PORV(s) to remove decay heat.
C. Maximize charging flow to the RCS and use letdown to remove decay heat.
D. Align an SI pump to inject into the vessel and open a PZR PORV for heat removal.

Answer	Question Source	Cognitive Level	Question Type	Level
A	INPO Exam bank -Prairie Island 6/16/1997	Memory	Direct	BOTH

Tier/Group	K/A#	K/A Rating (RO/SRO)	K/A System/Event
T1/G2	025AK1.01	3.9/4.3	Loss of RHR System

K/A Statement condition
AK1-Knowledge of the operational implications of the following concepts as they apply to Loss of Residual Heat Removal System: (CFR 41.8/41.10/45.3)

K/A Statement
AK1.01-Loss of RHRS during all modes of operation

Reference	Provided Reference	Objective
A-RHR-34	NONE	0340030401A01

Objective Statement
GIVEN A LOSS OF RHR COOLING, RESPOND IN ACCORDANCE WITH A-RHR-34.

Explanation
Choice a-Because the RCS is intact with the S/Gs available this is the preferred method of decay heat removal. Choice b-Although this would normally be the method of choice, the stem stipulates that buses 1 and 2 are not available so the RXCPs cannot be started. Choice c-This method will not provide adequate core cooling. Choice d-This method would be only be used if the RCS was not intact or there was no S/G available.

Comments
Reviewed by dtb 3/28-Validated 3/26

Question #81

QuestionStem
Given the following Unit 1 plant conditions:

oUnit is in cold shutdown (Shutdown for 3 days) with RHR cooling in progress.
oPressurizer level is 30% with the RCS intact.
oBoth SIG WR levels are 65%.
oRCS is depressurized.
oBusses 11 and 12 are deenergized for maintenance.

RHR flow is lost and CANNOT be restored. Which ONE of the following methods of cooling will be utilized to remove the core
decay heat?

Answer Feed SIGs) with AFW and open SIG PORV(s) to remove decay heat.

Distract1 Start a RCP and open S/G PORV(s) to remove decay heat.

Distract2 Maximize charging flow to the RCS and use letdown to remove decay heat.

Distract3 Align an SI pump to inject into the vessel and open a PZR PORV for heat removal.

QuestionComment

CognitiveLevel **RefMaterial**

N

ExamDate 06/16/1997

AbbrevLocName	KaNumber	KaSegment1	KaSegment2	KaSegment3	KaSegment4	KaSegment5	KaRevision
Prairie Island 1	..000025.K1.0		000025	K1	01		1

Record Number
082

QUESTION

The following Plant conditions exist:

- The crew is initiating Emergency Boration in response to an ATWS.
- RCS pressure is 2335 psig.
- CVC-11, Charging Line Isolation, has failed CLOSED.

Which of the following actions would maximize negative reactivity and minimize the addition of positive reactivity being added to the RCS?

A. Place Steam Dump Controller to Manual and open the steam dumps.
B. Raise AFW flow to 500 gpm and fill all Steam Generators to 5% narrow range level.
C. Verify Pressurizer PORV Block valve OPEN and VERIFY/OPEN a Pressurizer PORV.
D. LOWER Charging flows to 40 gpm and RAISE Letdown flow to 80 gpm by placing TWO (2) Letdown Orifices in service.

Answer	Question Source	Cognitive Level	Question Type	Level
C	INPO Exam Bank-Beaver Valley 2 08/17/1998	Comprehension	Direct	BOTH

Tier/Group	K/A#	K/A Rating (RO/SRO)	K/A System/Event
T1/G2	029EK1.03	3.6/3.8	Anticipated Transient w/o Scram

K/A Statement condition
EK1-Knowledge of the operational implications of the following concepts as they apply to the ATWS: (CFR 41.8/41.10/45.3)

K/A Statement
EK1.03-Effects of boron on reactivity

Reference	Provided Reference	Objective
FR-S.1 Background Document	NONE	FRS0020501K04

Objective Statement
GIVEN A NUCLEAR GENERATION/ATWS CONDITION, EXPLAIN THE BASIS FOR ACTIONS TAKEN, PER FR-S.1 BACKGROUND DOCUMENT.

Explanation
Per FR-S.1 Background Document, Step 6, the contingency action is to depressurize the RCS to increase boron injection. Option A and B would result in additional cooling

Comments
Reviewed by dtb 3/28-Validated 3/26

Question #82

QuestionStem

The crew has initiated emergency boration in response to an ATWS. RCS pressure is 2335 psig.

Which of the following actions would maximize negative reactivity and minimize the addition of positive reactivity being added to the RCS?

Answer Verify Pressurizer PORV motor isolation valve open and verify/open a Pressurizer PORV.

Distract1 Raise AFW flow to 700 gpm and fill all steam generators to 5% narrow range level.

Distract2 Lower charging flows to 40 gpm and raise letdown flow to 120 gpm by placing two letdown orifices in service.

Distract3 Place Steam Dump Controller to Manual and open the steam dumps.

QuestionComment

CognitiveLevel N **RefMaterial**

ExamDate 08/17/1998

AbbrevLocName	KaNumber	KaSegment1	KaSegment2	KaSegment3	KaSegment4	KaSegment5	KaRevision
Beaver Valley 2	..029.K1.03		029	K1	03		

Record Number
083

QUESTION

The following Plant conditions exist:

- Reactor power is 100%
- Reactor Trip Breaker testing is being performed with Reactor Trip Bypass Breaker A (52/BYA) RACKED IN and CLOSED
- BOTH Reactor Trip Breakers (52/RTA and 52/RTB) are CLOSED
- Then the Electrician RACKS IN and CLOSES Reactor Trip Bypass Breaker B (52/BYB)
- Breakers 52/RTB and 52/BYA OPEN

Which of the following describes the response to this condition?

The reactor is...

A. NOT tripped, and the NCO should manually trip the reactor.
B. NOT tripped as this is the expected response when 52/BYB was closed.
C. tripped and the NCO should direct the NAO to locally open both 52/RTB and 52/BYB.
D. tripped and the NCO should manually trip the reactor as directed by E-0 "Reactor Trip Or Safety Injection".

Answer	Question Source	Cognitive Level	Question Type	Level
A	Previous Exam-12/2000	Comprehension	Direct	BOTH

Tier/Group	K/A#	K/A Rating (RO/SRO)	K/A System/Event
T1/G2	029EK2.06	2.9*/3.1*	Anticipated Transient w/o Scram

K/A Statement condition
EK2-Knowledge of the interrelations between the and the following an ATWS: (CFR 41.7/45.7)

K/A Statement
EK2.06-Breakers, relays, and disconnects

Reference	Provided Reference	Objective
System Description 47, XK100-144	NONE	0470000001K05

Objective Statement
DISCUSS THE DESIGN CHARACTERISTICS OF THE REACTOR CONTROL & PROTECTION SYSTEM FOR ANY MODE OF OPERATION PER SYSTEM DESCRIPTION 47 AND USAR SECTIONS 1.3, 1.8, 4.1, 4.2, 7.2, 7.5.3, 14.1 AND 14.2.

Explanation
If a second bypass breaker is taken to close with the other bypass breaker already closed, a signal is generated to open both bypass breakers. So both BYA and BYB should have opened. Normally when RTB opens the reactor will trip. However, if its associated bypass breaker (BYB) is (remains) closed, the reactor will NOT trip. BYB should have opened and with RTB opened, a reactor trip should have occurred, and now should be manually actuated (due to RPS failure). B)-Response is NOT as expected since BYB should have opened. C) & D)-The reactor is not tripped if BYB and RTA remain closed. The operators would have manually actuated a trip if any trip breaker had NOT opened during a trip. No action is directed for the NAO, although on an ATWS condition he would be directed locally trip the breakers.

Comments
Reviewed by dtb 3/28-Validated 3/26

Question #83

Question

Given the following conditions:

- Reactor power is 100%
- Reactor trip breaker testing is being performed with Reactor Trip Bypass Breaker A (52/BYA) racked in and closed
- Both Reactor Trip Breakers (52/RTA and 52/RTB) are closed
- The NAO racks in and closes Reactor Trip Bypass Breaker B (52/BYB)
- Breakers 52/RTB and 52/BYA open

Which of the following describes the response to this condition?

The reactor is...

a. NOT tripped, and the NCO should manually trip the reactor.

b. NOT tripped as this is the expected response when 52/BYB was closed.

c. tripped and the NCO should direct the NAO to locally open both 52/RTB and 52/BYB.

d. tripped and the NCO should manually trip the reactor as directed by E-0 "Reactor Trip Or Safety Injection".

Answer a

Exam Level B **Cognitive Level** Comprehension **Facility:**Kewaunee **ExamDate:** 12/11/00

Record Number: 98 **RO Number:** 79 **SRO Number:** 73

Tier: Emergency and Abnormal Plant Evolutions **RO Group:** 2 **SRO Group:** 1

029 Anticipated Transient Without Scram (ATWS)

AK2. Knowledge of the interrelations between the ATWS and the following:

AK2.06 Breakers, relays, and disconnects 2.9 3.1

Explanation of Answer

If a second bypass breaker is taken to close with the other bypass breaker already closed, a signal is generated to open both bypass breakers. So both BYA and BYB should have opened. Normally when RTB opens the reactor will trip. However, if its associated bypass breaker (BYB) is (remains) closed, the reactor will NOT trip. BYB should have opened and with RTB opened, a reactor trip should have occurred, and now should be manually actuated (due to RPS failure). B) - Response is NOT as expected since BYB should have opened. C) & D) - The reactor is not tripped if BYB and RTA remain closed. The operators would have manually actuated a trip if any trip breaker had NOT opened during a trip. No action is directed for the NAO, although on an ATWS condition he would be directed locally trip the breakers.

Reference Title	Facility Reference Number	Section	Page	Revision	L. O.
System Description - Reactor Protection & RCS Temperature Instruments (RCP)	Number 47	3.13.4	47-39	Orig	
Logic diagram - Rector Trip Signals		XK100-144		5C	

Material Required for Examination

Facility Objective(s)

0470000001K02 - Explain the response to the operation of all Reactor Control & Protection system controls in accordance with Logic Diagrams/Schematics...

0470000001K05 - Discuss the design characteristics of the Reactor Control & Protection system for any mode of operation per System Description 47 and USAR sections 1.3, 1.8, 4.1, 4.2, 7.2, 7.5.3, 14.1 and 14.2.

Question Source: New **Question Modification Method:**

Question Source Comments:

Record Number
084

QUESTION

Which ONE (1) of the following is the expected plant response to a failure of Instrument Bus I, BRA-113, if the reactor is operating at 10E3 cps?

A. Immediate automatic reactor trip.
B. NO immediate concern, dispatch electrician to investigate.
C. A rod stop would occur and by-passing the affected NI channel would be required.
D. Manual control of affected equipment would be required to prevent a reactor trip.

Answer	Question Source	Cognitive Level	Question Type	Level
A	Facility Exam Bank-048ADV004	Comprehension	Direct	BOTH

Tier/Group	K/A#	K/A Rating (RO/SRO)	K/A System/Event
T1/G2	032AK1.01	2.5/3.1	Loss of Source Range NI

K/A Statement condition
AK1-Knowledge of the operational implications of the following concepts as they apply to Loss of Source Range Nuclear Instrumentation: (CFR 41.8/41.10/45.3)

K/A Statement
AK1.01-Effects of voltage changes on performance

Reference	Provided Reference	Objective
System Description 48, page 3	NONE	0480000001K02

Objective Statement
DISCUSS THE DESIGN CHARACTERISTICS OF THE NUCLEAR INSTRUMENTATION SYSTEM, FOR ANY MODE OF OPERATION, PER SYSTEM DESCRIPTION 048 AND USAR SECTIONS 7.2 AND 7.4.

Explanation
When power is lost to Instrument Bus I, N-31 and N35 are de-energize. Source and Intermediate Range trip on a 1 of 2 logic. The protective signal is a loss of power to Reactor Protection, thus de-energizing N-31 or N-35 would result in a reactor trip. Option B is incorrect because a reactor trip signal would be generated but would be correct if it were Instrument Bus III or 4. Option C is incorrect because the reactor trip is generated but would be the correct action if power is above 10%. Option D is incorrect because the reactor trip signal.

Comments
Reviewed by dtb 3/28-Validated 3/26

048ADV004;

Which ONE (1) of the following is the expected plant response to a failure Of Instrument Bus 1, BRA-113, if the reactor is operating at 5% power?

a. Immediate automatic reactor trip.

b. NO immediate concern, dispatch electrician to investigate.

c. Immediate automatic reactor trip and safety injection.

d. Manual control of various control systems required to prevent reactor trip.

ANSWER:

a

TIME ELEMENT: 2 Minutes POINTS: 1.0

REFERENCES:

1) System Description Chapter 48, SECT 3.5, REV B

USE OF REFERENCES EXPECTED: NO KNPP SYSTEM NUMBER: 048

OBJECTIVE NUMBER: TASK NUMBER: 0480040101

K/A NUMBER: 015020SG15 K/A RATING: 3.3/4.3

STATIC SIMULATOR CONDITIONS: N/A ASSOCIATED JPM: N/A

QUALIFICATION LEVEL: RO/SRO REV: A

Record Number
085

QUESTION

The following Plant conditions exist:

- Plant Startup is in progress.
- Intermediate Range N-35 is OUT-OF-SERVICE.
- Reactor power is at 4%.
- The power supply for the N-36 detector failure occurs reducing detector voltage by 50%.

What Operator action shall be taken?

A. Maintain present Plant conditions until one of the Intermediate Range Instruments is returned to service.
B. Shutdown the Reactor per OP N-CRD-49C, "Reactor Shutdown", and maintain HOT SHUTDOWN conditions.
C. Trip the Reactor and perform IPEOP E-0, "Reactor Trip or Safety Injection".
D. Continue the Plant Startup and bypass N-36.

Answer	Question Source	Cognitive Level	Question Type	Level
B	Facility Exam Bank-000033011G01	Comprehension	Direct	BOTH

Tier/Group	K/A#	K/A Rating (RO/SRO)	K/A System/Event
T1/G2	033AK1.01	2.7/3.0	Loss of Intermediate Range NI

K/A Statement condition
AK1-Knowledge of the operational implications of the following concepts as they apply to Loss of Intermediate Range Nuclear Instrumentation: CFR 41.8/41.10/45.3)

K/A Statement
AK1.01-Effects of voltage changes on performance

Reference	Provided Reference	Objective
A-NI-48, System Description 48	NONE	0480000001K02

Objective Statement
DISCUSS THE DESIGN CHARACTERISTICS OF THE NUCLEAR INSTRUMENTATION SYSTEM, FOR ANY MODE OF OPERATION, PER SYSTEM DESCRIPTION 048 AND USAR SECTIONS 7.2 AND 7.4.

Explanation
On a reduction of instrument power, the fission chamber will not collect as many fission products. This would give a low failure to N-36. Per procedure, when below P-10 (10%) and have lost both Intermediate Range channels, you shutdown and remain in Hot Shutdown. Option A is incorrect as procedure directs a shutdown. Option C is incorrect because a Reactor trip signal is not generated but would be correct for a high failure. Option D is incorrect due to procedural direction but would be correct above P-10.

Comments
Reviewed by dtb 3/28-Validated 3/26

Question #85
000033011G01;

The following Plant conditions exist:

- Plant Startup is in progress.
- Intermediate Range N-35 is OUT-OF-SERVICE.
- Reactor power is at 4%.

Intermediate Range N-36 has just failed low. What Operator action shall be taken?

a. Maintain present Plant conditions until one of the Intermediate Range Instruments is returned to service.

b. Shutdown the Reactor per OP N-CRD-49C, "Reactor Shutdown", and maintain HOT SHUTDOWN conditions.

c. Trip the Reactor and perform IPEOP E-0, "Reactor Trip or Safety Injection".

d. Continue the Plant Startup and bypass N-36.

ANSWER:

b.

TIME ELEMENT: 3 Minutes POINTS: 1.00

REFERENCES:

1) OP A-NI-48, Rev. R

USE OF REFERENCES EXPECTED: YES KNPP SYSTEM NUMBER: 48

QUALIFICATION LEVEL: RO/SRO REV: d

0470000001 K02 Explain the response to the operation of all Reactor Control & Protection system controls in accordance with Logic Diagrams/Schematics E2042, E2043, E2044, E2051-1, E2051-2, XK100-144, XK100-147 through XK100-150, XK100-546 through XK100-559.

0480040401 A02 Respond to the failure of Intermediate RangeInstrumentation, given failure of both channels, in accordance with A-NI-48.

For 033ak1.01 – change to power supply failure low .

Record Number
086

QUESTION

During which ONE (1) of the following conditions is ES-0.0, "Rediagnosis", approved for use based on operator judgment?

A. After transition to E-3, "Steam Generator Tube Rupture."
B. During the performance of ES-0.2, "Natural Recirculation Cooldown", due to loss of offsite power when a twenty (20) gpm Steam Generator tube leak is detected.
C. During the performance of E-1, "Loss of Reactor or Secondary Coolant", when a RED path is detected in Heat Sink.
D. After transition to ES-0.1, "Reactor Trip Recovery", following an inadvertent reactor trip.

Answer	Question Source	Cognitive Level	Question Type	Level
A	Facility Exam Bank-E00ADV061	Memory	Direct	RO

Tier/Group	K/A#	K/A Rating (RO/SRO)	K/A System/Event
T1/G2	E01 2.1.23	3.9/4.0	Rediagnosis

K/A Statement condition
2.1-Conduct of Operations

K/A Statement
2.1.23-Ability to perform specific system and integrated plant procedures during all modes of plant operation.

Reference	Provided Reference	Objective
ES-0.0	NONE	E000030501K02

Objective Statement
EXPLAIN THE APPLICABILITY AND ENTRY CONDITIONS OF ES-0.0, REDIAGNOSIS.

Explanation
ES-0.0 entry is based on operator judgment after a Safety Injection actuation. Entry into E-3 would mean a Safety Injection had occurred. Option B and D are incorrect because a Safety Injection actuation would not be generated. Option C is incorrect because CSF have priority over ES-0.0.

Comments
Reviewed by dtb 3/28-Validated 3/26

Question #86
E00ADV061;

During which ONE (1) of the following conditions is ES-0.0, "Rediagnosis," approved for use based on operator judgement?

a. After transition to ES-3, "Steam Generator Tube Rupture."

b. During the performance of ES-0.2, "Natural Recirculation Cooldown," due to loss of offsite power when a twenty (20) gpm Steam Generator tube leak is detected.

c. During the performance of E-1, "Loss of Reactor or Secondary Coolant," when a RED path is detected in Heat Sink.

d. After transition to ES-0.1, "Reactor Trip Recovery," following an inadvertent reactor trip.

ANSWER:

a

TIME ELEMENT: 2 Minutes POINTS: 1.0

REFERENCES:

1) ES-0.0, Rev. F

USE OF REFERENCES EXPECTED: NO KNPP SYSTEM NUMBER: E00

OBJECTIVE NUMBER: E000030501K02 TASK NUMBER:

K/A NUMBER: K/A RATING:

STATIC SIMULATOR CONDITIONS: N/A ASSOCIATED JPM: N/A

QUALIFICATION LEVEL: RO/SRO REV: ORIG

For E01 2.1.23

Record Number
087

QUESTION

Why is SI-5A/MV-32107, SI Pump A Suction Isolation valve, closed prior to opening RHR-299A/MV-32134, Residual Heat Exchanger Outlet to Safety Injection Pump A valve, during the recirculation phase of a LOCA?

A. Reduces system pressure to the SI Pump suction header resulting in increased SI flow due to decreased RHR Pump NPSH requirement.
B. Prevents tripping of the SI pumps on high discharge flow rate resulting from increased SI Pump recirculation flow.
C. Protects the SI Pump discharge header from overpressurization if the RHR pump was aligned to the RCS hot leg.
D. Prevents the RHR Pump from recirculating contaminated Sump water directly to the RWST.

Answer	Question Source	Cognitive Level	Question Type	Level
D	Previous exam-12/2000	Memory	Direct	BOTH

Tier/Group	K/A#	K/A Rating (RO/SRO)	K/A System/Event
T1/G2	E03EK2.1	3.6/4.0	LOCA Cooldown and Depressurization

K/A Statement condition
EK2-Knowledge of the interrelations between the (LOCA Cooldown and Depressurization) and the following: (CFR 41.7/45.7)

K/A Statement
EK2.1-Components, and functions of control and safety systems, including instrumentation, signals, interlocks, failure modes, and automatic and manual features

Reference	Provided Reference	Objective
System Description 33, E2032	NONE	0330000001K04

Objective Statement
EXPLAIN THE RESPONSE TO THE OPERATION OF ALL SAFETY INJECTION SYSTEM CONTROLS IN ACCORDANCE WITH LOGIC DIAGRAMS/SCHEMATICS E1635, E2032, E2033, E2034, E2035, XK100-148 AND XK100-150.

Explanation
TWO interlocks must be met to open RHR-299A(B). 1) The associated SI pump suction valve (SI-5A(B)) must be closed to prevent pumping the contaminated sump water directly to the RWST with the RHR pump via the SI suction piping. 2) The associated RHR Pump discharge pressure (PT-628(629)) must be less than 210 psig to protect the SI suction piping from overpressure. A)-This action is NOT expected to reduce system pressure, but will increase SI Pump suction pressure (compared to the condition if it SI-5A were to remain open). Has no effect on RHR Pump NPSH. B)-Leaving the valve open will NOT increase SI recirculation flow, but may have the opposite effect as suction head at the SI Pumps may be reduced. C)-This is a valid reason for the RHR discharge pressure interlock which also feeds into RHR-299A(B).

Comments
Reviewed by dtb 3/28-Validated 3/26

Question #87

Question

Why is SI-5A/MV-32107, SI Pump A Suction Isolation valve, closed prior to opening RHR-299A/MV-32134, Residual Heat Exchanger Outlet to Safety Injection Pump 1A valve, during the recirculation phase of a LOCA?

a. Reduces system pressure to the SI Pump suction header resulting increased SI flow due to decreased RHR Pump NPSH requirement.

b. Prevents tripping of the SI pumps on high discharge flow rate resulting from increased SI Pump recirculation flow.

c. Protects the SI Pump suction header from overpressurization if the RHR pump was aligned to the RCS hot leg.

d. Prevents the RHR Pump from recirculating contaminated Sump water directly to the RWST.

Answer d

Exam Level B **Cognitive Level** Memory **Facility:** Kewaunee

Record Number: 119 **RO Number:** 94 **SRO Number:** 90

Tier: Emergency and Abnormal Plant Evolutions **RO Group:** 2 **SRO Group:** 2

E03 LOCA Cooldown and Depressurization

EK2. Knowledge of the interrelations between the LOCA Cooldown and Depressurization and the following:

EK2.1 Components, and functions of control and safety systems, including instrumentation, signals, interlocks, failure modes, and automatic and manual features. 3.6 4.0

Explanation of Answer

TWO interlocks must be met to open RHR-299A(B). 1) The associated SI pump suction valve (SI-5A(B)) must be closed to prevent pumping the contaminated sump water directly to the RWST with the RHR pump via the SI suction piping. 2) The associated RHR Pump discharge pressure (PT-628(629)) must be less than 210 psig to protect the SI suction piping from overpressure. A) - This action is NOT expected to reduce system pressure, but will increase SI Pump suction pressure (compared to the condition if it SI-5A were to remain open). Has no effect on RHR Pump NPSH. B) - Leaving the valve open will NOT increase SI recirculation flow, but may have the opposite effect as suction head at the SI Pumps may be reduced. C) - This is a valid reason for the RHR discharge pressure interlock which also feeds into RHR-299A(B).

Reference Title	Facility Reference Number	Section	Page	Revision	L. O.
System Description - Safety Injection (SI)	Number 33	3.8	33-20	C	
Integrated Logic - SIS	E-2032			U	

Material Required for Examination

Facility Objective(s)

0330000001K04 - EXPLAIN THE RESPONSE TO THE OPERATION OF ALL SAFETY INJECTION SYSTEM CONTROLS IN ACCORDANCE WITH LOGIC DIAGRAMS/SCHEMATICS E1635, E2032, E2033, E2034, E2035, XK100-148 AND XK100-150.

Question Source: Facility Exam Bank **Question Modification Method:** Editorially Modified

Question Source Comments: Question # 023STAT000. Changed one selection to include reason for the other interlock for valve. Changed wording to simplify.

FROM PREVIOUS EXAM.

Record Number
088

QUESTION

The plant is at 100% power with following equipment out of service:

- Turbine Drive AFW pump
- Safety Injection pump "A"

A small break LOCA occurs resulting in a reactor trip and safety injection. The crew is using E-0, Reactor Trip or Safety Injection, and the following
conditions are noted.

- A bus lockout occurred on bus 6
- Flow from AFW pump "A" is 100 gpm and CANNOT be increased
- CNTMT pressure is 8 psig
- CETs are reading 690°F

To which ONE (1) of the following procedures should the crew transition when leaving E-0?

A. E-1, Loss of Reactor or Secondary Coolant, to mitigate the LOCA.
B. FR-H.1, Response to Loss of Secondary Heat Sink, to restore the heat sink.
C. FR-C.2, Response to Degraded Core Cooling, to reestablish core cooling.
D. ECA-0.0, Loss of All AC Power, to restore power to bus 6.

Answer	Question Source	Cognitive Level	Question Type	Level
B	N/A	Comprehension	New	RO

Tier/Group	K/A#	K/A Rating (RO/SRO)	K/A System/Event
T1/G2	E05EA2.1	3.4/4.4	Loss of Secondary Heat Sink

K/A Statement condition
EA2-Ability to determine and interpret the following as they apply to the (Loss of Secondary Heat Sink) (CFR 43.5/45.13)

K/A Statement
EA2.1-Facility conditions and selection of appropriate procedures during abnormal and emergency operations

Reference	Provided Reference	Objective
E-0	NONE	E000020501K09

Objective Statement
IDENTIFY THE CONDITIONS WHICH WOULD REQUIRE A PROCEDURAL TRANSITION, WHILE RESPONDING TO A REACTOR TRIP, IN ACCORDANCE WITH E-0.

Explanation
Choice A-This would be the procedure to go to had all the equipment been operable but the stem provides several pieces of equipment that are not available. Choice B-Based on the information given in the stem total AFW flow is only 100 gpm and S/G level would still be off-scale low on the narrow range. Choice C-Although entry conditions exist for FR-C.2 it would be an orange path and FR-H.1 is a red path so the red path needs to be performed first. Choice D-ECA-0.0 is only entered if power is lost to both safeguards buses.

Comments
Reviewed by dtb 3/28-Validated 3/26

Record Number
089

QUESTION

Following a LOCA the crew is using ECA-1.1, Loss of Emergency Coolant Recirculation, because both trains of recirculation have become unavailable. Safety Injection Pump B was stopped as required by the procedure. The crew is now evaluating the plant conditions to determine if SI flow can be terminated. The requirement to terminate SI is 80°F subcooling. The current subcooling is 68°F.

What action, if any, should be taken in response to this information?

A. NO action should be taken until subcooling increases to 80°F at which point Safety Injection Pump A should be stopped.
B. Locally throttle SI-7A, SI Pump Discharge Isolation Valve, to the flow rate determined to be adequate by using the table ECA-1.1-1, Required SI Flow Rate vs. Time After Trip.
C. Manually shut SI-9A, SI to RCS Cold Legs until subcooling drops to 30°F then reopen SI-9A.
D. Manually restart Safety Injection Pump B.

Answer	Question Source	Cognitive Level	Question Type	Level
B	N/A	Comprehension	New	BOTH

Tier/Group	K/A#	K/A Rating (RO/SRO)	K/A System/Event
T1/G2	E11EK2.2	3.9/4.3	Loss of Emergency Coolant Recirculation

K/A Statement condition
EK2-Knowledge of the interrelations between the (Loss of Emergency Coolant Recirculation) and the following: (CFR 41.7/45.7)

K/A Statement
EK2.2-Facility's heat removal systems, including primary coolant, emergency coolant, the decay heat removal systems, and relations between the proper operation of these systems to the operation of the facility

Reference	Provided Reference	Objective
ECA-1.1	NONE	E010050501A01

Objective Statement
GIVEN A LOSS OF EMERGENCY COOLANT RECIRCULATION CONDITION, RESPOND IN ACCORDANCE WITH ECA-1.1.

Explanation
Choice a-This is a continuous action step, so therefore this action should be taken when the subcooling increases, but the SI valve should be throttled in the interim. Choice b-The contingency action for inadequate subcooling at step 14 of ECA-1.1 is to locally throttle SI-7A. Choice c-The intent of this procedure is to ensure that there is adequate subcooling before stopping SI flow, which is what this choice would do. Choice d-This would run counter to the intent of the procedure because we are trying to reduce RWST usage and this choice would increase it.

Comments
Reviewed by dtb 3/28-Validated 3/26

Record Number
090

QUESTION

The following Plant conditions exist:

- A LOCA has occurred
- The crew is performing cooldown as directed by ES-1.2 "Post LOCA Cooldown And Depressurization"
- ECCS Pumps are still operating in injection phase
- The ICS system has been stopped
- TWO Containment Cooling Fan Coil Units are running
- Containment pressure is stable at 2.2 psig
- The CRS transitions to FR-Z.3 "Response to High Containment Radiation Level" in response to a YELLOW path condition

What action does the CRS direct in FR-Z.3 in order to reduce Containment radiation levels?

A. The idle Containment Cooling Fan Coil Units are started.
B. A RHR Pump is started and aligned to supply the associated ICS header.
C. An ICS Pump is started and its associated discharge isolation valves are opened.
D. ONE train of venting and filtering Containment atmosphere through Shield Building Vent is initiated.

Answer	Question Source	Cognitive Level	Question Type	Level
A	Previous Exam-12/2000	Memory	Direct	BOTH

Tier/Group	K/A#	K/A Rating (RO/SRO)	K/A System/Event
T1/G2	E16EK3.3	3.0/3.0	High Containment Radiation

K/A Statement condition
EK3-Knowledge of the reasons for the following responses as they apply to the (High Containment Radiation) (CFR 41.5/41.10, 45.6, 45.13)

K/A Statement
EK3.3-Manipulation of controls required to obtain desired operating results during abnormal, and emergency situations

Reference	Provided Reference	Objective
FR-Z.3, FR-Z.3 Background Document	NONE	FRZ0030501K01

Objective Statement
FRZ0030501K01- GIVEN A CONTAINMENT HIGH RADIATION LEVEL CONDITION, EXPLAIN THE BASIS FOR ACTIONS TAKEN PER FR-Z.3 BACKGROUND DOCUMENT.

Explanation
Step 2 of FR-Z.3 verifies Containment cooling operation. The Units are operated in an attempt to provide some filtration of Containment atmosphere (remove of radioactive particulates). B)-The alignment of RHR is performed in FR-Z.1 "Response to High Containment Pressure" in the event that neither ICS Pump can be started. This option may be considered an alternative to action A) since the ICS Pumps have been stopped (and RHR Pump status is NOT specified); however, as in A), this operation is NOT warranted and its use is NOT directed in this situation. C)-This the correct action for initiating Containment spray; however, ICS operation is NOT warranted and its use is NOT directed in this situation. D)-This action may be performed for hydrogen control as directed in N-RBV-18C "Post LOCA Hydrogen Control" but is NOT a acceptable method for radiation reduction since this involves a release.

Comments
Reviewed by dtb 3/28-Validated 3/26

Question #90

Question

Given the following conditions:

- A LOCA has occurred
- The crew is performing cooldown as directed by ES-1.2 " Post LOCA Cooldown And Depressurization"
- ECCS Pumps are still operating in injection phase
- The ICS system has been stopped
- TWO Containment Cooling Fan Coil Units are running
- Containment pressure is stable at 2.2 psig
- The CRS transitions to FR-Z.3 "Response to High Containment Radiation Level" in response to a YELLOW path condition

What action does the CRS direct in FR-Z.3 in order to reduce containment radiation levels?

a. The idle Containment Cooling Fan Coil Units are started.

b. A RHR Pump is started and aligned to supply the associated ICS header.

c. An ICS Pump is started and its associated discharge isolation valves are opened.

d. ONE train of venting and filtering containment atmosphere through Shield Building Vent is initiated.

Answer a

Exam Level B **Cognitive Level** Memory **Facility:** Kewaunee **ExamDate:** 12/11/00

Record Number: 129 **RO Number:** 100 **SRO Number:** 100

Tier: Emergency and Abnormal Plant Evolutions **RO Group:** 2 **SRO Group:** 2

E16 High Containment Radiation

EK3. Knowledge of the reasons for the following responses as they apply to the High Containment Radiation:

EK3.3 Manipulation of controls required to obtain desired operating results during abnormal, and emergency situations. 3.0 3.0

Explanation of Answer

Step 2 of FR-Z.3 verifies containment cooling operation. The Units are operated in an attempt to provide some filtration of containment atmosphere (remove of radioactive particulates). B) - The alignment of RHR is performed in FR-Z.1 "Response To High Containment Pressure" in the event that neither ICS Pump can be started. This option may be considered an alternative to action A) since the ICS Pumps have been stopped (and RHR Pump status is NOT specified); however, as in A), this operation is NOT warranted and its use is NOT directed in this situation. C) - This the correct action for initiating containment spray; however, ICS operation is NOT warranted and its use is NOT directed in this situation. D) - This action may be performed for hydrogen control as directed in N-RBV-18C "Post LOCA Hydrogen Control" but is NOT a acceptable method for radiation reduction since this involves a release.

Reference Title	Facility Reference Number	Section	Page	Revision	L. O.
Response to High Containment Radiation Level	FR-Z.3	Step 2	2	F	
PLANT SPECIFIC BACKGROUND INFORMATION FOR KNPP IPEOP FR-Z.3	FR-Z.3	4, Step 3	6A	C	

Material Required for Examination

Facility Objective(s)

FRZ0030501K01- GIVEN A CONTAINMENT HIGH RADIATION LEVEL CONDITION, EXPLAIN THE BASIS FOR ACTIONS TAKEN PER FR-Z.3 BACKGROUND DOCUMENT.

Question Source: New **Question Modification Method:**

Question Source Comments:

Record Number
091

QUESTION

The Unit is at 100% with all systems in a normal at power lineup when IA-101, Instrument Air to Containment Isolation, is inadvertently CLOSED and NOT RE-OPENED. A small air leak exists in the air header. If air pressure is NOT restored to Containment, which of the following will cause a Reactor Trip? (Assume NO Operator Action)

A. High pressurizer level caused by Letdown isolation
B. Low S/G level caused by S/G Main Feed Reg. Valves closure
C. Low Pressurizer pressure caused by PRZR PORVs opening
D. Main Steam Isolation Valves coming off the open seat (>4°)

Answer	Question Source	Cognitive Level	Question Type	Level
A	INPO Exam Bank-Beaver Valley 8/98	Comprehension	Direct	BOTH

Tier/Group	K/A#	K/A Rating (RO/SRO)	K/A System/Event
T1/G3	065AK3.03	2.9/3.4	Loss of Instrument Air

K/A Statement condition
AK3-Knowledge of the reasons for the following responses as they apply to the Loss of Instrument Air: (CFR 41.5, 41.10/45.6/45.13)

K/A Statement
AK3.03-Knowing effects on plant operation of isolating certain equipment from instrument air

Reference	Provided Reference	Objective
XK100-10	NONE	0010000004K04

Objective Statement
Describe the system arrangement and flow paths which enable the SA and IA System to fulfill its function (i.e., draw a one-line diagram) per M-213-1.

Explanation
When Instrument air is lost to Containment, after the Air Receiver pressure bleeds down, the Letdown Isolation Valves fail closed. This will cause charging to fill the PRZR and eventually cause a Reactor trip. Option B is incorrect because the Main Feed Reg Valves are outside Containment. Option C is incorrect due to PRZR PORV failing closed. Option D is incorrect because MSIVs are outside Containment, however this does initiate a Reactor Trip on a loss of all Instrument air.

Comments
Reviewed by dtb 3/28-Validated 3/26

Question #91

QuestionStem

The Unit is at 100% with all systems NSA. 21AC-PI106A "CNMT Instrument Air Header Pressure" reads 0 psig. If air pressure is not restored to containment, which of the following will cause a reactor trip?

Answer High pressurizer level when Letdown Orifice Inlet valves 2CHS*AOV200A, B and C close.

Distract1 Low SG level when SG Main Feed Reg. valves 2FWS-FCV478, 488 and 498 close.

Distract2 Low Pressurizer pressure when PORV's 2RCS*PCV455A and 455B open.

Distract3 High RCS pressure when Main Steam Isolation Valves 2MSS-AOV101A, B and C close.

QuestionComment

CognitiveLevel **RefMaterial**
N

ExamDate 08/17/1998

AbbrevLocName	KaNumber	KaSegment1	KaSegment2	KaSegment3	KaSegment4	KaSegment5	KaRevision
Beaver Valley 2	..065.K3.03		065	K3	03		

Record Number
092

QUESTION

While executing bleed and feed steps of FR-H.1, the following plant conditions exist:

- S/G A is faulted with NO indicated level on Wide Range Yarway
- S/G B is intact and its Wide Range Yarway reads 7%
- RCS hot leg temperatures are currently 563°F in both loops and decreasing
- Turbine Driven AFW pump was just made available

Which ONE (1) of the following would be the correct actions to take to establish a secondary heat sink?

A. Feed S/G A at less than 100 gpm concurrent with feed and bleed until RCS hot leg temperatures are less than 550°F, and then establish feed to S/G B at less than 100 gpm.
B. Stop the bleed and feed, feed S/G B at less than 100 gpm until RCS hot leg temperatures are less than 550°F and then feed S/G B at maximum rate.
C. Maintain bleed and feed until RCS hot leg temperatures are less than 550°F and then feed S/G B at maximum rate.
D. Maintain bleed and feed and establish Feedwater flow to S/G B, then stop bleed and feed when S/G B narrow range level is greater than 4%.

Answer	Question Source	Cognitive Level	Question Type	Level
D	Facility Exam Bank-FRGADV013	Comprehension	Direct	BOTH

Tier/Group	K/A#	K/A Rating (RO/SRO)	K/A System/Event
T1/G2	E05EA1.1	4.1/4.0	Loss of Secondary Heat Sink

K/A Statement condition
EA1-Ability to operate and/or monitor the following as they apply to the (Loss of Secondary Heat Sink) (CFR 41.7/45.5/45.6)

K/A Statement
EA1.1-Components, and functions of control and safety systems, including instrumentation, signals, interlocks, failure modes, and automatic and manual features

Reference	Provided Reference	Objective
FR-H.1 Background Document	NONE	FRH0010501K04

Objective Statement
GIVEN A LOSS OF SECONDARY HEAT SINK, EXPLAIN THE BASIS FOR ACTIONS TAKEN PER FR-H.1 BACKGROUND DOCUMENT.

Explanation
Per FR-H.1 Background Document, step 24 and 25, Feed and Bleed should be maintained until an adequate heat sink is established. An adequate heat sink is defined as 4% in the narrow range[15% adverse Containment]. Options A, B, and C are incorrect per procedural guidance but include various action for other conditions.

Comments
Reviewed by dtb 3/28-Validated 3/26

FRGADV013;

While executing bleed and feed steps of FR-H.1, the following pertinent plant conditions exist:

1. SG-A is faulted with ÞNOÝ indicated level on Wide Range Yarway
2. SG-B is intact and its Wide Range Yarway reads 7%
3. RCS hot leg temperatures = 563øF in both loops and decreasing
4. Turbine Driven AFW pump was just made available

Which ONE (1) of the following would be the correct actions to take to establish a secondary heat sink?

a. Feed SGA at less than 100 gpm concurrent with feed and bleed until RCS hot leg temperatures are less than 550øF, and then establish feed to SGB at less than 100 gpm.

b. Stop the bleed and feed, feed SGB at less than 100 gpm until RCS hot leg temperatures are less than 550øF and then feed SGB at maximum rate.

c. Maintain bleed and feed until RCS hot leg temperatures are less than 550øF and then feed SGB at maximum rate.

d. Maintain bleed and feed and establish 100 gpm to SGB, then stop bleed and feed when SGB narrow range level is greater than 4% (15% for adverse containment).

ANSWER:

d

TIME ELEMENT: 2 Minutes POINTS: 1.0

REFERENCES:

1) IPEOP Background Document FR-H.1, Rev. I

USE OF REFERENCES EXPECTED: NO KNPP SYSTEM NUMBER: FRH

OBJECTIVE NUMBER: FRH0010501K04 TASK NUMBER: FRH0010501

STATIC SIMULATOR CONDITIONS: N/A ASSOCIATED JPM: N/A

QUALIFICATION LEVEL: RO/SRO REV: C

Record Number
093

QUESTION

Which of the following would require the operator to MANUALLY initiate Containment Evacuation Alarm?

A. N-31 counts increasing by one decade during core alterations.
B. R-30, Rx Cavity C, in alarm.
C. R-21, Containment Vent, failing HIGH.
D. Loss of Refueling Cavity level control.

Answer	Question Source	Cognitive Level	Question Type	Level
D	N/A	Memory	New	RO

Tier/Group	K/A#	K/A Rating (RO/SRO)	K/A System/Event
T1/G3	036AK3.01	3.1/3.7	Fuel Handling Accident

K/A Statement condition
AK3-Knowledge of the reasons for the following responses as they apply to the Fuel Handling Incidents: (CFR 41.5, 41.10/45.6/45.13)

K/A Statement
AK3.01-Different inputs that will cause a reactor building evacuation

Reference	Provided Reference	Objective
E-FH-53B	NONE	0530020501K01

Objective Statement
LIST THE OPERATOR IMMEDIATE ACTIONS, GIVEN A LOSS OF REACTOR CAVITY INVENTORY DURING FUEL MOVEMENT IN ACCORDANCE WITH E-FH-53B.

Explanation
Per E-FH-53B, the Containment evacuation alarm is sounded if Refueling Cavity level is lost. Option A will automatically sound the alarm so manual action should not be required. Option B does not require the initiation of the initiate Containment Evacuation Alarm, only if actual Refueling Cavity level is lost. Option C would provide a symptom for dropped fuel assembly but would not require an initiate Containment Evacuation Alarm.

Comments
Reviewed by dtb 3/28-Validated 3/26

Record Number
094

QUESTION

The following Plant conditions exist:

- The plant is at HOT SHUTDOWN
- A cooldown to COLD SHUTDOWN has been initiated.

What is the difference in staffing requirements for the minimum on-duty shift complement per NAD 3.17, "Shift Operation and Turnover", when COLD SHUTDOWN is achieved?

A. Only ONE Nuclear Control Operator is required and the STA is NOT required.
B. The Control Room Supervisor and the STA are NOT required.
C. The fire response team can be reduced to FOUR persons.
D. Only ONE Nuclear Auxiliary Operator is required.

Answer	Question Source	Cognitive Level	Question Type	Level
B	Previous Exam-12/2000	Memory	Direct	SRO

Tier/Group	K/A#	K/A Rating (RO/SRO)	K/A System/Event
T3	2.1.4	2.3/3.4	GENERIC

K/A Statement condition
2.1-Conduct of Operations

K/A Statement
2.1.4-Knowledge of shift staffing requirements.

Reference	Provided Reference	Objective
NAD 3.17	NONE	1190060302K01

Objective Statement
EXPLAIN THE SHIFT ORGANIZATION DURING ALL PLANT CONDITIONS IN ACCORDANCE WITH NAD 3.17.

Explanation
During COLD SHUTDOWN and REFUELING modes only one SRO (Shift Manager) is required and no STA is required, from the listed on-duty shift compliment. NOTE: The requirements may be reduced by ONE provided a replacement arrives within TWO hours (following the reduction in number). A)-TWO Licensed Operators are required in all MODES, although the STA is not required. C)-The fire response team is required to have FIVE members in all MODES. D)-TWO NAOs are required in all MODES.

Comments
Reviewed by dtb 3/28-Validated 3/26

Question #94

Question

Given the following conditions:

- The plant is at HOT SHUTDOWN
- A cooldown to COLD SHUTDOWN has been initiated.

What is the difference in staffing requirements for the minimum on-duty shift complement per NAD 3.17, "Shift Operation and Turnover," when COLD SHUTDOWN is achieved?

a. Only ONE Nuclear Control Operator is required and the STA is NOT required.

b. The Control Room Supervisor and the STA are NOT required.

c. The fire response team can be reduced to FOUR persons.

d. Only ONE Nuclear Auxiliary Operator is required.

Answer b

Exam Level S **Cognitive Level** Memory **Facility:** Kewaunee

Record Number: 2 **RO Number:** **SRO Number:** 1

Tier: Generic Knowledge and Abilities **RO Group:** 1 **SRO Group:** 1

GENERIC

2.1 Conduct of Operations

2.1.4 Knowledge of shift staffing requirements. 2.3 3.4

Explanation of Answer

During COLD SHUTDOWN and REFUELING modes only one SRO (Shift Supervisor) is required and no STA is required, from the listed on-duty shift compliment. NOTE: The requirements may be reduced by ONE provided a replacement arrives within TWO hours (following the reduction in number). A) - TWO Licensed Operators are required in all MODES, although the STA is not required. C) - The fire response team is required to have FIVE members in all MODES. D) - TWO NAOs are required in all MODES.

Reference Title	Facility Reference Number	Section	Page	Revision L. O.
Shift Operation and Turnover	NAD 3.17	5.1	2-3	C

Material Required for Examination **Number(s)**

Facility Objective(s)

1190060302K01 - Explain the shift organization during all plant conditions in accordance with NAD 3.17.

Question Source: New **Question Modification Method:**

Question Source Comments:

From previous exam

Record Number
095

QUESTION

With the plant operating at full power, an AO reports of an inoperable fire detector. At which ONE (1) of the following locations would it necessitate a fire watch patrol within ONE (1) hour?

A. Safety Injection Pump B
B. RHR Pump A Pit
C. Component Cooling Pump B
D. Control Room

Answer	Question Source	Cognitive Level	Question Type	Level
C	N/A	Memory	New	SRO

Tier/Group	K/A#	K/A Rating (RO/SRO)	K/A System/Event
T1/G1	067AA2.09	2.4/2.7	Plant Fire On-site

K/A Statement condition
AA2-Ability to determine and interpret the following as they apply to the Plant Fire on Site: (CFR 43.5/45.13)

K/A Statement
AA2.09-That a failed fire alarm detector exists

Reference	Provided Reference	Objective
Fire Protection Program Plan Appendix B	NONE	1190110301A01

Objective Statement
RECOGNIZE PLANT CONDITIONS THAT ARE ADDRESSED IN TECHNICAL SPECIFICATIONS AND LOCATE THE APPLICABLE INFORMATION.

Explanation
Choice a-The SI pumps area is monitored by 4 detectors, the failure of one detector would not require additional fire watches. Choice b-RHR Pump B has the fire detector and the fire watch requirement. Choice c-Component Cooling Pump B is required for safe shutdown and has only one fire detector in its vicinity. Choice d-The Control Room is continuously manned so a fire watch in needed.

Comments
Reviewed by dtb 3/28-Validated 3/26

Record Number
096

QUESTION

The following Plant conditions exist:

- A high radiation alarm has been received on R-9.
- Health Physics has verified the alarm.
- Chemistry has taken RCS samples and has informed the Shift Manager that RCS activity has exceeded 91/E μCi/cc.
- A mixed bed demineralizer is in service.
- One 40 gpm orifice is in service.
- Charging Pump C is running in auto and Charging Pump B is in manual.

What action should the Operators take to help reduce the RCS activity?

A. Perform a hydrogen peroxide addition prior to tripping the Reactor.
B. Place the 80 gpm orifice in service and start Charging Pump A to match the letdown flow rate.
C. Place the second 40 gpm orifice in service and raise charging pump speed to match the letdown flow rate.
D. Isolate letdown; run one Charging Pump at minimum speed charging only to the RxCP seals; initiate excess letdown.

Answer	Question Source	Cognitive Level	Question Type	Level
C	Facility Exam Bank-000076011G02	Comprehension	Direct	SRO

Tier/Group	K/A#	K/A Rating (RO/SRO)	K/A System/Event
T1/G1	076AA2.05	2.2/2.5	High Reactor Coolant Activity

K/A Statement condition
AK2-Knowledge of the interrelations between the High Reactor Coolant Activity and the following: (CFR 41.7/45.7)

K/A Statement
AA2.05-CVCS letdown flow rate indication

Reference	Provided Reference	Objective
A-RC-36A; N-CVC-35B	NONE	1190320302

Objective Statement
DEMONSTRATE AN UNDERSTANDING OF THE RESPONSIBILITIES AND REQUIREMENTS FOR THE SHIFT MANAGER

Explanation
Choice a-This will not reduce the activity. Choice b-This would violate the maximum flow rate through the mixed bed demineralizer. Choice c-A-RC36A says to operate the Mixed Bed Demineralizers at maximum flow rate (80 gpm) to reduce the activity. This will do that. Choice d-This is the reverse of the action needed to accomplish the goal of reducing activity.

Comments
Reviewed by dtb 3/28-Validated 3/26

Question #96
000076011G02;

The following Plant conditions exist:

- A high radiation alarm has been received on R-9.
- Health Physics has verified the alarm.
- Chemistry has taken RCS samples and has informed Ü_Û the Shift Supervisor that RCS activity has exceeded 91/E æCi/cc.

What action should the Operators take to help reduce the RCS activity?

a. Perform a hydrogen peroxide addition prior to tripping the Reactor.

b. Backdown the Plant at maximum controllable rate, dumping steam to the condenser.

c. Operate the Mixed Bed Demineralizers at maximum flow rate of 80 gpm by increasing charging and letdown flow.

d. Isolate letdown; run one Charging Pump at minimum speed charging only to the RxCP seals; initiate excess letdown.

ANSWER:

c.

TIME ELEMENT: 3 Minutes POINTS: 1.0

REFERENCES:

1) OP A-RM-45, Rev. Z
2) OP A-RC-36A, Rev. H

USE OF REFERENCES EXPECTED: Yes KNPP SYSTEM NUMBER: 036

OBJECTIVE NUMBER: See K/A number TASK NUMBER: 0360010401

K/A NUMBER: 000076G11 K/A RATING:

STATIC SIMULATOR CONDITIONS: N/A ASSOCIATED JPM: N/A

QUALIFICATION LEVEL: RO/SRO REV: E

Add Indication for 076aa2.05 for SRO only Qst

Record Number
097

QUESTION

The following Plant conditions exist:

- The plant was at 100% power prior to a LOCA
- Safety Injection occurred with loss offsite power

Which of the following conditions would be entry conditions for FR-C.2, Response to Degraded Core Cooling?

A. Core Exit Thermocouples reading >1200°F
B. Core Exit Thermocouples reading >1200°F and Subcooling <30°F
C. Subcooling <30°F and RLVIS void fraction decreasing.
D. Subcooling <30°F and Core Exit Thermocouples reading >700°F

Answer	Question Source	Cognitive Level	Question Type	Level
D	N/A	Memory	New	SRO

Tier/Group	K/A#	K/A Rating (RO/SRO)	K/A System/Event
T1/G1	E06 2.4.1	4.3/4.6	Degraded Core Cooling

K/A Statement condition
2.4-Emergency Procedures /Plan

K/A Statement
2.4.1-Knowledge of EOP entry conditions and immediate action steps.

Reference	Provided Reference	Objective
F-0.2, FR-C.2	NONE	1190070502A01

Objective Statement
IMPLEMENT THE IPEOP'S AS THE IPEOP COORDINATOR IN ACCORDANCE WITH UG-0.

Explanation
Per F-0.2, the entry conditions for FR-C.2 require Core Exit Thermocouples reading to be <1200 but >700°F with subcooling <30°F. Options A and B are the entry condition for FR-C.1. Option C would be a green path.

Comments
Reviewed by dtb 3/28-Validated 3/26

Record Number
098

QUESTION

The following Plant conditions exist:

- Nuclear Control Operators are responding to a LOCA.
- FR-C.2 , Response to Degraded Core Cooling, has been entered.

After entering the appropriate function restoration procedure and attempting to establish SI, what further action should be taken to reduce CET Temperatures?

A. Stop all running RXCPs.
B. Perform a rapid cooldown (>100°F/hr.) to depressurize the RCS.
C. Open PRZR PORVs to depressurize and inject the SI Accumulators.
D. Perform a controlled cooldown (<100°F/hr.) to depressurize the RCS.

Answer	Question Source	Cognitive Level	Question Type	Level
D	Facility Exam Bank-00074012G03	Memory	Modified	SRO

Tier/Group	K/A#	K/A Rating (RO/SRO)	K/A System/Event
T1/G1	E06EA2.2	3.5/4.1	Degraded Core Cooling

K/A Statement condition
EA2-Ability to determine and interpret the following as they apply to the (Degraded Core Cooling) (CFR 43.5/45.13)

K/A Statement
EA2.2-Adherence to appropriate procedures and operation within the limitations in the facility's license and amendments

Reference	Provided Reference	Objective
FR-C.2 background document	NONE	1190070502A01

Objective Statement
IMPLEMENT THE IPEOP'S AS THE IPEOP COORDINATOR IN ACCORDANCE WITH UG-0.

Explanation
Unlike FR-C.1, FR-C.2 does a controlled depressurization. This depressurization must be with the limit 100°F/hr, the normal plant limit. This is to accomplish the injection of the SI accumulators in both cases. Option A is a used for FR-H.1. Option b is used for FR-C.1. Option C is used in FR-C.1 to initiate SI flow.

Comments
Reviewed by dtb 3/28-Validated 3/26

000074012G03;

The following Plant conditions exist:

- Nuclear Control Operators are responding to a LOCA.
- All CET indications are reading GREATER THAN 1200 degrees Fahrenheit.

After entering the appropriate function restoration procedure, attempts to
establish SI or Charging Flow fail. What further action should be taken to
reduce CET temperatures?

a. Stop all running RXCPs.

b. Rapidly depressurize the secondary.

c. Open PRZR PORVs to depressurize and inject the SI Accumulators.

d. Isolate SI Accumulators and vent Rx Vessel Head to re-establish
Natural Circulation Cooling.

ANSWER:

b.

TIME ELEMENT: 3 Minutes POINTS: 1.00

REFERENCES:

1) IPEOP B.G Doc. FR-C.1, Rev. H
2) IPEOP FR-C.1, Rev. L

USE OF REFERENCES EXPECTED: Yes KNPP SYSTEM NUMBER: FRC

OBJECTIVE NUMBER: FRC0010501K03 TASK NUMBER: FRC0010501

STATIC SIMULATOR CONDITIONS: N/A ASSOCIATED JPM: N/A

QUALIFICATION LEVEL: RO/SRO REV: E

Record Number
099

QUESTION

During cooldown and depressurization of the RCS in ES-0.3, Natural Circulation Cooldown with Steam Void in Vessel, the Reactor Operator identifies a yellow path on Inventory. Why should the IPEOP Coordinator remain in ES-0.3 instead of transitioning to FR-I.3, Response to Voids in the Reactor Vessel?

A. Once the ES-0.3 is started, ES-0.3 has precedence over FRGs
B. ES-0.3 allows for a void in the reactor vessel under controlled conditions.
C. If FR-I.3 is performed, it would increase the steam void as pressure is decreased
D. Yellow path FRGs should be performed only after the Procedure in effect is completed.

Answer	Question Source	Cognitive Level	Question Type	Level
B	Facility Exam Bank-FRGADV018	Comprehension	Direct	SRO

Tier/Group	K/A#	K/A Rating (RO/SRO)	K/A System/Event
T1/G1	E10EA2.1	3.2/3.9	Natural Circulation with Steam Void in Vessel with/without RVLIS

K/A Statement condition
EA2-Ability to determine and interpret the following as they apply to the (Natural Circulation with Steam Void in Vessel with/without RVLIS) (CFR 43.5/45.13)

K/A Statement
EA2.1-Facility conditions and selection of appropriate procedures during abnormal and emergency operations

Reference	Provided Reference	Objective
FR-I.3 Background Document, ES-0.3 Background Document	NONE	1190070502A01

Objective Statement
IMPLEMENT THE IPEOP'S AS THE IPEOP COORDINATOR IN ACCORDANCE WITH UG-0.

Explanation
FR-I.3 is used to address voids in the vessel but ES-0.3 is designed to allow voids in the head. FR-I.3 directs the operator not to perform this procedure if a natural circulation cooldown is in progress. Option A is incorrect, although it is correct for ES-1.3. Option C would be correct if it happened, but this should not occur. Option D is never correct although yellow path FRGs are optional.

Comments
Reviewed by dtb 3/28-Validated 3/26

Question #99

FRGADV018;

During cooldown and depressurization of the RCS in ES-0.3, Natural Circulation
Cooldown with Steam Void in Vessel, the Reactor Operator identifies a yellow
path on Inventory. Why should the IPEOP Coordinator remain in ES-0.3 instead
of transitioning to FR-I.3, Response to Voids in the Reactor Vessel?

ANSWER:

If FR-I.3 was used to vent the reactor vessel this would not eliminate the steam void and as pressure decreased more water would flash to steam.

OR

ES-0.3 allows for a void in the reactor vessel under controlled conditions.

TIME ELEMENT: 2 Minutes POINTS: 1.0

REFERENCES:

1) IPEOP Background Document FR-I.3, Rev E
2) IPEOP Background Document ES-0.3, Rev F

USE OF REFERENCES EXPECTED: NO KNPP SYSTEM NUMBER: FRG

OBJECTIVE NUMBER: FRI0030501K02 TASK NUMBER:

K/A NUMBER:

STATIC SIMULATOR CONDITIONS: N/A ASSOCIATED JPM: N/A

QUALIFICATION LEVEL: RO/SRO REV: B
Modify for E10EA2.1 SRO ONLY

Record Number
100

QUESTION

You have entered FR-S.1, Response to Nuclear Power Generation/ATWS, from ES-0.1, Reactor Trip Response, due to an Orange path. CVC-440, Emergency Boration Valve, will NOT open from the Control Room. How are the contingency steps different in FR-S.1 from E-CVC-35, Emergency Boration?

A. Both FR-S.1 and E-CVC-35 are the same.
B. FR-S.1 directs the IMMEDIATE manual actuation of Safety Injection, E-CVC-35 does NOT.
C. E-CVC-35 has a manual start of the SI pumps, FR-S.1 has manual actuation of Safety Injection
D. E-CVC-35 allows flow from the Blender and from the RWST to the Charging Pumps, FR-S.1 does NOT.

Answer	Question Source	Cognitive Level	Question Type	Level
D	N/A	Comprehension	New	SRO

Tier/Group	K/A#	K/A Rating (RO/SRO)	K/A System/Event
T1/G2	007EA2.04	4.4/4.6	Reactor Trip-Stabilization-Recovery

K/A Statement condition
EA2-Ability to determine or interpret the following as they apply to a reactor trip: (CFR 41.7/45.5/45.6)

K/A Statement
EA2.04-If reactor should have tripped but has not done so, manually trip the reactor and carry out actions in ATWS

Reference	Provided Reference	Objective
FR-S.1, FR-S.1 Background Document, E-CVC-35	NONE	1190070502A01

Objective Statement
IMPLEMENT THE IPEOP'S AS THE IPEOP COORDINATOR IN ACCORDANCE WITH UG-0.

Explanation
Per E-CVC-35 allows flow from the Blender and from the RWST to the Charging Pumps, FR-S.1 directs local opening of CVC-440 or CVC-405 only. Options B and C are incorrect because initiation of Safety Injection is not desired per the background document. Option A is incorrect because they are different.

Comments
Reviewed by dtb 3/28-Validated 3/26

Record Number
101

QUESTION

The following Plant conditions exist:

- Loss of all AC power
- Diesel Generator A Out Of Service for repair
- Diesel Generator B fail to start cause unknown
- Technical Support center Diesel will NOT close onto Bus 46

You are currently in ECA-0.0 "Loss of All AC Power".

The battery would be considered completely discharged when it reaches which ONE (1) on the following?

A. Battery bus voltage of 90 volts DC.
B. Battery bus voltage of 100 volts DC.
C. Battery bus voltage of 105 volts DC.
D. Battery bus voltage of 110 volts DC.

Answer	Question Source	Cognitive Level	Question Type	Level
C	N/A	Memory	New	BOTH

Tier/Group	K/A#	K/A Rating (RO/SRO)	K/A System/Event
T1/G1	055EA1.05	3.3/3.6	Station Blackout

K/A Statement condition
EA1-Ability to operate and monitor the following as they apply to a Station Blackout: (CFR 41.7/45.5/45.6)

K/A Statement
EA1.05-Battery, when approaching fully discharged

Reference	Provided Reference	Objective
USAR 8.2-6, System Description 38	NONE	0380000001K06

Objective Statement
DISCUSS THE DESIGN CHARACTERISTICS OF THE DC AND EMERGENCY AC SUPPLY SYSTEM FOR ANY MODE OF OPERATION PER SYSTEM DESCRIPTION 38 AND USAR SECTIONS 1.8 AND 8.0.

Explanation
Option C is correct as stated in System Description 38 and this is based on the 1.78 volt lower discharge limit for each of the 59 cells which comprise a battery maximum postulated discharge rate as stated in the USAR. Option A, B, D are incorrect based on the incorrect values for voltage.

Comments
Reviewed by dtb 3/28-Validated 3/26

Record Number
102

QUESTION

There has been a major Service Water break in the Containment which has been secured but left two (2) feet of water as indicated by the Containment Wide Range Level Indicators on the Containment floor. Why would this existing water level be a concern?

A. In the event of a steam line break and a LOCA in the Containment the resulting water level from all the possible sources used to mitigate the accident could exceed the maximum design flood level of the Containment thus possibly causing the loss of equipment needed during the accident/recovery period.
B. In the event of a Feedwater Line Break in the Containment the resulting water level from all the possible sources used to mitigate the accident could exceed the maximum design flood level of the Containment thus causing a higher then design peak Containment pressure during an accident.
C. In the event of a steam line break in the Containment and associated Steam Generator tube rupture the resulting water level from all the possible sources used to mitigate the accident could exceed the maximum design level of the Containment thus causing a higher than design peak Containment pressure during an accident.
D. The additional water is of NO concern because the water in Containment Sump B can be pump out with the RHR Pumps.

Answer	Question Source	Cognitive Level	Question Type	Level
A	N/A	Comprehension	New	BOTH

Tier/Group	K/A#	K/A Rating (RO/SRO)	K/A System/Event
T1/G3	E15EK2.2	2.7/2.9	Containment Flooding

K/A Statement condition
EK2.-Knowledge of the interrelations between the (Containment Flooding) and the following: (CFR 41.7/45.7)

K/A Statement
EK2.2-Facility's heat removal systems, including primary coolant, emergency coolant, the decay heat removal systems, and relations between the proper operation of these systems to the operation of the facility

Reference	Provided Reference	Objective
FR-Z.2 Background Documents	NONE	FRZ0020501K04

Objective Statement
GIVEN A CONTAINMENT FLOODING CONDITION, EXPLAIN THE BASIS FOR ACTIONS TAKEN PER FR-Z.2 BACKGROUND DOCUMENT.

Explanation
Option A is correct because the information contained in the IPEP background Document states that water is excess of the water from RCS system sources and the Steam Generator makeup sources for example Service Water would cause the water level in the Containment to exceed the design flood level. If the design flood level is exceeded needed safety equipment my not be available. Option B and Option C is incorrect because the concern is equipment flooding not Containment pressure for excess water in the Containment. Option D is incorrect because it does not address of the off normal condition in relation to accident conditions.

Comments
Reviewed by dtb 3/28-Validated 3/26

Record Number
103

QUESTION

Which ONE (1) of the following correctly identifies the MCCs that supply power to the heaters in Boric Acid Storage Tanks (BAST) A and B?

A. MCC 52A supplies the heaters in BAST A, MCC 62D supplies the heaters in BAST B.
B. MCC 52B supplies the heaters in BAST A, MCC 62E supplies the heaters in BAST B.
C. Both MCCs 52A and 62D supply heaters in BAST A and in BAST B.
D. Both MCCs 52B and 62E supply heaters in BAST A and in BAST B.

Answer	Question Source	Cognitive Level	Question Type	Level
D	N/A	Memory	New	BOTH

Tier/Group	K/A#	K/A Rating (RO/SRO)	K/A System/Event
T2/G1	004K2.04	2.6/2.7	Chemical and Volume Control

K/A Statement condition
K2-Knowledge of bus power supplies to the following: (CFR 41.7)

K/A Statement
K2.04-BWST tank heaters

Reference	Provided Reference	Objective
System Description 35, Prints E-417& E-419	NONE	0350000001K06

Objective Statement
DISCUSS THE DESIGN CHARACTERISTICS OF THE CVC SYSTEM FOR ANY MODE OF OPERATION PER SYSTEM DESCRIPTION 35 AND USAR SECTIONS 9.2, 10A.5, AND 14.1.

Explanation
Heaters 1A1 and 1B1 are supplied from MCC 52B. Heaters 1A2 and 1B2 are supplied from MCC 62E.

Comments
Reviewed by dtb 3/28-Validated 3/26

Record Number
104

QUESTION

The plant is operating at 100% power with all systems in their normal lineup. A fire occurs in the vicinity of the BA Evaporator Control panel which results in a loss of MCC 52E. The fire is quickly extinguished.

Which ONE (1) of the following explains an operational impact of this information?

A. If Emergency Boration was required, the Immediate Actions could NOT be accomplished.
B. If Main Feedwater Isolation was required, it would NOT occur automatically.
C. PR-1A Pressurizer PORV Block valve could NOT be used to isolate a leaking PORV.
D. If an SI occurs, the suction from the RWST to Safety Injection Pump A would be lost.

Answer	Question Source	Cognitive Level	Question Type	Level
A	N/A	Comprehension	New	RO

Tier/Group	K/A#	K/A Rating (RO/SRO)	K/A System/Event
T2/G1	004K2.05	2.7/2.9	Chemical and Volume Control

K/A Statement condition
K2-Knowledge of bus power supplies to the following: (CFR 41.7)

K/A Statement
K2.05-MOVs

Reference	Provided Reference	Objective
E-CVC-35, E418	NONE	0350010501A02

Objective Statement
RESPOND TO THE INABILITY TO ESTABLISH EMERGENCY BORATION DURING AN UNEXPECTED POSITIVE REACTIVITY CONDITION IN ACCORDANCE WITH E-CVC-35.

Explanation
Choice A-CVC-440 is a normally closed valve so if power is lost the valve could not be opened from the control room. This is an Immediate Action. Choice B-Although the normally open valve, FW-12A, could not be closed, it is not how a Main Feedwater Isolation occurs. That occurs from the FRVs and Bypass valves. Choice C-PR-1A is powered from MCC 52B so the loss of MCC 52E will not affect the valve. Choice D-SI-5A is a normally open valve so even though it loses power when MCC 52E is deenergized it will not prevent the SI pump from taking a suction on the RWST.

Comments
Reviewed by dtb 3/28-Validated 3/26

Record Number
105

QUESTION

The plant is operating at 100% power with all systems in their normal lineup. Which ONE (1) of the following could cause a reactor trip and Safety Injection actuation? Assume NO operator action.

A. TE-401, Reactor Coolant Tave (Red Channel), fails LOW.
B. PT-431, Pressurizer Pressure (Blue Channel), fails HIGH.
C. TRIP of both Main Feed Pumps.
D. Main Generator TRIP.

Answer	Question Source	Cognitive Level	Question Type	Level
B	N/A	Comprehension	New	BOTH

Tier/Group	K/A#	K/A Rating (RO/SRO)	K/A System/Event
T2/G1	013A2.03	4.4/4.7	Engineered Safety Features Actuation

K/A Statement condition
A2-Ability to (a) predict the impacts of the following malfunctions or operations on the ESFAS; and (b) based Ability on those predictions, use procedures to correct, control, or mitigate the consequences of those malfunctions or operations; (CFR 41.5/43.5/45.3/45.13)

K/A Statement
A2.03-Rapid depressurization

Reference	Provided Reference	Objective
XK-100-154	NONE	0360000001K17

Objective Statement
EXPLAIN THE RESPONSE TO THE OPERATION OF ALL PRESSURIZER PRESSURE CONTROL SYSTEM CONTROLS IN ACCORDANCE WITH LOGIC DIAGRAMS/SCHEMATICS E2037, E2038, E2039, E2042, XK100-148, XK100-150, XK100-154, XK100-155, AND XK100-546.

Explanation
Choice A – The TE-401 failure will not affect pressure to any significant degree. Choice B-When PT-431 fails high it causes the spray valves to open. With no operator action this causes a rapid RCS depressurization leading to a reactor trip and SI. Choice C-Although this will cause a reactor trip it will not cause a safety injection because this will lead to an overpressure condition. Choice D-A Main Generator trip causes RCS pressure to rise not fall so an SI will not occur.

Comments
Reviewed by dtb 3/28-Validated 3/26

Record Number
106

QUESTION

The reactor has been recently started up following a refueling outage. Which ONE (1) of the following power range indications should be expected during the power escalation?

A. Indicated power will be higher than actual power if fouling on Main Turbine blades had been reduced during the outage.
B. Actual power will be higher than indicated power because of the gain adjustments that would have been made prior to the refueling outage.
C. Indicated power will be higher than actual power because of the closer coupling between the core and the power range detectors following the refueling outage.
D. Actual power will be higher than indicated power because of the boron depletion that will have occurred during the refueling outage.

Answer	Question Source	Cognitive Level	Question Type	Level
B	N/A	Comprehension	New	RO

Tier/Group	K/A#	K/A Rating (RO/SRO)	K/A System/Event
T2/G1	015A1.06	2.5*/2.9*	Nuclear Instrumentation

K/A Statement condition
A1-Ability to predict and/or monitor changes in parameters to prevent exceeding design limits) associated with operating the NIS controls including: (CFR 41.5 . 45.5)

K/A Statement
A1.06-Fuel burnup

Reference	Provided Reference	Objective
Kewaunee Core Control Theory, System Description 48	NONE	0480000001K02

Objective Statement
DISCUSS THE DESIGN CHARACTERISTICS OF THE NUCLEAR INSTRUMENTATION SYSTEM, FOR ANY MODE OF OPERATION, PER SYSTEM DESCRIPTION 048 AND USAR SECTIONS 7.2 AND 7.4.

Explanation
Choice a-Although this would allow for more power to be produced from the turbine it would not affect the power indication. Choice b-As the fuel burns up the gain must be adjusted from time to time to account for the fact that for a given power level the flux would have to be higher. Thus coming out of the outage the adjustments would have to be reversed and until they are made, the actual power will be higher than indicated. Choice c-The coupling between the core and the detector would be unchanged provided the physical location of the detectors is unchanged. Choice d-Boron depletion would be negligible during the outage because there is so little flux. And the effect would be the reverse of that postulated.

Comments
Reviewed by dtb 3/28-Validated 3/26

Record Number
107

QUESTION

Which ONE (1) of the following radiation monitoring functions would be lost if R-40 and R-41 were out of service when a Loss of Reactor Coolant occurred in Containment?

A. It would NOT be possible to use radiation monitors to detect fuel damage.
B. It would NOT be possible to use radiation monitors to determine whether the RCS is intact inside Containment.
C. RCS leak rate could NOT be calculated using the radiation monitoring method prescribed in Technical Specifications.
D. It would NOT be possible to determine if the RCS pressure instruments had been adversely affected by Containment radiation.

Answer	Question Source	Cognitive Level	Question Type	Level
D	N/A	Analysis	New	RO

Tier/Group	K/A#	K/A Rating (RO/SRO)	K/A System/Event
T2/G1	072 2.1.32	3.4/3.8	Area Radiation Monitoring

K/A Statement condition
2.1-Conduct of Operations

K/A Statement
2.1.32-Ability to explain and apply all system limits and precautions.

Reference	Provided Reference	Objective
EPIP-AD-02, E2021	NONE	0450000001K02

Objective Statement
EXPLAIN THE RESPONSE TO THE OPERATION OF ALL RADIATION MONITORING SYSTEM CONTROLS IN ACCORDANCE WITH THE FOLLOWING LOGIC DIAGRAMS: E2013, E2018, E2019, E2021, E2951, E3745 and E3748.

Explanation
Choice A-R-9 could be used for this function. R-37 or R-38 could also be used. Choice B-R-2 or R-7 could be used for this function. Choice C-R-11/12 would normally be used for this function. Choice D-Adverse Containment values are used when Containment radiation level exceeds 10E5 R/hr. The range of R-40/41 is 1-10E8 R/hr. The highest range of a radiation monitor besides R-40/41 in Containment is 10E4 R/hr on R-38 which is insufficient to determine whether adverse Containment conditions exist.

Comments
Reviewed by dtb 3/28-Validated 3/26

Record Number
108

QUESTION

Inoperability of which ONE (1) of the following instruments would require the reactor to be shut down based on NOT having adequate Accident Monitoring Instrumentation available?

A. A. SG PORV valve position
B. SI flow meter
C. Source Range N-31 Indication
D. Containment Hydrogen Monitor

Answer	Question Source	Cognitive Level	Question Type	Level
D	N/A	Memory	New	BOTH

Tier/Group	K/A#	K/A Rating (RO/SRO)	K/A System/Event
T3	2.4.3	3.5/3.8	GENERIC

K/A Statement condition
2.4-Emergency Procedures /Plan

K/A Statement
2.4.3-Ability to identify post-accident instrumentation.

Reference	Provided Reference	Objective
TS Table 3.5-6	NONE	1190110301A01

Objective Statement
RECOGNIZE PLANT CONDITIONS THAT ARE ADDRESSED IN TECHNICAL SPECIFICATIONS AND LOCATE THE APPLICABLE INFORMATION.

Explanation
Self-explanatory; merely use the table 3.5-6 in Tech Specs

Comments
Reviewed by dtb 3/28-Validated 3/26

Record Number
109

QUESTION

The plant is operating at full power when the RXCP A OIL LEVEL HIGH/LOW alarm is received. All the temperatures associated with the RXCP are at their normal values and stable.

Which of the following should be contacted for the given reason in response to the alarm?

A. The STA should be contacted to perform an Operability Determination.
B. An electrician should be directed to add oil to the RXCP if the level is low.
C. A HazMat team should be directed to enter the Containment and clean up any oil spill.
D. The Plant Manager should be notified of the impending reactor trip.

Answer	Question Source	Cognitive Level	Question Type	Level
B	N/A	Memory	New	SRO

Tier/Group	K/A#	K/A Rating (RO/SRO)	K/A System/Event
T1/G1	015 2.1.14	2.5/3.3	RCP Malfunctions

K/A Statement condition
2.1-Conduct of Operations

K/A Statement
2.1.14-Knowledge of system status criteria which require the notification of plant personnel

Reference	Provided Reference	Objective
A-RC-36C	NONE	1190330302

Objective Statement
DEMONSTRATE AN UNDERSTANDING OF THE RESPONSIBILITIES AND REQUIREMENTS FOR THE CONTROL ROOM SUPERVISOR

Explanation
The given alarm is an entry condition to A-RC-36C. One of the subsequent actions of that procedure is to send an electrician into the Containment to add oil if the level is low.

Comments
Reviewed by dtb 3/28-Validated 3/26

Record Number
110

QUESTION

Select the statement that explains the basis for the minimum required RWST boron concentration.

A. It ensures that the pH of the Containment sump will be sufficiently alkaline to enhance removal of iodine fission products from the Containment atmosphere.
B. It ensures that sufficient negative reactivity is available to ensure that the reactor will be shut down following an Anticipated Transient Without Scram (ATWS).
C. It ensures that sufficient negative reactivity is available to shut down the reactor following a Main Steam Line Break with a return to power.
D. It ensures that sufficient negative reactivity is available to shut down the reactor if an RCCA is ejected from the core at 100% power.

Answer	Question Source	Cognitive Level	Question Type	Level
C	N/A	Memory	New	SRO

Tier/Group	K/A#	K/A Rating (RO/SRO)	K/A System/Event
T1/G1	040 2.2.25	2.5/3.7	Steam Line Rupture

K/A Statement condition
2.2-Equipment Control

K/A Statement
2.2.25-Knowledge of bases in technical specifications for limiting conditions for operations and safety limits.

Reference	Provided Reference	Objective
USAR 14.2.5	NONE	1190190302K01

Objective Statement
GIVEN A SYSTEM OR COMPONENT, RECALL THE LCO, AND EXPLAIN THE BASES PER TECHNICAL SPECIFICATIONS.

Explanation
Choice A-This is actually the basis for the NaOH in the spray additive system. Choice B-ATWS mitigation is achieved by tripping the Main Turbine and starting the AFW pumps if needed. Choice C-A steam line break adds positive reactivity so the RWST must contain an adequate concentration of boric acid to ensure that the reactor can be shutdown even with the most reactive RCCA stuck out of the core. Choice D-The RCCA ejection reactivity excursion will be limited by the Doppler fuel coefficient and terminated by the High Flux trip.

Comments
Reviewed by dtb 3/28-Validated 3/26

Record Number
111

QUESTION

The reactor is operating at full power. The chemist informs the control room that Dose Equivalent I-131 is 1 μCi/gram. Assuming that this value does NOT change, ALL of the following actions must be performed EXCEPT:

A. Sample the RCS once every four hours.
B. If the activity has NOT changed in 48 hours, shut down the Reactor and cool the RCS to < 500°F within 6 hours.
C. If the activity has NOT changed in 48 hours, declare an Unusual Event and notify the State and Counties within 15 minutes and the NRC within one hour of the declaration.
D. If the reactor is shutdown because of the high RCS activity, the NRC must approve any restart.

Answer	Question Source	Cognitive Level	Question Type	Level
D	N/A	Memory	New	SRO

Tier/Group	K/A#	K/A Rating (RO/SRO)	K/A System/Event
T1/G1	076 2.4.30	2.2/3.6	High Reactor Coolant Activity

K/A Statement condition
2.4-Emergency Procedures /Plan

K/A Statement
2.4.30-Knowledge of which events related to system operations/status should be reported to outside agencies

Reference	Provided Reference	Objective
A-RC-36A; EPIP-AD-02	NONE	0360010401A01

Objective Statement
GIVEN HIGH REACTOR COOLANT ACTIVITY, RESPOND IN ACCORDANCE WITH A-RC-36A.

Explanation
Choice A-This is required by A-RC-36A. Choice B-This is required by A-RC-36A. Choice C-This is required by EPIP-AD-02. Choice D-This is not required for high RCS activity.

Comments
Reviewed by dtb 3/28-Validated 3/26

Record Number
112

QUESTION

The Unit has experienced a loss of coolant accident and has transitioned from E-1, " LOSS OF REACTOR OR SECONDARY COOLANT" to ECA-1.2, "LOCA OUTSIDE CONTAINMENT" due to high radiation levels in the auxiliary building. The leak is now isolated.

Which ONE (1) of the following is the correct action to take?

A. Remain in ECA-1.2, "LOCA OUTSIDE CONTAINMENT".
B. Transition to ECA-1.1, "LOSS OF EMERGENCY COOLANT RECIRCULATION".
C. Transition to E-1, "LOSS OF REACTOR OR SECONDARY COOLANT".
D. Transition to E-0, "REACTOR TRIP OR SAFETY INJECTION"

Answer	Question Source	Cognitive Level	Question Type	Level
C	N/A	Comprehension	New	SRO

Tier/Group	K/A#	K/A Rating (RO/SRO)	K/A System/Event
T1/G2	022 2.4.8	3.0/3.7	Loss of Reactor Coolant Makeup

K/A Statement condition
2.4-Emergency Procedures /Plan

K/A Statement
2.4.8-Knowledge of how the event-based emergency/abnormal operating procedures are used in conjunction with the symptom-based EOPs.

Reference	Provided Reference	Objective
E-1, ECA-1.2	NONE	1190070502A01

Objective Statement
IMPLEMENT THE IPEOP'S AS THE IPEOP COORDINATOR IN ACCORDANCE WITH UG-0.

Explanation
Explanation: Once in ECA-1.2 the only possible transition paths are to ECA-1.1, "LOSS OF EMERGENCY COOLANT RECIRCULATION" or to E-1, "LOSS OF REACTOR OR SECONDARY COOLANT". The transition to ECA-1.1 assumes that the leak will jeopardize long term recirculation and puts the crew in a mode to correct that. If the leak is isolated the crew is sent to E-1 for further recovery actions.

Comments
Reviewed by dtb 3/28-Validated 3/26

Record Number
113

QUESTION

The plant is operating at full power. R-4 goes into alarm followed shortly by R-13 and R-14 alarming.

This would be indicative of which ONE (1) of the following?

A. Charging pump relief valve lifting.
B. Steam Generator Blowdown tank leak.
C. Waste Gas Decay tank leak.
D. Boric Acid Transfer Pump leak.

Answer	Question Source	Cognitive Level	Question Type	Level
C	N/A	Comprehension	New	SRO

Tier/Group	K/A#	K/A Rating (RO/SRO)	K/A System/Event
T1/G2	060AK2.01	2.6/2.9*	Accidental Gaseous Radwaste Rel

K/A Statement condition
AK2.-Knowledge of the interrelations between the Accidental Gaseous Radwaste Release and the following: (CFR 41.7/45.7)

K/A Statement
AK2.01-ARM system, including the normal radiation-level indications and the operability status

Reference	Provided Reference	Objective
XK-100-36, A204, A206	NONE	0450030401A01

Objective Statement
GIVEN AN R-4 RADIATION INDICATION HIGH CONDITION, RESPOND IN ACCORDANCE WITH A-RM-45.

Explanation
Choice A-The charging pump relief valve goes to the VCT so the Area monitor R-4 would not detect this occurrence. Choice B-The SG Blowdown tank is in the mezzanine so R-4 would not respond to this. Choice C-The Waste Gas Decay tanks are in the vicinity of area monitor R-4 so it will alarm if one of the tanks started to leak. Choice D-The Boric Acid Transfer Pumps are on the 606' level so R-4 would not respond to a leak there.

Comments
RO level being used on only the SRO exam-Reviewed by dtb 3/28-Validated 3/26

Record Number
114

QUESTION

The following Plant conditions exist:

- A refueling outage is in progress.
- The Aux. Operator is unavailable while undergoing decontamination
- An Operator is stationed in Containment
- The Equipment Operator has NOT completed his Aux. Operator Qualifications
- A large air leak develops in Containment and ALL air headers are less than 60 psig.

To isolate the leak, you should direct:

A. The Control Room Operator to close IA-101, Instrument Air to Containment Isolation, and the Containment Operator to close SA-472, SA to Cntmt Isolation.
B. The Equipment Operator to close SA-471, Station Air to Containment Isolation, and the Control Room Operator to close IA-101, Instrument Air to Containment Isolation.
C. The Containment Operator to close SA-472, SA to Cntmt Isolation, and IA-104, IA to Reactor Bldg. Header Isolation.
D. The Equipment Operator to close SA-471, Station Air to Containment Isolation, and locally close IA-101, Instrument Air to Containment Isolation.

Answer	Question Source	Cognitive Level	Question Type	Level
C	N/A	Analysis	New	SRO

Tier/Group	K/A#	K/A Rating (RO/SRO)	K/A System/Event
T1/G2	065AA2.03	2.6/2.9	Loss of Instrument Air

K/A Statement condition
AA2.-Ability to determine and interpret the following as they apply to the Loss of Instrument Air: (CFR 43.5/45.13)

K/A Statement
AA2.03-Location and isolation of leaks

Reference	Provided Reference	Objective
N-AS-01-CL, M213-8, M213-6, E1603, GNP 3.3.1, E-AS-01	NONE	1190330302

Objective Statement
DEMONSTRATE AN UNDERSTANDING OF THE RESPONSIBILITIES AND REQUIREMENTS FOR THE CONTROL ROOM SUPERVISOR

Explanation
SA-472 and IA-104 are located in Containment and will isolate all air supplies in Containment. Option A is incorrect because IA-101 fails open on a loss of air and, since air pressure is < 60 psig, IA-101 would be unreliable. Option B is incorrect because of the same reason as option A and CRS should not send an unqualified operator isolate air if a qualified operator is available. Option D is in correct because the Equipment Operator is unqualified to do this isolation.

Comments
Reviewed by dtb 3/28-Validated 3/26

Record Number
115

QUESTION

The plant has just tripped from 100% power.

The following conditions exist:

- RCS pressure is 1400 psig and decreasing slowly
- Subcooling is 5°F
- Pressurizer level indicators 426 and 427 are off-scale low
- Pressurizer level indicators 428 and 433 are off-scale high
- NO RXCPs are running
- CNTMT pressure is 16 psig and decreasing slowly

All equipment has functioned properly. The crew is responding to the reactor trip using IPEOPs and they are currently in ES-1.2.

Based on this information, what is the minimum E-Plan classification for this event?

A. Unusual Event
B. Alert
C. Site Emergency
D. General Emergency

Answer	Question Source	Cognitive Level	Question Type	Level
C	N/A	Analysis	New	SRO

Tier/Group	K/A#	K/A Rating (RO/SRO)	K/A System/Event
T1/G3	028 2.4.49	2.3/4.1	Pressurizer Level Malfunction

K/A Statement condition
2.4-Emergency Procedures /Plan

K/A Statement
2.4.41-Knowledge of the emergency action level thresholds and classifications. (CFR 43.5/45.11)

Reference	Provided Reference	Objective
EPIP-AD-02	EPIP-AD-02	1190030502A01

Objective Statement
GIVEN ABNORMAL PLANT CONDITIONS, DETERMINE THE PROPER EMERGENCY CLASSIFICATION IN ACCORDANCE WITH EP-AD-2.

Explanation
Based on the information given in the question, the RCS leakage exceeds the charging capacity with the most likely source being the shared reference leg for transmitters 428 and 433. But the question also stipulates that there are no equipment failures so the ECCS has not failed and the CNTMT failure is not imminent therefore a General Emergency classification is not warranted

Comments
Reviewed by dtb 3/28-Validated 3/26

Record Number
116

QUESTION

The Plant is operating at 100% power with the following equipment out of service:

- Turbine Driven AFW Pump
- RHR Pump A

Diesel Generator B Abnormal Alarm comes in. The Equipment Operator reports that lube oil pressure is 2 psig.

Assume a Small (2") LOCA occurs in conjunction with a loss of offsite power. How will these conditions affect the plant response using the IPEOPs?

A. ECA-0.0 will have to used to supply adequate power.
B. FR-H.1 will have to be used because there is NO heat sink available.
C. FR-C.1 will have to be used to maintain adequate core cooling.
D. ECA-1.1 will have to be used because sump recirculation will NOT be possible.

Answer	Question Source	Cognitive Level	Question Type	Level
D	N/A	Comprehension	New	SRO

Tier/Group	K/A#	K/A Rating (RO/SRO)	K/A System/Event
T1/G3	056AA2.22	3.4/3.6	Loss of Off-site Power

K/A Statement condition
AA2.-Ability to determine and interpret the following as they apply to the Loss of Offsite Power: (CFR 43.5/45.13)

K/A Statement
AA2.22-Emergency lube oil pump indicators and low-pressure alarms on ED/G

Reference	Provided Reference	Objective
E-1	NONE	1190070502A01

Objective Statement
IMPLEMENT THE IPEOP'S AS THE IPEOP COORDINATOR IN ACCORDANCE WITH UG-0.

Explanation
Choice A-Power is available to bus 5 from its EDG so ECA-0.0 will not be used. Choice B-The Motor Driven AFW Pump A will supply 200 gpm so a heat sink is available. Choice C-One SI pump is available which is adequate to maintain core temperature below 1200?F so FR-C.1 will not be used. Choice D-Step 17 of E-1 transfers the user to ECA-1.1 when no RHR pump is available. This is the case since the A RHR pump was out of service as an initial condition and B RHR pump will not have a power supply available to it.

Comments
Reviewed by dtb 3/28-Validated 3/26

Record Number
118

QUESTION

The following Plant conditions exist:

- The plant is at 100% power.
- R-9, RCS Letdown Radiation Monitor, is reading 6 R/hr and has been confirmed by chemical analysis.

You have just declared an Unusual Event due to the high RCS activity. If conditions continue to deteriorate, which of the following condition(s)would require you to take action to reclassify the event?

A. R-9 going off-scale high
B. R-13 going off-scale high
C. R-15 reading 1.5E+5 cpm
D. R-4 reading 5.0E+3 mR/hr

Answer	Question Source	Cognitive Level	Question Type	Level
A	Facility Exam bank-344000312A07	Comprehension	Modified	SRO

Tier/Group	K/A#	K/A Rating (RO/SRO)	K/A System/Event
T2/G1	072 2.4.46	3.5/3.6	Area Radiation Monitoring

K/A Statement condition
2.4-Emergency Procedures /Plan

K/A Statement
2.4.46-Ability to verify that the alarms are consistent with the plant conditions.

Reference	Provided Reference	Objective
EPIP-AD-02	EPIP-AD-02	1190030502A01

Objective Statement
GIVEN ABNORMAL PLANT CONDITIONS, DETERMINE THE PROPER EMERGENCY CLASSIFICATION IN ACCORDANCE WITH EP-AD-2.

Explanation
R-9 going off-scale high would require chemistry to sample and confirm the instrument reading. Option B would be correct for a fuel handling accident and is expected during radioactive release events. R-4 and R-15 are expected to increase as radiation levels in the Charging Pump Room and the amount of radioactive gas would increase but are below the reclassification level for during radioactive release events.

Comments
Reviewed by dtb 3/28-Validated 3/26

Record Number
119

QUESTION

Containment pressure has increased to 2 psig due to an air leak in Containment. Why is it important to vent Containment as soon as possible?

A. Containment Vent and Purge System is designed only to work at less than 2.5 psig.
B. Radiation Monitor system filter assemblies could be damaged at this pressure.
C. To ensure ability to handle a pressure increase from a Design Basis Accident.
D. To prevent entry into adverse Containment conditions if IPEOPs are entered.

Answer	Question Source	Cognitive Level	Question Type	Level
C	N/A	Memory	New	SRO

Tier/Group	K/A#	K/A Rating (RO/SRO)	K/A System/Event
T2/G2	029 2.2.25	2.5/3.7	Containment Purge

K/A Statement condition
2.2-Equipment Control

K/A Statement
2.2.25-Knowledge of bases in technical specifications for limiting conditions for operations and safety limits.

Reference	Provided Reference	Objective
Tech. Spec 3.6	NONE	1190190302A02

Objective Statement
ANALYZE PLANT CONDITIONS AND DETERMINE IF ANY TECHNICAL SPECIFICATION LCO ACTION STATEMENTS APPLY.

Explanation
Per T.S. 3.6.c basis, the 2 psi limit is to provide adequate margin between maximum press of 46 psi and peak DBA pressure. Neither option A or B are true. Option D may be considered but is incorrect.

Comments
Reviewed by dtb 3/28-Validated 3/26

Record Number
120

QUESTION

As the Refueling SRO, you are informed of a frayed cable on the Manipulator Crane, which would have caused it to fail the visual inspection. What is the appropriate action to take?

A. Continue refueling operation since it was found after the start of refueling operations for the day.
B. Continue refueling operation until end of the current shift and have the cable repaired prior fuel movement on the next shift.
C. Stop refueling operations requiring the Manipulator Crane and continue refueling operations with the Fuel Handling Crane.
D. Stop all refueling operations until the Manipulator Crane cable is repaired.

Answer	Question Source	Cognitive Level	Question Type	Level
D	N/A	Memory	New	SRO

Tier/Group	K/A#	K/A Rating (RO/SRO)	K/A System/Event
T2/G2	034 2.2.22	3.4/4.1	Fuel Handling Equipment

K/A Statement condition
2.2-Equipment Control

K/A Statement
2.2.22-Knowledge of limiting conditions for operations and safety limits.

Reference	Provided Reference	Objective
Tech Spec 3.8	NONE	1190190302A02

Objective Statement
ANALYZE PLANT CONDITIONS AND DETERMINE IF ANY TECHNICAL SPECIFICATION LCO ACTION STATEMENTS APPLY.

Explanation
Per T.S. 3.8, if any of the Tech. Spec. limits can not be meet, refueling is to cease. A visual inspection of the cranes is to be performed after the dead load test and prior to start of fuel movement. The Refueling SRO should stop all fuel movement except placing fuel in a safe condition immediately.

Comments
Reviewed by dtb 3/28-Validated 3/26

Record Number
121

QUESTION

In response to a HIGH turbine vibration condition the reactor and turbine have been tripped. Vacuum has been broken and the all the conditions are now stable and within limits. Who or what procedure would provide guidance to the Shift Manager or Shift Technical Advisor concerning short term follow-up activities now that the plant is stable?

A. The on call duty NRC officer would provide short term follow-up requirements.
B. The Operations Manager would decide based on what caused the trip who to notify for support.
C. GNP 2.2.1, "Guidelines for Post Trip Activities", would be used by the Operations Manager or Tech Spec alternate to direct notifications for support.
D. GNP 2.2.1, "Guidelines for Post Trip Activities", would be used by the Shift Manager or STA to direct notifications for support and follow-up activities.

Answer	Question Source	Cognitive Level	Question Type	Level
D	N/A	Memory	New	SRO

Tier/Group	K/A#	K/A Rating (RO/SRO)	K/A System/Event
T2/G3	045 2.1.14	2.5/3.3	Main Turbine Generator

K/A Statement condition
2.1-Conduct of Operations

K/A Statement
2.1.14-Knowledge of system status criteria which require the notification of plant personnel

Reference	Provided Reference	Objective
GNP2.2.1	NONE	1190020502A01

Objective Statement
GIVEN A REACTOR TRIP, NOTIFY THE APPROPRIATE POST TRIP ACTIVITIES RESPONSE PERSONNEL IN ACCORDANCE WITH GNP 2.2.1.

Explanation
Option D is correct because the guidance provide by General Nuclear Procedure "GNP2.2.1 Guidelines for Post Trip Activities" put the initial responsibility for these actions with the Shift Manager or the Shift Technical Advisor unless assumed by the Plant Manager. Option A, B, C are incorrect because they do not follow the approved procedural given by General Nuclear Procedure "GNP2.2.1 Guidelines for Post Trip Activities."

Comments
Reviewed by dtb 3/28-Validated 3/26

Record Number
122

QUESTION

The following Plant conditions exist:

- The plant is at 8% power
- SP 54-063, Turbine Trip Mechanism Tests, is in progress.
- The Reactor Operator reports RCS temperature dipped but has returned to 549°F.
- The Balance of Plant reports the Turbine Speed increased to 2000 rpm then returned to 1800 rpm.
- Energy Supply and Control requests power as soon as possible.
- The lead I&C person reports the ROST is out of service due to a broken lead.

The correct course of action is to:

A. Pick up 40 Megawatts (MW) of power as soon as possible.
B. Remain off line until ROST is repaired.
C. Direct a Reactor and Turbine Trip.
D. Direct a Turbine Trip only.

Answer	Question Source	Cognitive Level	Question Type	Level
D	N/A	Comprehension	New	SRO

Tier/Group	K/A#	K/A Rating (RO/SRO)	K/A System/Event
T3	2.1.7	3.7/4.4	GENERIC

K/A Statement condition
2.1-Conduct of Operations

K/A Statement
2.1.7-Ability to evaluate plant performance and make operational judgments based on operating characteristics, reactor behavior, and instrument interpretation.

Reference	Provided Reference	Objective
System Description 54, XK101-24, E-0 Background Document	NONE	1190330302

Objective Statement
DEMONSTRATE AN UNDERSTANDING OF THE RESPONSIBILITIES AND REQUIREMENTS FOR THE CONTROL ROOM SUPERVISOR

Explanation
The mechanical Overspeed trip is at 1998 rpm thus the turbine should have tripped but is blocked. Since the reactor is under 10% power, a reactor trip is not required. Option A would be correct if the turbine would have remained below the trip setpoint. Option B is incorrect because the only limit is to stay below 50% with a single overspeed trip out of service. Option C would be correct if above 10% power.

Comments
Reviewed by dtb 3/28-Validated 3/26

Record Number
123

QUESTION

Which of the following conditions would allow the lifting of the Reactor Vessel Head?

	RCS Temp	RCS Boron
A.	135°F	1862 ppm
B.	135°F	2253 ppm
C.	145°F	1944 ppm
D.	145°F	2275 ppm

Answer	Question Source	Cognitive Level	Question Type	Level
B	N/A	Comprehension	New	SRO

Tier/Group	K/A#	K/A Rating (RO/SRO)	K/A System/Event
T3	2.1.22	2.8/3.3	GENERIC

K/A Statement condition
2.1-Conduct of Operations

K/A Statement
2.1.22-Ability to determine Mode of Operation.

Reference	Provided Reference	Objective
Tech. Spec. 3.8, Tech. Spec. 1.0.J	NONE	1190190302A02

Objective Statement
ANALYZE PLANT CONDITIONS AND DETERMINE IF ANY TECHNICAL SPECIFICATION LCO ACTION STATEMENTS APPLY.

Explanation
Tech. Spec. 1.0.J requires reactivity less than or equal to –5% delta K/K and less than or equal to 140°F. Per Tech. Spec. 3.8, reactivity of -5% delta K/K ensured by 2200 ppm boron concentration. Refueling operations includes the Reactor Vessel Head Lift.

Comments
Reviewed by dtb 3/28-Validated 3/26

Record Number
124

QUESTION

The following Plant conditions exist:

- The plant is at 100% power.
- Diesel Generator B is out of service for governor repair.

An I&C technician request permission to remove from service and test SW-1211A/SV-33303, Service Water to RHR Pump A Fan Coil Unit. What would be the consequences of removing from service and testing SW-1211A at this time?

A. A LCO is exceeded.
B. 24 hour LCO entered.
C. 48 hour LCO entered.
D. 72 hour LCO entered.

Answer	Question Source	Cognitive Level	Question Type	Level
A	Facility Exam bank-342000104A01	Comprehension	Direct	SRO

Tier/Group	K/A#	K/A Rating (RO/SRO)	K/A System/Event
T3	2.2.9	2.0/3.3	GENERIC

K/A Statement condition
2.2-Equipment Control

K/A Statement
2.2.9-Knowledge of the process for determining if the proposed change, test or experiment increases the probability of occurrence or consequences of an accident during the change, test or experiment.

Reference	Provided Reference	Objective
Tech. Spec. 3.3.b, N-ACA-17, E240	NONE	1190190302A02

Objective Statement
ANALYZE PLANT CONDITIONS AND DETERMINE IF ANY TECHNICAL SPECIFICATION LCO ACTION STATEMENTS APPLY.

Explanation
The removal testing of SW-1211A would remove RHR Pump A from service with RHR Pump B already out service. This would require immediate shutdown and should not be allowed.

Comments
Reviewed by dtb 3/28-Validated 3/26

Record Number
125

QUESTION

The following Plant conditions exist:

- The plant is at 55% power following an outage.
- The following equipment is out of service: RAT, Battery B, and SI Pump B

The Maintenance Supervisor informs you, the Shift Manager, that the troubleshooting and repair of the out of service components will take twenty (20) hours each to complete. He also informs you that he only has personnel to work on one job at a time and requests you set the priority to complete the work. Which is the proper prioritization for completion of the tasks?

A. Battery B, RAT, SI Pump B
B. Battery B, SI Pump B, RAT
C. SI Pump B, RAT, Battery B
D. SI Pump B, Battery B, RAT

Answer	Question Source	Cognitive Level	Question Type	Level
B	Facility Exam bank-341000116A02	Analysis	Direct	SRO

Tier/Group	K/A#	K/A Rating (RO/SRO)	K/A System/Event
T3	2.2.20	2.2/3.3	GENERIC

K/A Statement condition
2.2-Equipment Control

K/A Statement
2.2.20-Knowledge of the process for managing troubleshooting activities.

Reference	Provided Reference	Objective
Tech. Spec. (section 3.3) (section 3.7)	NONE	1190190302A02

Objective Statement
ANALYZE PLANT CONDITIONS AND DETERMINE IF ANY TECHNICAL SPECIFICATION LCO ACTION STATEMENTS APPLY.

Explanation
The LCO for the Battery is 24 hours, the LCO for the SI Pump is 72 hours and RAT is 7 day LCO. As exceeding a LCO is not desired and it is possible to repair all the components with exceeding the LCOs; the priority is the battery, then the SI Pump, followed by the RAT.

Comments
Reviewed by dtb 3/28-Validated 3/26

Record Number
126

QUESTION

During fuel movement per Fuel Assembly Movement Sequence, which ONE (1) of the following is acceptable for alternative position(s) when placing the Fuel Assembly?

A. Only when used for "boxing" another Fuel Assembly.
B. Only for temporary storage along the Baffle plate.
C. For temporary storage along the Baffle plate and Dead Cell Load Testing.
D. When used for "boxing" another Fuel Assembly and temporary storage along the Baffle plate.

Answer	Question Source	Cognitive Level	Question Type	Level
D	N/A	Memory	New	SRO

Tier/Group	K/A#	K/A Rating (RO/SRO)	K/A System/Event
T3	2.2.31	2.2/2.9*	GENERIC

K/A Statement condition
2.2-Equipment Control

K/A Statement
2.2.31-Knowledge of procedures and limitations involved in initial core loading.

Reference	Provided Reference	Objective
RF-03.01	NONE	1190310302K01

Objective Statement
EXPLAIN THE RESPONSIBILITIES OF THE REFUELING SRO PER NAD 2.7.

Explanation
Per RF-03.01, Fuel Assembly must be placed in the Assembly Movement Sequence Position except when used for "boxing" another Fuel Assembly and temporary storage along the Baffle plate.

Comments
Reviewed by dtb 3/28-Validated 3/26

Record Number
127

QUESTION

Your shift Aux. Operator informs you that he is currently at 1.45 REM for the year and would receive approximately 30 mR by the end of the year as an Aux. Operator. As the Aux. Operator's supervisor, what action is required by you to allow the Aux. Operator to continue as an Aux. Operator?

Initiate a Form HPF-120 and have it signed by ...

A. the Aux. Operator, and yourself.
B. the Aux. Operator, yourself, and Rad Prot. Department Supervisor.
C. the Aux. Operator, yourself, Rad Prot. Department Supervisor, and Plant Manager
D. the Aux. Operator, yourself, and Rad Prot. Department Supervisor, Plant Manager, and VP-Nuclear.

Answer	Question Source	Cognitive Level	Question Type	Level
B	N/A	Comprehension	New	SRO

Tier/Group	K/A#	K/A Rating (RO/SRO)	K/A System/Event
T3	2.3.1	2.6/3.0	GENERIC

K/A Statement condition
2.3-Radiation Control

K/A Statement
2.3.1-Knowledge of 10 CFR 20 and related facility radiation control requirements.

Reference	Provided Reference	Objective
HP-01.003	NONE	1190330302

Objective Statement
DEMONSTRATE AN UNDERSTANDING OF THE RESPONSIBILITIES AND REQUIREMENTS FOR THE CONTROL ROOM SUPERVISOR

Explanation
Per HP-01.003, the HPF-120 to exceed 1.5 REM is required to be signed by the individual, the supervisor, and Rad Prot. Department Supervisor. Receiving 30 mR would exceed the limit of 1.5 REM. Options C and D are the requirement for the exceeding the next levels of exposure. Option A is never an option per procedure.

Comments
Reviewed by dtb 3/28-Validated 3/26

Record Number
128

QUESTION

The following Plant conditions exist:

- The Plant is at 100% power.
- A Containment entry is required to inspect four (4) valves in Containment
- The valve are in the following radiation fields

Valve #1 – 800 mR/hr
Valve #2 – 400 mR/hr
Valve #3 – 1 R/hr
Valve #4 – 1.5 R/hr

- Each valve will require approximately twelve (12) minutes to inspect.
- You have three (3) NAO to use for the inspection with the following exposure record:

NAO#1 – 200 mR
NAO#2 – 100 mR
NAO#3 – 140 mR

As the CRS and using all three (3) NAOs, which of the following assignments would you use to meet the ALARA requirements?

A. Assign NAO#1 to Valve #4; NAO#2 to Valve #3; and NAO#3 to Valves #1 and #2
B. Assign NAO#1 to Valve #3; NAO#2 to Valve #4; and NAO#3 to Valves #1 and #2
C. Assign NAO#1 to Valve #1 and #2; NAO#2 to Valve #4; and NAO#3 to Valves #3
D. Assign NAO#1 to Valve #3; NAO#2 to Valves #1 and #2; and NAO#3 to Valve #4

Answer	Question Source	Cognitive Level	Question Type	Level
B	N/A	Analysis	New	SRO

Tier/Group	K/A#	K/A Rating (RO/SRO)	K/A System/Event
T3	2.3.2	2.5/2.9	GENERIC

K/A Statement condition
2.3-Radiation Control

K/A Statement
2.3.2-Knowledge of facility ALARA program.

Reference	Provided Reference	Objective
NAD 1.23, HP-4.01	NONE	1190330302

Objective Statement
DEMONSTRATE AN UNDERSTANDING OF THE RESPONSIBILITIES AND REQUIREMENTS FOR THE CONTROL ROOM SUPERVISOR

Explanation
The dose for 12 minutes of work at valve #1 is 160 mR, valve #2 is 80 mR, valve #3 is 200 mR, and valve #4 is 300 mR. Distributing the dose in a manner to prevent one individual from excessive dose would require the NAO with the lowest dose to get the highest and the one with the highest to get the lowest. To equalize the dose, NAO#1 should inspect valve #2, NAO#2 should inspect valve #4 and NAO#3 should inspect valves #1 and #2. This would provide NAO#1 with 200mR or accumulative dose of 400 mR, NAO#2 with 300mR or accumulative dose of 400 mR, and NAO#3 with 240mR or accumulative dose of 380 mR.. Option A NAO#1 would go to 500 mR and NAO #2 would be at 300 mR. Option C NAO#1 would go to 440 mR NAO#3 would go to 340 mR and NAO #2 would be at 340 mR. Option D NAO#1 would go to 400 mR NAO#3 would go to 440 mR and NAO #2 would be at 300 mR.

Comments
Reviewed by dtb 3/28-Validated 3/26

Record Number
129

QUESTION

Which of the following procedures have direct entry?

E-0, Rector Trip and Safety Injection, ...

A. FR-S.1, Response to Nuclear Power Generation/ATWS, and ECA-0.0, Loss of All AC.
B. ECA-0.0, Loss of All AC, and FR-H.1, Response to Loss of Secondary Heat Sink.
C. and FR-S.1, Response to Nuclear Power Generation/ATWS.
D. ECA-0.0, Loss of All AC.

Answer	Question Source	Cognitive Level	Question Type	Level
D	N/A	Memory	New	SRO

Tier/Group	K/A#	K/A Rating (RO/SRO)	K/A System/Event
T3	2.4.1	4.3/4.6	GENERIC

K/A Statement condition
2.4-Emergency Procedures /Plan

K/A Statement
2.4.1-Knowledge of EOP entry conditions and immediate action steps.

Reference	Provided Reference	Objective
ECA-0.0	NONE	1190070502A01

Objective Statement
IMPLEMENT THE IPEOP'S AS THE IPEOP COORDINATOR IN ACCORDANCE WITH UG-0.

Explanation
Only E-0 and ECA-0.0 have direct entry. FR-S.1 has immediate action step but no direct entry. FR-H.1 has neither immediate action steps or direct entry.

Comments
Reviewed by dtb 3/28-Validated 3/26

Record Number
130

QUESTION

The plant is in a Site Emergency, during accountability it is discovered that a worker is missing. Who and at which facility would be contacted to start and coordinate a search?

A. The Site Protection Director at the Security Building.
B. The Support Activities Director at the OSF.
C. The Radiological Protection Director at the RAF.
D. The Event Operations Director at the TSC.

Answer	Question Source	Cognitive Level	Question Type	Level
B	N/A	Memory	New	SRO

Tier/Group	K/A#	K/A Rating (RO/SRO)	K/A System/Event
T3	2.4.42	2.3/3.7	GENERIC

K/A Statement condition
2.4-Emergency Procedures /Plan

K/A Statement
2.4.42-Knowledge of emergency response facilities.

Reference	Provided Reference	Objective
EPIP-AD-04	NONE	1190040502A01

Objective Statement
GIVEN AN EMERGENCY CLASSIFICATION OF ALERT OR HIGHER, PERFORM THE INITIAL ACTIONS OF THE SHIFT MANAGER/EMERGENCY DIRECTOR IN ACCORDANCE WITH EP-AD-4.

Explanation
Per EPIP-AD-04 the Support Activities Director is in charge of search and rescue and is in charge of the OSF (Located in TCS Lower Level). Options A and Care positions that are related to search activities in that Site Protection Director does accountability and Radiological Protection Director deals with injured personnel. Additionally the Site Protection Director reports to the TSC. The Event Operations Director is stationed in the Control Room to support plant operations.

Comments
Reviewed by dtb 3/28-Validated 3/26