MASTER COPY OF WORKING GROUP'S

APP D

DRAFT VERSIONS OF 02/00 Draft Final Report.

113

MEMORANDUM TO: Chairman Meserve
Commissioner Dicus
Commissioner Diaz
Commissioner McGaffigan
Commissioner Merrifield

FROM: William D. Travers
Executive Director for Operations

SUBJECT: DRAFT FINAL TECHNICAL STUDY ON SPENT FUEL POOL ACCIDENT RISKS AT DECOMMISSIONING NUCLEAR POWER PLANTS

In March, 1999, the NRC staff met with the Commission to discuss the ongoing efforts to improve decommissioning regulations. The staff proposed to take a risk-informed look at power reactor decommissioning issues and to use the risk insights derived from this review to guide the promulgation of new regulations. The staff subsequently initiated a technical study on spent fuel pool accident risks at decommissioning plants. The details of this effort are discussed in SECY-99-168, "Improving Decommissioning Regulations for Nuclear Power Plants," dated June 30, 1999. should this use term of report

A preliminary study was completed in June, 1999, and concluded that several initiating events at decommissioning plants needed additional evaluation because the possibility of a zirconium fire in a spent fuel pool drained of all coolant could not be dismissed. The NRC made substantial efforts to involve public and industry representatives throughout this effort. The NRC solicited feedback on its study assumptions and methods and held numerous public meetings including a 2-day public workshop to discuss the work.

The staff has now completed a review and requantification of its preliminary assessment including independent outside technical review of its analyses and assumptions. Attached for your information is the draft final technical study on spent fuel pool accident risks at decommissioning nuclear power plants. The staff is also issuing this draft final report for public comment at this time. Following resolution of any public comments and review by the ACRS, the staff will publish the final report in May, 2000. The staff will utilize the conclusions in this report to support our integrated decommissioning rulemaking plan to be submitted in June, 2000.

Attachment: Draft Final Study on Spent Fuel Pool Accident Risks at Decommissioning Nuclear Power Plants

cc w/att: SECY
OGC
OCA
OPA
CFO
CIO

CONTACT: Tanya Eaton, NRR/DSSA/SPLB
301-415-3610

T/3

MEMORANDUM TO: Chairman Meserve
Commissioner Dicus
Commissioner Diaz
Commissioner McGaffigan
Commissioner Merrifield

FROM: William D. Travers
Executive Director for Operations

SUBJECT: DRAFT FINAL TECHNICAL STUDY ON SPENT FUEL POOL ACCIDENT RISKS AT DECOMMISSIONING NUCLEAR POWER PLANTS

In March, 1999, the NRC staff met with the Commission to discuss the ongoing efforts to improve decommissioning regulations. The staff proposed to take a risk-informed look at power reactor decommissioning issues and to use the risk insights derived from this review to guide the promulgation of new regulations. The staff subsequently initiated a technical study on spent fuel pool accident risks at decommissioning plants. The details of this effort are discussed in SECY-99-168, "Improving Decommissioning Regulations for Nuclear Power Plants," dated June 30, 1999.

A preliminary study was completed in June, 1999, and concluded that several initiating events at decommissioning plants needed additional evaluation because the possibility of a zirconium fire in a spent fuel pool drained of all coolant could not be dismissed. The NRC made substantial efforts to involve public and industry representatives throughout this effort. The NRC solicited feedback on its study assumptions and methods and held numerous public meetings including a 2-day public workshop to discuss the work.

The staff has now completed a review and requantification of its preliminary assessment including independent outside technical review of its analyses and assumptions. Attached for your information is the draft final technical study on spent fuel pool accident risks at decommissioning nuclear power plants. The staff is also issuing this draft final report for public comment at this time. Following resolution of any public comments and review by the ACRS, the staff will publish the final report in May, 2000. The staff will utilize the conclusions in this report to support our integrated decommissioning rulemaking plan to be submitted in June, 2000.

Attachment: Draft Final Study on Spent Fuel Pool Accident Risks at Decommissioning Nuclear Power Plants

cc w/att: SECY OGC OCA OPA CFO CIO

DISTRIBUTION:

File Center	EDO r/f	FMiraglia	SCollins/RZimmerman	MTschiltz
PDIV-D r/f	WHuffman	RDudley	AThadani TEaton	GHubbard
ACRS	BZalcman	MMalloy		

*See previous concurrence

To receive a copy of this document, indicate "C" in the box										
OFFICE	SPLB/SC	C	Tech ED	C	SPLB/BC	C	SRSB/BC	C	SRXB/BC	C
NAME	GHubbard				JHannon		RBarrett		JWermiel	
DATE										

To receive a copy of this document, indicate "C" in the box										
OFFICE	RGEB/BC	C	IQMB/BC	C	DE	C	DE/D	C	IOLB/BC	C
NAME	CCarpenter		TQuay		GBagchi		JStrosnider		HChristensen	
DATE										

To receive a copy of this document, indicate "C" in the box										
OFFICE	DSSA/D		PDIV-D/D		DLPM/D		RES		NMSS	
NAME	GHolahan		SRchards		JZwolinski					
DATE										

To receive a copy of this document, indicate "C" in the box										
OFFICE	ADPT/NRR		NRR/D		EDO					
NAME	BSheron		SCollins		WTravers					
DATE										

DOCUMENT NAME: G:\SPLB\SECTIONA\DECOM.GRP\FinalOutput\Tech Rpt Cover Mmo.wpd
OFFICIAL RECORD COPY

Draft Final Technical Study of Spent Fuel Pool Accident Risk at Decommissioning Nuclear Power Plants

February 2000

Technical Working Group:

Group Leaders:	Diane Jackson, DSSA/SPLB
	~~Wonna Ordaz, DSSA/SPLB~~
	George Hubbard, DSSA/SPLB
	Tanya Eaton, DSSA/SPLB

Technical Expertise:

Seismic	~~Goutam Bagchi, DE~~
~~Maintenance Rule~~	~~Edward Ford, DIPM/IQMB~~
~~Quality Assurance~~	~~Ken Heck, DIPM/IQMB~~
Consequences	Jason Schaperow, RES/DSARE/SMSAB
Safeguards	Robert Skelton, DIPM/IOLB
	Richard Rosano DIPM/IOLB
Fire Protection	Edward Connell, DSSA/SPLB
	Tanya Eaton, DSSA/SPLB
Risk Input	Mark Rubin
	Glenn Kelly, DSSA/SPSB
	Michael Cheok, DSSA/SPSB
Human Reliability	Gareth Parry, DSSA
Criticality	Larry Kopp, DSSA/SRXB
	Anthony Ulses, DSSA/SRXB
Thermal Hydraulics	Joseph Staudenmeier, DSSA/SRXB
	Christopher Boyd, RES/DSARE/SMSAB
Heavy Loads	Edward Throm, DSSA/SPSB
	Brian Thomas, DSSA/SPLB
SFP Operations	Christopher Gratton, DSSA/SPLB
EP	James O'Brien, DIPM/IOLB
	Roger Pederson, DIPM/IOLB

Risk Input
Glenn
Mike
Mark

Other Technical Input

Technical Study of Spent Fuel Pool Accidents for Decommissioning Plants

Table of Contents

List of Tables

List of Figures

Executive Summary

This report documents an evaluation of spent fuel pool accident risk at decommissioning plants. It was done to provide an interim, risk-informed technical basis for reviewing exemption requests, and to provide a regulatory framework for integrated rulemaking. The application of this report is intended to reduce unnecessary regulatory burden, improve efficiency and effectiveness, and establish a consistent, predictable process that will maintain safety and enhance public confidence. The report was initiated when industry asked the NRC to consider whether the risk from decommissioning plants was low enough to justify generic regulatory relief in the areas of emergency planning, indemnification and safeguards.

In the past, decommissioning plants have requested exemptions to certain regulations as a result of their permanently defueled condition. When evaluating the acceptability of exemption requests from regulations for permanently shutdown plants, the staff has assessed the susceptibility of the spent fuel to a zirconium fire accident. To date, exemptions have been granted on a plant-specific basis, resulting in different analyses and criteria being used for the basis of the exemptions. In some cases, we have requested heatup evaluations of the spent fuel cooled only by air. This criterion was used because of national laboratory studies that had identified the potential concern for a significant offsite radiological release from a zirconium fire which may occur when all water is lost from the spent fuel pool. A clad temperature of 565 °C, based on the onset of clad swelling, was used as a conservative limit to ensure no radiological release.

In March, 1999, the staff formed a technical working group to evaluate spent fuel pool accident risk at decommissioning plants. A two month effort was launched to review the available technical information and methods and identify areas in need of further work. A substantial effort was made to involve public and industry representatives throughout the entire effort. A series of public meetings was held with stakeholders during and following the generation of a preliminary draft study that was published in June at the request of the Nuclear Energy Institute (NEI). The partially completed DRAFT report was released to facilitate an industry/NRC/public 2 day workshop that was held in July, 1999. Information gained at the workshop and through other stakeholder interactions was constructive in completing the report.

Estimates of the risk from heavy load handling accidents were revised and criticality concerns were addressed in response to stakeholder feedback. A checklist was developed to establish seismic capability of SFPs, and industry commitments were documented to address the vulnerabilities that had been identified by the June, 1999 draft report. Independent technical quality reviews of controversial aspects of the report were initiated to bring in outside expert opinion on the details of the report. These experts evaluated several areas of the report, including the human reliability analysis, seismic considerations, thermal-hydraulic calculations, and PRA assumptions and treatment. The PRA results were requantified to take into account the industry commitments to reduce risk vulnerabilities.

This report contains the results of our effort. It includes three main outputs. The first is a discussion in Chapter 2 on how risk informed decision making is being applied to decommissioning plants. The second is a summary of the risk assessment of SFPs at decommissioning plants in Chapter 3. The third provides the implications of SFP risk on

L see page 4

regulatory requirements in Chapter 4, and outlines where an industry initiative may be useful in improving the generic study.

As described in Chapter 2, a pool performance guideline (PPG) for frequency of zirconium fires has been developed and proposed based upon the numerical guidelines incorporating large early release frequency (LERF) as described in Regulatory Guide (RG) 1.174 [Ref. 1]. In a letter dated November 12, 1999 [Ref. 2], the ACRS suggested that the end state of uncovery of top of fuel was an appropriate PRA surrogate for zirconium fire frequency, and that comparison with LERF would be acceptable for risk-informed decision making, even though the correlation is not perfect.

The risk estimates contained in Chapter 3 demonstrate that a zirconium fire can occur during an extended period after shutdown (up to five years), depending on fuel burnup and rack configurations, if fuel uncovery were to occur. The consequences of such an event would be severe. However, the requantified PRA demonstrates that if operation of the decommissioned plant is carried out in accordance with the commitments proposed by the industry and the other constraints outlined in this report are followed, such as the seismic check list, then the pool performance guideline frequency of less than 1×10^{-6} per year can be met.

Chapter 4 points out that when the numerical risk analysis results and other safety principles as described in RG 1.174 are taken into account, such as defense in depth, maintaining safety margins, and performance monitoring, the staff has concluded that after one year following final shutdown, there is reasonable assurance that a zirconium fire will not occur such that the emergency planning requirements can be relaxed to a minimum baseline level. Any future reduction of the one year critical decay time would be contingent on plant specific thermal hydraulic response, scenario timing, human reliability results and system mitigation and recovery capabilities. That is, any licensee wishing to gain relief from the EP requirements prior to the one year post-shutdown, would need to demonstrate that plant specific vulnerability to a zirconium fire satisfies the risk informed decision process, risk insights and recommended criteria described in Chapters 2 and 3. Chapter 4 also covers the need for continued indemnification requirements while the threat of a zirconium fire exists, and offers the possibility that an industry initiative to improve the thermal-hydraulic calculational methodology could result in shortening the generic 5 year window of vulnerability. And finally, Chapter 4 includes a discussion on how the risk insights contained in this report can by employed to assess the vulnerabilities to sabotage, and concludes that any reduction in security provisions would be constrained by the target set, such that some level of security is required as long as the fuel in the SFP is exposed to a sabotage threat.

In summary, this report provides the basis for determining the regulatory requirements for decommissioning plants using risk-informed decision making. It recognizes that some aspects of the regulations such as 10 CFR 20 [Ref. 3] are not amenable to this kind of analysis. However, it provides an authoritative and definitive treatment of SFP risk at decommissioning plants as it relates to emergency planning, insurance, and security requirements, and can be extrapolated to other appropriate areas of consideration such as shift staffing and fitness for duty. And finally, it points out other areas of consideration for bringing coherency to future rulemaking.

(4) #1 pg

Chapter - 1 - 2

Formatted Version, Rev. 5 1/19/00 1600 hours

1. Introduction

The current body of NRC regulations pertaining to light-water reactors (10 CFR 50) [Ref. 1] is primarily directed towards the safety of operating units. As some reactors have reached permanent shutdown condition and entered decommissioning status, industry and the NRC have been faced with establishing the appropriate requirements and regulatory oversight necessary to provide adequate protection to the public.

Decommissioning plants have requested exemptions to certain regulations as a result of their permanently defueled condition. Areas where regulatory relief has been requested in the past include exemptions from offsite emergency planning (EP) requirements, Price-Anderson insurance provisions and physical security. Requests for consideration of changes in regulatory requirements are appropriate since the traditional accident sequences that dominate operating reactor risk are no longer applicable. For a defueled reactor in decommissioning status, public risk is predominantly from accidents involving spent fuel. These fuel assemblies can be stored in the spent fuel pool for considerable periods of time, as remaining portions of the plant continue through decommissioning and disassembly. To date, exemptions have been requested and granted on a plant-specific basis. This has resulted in some lack of consistency and uniformity in the scope of evaluations conducted and acceptance criteria applied in processing the exemption requests.

To improve regulatory consistency and predictability, the NRC has undertaken this effort to develop a regulatory framework applicable to decommissioning plants. This framework will utilize risk informed approaches to identify the design and operational features necessary to ensure that risks to the public from these shutdown facilities are sufficiently small. This framework will form the foundation upon which regulatory changes will be developed, as well as the basis for requesting and approving exemption requests in the interim, until the necessary rulemaking is completed.

In support of this objective, the NRC staff has completed a draft assessment of spent fuel pool risks. This assessment utilized probabilistic risk assessment (PRA) methods (applying both quantitative and qualitative insights) and was developed from analytical studies in the areas of thermal hydraulics, core physics, systems analysis, human reliability analysis, seismic and structural analysis and external hazards assessment. The focus of the risk assessment was to identify potential accident scenarios at decommissioning plants, and to estimate the likelihood and consequences of these scenarios. Of primary concern are events that lead to loss of spent fuel pool water inventory or loss of cooling to the spent fuel assemblies, and events that result in fuel configurations that could lead to criticality conditions. For some period after reactor shutdown and upon loss of inventory or cooling, it is possible for the fuel to heat up to the point where rapid oxidation and burning of the fuel cladding occurs leading to significant releases of radionuclides.

A preliminary version of this draft report was issued for public comment and technical review in June 1999. Comments received from stakeholders and other technical reviewers have been considered in preparing the present assessment. Quality assessment of the staff's preliminary analysis has been aided by a small panel of HRA experts who evaluated the human

performance analysis assumptions, methods and modeling, as well as a broad quality review carried out at the Idaho National Engineering & Environmental Laboratory (INEEL).

The conclusions and findings of the study provide guidance for the design and operation of spent fuel pool cooling and inventory make-up systems as well as practices and procedures necessary to ensure high levels of operator performance during off-normal conditions. This report concludes that with the imposition of voluntary industry initiatives and some additional staff requirements, the risks from spent fuel pools will be sufficiently small, to justify exemptions from selected current regulatory requirements and to form the basis for related rulemaking.

summary? see page 1

a summary (sec 3.3)

This report ~~contains~~ is divided into three main parts. The first part is a discussion in Chapter 2 on how risk informed decision making can be applied to decommissioning plants. In Chapter 3, the staff presents the risk assessment conducted on the SFPs for decommissioning plants. In Chapter 4 of this report, the findings of SFP risk for a decommissioning plant will be assessed against each of the safety principles and objectives discussed above.

2.0 Risk Informed Decision Making

The regulatory framework developed for decommissioning plants is based on a risk informed process. In 1995, the NRC published its PRA policy statement [Ref 1], which stated that the use of PRA technology should be increased in all regulatory matters to the extent supported by the state-of-the-art of the methods. Probabilistic risk assessment provides a structured analytical method to assess the various combinations of failures and events that result in undesirable consequences, for example such as core damage in an operating reactor. Related aspects of these methods can go on to assess the timing and mode of containment failure, radioactive releases to the environment and postulated health effects.

Subsequent to issuance of the PRA Policy Statement, the agency published Regulatory Guide (RG) 1.174 [Ref.2] which contained general guidance and criteria for application of PRA to the regulation of nuclear reactors. The criteria in RG 1.174 pertain to the frequency of core damage accidents (CDF) and large early releases (LERF). For both CDF and LERF, RG 1.174 contains guidance on acceptable values for the changes that can be allowed due to regulatory decisions as a function of the baseline frequencies. For example, if the baseline CDF for a plant is below 1E-4 per year, plant changes can be approved which increase CDF by up to 1E-5 per year. If the baseline LERF is less than 1E-5 per year, plant changes can be approved which increase LERF by 1E-6 per year.

For decommissioning plants, the risk is due primarily to the possibility of a zirconium fire associated with the spent fuel rod cladding[1]. The consequences of such an event do not equate exactly to either a core damage accident or a large early release[2]. Zirconium fires in

---

[1]See chapter 3 for more complete discussion of fuel pool risk scenarios

[2]RG 1.174 describes LERF as the frequency of unmittaged releases that have the potential for early health effects, in a time frame prior to effective evacuation of close-in population

spent fuel pools potentially have more severe consequences than an operating reactor core damage accident, because there are multiple cores involved, and because there is no containment surrounding the SFP to mitigate the consequences. On the other hand, they are somewhat different than a large early release, because the accidents progress slowly enough to allow ample warning for offsite protective actions, and because the absence of Iodine isotopes leads to fewer prompt fatalities. As a result, the criteria of RG 1.174 cannot be applied directly to the risk of a decommissioning plant without further thought.

Even though the event progresses more slowly than an operating reactor Large Early Release event and the isotopic makeup is somewhat different, the risk assessment consequence calculations performed by the staff[3] show that large inventories of radioisotopes could be released that could have significant late health effects (latent cancers) for the population at some distance from the plant, as well as the potential for a small number of early health effects (fatalities). The staff has therefore decided that the end state and consequences of a spent fuel pool fire are sufficiently severe that the RG 1.174 LERF baseline criteria of 1E-5 per year (the value of baseline risk above which the staff will only consider very small increases in risk) provides an appropriate frequency criteria for a decommissioning plant SFP risk, and a useful tool to assess features, systems and operator performance needs of a decommissioning ~~pool~~. plant The staff therefore proposes this as the recommended pool performance guideline (PPG) for baseline zirconium fire frequency. The additional RG 1.174 recommended criteria of a LERF change not to exceed 1E-6 per year, is also an appropriate measure to assess proposed changes to regulatory requirements on a decommissioning plant that are amenable to and result in increases to large release frequency.

2.1 Principles of Regulatory Guide 1.174

As discussed in RG 1.174, the results of quantitative risk assessment is only one tool utilized in risk informed decision making. The RG articulates the following safety principles which should be applied to the decommissioning case:

- The proposed change meets the current regulations unless it is explicitly related to a requested exemption or rule change, i.e., a "specific exemption" under 10 CFR 50.12 or a "petition for rulemaking" under 10 CFR 2.802.
- The proposed change is consistent with the defense-in-depth philosophy.
- The proposed change maintains sufficient safety margins.
- When proposed changes result in an increase in core damage frequency and/or risk, the increases should be small and consistent with the intent of the Commission's Safety Goal Policy Statement
- The impact of the proposed change should be monitored using performance measurement strategies.

---

[3]See Appendix 4 for consequence and health impact assessment

While the focus on RG 1.174 was decision-making regarding changes to the licensing basis of an operating plant, the same risk-informed philosophy can be applied to rulemaking for decommissioning plants or to consider potential exemptions to current requirements. The intent and scope of these safety principles are discussed below. However, since the application of this study specifically relates to exemptions to a rule or a rule change for decommissioning plants, a discussion of the first principle regarding current regulations is not necessary nor is it provided. A discussion on how these principles are satisfied as demonstrated by the staff's safety assessment is provided in Chapter 4.

2.1.1 Defense-in-Depth

The defense-in-depth philosophy applies to the operation of the spent fuel pool, whether at an operating plant or in a decommissioning plant. In accordance to the Commission White Paper on Risk-Informed Regulation (March 11, 1999), "Defense-in-depth is an element of the NRC's Safety Philosophy that employs successive compensatory measures to prevent accidents or mitigate damage if a malfunction, accident, or naturally caused event occurs at a nuclear facility. The defense-in-depth philosophy ensures that safety will not be wholly dependent on any single element of the design, construction, maintenance, or operation of a nuclear facility. The net effect of incorporating defense-in-depth into design, construction, maintenance and operation is that the facility or system in question tends to be more tolerant of failures and external challenges.

Therefore, application of dense-in depth could mean that there is more than one source of cooling water or that pump makeup can be provided by both electric as well as direct drive diesel pumps. Additionally, defense in depth can mean that even if a serious outcome (such as fuel damage) occurs, there is further protection such as containment to prevent radionuclide releases to the public. However, implementation of defense in depth for SFPs is different from that applied to nuclear reactors because of the different nature of the hazards. Because the essentially quiescent (low temperature, low pressure) initial state of the spent fuel pool and the long time available for taking corrective action associated with most release scenarios provide significant safety margin, a containment structure is not considered necessary as an additional barrier to provide an adequate level of protection to the public. Likewise, the long evolution of most SFP accident scenarios allows for reasonable human recovery actions to respond to system failures. The specific design and operational features of the SFP, industry commitments and staff requirements that ensure that SFP defense in depth is maintained, is provided in Chapter 4.

2.1.2 Safety Margins

A safety margin can relate to the difference between the expected value of some physical parameter (temperature, pressure, stress, reactivity) and the point at which adequate performance is no longer assured. For example a containment pressure calculation that shows a peak accident pressure of 40 psig is reached for a structure which has a design capability of 60 psig and an actual ultimate capability of 110 psig. In this case there is margin from the accident calculation of 20 psig to the design limit as well as a large margin of 70 psig to the actual expected failure limit.

(31) #198

Chapter 3

The safety margins associated with fuel in the spent fuel pool for many physical processes and parameters are much greater than those associated with an operating reactor. The spent fuel pool is in a quiescent state, at or near ambient temperature and pressure. The decay heat levels are much lower than those of the fuel in an operating reactor. This allows much greater time for heating and boil off of the coolant water, and for heat up of the fuel itself, once uncovered. The fuel is covered with approximately 28 feet of water at near ambient temperature. The pool is designed with ample margin to criticality, using both passive (geometry) and active (poisons) means of reactivity control. Chapter 4 describes how the provisions that ensure the SFP maintains adequate margins in a decommissioning plant.

2.1.3 Impact of Proposed Changes

The impact of the proposed change should be small. As discussed above, the staff is applying the pool performance guideline (PPG) of $1x10^{-5}$ per year frequency for zirconium fire; which was developed from the treatment for LERF in RG 1.174. This PPG is used to assess the impact and acceptability of SFP risk in decommissioning plants. Chapters 3 and 4 discusses the design and operational characteristics of the SFP that must be relied upon to produce the low baseline risk results. These are identified in the context of industry commitments as well as additional staff requirements.

2.1.4 Implementation and Monitoring Program

RG 1.174 states that an implementation and monitoring plan should be developed to ensure that the engineering evaluation conducted to examine the impact of the proposed changes continues to reflect the actual reliability and availability of structures, systems, and components (SSCs) that have been evaluated. This will ensure that the conclusions that have been drawn will remain valid.

Therefore, with respect to all the above safety principles, implementation and monitoring of important considerations might include comparing a check list against the spent fuel pool seismic design and construction, control of heavy load movements, development and implementation of procedures and other provisions to ensure human reliability, monitoring the capability, reliability, and availability of important equipment, and checking effectiveness of onsite emergency response, and the plans for communication with offsite authorities. In many areas the implementation and monitoring may already be accomplished by utility programs such as those developed under the maintenance rule [Ref. 3]. Chapter 4 discusses the additional implementation and monitoring activities that are necessary to achieve the low SFP risk estimates of this report and support the safety principles.

3.0 Risk Assessment of Spent Fuel Pools at Decommissioning Plants

As discussed in Section 1 of this paper, the risks and vulnerabilities from a decommissioning plant are very different from an operating reactor. Once fuel is permanently removed from the reactor vessel, the primary public risk in a decommissioning facility is associated with the spent fuel pool. The spent fuel assemblies are retained in the storage pool, and are submerged in water both to provide cooling of the fuel's remaining decay heat as well as to provide shielding

for the radioactive assemblies. The most severe accidents postulated for SFPs are associated with the loss of water (either through boil off or draining) from the pool.

Depending on the time since reactor shutdown and fuel rack configurations, there may be sufficient heat to cause the clad to heat up, swell and burst. The breach in the clad could result in the release of radioactive gases present in the gap between the fuel and clad, called "a gap release" (See Appendix 1). If the fuel continues to heat up, the temperature of the zirconium clad will reach the point of rapid oxidation in air. This reaction of zirconium and air is exothermic. The energy released from the reaction combined with the decay energy can cause the reaction to become self-sustaining and lead to the ignition of the zirconium, or a "zirconium fire." The increase in heat from the oxidation reaction could also raise the temperature in adjacent fuel assemblies and cause the propagation of the oxidation reaction. This zirconium fire will result in a significant release of the fission products contained in the spent fuel, which will be dispersed from the reactor site due to the thermal plume from the zirconium fire. Consequence assessments (Appendix 4) have shown that such a zirconium fire could have significant latent health effects (cancers) as well as the possibility of a small number of early fatalities. Gap releases for fuel of a year or more post shutdown in and by themselves (without zirconium fire) release only moderately small quantities of radionuclides and would only be of concern for onsite effects.

Based upon the preceding insights the staff conducted its risk evaluation to focus on the likelihood of scenarios that could result in loss of pool water and fuel heat up to the point of rapid oxidation. Since the decay time at which air cooling alone is sufficient to prevent zirconium fire is very plant specific, the cut off time (when a zirconium fire can no longer occur) for this risk assessment cannot be pre-determined. Rather, the insights should be considered as generally applicable to a decommissioning plant until it reaches a point where rapid oxidation will not occur with complete loss of water. After a decay period that precludes fuel heat up to zirconium fire conditions, no significant risk remains from storage of the spent fuel. Preliminary calculations by the staff (see Appendix 1) show this time will vary depending on fuel burn up, SFP storage configuration and loading pattern of the assemblies, and could occur at a period as long as five years from plant shutdown.

In order to support the risk evaluation, the staff conducted a thermal hydraulic assessment of the SFP for various scenarios such as loss of pool cooling and loss of inventory. These calculations provided information on heat up and boil off rates for the pool, as well as heat up rates for the uncovered fuel assemblies and timing to initiation of zirconium fire for a number of scenarios and sequences. The results of these calculations provided fundamental information on the timing of accident sequences and provided insights on the time available to recover from events and time available to initiate offsite measures, if necessary. This information was then utilized in the risk assessment to support the human reliability analysis used to assess the likelihood of recovering level or cooling before a zirconium fire occurs.

For these calculations, the end state assumed for the accident sequences was when the water level reached the top of the fuel assemblies, rather than calculating the temperature response of the fuel as the level gradually drops. This simplification was utilized because of the extremely complex heat transfer mechanisms and chemical reactions occurring in the fuel assemblies. This analytical approach understates the time that is available for possible operator recovery of

SFP events prior to initiation of zirconium fire. However, since the recoverable events such as small loss of inventory or loss of power/pool cooling, are very slowly evolving events, many days are generally available for recovery whether top of fuel uncovery is the end point of the analysis, or is total fuel uncovery. The extra time available (estimated to be in the tens of hours) as the water level boils down the assemblies, would not impact the very high probabilities of operator recovery from these events given the industry commitments and additional staff requirements. In its letter of November 12, 1999 [Ref. 1], the Advisory Committee on Reactor Safeguards (ACRS) recommended that the end state of top of fuel uncoverey be used for the SFP analysis along with application of the LERF criteria discussed in Chapter 2. The staff agrees with this recommendation. However, there are some exceptions noted in our response to the ACRS. The details of the staff thermal hydraulic assessment are provided in Appendix 1. where is this. Ref

Previous to the staff's preliminary risk assessment, the most extensive work to date was in support of Generic Safety Issue (GSI) 82, "Beyond Design Basis Accidents for Spent Fuel Pools" [Ref. 2]. This report assessed the risk for operating reactors and concluded that a seismic event was the dominant initiating event for the loss of inventory.

While the staff drew from the GSI 82 work in its assessment, it was concluded that because of significant differences between operating and decommissioning plant spent fuel pools cooling systems, a complete assessment of SFP risk should be conducted, considering all potentially significant initiators, and reflecting the unique features found in a shutdown facility. The results of the staff assessments are discussed below. A summary of industry commitments, staff recommendations (relied upon in the risk assessment) and a discussion of how the decision criteria in Chapter 2 are satisfied is discussed in Chapters 3 and 4. Conclusions on how the SFP risk insights and decision criteria apply to potential changes in emergency planning, insurance, and physical security are also discussed in Chapter 4.

3.1 Basis and Findings of SFP Risk Assessment

In order to follow the framework for the regulatory decision process described in Chapter 1, a comprehensive assessment of SFP risk was necessary. To gather information on SFP design and operational characteristics for the preliminary risk assessment done for the June 1999 draft report, the staff conducted site visits to four decommissioning plants to ascertain what would be an appropriate model for decommissioning spent fuel pools. The site visits confirmed that the as operated spent fuel pool cooling systems were very different than those in operation when the plants were operating reactors. Modeling information was determined from both site system walkdowns as well as limited discussions with the decommissioning plant staff. Since limited information was available for the preliminary assessment on procedural and recovery activities as well as what the minimum configuration a decommissioning plant might have, a number of assumptions and bounding conditions were assumed for the June 1999 preliminary study. These preliminary results have been refined in this draft assessment after obtaining improved information from industry on SFP design and operating characteristics for a decommissioning plant, as well as a number of commitments that contribute to achieving low risk findings from SFP incidents. These revised results also reflect improvements in the PRA model since publication of the June 1999 report.

The staff identified the following nine initiating event categories to investigate as part of the quantitative risk assessment on SFP risk:

- Loss of Offsite Power from plant centered and grid related events
- Loss of Offsite Power from events initiated by severe weather
- Internal Fire
- Loss of Pool Cooling
- Loss of Coolant Inventory
- Seismic Event
- Cask Drop
- Aircraft Impact
- Tornado Missile

In addition a qualitative risk perspective was developed for inadvertent re-criticality in the SFP.

The risk model as developed by the staff, and supplemented through a quality review from Idaho National Engineering & Environmental Laboratory (INEEL) is provided in Appendix 2. Appendix 2 include the modeling details for the cask drop, aircraft impacts, seismic and tornado missile assessments. Input and comments from stakeholders ~~was~~ were also utilized in updating the June 1999 preliminary model to the present draft model.

3.2 Characteristics of SFP Design and Operations for a Decommissioning Plant

Based upon information gathered from the site visits and interactions with NEI and other stakeholders the staff has modeled the spent fuel pool cooling system (SFPC) (see Figure 3.1 ~~on next page~~) as being located in the spent fuel pool (SFP) area and consisting of motor-driven pumps, a heat exchanger, an ultimate heat sink, a makeup tank, filtration system and isolation valves. Luster

Suction is taken via one of the two pumps on the primary side from the spent fuel pool and is passed through the heat exchanger and returned back to the pool. One of the two pumps on the secondary side rejects the heat to the ultimate heat sink. A small amount of water from the suction line is diverted to the filtration process and is returned back into the discharge line. A manually operated makeup system (limited volumetric flow rate) supplements the small losses due to evaporation. In the case of prolonged loss of SFPC system or loss of inventory events, the inventory in the pool can be made up using the firewater system. There are two firewater pumps, one motor-driven (electric) and one diesel-driven, which provide firewater in the SFP area. A firewater hose station is provided in the SFP area. The firewater pumps are located in a separate structure.

Based upon information obtained during the site visits and discussions with the operating staff's during those visits, the staff also made the following assumptions that are believed to be representative of a typical decommissioning facility:

- The site has two operable firewater pumps, one diesel-driven and one electrically-driven from offsite power.

- We assume the makeup capacity (with respect to volumetric flow) to be as follows:

Make-up pump:	20 - 30 gpm
Firewater pump:	100 - 200 gpm
Fire engine:	100 - 250 gpm [depending on hose size: 1-½" (100 gpm) or 2-½" (250 gpm)]

  We therefore assumed that for the larger loss-of-coolant inventory accidents, water addition through the makeup pumps does not successfully mitigate the loss of inventory event unless the source of inventory loss is isolated.

- The fuel handlers perform walkdowns of the SFP area once per shift (8- to 12-hour shifts). A different crew member is assumed for the next shift. We also assumed that the SFP water is clear and pool level is observable via a measuring stick in the pool that can alert fuel handlers to level changes.

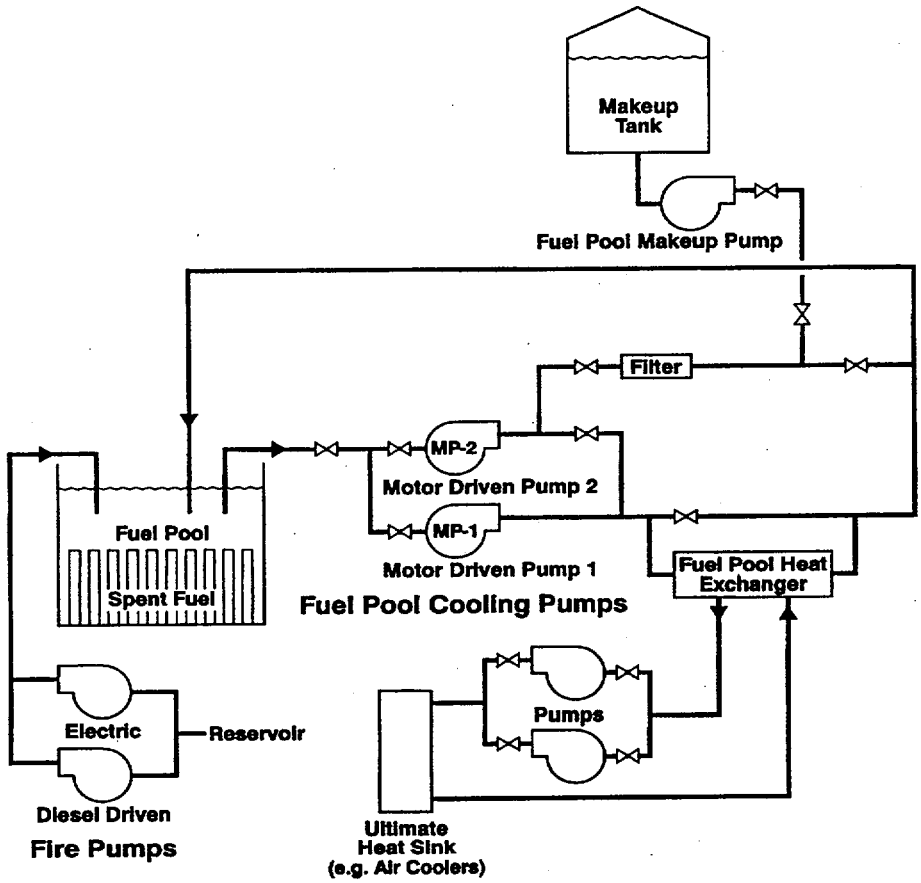

Figure 3.1 Assumed Spent Fuel Pool Cooling System

Based upon the results of the June 1999 preliminary risk analysis and its associated sensitivity cases, it became clear that many of the risk sequences were quite sensitive to the performance of the SFP operating staff in identifying and responding to off normal conditions. This is due to the fact that the remaining systems in the SFP Island are relatively simple with manual rather than automatic initiation of backups or realignments. Therefore, if scenarios such as loss of cooling or inventory loss to the pool occurs, operator response to diagnose the failures and bring on site and off site resources to bear are instrumental for ensuring that the fuel assemblies remain cooled and a zirconium fire is prevented.

As part of its technical evaluations the staff assembled a small panel of experts which identified the attributes necessary to achieving very high levels of human reliability for responding to potential accident scenarios in a decommissioning plant SFP. (See HRA Study in Appendix 2a).

Upon consideration of the sensitivities identified in the staff's preliminary study and to reflect actual operating practices at many decommissioning facility, the nuclear industry, through NEI made important commitments (located in Appendix 6) which were reflected in the staff's updated risk assessment. The revisions to the risk assessment generally reflected changes of assumptions in the areas shown below. The applicability of the specific decommissioning industry commitments (DICs) with respect to the risk analysis results are discussed later in this chapter. How the commitments relate to specific risk conclusions and safety principles is also discussed in Chapter 4.

DIC #1 Cask drop analyses will be performed or single failure proof cranes will be in use for handling of heavy loads (i.e., phase II of NUREG 0612 will be implemented)

DIC #2 Procedures and training of personnel will be in place to ensure that on site and off site resources can be brought to bear during an event.

DIC #3 Procedures will be in place to establish communication between on site and off site organizations during severe weather and seismic events.

DIC #4 An off site resource plan will be developed which will include access to portable pumps and emergency power to supplement on site resources. The plan would principally identify organizations or suppliers where off site resources could be obtained in a timely manner.

DIC #5 Spent fuel pool instrumentation will include readouts and alarms in the control room (or where personnel are stationed) for spent fuel pool temperature, water level, and area radiation levels.

DIC #6 Spent fuel pool seals that could cause leakage leading to fuel uncovery in the event of seal failure shall be self limiting to leakage or otherwise engineered so that drainage cannot occur.

DIC #7 Procedures or administrative control to reduce the likelihood of rapid drain down events will include (1) prohibitions on the use of pumps that lack adequate siphon protection or (2) control for pump; suction and discharge points. The functionality of anti-siphon devices will be periodically verified.

DIC #8 An on site restoration plan will be in place to provide repair of the spent fuel pool cooling systems or to provide access for makeup water to the spent fuel pool. The plan will provide for remote alignment of the makeup source to the spent fuel pool without requiring entry to the refuel floor.

DIC #9 Procedures will be in place to control spent fuel pool operations that have the potential to rapidly decrease spent fuel pool inventory. These administrative controls may require additional operations or management review, management physical presence for designated operations or administrative limitations such as restrictions on heavy load movements.

DIC #10 Routine testing of the alternative fuel pool makeup system components will be performed and administrative controls for equipment out of service will be implemented to provide added assurance that the components would be available, if needed.

Based upon the above design and operational features, industry commitments, technical comments from stakeholders and the input from the INEEL technical review, the staff's SFP risk model was updated. The results for the initiators which were assessed quantitatively are shown in Table 3.1 below.

Table 3.1 Spent Fuel Pool Cooling Risk Analysis Frequency of Fuel Uncovery (per year)

INITIATING EVENT	Frequency of Fuel Uncovery
Loss of Offsite Power - Plant centered and grid related events	3.0E-08
Loss of Offsite Power - Events initiated by severe weather	1.3E-07
Internal Fire	4.5E-08
Loss of Pool Cooling	1.4E-08
Loss of Coolant Inventory	3.1E-09
Seismic Event	<3.0E-06[4]

[4]This contribution includes seismically induced catastrophic failure of the pool (which dominates the results) and a small contribution form seismically induced failure of pool support systems

Cask Drop	2.2E-07[5]
Aircraft Impact	2.9E-09
Tornado Missile	<1.0E-09
Total	<3.4E-06

This table summarizes the core uncovery frequency for each accident sequence. The frequencies are point estimates, based on the use of point estimates for the input parameters. For the most part these input parameter values would be used as the mean values of the probability distributions that would be used in a calculation to propagate parameter uncertainty. Because the systems are essentially single train system, the point estimates therefore closely correlate to the mean values that would be obtained from a full propagation of parameter uncertainty.

The above results show that the estimated frequency for a zirconium fire is approximately 3E-06 per year, with the dominant contributions being from severe seismic events.

The various initiating event categories are discussed briefly below. The staff qualitative risk insights on the potential for SFP criticality are discussed at the end of this chapter.

3.3 Internal Event Scenarios Leading to Fuel Uncovery

The following summary is a description ~~of accident for~~ each internal accident event initiator: Details of the assessment are provided in Appendix 2.

3.3.1 Loss of Cooling

The loss of cooling initiating event may be caused by the loss of coolant system flow from the failure of pumps or valves (See Figure 3.0-1), from piping failures, from an ineffective heat sink (e.g., loss of heat exchangers), or from a local loss of power (e.g., electrical connections.) While it may not be directly applicable due to design differences in a decommissioning plant, operational data from NUREG-1275, Volume 12 [Ref. 3] shows that the frequency of loss of spent fuel pool cooling events in which a temperature increase of more than 20°F occurred can be estimated to be on the order of two to three events per 1000 reactor years. The data also showed that, for the majority of events, the duration of the loss of cooling was less than one hour. Only three events exceeded 24 hours, with the maximum duration being 32 hours. There were four events where the temperature increase exceeded 20°F, with the maximum increase being 50°F.

The calculated fuel uncovery frequency for this initiating event is 1.4×10^{-8} per year. To have

[5]For a single failure proof system without a load drop analysis. For plants where load drop analyses have been performed, the frequency should be less than this value even for non single failure proof cranes.

fuel uncovery, the plant operators would have to fail to recover the cooling system (either fails to notice the loss of cooling indications, or fails to repair or restore the cooling system). In addition, the operators would have to fail to provide makeup cooling using other onsite sources (e.g., fire pumps) or offsite sources (e.g., use of a fire brigade). For these recovery actions, there is a lot of time available. In the case of 1-year-old fuel (i.e., fuel that was in the reactor when it was shutdown one year previously),approximately 130 hours is available. Indications of a loss of pool cooling that are available to operators include: control room alarms and indicators, local temperature measurements, and eventually increasing area temperature and humidity and low pool water level from boiloff.

Based on the assumptions made, the frequency of core uncovery is to be very low. A careful and thorough adherence to DICs 2, 5, 8 and 10 is crucial to establishing the low frequency. In addition, however, the assumption that walkdowns are performed on a regular, (once per shift) basis is important to compensate for potential failures to the instrumentation monitoring the status of the pool. The analysis has also assumed that the procedures and/or training are explicit in giving guidance on the capability of the fuel pool makeup system, and when it becomes essential to supplement with alternate higher volume sources. The analysis also assumed that the procedures and training are sufficiently clear in giving guidance on early preparation for using the alternate makeup sources.

The additional requirement of walkdowns being performed at least once per shift.
is identified by the staff as a decommissioning staff requirement (DSR #1). In addition, this DSR includes the requirement for explicit procedures and operator training which provide guidance on the capability and availability of inventory makeup sources and the time available to initiate these sources.

3.3.2 Loss of Coolant Inventory

This initiator includes loss of coolant inventory from events such as those resulting from configuration control errors, siphoning, piping failures, and gate and seal failures. Operational data provided in NUREG-1275, Volume 12 show that the frequency of loss of inventory events in which a level decrease of more than one foot occurred can be estimated to be (on the order of) less than one event per 100 reactor years. Most of these events are as a result of fuel handler error and are recoverable. NUREG-1275 shows that, except for one event that lasted for 72 hours, there were no events that lasted more than 24 hours. Eight events resulted in a level decrease of between one and five feet, and another two events resulted in an inventory loss of between five and 10 feet.

Using the information from NUREG-1275, it can be estimated that 6% of the loss of inventory events will be large enough and/or occur for a duration that is long enough so that isolation of the loss is required if the only system available for makeup is the spent fuel pool makeup system. For the other 94% of the cases, operation of the makeup pump is sufficient to prevent fuel uncovery.

The calculated fuel uncovery frequency for loss of inventory events is 3.1×10^{-9} per year. Fuel uncovery occurs if plant operators fail to initiate inventory makeup either by use of onsite

sources such as the fire pumps or offsite sources such as the fire brigade. In the case of a large leak, insolation of the leak would also be necessary if the make-up pump are utilized. The time available for operator action is considerable, and even in the case of a large leak, it is estimated that 40 hours will be available. Operators will be alerted to a loss of inventory condition by control room alarms and indicators, visibly decreasing water level in the pool, accumulation of water in unexpected locations and local alarms (radiation alarms, building sump high level arms, ect.).

As in the case for the loss of pool cooling, the frequency of core uncovery can be seen to be very low. Again a careful and thorough adherence to DICs 2, 5, 8 and 10 is crucial to establishing the low frequency. In addition, however, the assumption that walkdowns are performed on a regular, (once per shift) basis is important to compensate for potential failures to the instrumentation monitoring the status of the pool, the assumption that the procedures and/or training are explicit in giving guidance on the capability of the fuel pool makeup system, and when it becomes essential to sup0plement with alternate higher volume sources, the assumption that the procedures and training are sufficiently clear in giving guidance on early preparation for using the alternate makeup sources, are crucial to establishing the low frequency. In addition, NEI commitments 6, 7 and 9 have been credited with lowering the initiating event frequency.

3.3.3 Loss of Offsite Power from Plant-Centered and Grid Related Events

Frequency of Fuel Uncovery

Scenario

A loss of offsite power from plant-centered events typically involve hardware failures, design deficiencies, human errors (in maintenance and switching), localized weather-induced faults (e.g., lightning), or combinations of these. Grid-related events are those in which problems in the offsite power grid cause the loss of offsite power. With offsite power lost (and therefore onsite power is lost too, since we assume there is no diesel generator available to pick up the necessary electrical loads), there is no effective heat removal process for the spent fuel pool. If power were not restored quickly enough, the pool will heat up and boil off inventory until the fuel is uncovered. The diesel-driven fire pump would be available to provide inventory makeup. If the diesel-driven pump fails, and if offsite power were not recovered in a timely manner, offsite recovery using fire engines is a possibility. With 1-year-old fuel (i.e., the youngest fuel in the fuel pool was shutdown in the reactor one year ago), 127 hours is available for this recovery action.

Even given recovery of offsite power, the plant operators have to restart the fuel pool cooling pumps. Failure to do this or failure of the equipment to restart will necessitate other operator recovery actions. Again, considerable time is available.

The calculated fuel uncovery frequency for this sequence of events is 3.0×10^{-8} per year. This frequency is very low, and similar to the cases for the loss of pool cooling and loss of inventory,

is based on adherence to NEI commitments 2, 5, 8, and 10. In addition, the performance of regular plant walkdowns, and the availability of clear and explicit procedures and operator training is assumed.

3.3.4 Loss of Offsite Power from Severe Weather Events

Frequency of Fuel Uncovery

This event represents the loss of SFP cooling resulting from a loss of offsite power from severe-weather-related events. Until offsite power is recovered, the electrical pumps would be unavailable and the diesel-driven fire pump would be available to only provide makeup. When compared to the loss of offsite power events from grid-related and plant-centered causes, recovery of offsite power in this case is assumed to be less probable. In addition, given the conditions, it would be more difficult for offsite help to assist the fuel handlers at the site than for an ordinary loss of offsite power event.

The calculated fuel uncovery frequency for this event is 1.3×10^{-7} per year. As in the previous cases, this estimate was based on NEI commitments and on requirements in DSR #1..

3.3.5 Internal Fire

This event tree models the loss of SFP cooling caused by internal fires. We assumed that there is no automatic fire suppression system for the SFPC area. The fuel handler may initially attempt to manually suppress the fire given that he responds to the control room or local area alarms. If the fuel handler fails to respond the alarm, or is unsuccessful in extinguishing the fire within the first 20 minutes, we assumed that SFPC system will be significantly damaged and cannot be repaired within a few days. Once the inventory level drops below the SFP cooling system suction level, the fuel handlers have about 85 hours to provide some sort of alternate makeup, either using the site firewater system or by calling upon offsite resources. It was assumed that fire damages the plant power supply system such that the power to the electrical firewater pump is lost and would not be available.

The calculated fuel uncovery frequency for this event is 4.5×10^{-8} per year. As in the previous cases, this estimate was based on NEI commitments 2,5,8 and 10 and on requirements in DSR #1. In addition, ;NEI commitment 3, related to establishing communication between onsite and offsite organizations during severe weather is also important.

3.3.6 Heavy Load Drops

The staff investigated the frequency of dropping a heavy load in or near the spent fuel pool, and investigated potential damage to the pool from such a drop. The previous assessment done for resolution of Generic Issue 82 (in NUREG/CR-4982 (Ref 5)) only considered the possibility of heavy load drop failing the pool wall. The assessment conducted for this study identified other failure modes, such as the pool floor, as also being credible for some sites. Details of the

heavy load evaluation can be found in Appendix 2. The analysis exclusively considered drops that were severe enough to catastrophically damage the spent fuel pool such that pool inventory would be lost rapidly and it would be impossible to refill the pool using onsite or offsite resources. In essence there is no possibility for mitigation in such circumstances, only prevention. A catastrophic heavy load drop(that caused a large leakage path in the pool) would lead directly to a zirconium fire approximately 10 to 12 hours after the drop, depending on fuel age, burn up, and configuration. The dose rates in the pool area prior to any zirconium fire would be on the order of tens of thousands of rem per hour, making any potential recovery actions such as temporary large inventory addition systems very difficult. The staff concluded that non-catastrophic damage to the pool or its support systems from a load drop is captured and bounded by other initiators.

Based on discussions with structural engineers, the staff assumed that only spent fuel shipping casks had sufficient weight to catastrophically damage the pool if dropped. We assumed there is very low likelihood that other heavy loads would be moved over the spent fuel pool, and in addition if there were a drop of one of these lighter loads over the spent fuel pool, there would be very low likelihood that it would cause catastrophic damage to the pool.

For a non-single failure proof load handling system that does not follow NUREG-0612 [Ref.4] guidelines, the likelihood of a heavy load drop (i.e., the drop frequency) was estimated, based on NUREG-0612 information, to have a mean value of 3.4×10^{-4} per year. The number of heavy load lifts was based on the NEI estimate of 100 spent fuel shipping cask lifts per year, which probably is an overestimate. For a single failure proof load handling system or a plant conforming to the NUREG-0612 guidelines, is estimated to have a mean value of 9.6×10^{-6} per year, again for 100 heavy load lifts per year but using new data from U.S. Navy crane experience. Once the load is dropped, the next question is whether the drop did significant damage to the spent fuel pool.

When estimating the failure frequency of the pool floor, the staff assumed that heavy loads physically travel near or over the pool approximately 13% of the total path lift length (the path lift length is the distance from the lift of the load to the placement of the load on the pool floor). The staff also assumed that the critical path length (the fraction of total path the load is lifted high enough above the pool that a drop could cause damage to the structure) is approximately 16% of the time the load is near or over the pool. The staff estimated the catastrophic failure rate from heavy load drops to have a mean value of 2.1×10^{-5} per year for a non-single failure proof system where reliance is placed on electrical interlocks, fuel handling system reliability, and safe load path procedures. The staff estimated the catastrophic failure rate from heavy load drops to have a mean value of 2.0×10^{-7} per year for a single failure proof system or a plant conforming to all NUREG-0612 guidelines.

When estimating the failure frequency of the pool wall, the staff assumed one-in-ten heavy load drop events (0.1) will result in significant damage to the wall. For the non-single failure proof handling system, the mean value for the failure rate is 2.1×10^{-6} per year and for the single failure proof handling system the mean value for the failure rate is 2.0×10^{-8} per year. For comparison, the frequency given in NUREG/CR-4982 [Ref. 5] for wall failure was 3.7×10^{-8} per year, for 204 lifts per year. For 100 lifts, the NUREG/CR-4982 value would be 1.5×10^{-8} per year, very comparable to the estimate in this assessment.

Put in body 1/31/00 3:20 DJK updated 9:45 1/28/00 DJK DJK 1/28/00 6:10

3.4.1 Seismic Events

When performing the evaluation of the effect of seismic events on spent fuel pools, it became apparent that the staff does not have detailed information on how all the spent fuel pools were designed and constructed. Therefore, the staff originally performed a simplified bounding seismic risk analysis in our June 1999 draft risk assessment to help determine if there might be a seismic concern. The analysis indicated that seismic events could not be dismissed on the basis of a simplified bounding approach. After further evaluation and discussions with stakeholders, it was determined that it would not be cost effective to perform a plant-specific seismic evaluation for each spent fuel pool. Working with our stakeholders, the staff developed other tools that help assure the pools are sufficiently robust.

Spent fuel pool structures at nuclear power plants are seismically robust. They are constructed with thick reinforced concrete walls and slabs lined with stainless steel liners 1/8 to 1/4 inch thick[1]. Pool walls vary from 4.5 to 5 feet in thickness and the pool floor slabs are around 4 feet thick. The overall pool dimensions are typically about 50 feet long by 40 feet wide and 55 to 60 feet high. In boiling water reactor (BWR) plants, the pool structures are located in the reactor building at an elevation several stories above the ground. In pressurized water reactor (PWR) plants, the spent fuel pool structures are located outside the containment structure supported on the ground or partially embedded in the ground. The location and supporting arrangement of the pool structures determine their capacity to withstand seismic ground motion beyond their design basis. The dimensions of the pool structure are generally derived from radiation shielding considerations rather than structural needs. Spent fuel structures at operating nuclear power plants are able to withstand loads substantially beyond those for which they were designed. Consequently, they have significant seismic capacity.

OK

During stakeholder interactions with the staff, the staff proposed the use of a seismic checklist, and in a letter dated August 18, 1999 (See Appendix 5), NEI proposed a checklist that could be used by any plant to show robustness for a seismic ground motion with a peak ground acceleration (PGA) of approximately 0.5g. This checklist was reviewed and enhanced by the staff. The staff has concluded that plants that satisfy the revised seismic checklist can demonstrate with reasonable assurance a high-confidence low-probability of failure (HCLPF)[2] at a ground motion that has a very small likelihood of exceedence.

U.S. nuclear power plants, including their spent fuel pools, were designed such that they can be safely shutdown and maintained in a safe shutdown condition if subjected to ground motion from an earthquake of a specified amplitude. This design basis ground motion is referred to as the safe shutdown earthquake (SSE). The SSE was determined on a plant specific basis consistent with the seismicity of the plant's location. In general, plants located in the eastern and central parts of the US, had lower amplitude SSE ground motions established for their designs than the plants located in the western parts of the US, which had significantly higher SSEs established for them because of the higher seismicity for locations west of the Rocky Mountains. As part of this study, the staff with assistance from Dr. Kennedy (See Appendix 5),

---

[1] Except at Dresden Unit 1 and Indian Point Unit 1, these two plants do not have any liner plates. They were decommissioned more than 20 years ago and no safety significant degradation of the concrete pool structure has been reported.

[2] The HCLPF value is defined as the peak seismic acceleration at which there is 95% confidence that less than 5% of the structure, system, or component will fail.

?

the time

reviewed the potential for spent fuel pool failures to occur in various regions in the U.S. due to seismic events with ground motion amplitudes exceeding established SSE values. Based on this review, and a review of the conservative nature of the SSE ground motion at most of the sites, it was determined that for sites east of the Rocky Mountains, seismic ground motions 3 times as large as the SSE values are considered to be as high as physically possible, considering the current tectonics. For plants west of the Rocky Mountains, which have higher SSE design values than those in the Central and Eastern U.S. (CEUS), it was determined that the maximum credible earthquake ground motions would be approximately twice their SSE values. These estimates of the maximum credible earthquake ground motion levels, which are based on the tectonics that exist in the different parts of the U.S., show extremely low probabilities associated with ground motions of these higher levels. Therefore, for the purpose of this study, it was assumed that seismic ground motions 3 times the SSE design values, at lower seismicity locations (CEUS sites), and 2 times the SSE design values, at higher seismicity locations (West Coast sites), are good estimates of the maximum credible seismic ground motions for these sites.

includes elements

The seismic component of risk can be limited if it can be demonstrated that there is a high confidence in a low probability of failure for seismic ground motion, greater than or equal to 2 times the SSE at higher seismicity sites and at 3 times the SSE at lower seismicity sites. Implicit in this is the assumption that pool structures are free from pre-existing degradation or other seismic vulnerabilities. The enhanced checklist ~~seeks~~ to assure there are no weaknesses in the design or construction of the pools that might make them vulnerable under earthquake ground motions several times higher than those of the site's. We note that spent fuel pool configuration, layout, and structural details vary considerably from one plant to another. Plants with spent fuel pools that fail the seismic check list would also fail the capacity goal appropriate for the area of the US that the pool is situated. The owner of these plants would need to conduct a detailed assessment of the seismically induced probability of failure of their spent fuel pool structures and components.

FOOTN

In his report dated October 1999 (Appendix 5), Dr. Kennedy estimated the spent fuel pool failure frequency for a plant with a HCLPF of 1.2g peak spectral acceleration, if sited at each of the 69 CEUS plant sites. For all but eight sites, the estimated failure frequency is less than 3 X 10^{-6} per year. Dr. Kennedy noted that this would be a conservative estimate for a plant meeting the checklist, because such plants would in fact exceed a HCLPF of 1.2g peak spectral acceleration, and because his method of calculation was conservative by 0 to 25%.

How do we reconcile this statement with the statement highlighted on the previous page? ie 0.5g vs 1.2g

The staff concludes that the frequency of spent fuel pool failure for a CEUS plant is acceptably low if the seismic capacity of its spent fuel pool structure is at least equal to 3 times the plant's SSE value, and the plant satisfies the seismic checklist proposed in NEI's December 13, 1999 letter (See Appendix 5). Although the risk has not been rigorously calculated for these sites, deterministic considerations lead the staff to conclude that peak ground accelerations in excess of 3 times SSE are not credible. For these sites the frequency of failure is bounded by 3×10^{-6} per year, and other considerations indicate the frequency may be significantly lower.

For those CEUS plants with spent fuel pool structures that do not pass the seismic checklist, a detailed evaluation of HCLPF would be necessary. Similarly, a detailed HCLPF would be necessary for all western plants since seismic capacity at the high levels of ground motion associated with the western plants are well above the generic HCLPF value of 1.2g peak spectral acceleration. For all CEUS plants which can demonstrate a HCLPF equal to 3 times their SSE, the risk is judged to be bounded by 3×10^{-6} per year. Similarly, for western sites

* Damage to critical SSCs does not correlate very well to PGA of the ground motion. However, damage correlates much better with the spectral acceleration of the ground motion over the natural frequency range of interest which is generally between 2.5 and 10Hz for the nuclear power plant SSCs. The spectral acceleration of 1.2g corresponds to the screening [illegible] in the reference document cited in the NEI check list and this spectral ordinate is [illegible] ground motion with 0.5g PGA.

which can demonstrate a HCLPF equal to 2 times their SSE, the risk is judged to be bounded by $3x10^{-6}$ per year.

seismic benchmark updated 9:45 1/25/00 JN 1/27/00 6:10

3.4.1 Seismic Events

When performing the evaluation of the effect of seismic events on spent fuel pools, it became apparent that the staff does not have detailed information on how all the spent fuel pools were designed and constructed. Therefore, the staff originally performed a simplified bounding seismic risk analysis in our June 1999 draft risk assessment to help determine if there might be a seismic concern. The analysis indicated that seismic events could not be dismissed on the basis of a simplified bounding approach. After further evaluation and discussions with stakeholders, it was determined that it would not be cost effective to perform a plant-specific seismic evaluation for each spent fuel pool. Working with our stakeholders, the staff developed other tools that help assure the pools are sufficiently robust.

Spent fuel pool structures at nuclear power plants are seismically robust. They are constructed with thick reinforced concrete walls and slabs lined with stainless steel liners 1/8 to 1/4 inch thick[1]. Pool walls vary from 4.5 to 5 feet in thickness and the pool floor slabs are around 4 feet thick. The overall pool dimensions are typically about 50 feet long by 40 feet wide and 55 to 60 feet high. In boiling water reactor (BWR) plants, the pool structures are located in the reactor building at an elevation several stories above the ground. In pressurized water reactor (PWR) plants, the spent fuel pool structures are located outside the containment structure supported on the ground or partially embedded in the ground. The location and supporting arrangement of the pool structures determine their capacity to withstand seismic ground motion beyond their design basis. The dimensions of the pool structure are generally derived from radiation shielding considerations rather than structural needs. Spent fuel structures at operating nuclear power plants are able to withstand loads substantially beyond those for which they were designed. Consequently, they have significant seismic capacity.

During stakeholder interactions with the staff, the staff proposed the use of a seismic checklist, and in a letter dated August 18, 1999 (See Appendix 5), NEI proposed a checklist that could be used by any plant to show robustness for a seismic ground motion with a peak ground acceleration (PGA) of approximately 0.5g. This checklist was reviewed and enhanced by the staff. The staff has concluded that plants that satisfy the revised seismic checklist can demonstrate with reasonable assurance a high-confidence low-probability of failure (HCLPF)[2] at a ground motion that has a very small likelihood of exceedence.

U.S. nuclear power plants, including their spent fuel pools, were designed such that they can be safely shutdown and maintained in a safe shutdown condition if subjected to ground motion from an earthquake of a specified amplitude. This design basis ground motion is referred to as the safe shutdown earthquake (SSE). The SSE was determined on a plant specific basis consistent with the seismicity of the plant's location. In general, plants located in the eastern and central parts of the US, had lower amplitude SSE ground motions established for their designs than the plants located in the western parts of the US, which had significantly higher SSEs established for them because of the higher seismicity for locations west of the Rocky Mountains. As part of this study, the staff with assistance from Dr. Kennedy (See Appendix 5),

---

[1] Except at Dresden Unit 1 and Indian Point Unit 1, these two plants do not have any liner plates. They were decommissioned more than 20 years ago and no safety significant degradation of the concrete pool structure has been reported.

[2] The HCLPF value is defined as the peak seismic acceleration at which there is 95% confidence that less than 5% of the structure, system, or component will fail.

reviewed the potential for spent fuel pool failures to occur in various regions in the U.S. due to seismic events with ground motion amplitudes exceeding established SSE values. Based on this review, and a review of the conservative nature of the SSE ground motion at most of the sites, it was determined that for sites east of the Rocky Mountains, seismic ground motions 3 times as large as the SSE values are considered to be as high as physically possible, considering the current tectonics. For plants west of the Rocky Mountains, which have higher SSE design values than those in the Central and Eastern U.S. (CEUS), it was determined that the maximum credible earthquake ground motions would be approximately twice their SSE values. These estimates of the maximum credible earthquake ground motion levels, which are based on the tectonics that exist in the different parts of the U.S., show extremely low probabilities associated with ground motions of these higher levels. Therefore, for the purpose of this study, it was assumed that seismic ground motions 3 times the SSE design values, at lower seismicity locations (CEUS sites), and 2 times the SSE design values, at higher seismicity locations (West Coast sites), are good estimates of the maximum credible seismic ground motions for these sites.

The seismic component of risk can be limited if it can be demonstrated that there is a high confidence in a low probability of failure for seismic ground motion, greater than or equal to 2 times the SSE at higher seismicity sites and at 3 times the SSE at lower seismicity sites. Implicit in this is the assumption that pool structures are free from pre-existing degradation or other seismic vulnerabilities. The enhanced checklist seeks to assure there are no weaknesses in the design or construction of the pools that might make them vulnerable under earthquake ground motions several times higher than those of the site's. We note that spent fuel pool configuration, layout, and structural details vary considerably from one plant to another. Plants with spent fuel pools that fail the seismic check list would also fail the capacity goal appropriate for the area of the US that the pool is situated. The owner of these plants would need to conduct a detailed assessment of the seismically induced probability of failure of their spent fuel pool structures and components.

In his report dated October 1999 (Appendix 5), Dr. Kennedy estimated the spent fuel pool failure frequency for a plant with a HCLPF of 1.2g peak spectral acceleration, if sited at each of the 69 CEUS plant sites. For all but eight sites, the estimated failure frequency is less than 3 X 10^{-6} per year. Dr. Kennedy noted that this would be a conservative estimate for a plant meeting the checklist, because such plants would in fact exceed a HCLPF of 1.2g peak spectral acceleration, and because his method of calculation was conservative by 0 to 25%.

The staff concludes that the frequency of spent fuel pool failure for a CEUS plant is acceptably low if the seismic capacity of its spent fuel pool structure is at least equal to 3 times the plant's SSE value, and the plant satisfies the seismic checklist proposed in NEI's December 13, 1999 letter (See Appendix 5). Although the risk has not been rigorously calculated for these sites, deterministic considerations lead the staff to conclude that peak ground accelerations in excess of 3 times SSE are not credible. For these sites the frequency of failure is bounded by $3x10^{-6}$ per year, and other considerations indicate the frequency may be significantly lower.

For those CEUS plants with spent fuel pool structures that do not pass the seismic checklist, a detailed evaluation of HCLPF would be necessary. Similarly, a detailed HCLPF would be necessary for all western plants since seismic capacity at the high levels of ground motion associated with the western plants are well above the generic HCLPF value of 1.2g peak spectral acceleration. For all CEUS plants which can demonstrate a HCLPF equal to 3 times their SSE, the risk is judged to be bounded by $3x10^{-6}$ per year. Similarly, for western sites

which can demonstrate a HCLPF equal to 2 times their SSE, the risk is judged to be bounded by $3x10^{-6}$ per year.

Gautam/Rich's version

Need [illegible]

handling system or a plant conforming to the NUREG-0612 guidelines, the plant is estimated to have a drop frequency mean value of 9.6×10^{-6} per year, again for 100 heavy load lifts per year but using data from U.S. Navy crane experience. Once the load is dropped, the analysis must then consider whether the drop would do significant damage to the spent fuel pool.

When estimating the failure frequency of the pool floor, the staff assumed that heavy loads physically travel near or over the pool approximately 13% of the total path lift length (the path lift length is the distance from the lift of the load to the placement of the load on the pool floor). The staff also assumed that the critical path length (the fraction of total path the load is lifted high enough above the pool that a drop could cause damage to the structure) is approximately 16% of the time the load is near or over the pool. The staff estimated the catastrophic failure rate from heavy load drops to have a mean value of 2.1×10^{-5} per year for a non-single failure proof system where reliance is placed on electrical interlocks, fuel handling system reliability, and safe load path procedures. The staff estimated the catastrophic failure rate from heavy load drops to have a mean value of 2×10^{-7} per year for a single failure proof system. The frequency of catastrophic drops would be less than 2×10^{-7} per year for a single failure proof or non-single failure proof system if the decommissioning plant performed a load drop analysis.

When estimating the failure frequency of the pool wall, the staff assumed one-in-ten heavy load drop events (0.1) will result in significant damage to the wall. For the non-single failure proof handling system, the mean value for the failure rate is 2.1×10^{-6} per year and for the single failure proof handling system the mean value for the failure rate is 2×10^{-8} per year. These failure frequencies would be significantly lower if a load drop analysis were performed and implemented. For comparison, the frequency given in NUREG/CR-4982 [Ref. 5] for wall failure was 3.7×10^{-8} per year, for 204 lifts per year. For 100 lifts, the NUREG/CR-4982 value would be 1.5×10^{-8} per year, which is comparable to the estimate in this assessment.

The combined (floor and wall) expected frequency for catastrophic failure of non-single failure proof systems is 2.3×10^{-5} per year, and for single failure proof systems is 2.2×10^{-7} per year. NEI has made a commitment (IDC #1) for the nuclear industry that future decommissioning plants will comply with phases 1 and 2 to the NUREG-0612 guidelines. Performance of a load drop analysis would further reduce these frequencies. The staff believes that this commitment would also provide a benefit to any current decommissioning plants that are still within the window of zirconium fire vulnerability.

3.4 Beyond Design Basis Spent Fuel Pool Accident Scenarios (External Events)

The following is a description of how we modeled each of the external event initiators, a discussion of the frequency of fuel uncovery associated with the initiator, and a description of the most important insights regarding risk reduction strategies for each initiator.

3.4.1 Seismic Events

When performing the evaluation of the effect of seismic events on spent fuel pools, it became apparent that the staff does not have detailed information on how all the spent fuel pools were

designed and constructed. Therefore, the staff originally performed a simplified bounding seismic risk analysis in our June 1999 draft risk assessment to help determine if there might be a seismic concern. The analysis indicated that seismic events could not be dismissed on the basis of a simplified bounding approach. After further evaluation and discussions with stakeholders, it was determined that it would not be cost effective to perform a plant-specific seismic evaluation for each spent fuel pool. Working with our stakeholders, the staff developed other tools that help assure the pools are sufficiently robust.

Spent fuel pool structures at nuclear power plants are seismically robust. They are constructed with thick reinforced concrete walls and slabs lined with stainless steel liners 1/8 to 1/4 inch thick[7]. Pool walls vary from 4.5 to 5 feet in thickness and the pool floor slabs are around 4 feet thick. The overall pool dimensions are typically about 50 feet long by 40 feet wide and 55 to 60 feet high. In boiling water reactor (BWR) plants, the pool structures are located in the reactor building at an elevation several stories above the ground. In pressurized water reactor (PWR) plants, the spent fuel pool structures are located outside the containment structure supported on the ground or partially embedded in the ground. The location and supporting arrangement of the pool structures determine their capacity to withstand seismic ground motion beyond their design basis. The dimensions of the pool structure are generally derived from radiation shielding considerations rather than structural needs. Spent fuel structures at operating nuclear power plants are able to withstand loads substantially beyond those for which they were designed. Consequently, they have significant seismic capacity.

During stakeholder interactions with the staff, the staff proposed the use of a seismic checklist, and in a letter dated August 18, 1999 (See Appendix 5), NEI proposed a checklist that could be used by any plant to show robustness for a seismic ground motion with a peak ground acceleration (PGA) of approximately 0.5g. This checklist was reviewed and enhanced by the staff. The staff has concluded that plants that satisfy the revised seismic checklist can demonstrate with reasonable assurance a high-confidence low-probability of failure (HCLPF)[8] at a ground motion that has a very small likelihood of exceedence.

U.S. nuclear power plants, including their spent fuel pools, were designed such that they can be safely shutdown and maintained in a safe shutdown condition if subjected to ground motion from an earthquake of a specified amplitude. This design basis ground motion is referred to as the safe shutdown earthquake (SSE). The SSE was determined on a plant specific basis consistent with the seismicity of the plant's location. In general, plants located in the eastern and central parts of the US, had lower amplitude SSE ground motions established for their designs than the plants located in the western parts of the US, which had significantly higher SSEs established for them because of the higher seismicity for locations west of the Rocky

---

[7] Except at Dresden Unit 1 and Indian Point Unit 1, these two plants do not have any liner plates. They were decommissioned more than 20 years ago and no safety significant degradation of the concrete pool structure has been reported.

[8] The HCLPF value is defined as the peak seismic acceleration at which there is 95% confidence that less than 5% of the structure, system, or component will fail.

Mountains. As part of this study, the staff with assistance from Dr. Kennedy (See Appendix 5), reviewed the potential for spent fuel pool failures to occur in various regions in the U.S. due to seismic events with ground motion amplitudes exceeding established SSE values. Based on this review, and a review of the conservative nature of the SSE ground motion at most of the sites, it was determined that for sites east of the Rocky Mountains, seismic ground motions 3 times as large as the SSE values are considered to be as high as physically possible, considering the current tectonics. For plants west of the Rocky Mountains, which have higher SSE design values than those in the Central and Eastern U.S. (CEUS), it was determined that the maximum credible earthquake ground motions would be approximately twice their SSE values. These estimates of the maximum credible earthquake ground motion levels, which are based on the tectonics that exist in the different parts of the U.S., show extremely low probabilities associated with ground motions of these higher levels. Therefore, for the purpose of this study, it was assumed that seismic ground motions 3 times the SSE design values, at lower seismicity locations (CEUS sites), and 2 times the SSE design values, at higher seismicity locations (West Coast sites), are good estimates of the maximum credible seismic ground motions for these sites.

The seismic component of risk can be limited if it can be demonstrated that there is a high confidence in a low probability of failure for seismic ground motion, greater than or equal to 2 times the SSE at higher seismicity sites and at 3 times the SSE at lower seismicity sites. Implicit in this is the assumption that pool structures are free from pre-existing degradation or other seismic vulnerabilities. The enhanced checklist seeks to assure there are no weaknesses in the design or construction of the pools that might make them vulnerable under earthquake ground motions several times higher than those of the site's. We note that spent fuel pool configuration, layout, and structural details vary considerably from one plant to another. Plants with spent fuel pools that fail the seismic check list would also fail the capacity goal appropriate for the area of the US that the pool is situated. The owner of these plants would need to conduct a detailed assessment of the seismically induced probability of failure of their spent fuel pool structures and components.

In his report dated October 1999 (Appendix 5), Dr. Kennedy estimated the spent fuel pool failure frequency for a plant with a HCLPF of 1.2g peak spectral acceleration, if sited at each of the 69 CEUS plant sites. For all but eight sites, the estimated failure frequency is less than 3 X 10^{-6} per year. Dr. Kennedy noted that this would be a conservative estimate for a plant meeting the checklist, because such plants would in fact exceed a HCLPF of 1.2g peak spectral acceleration, and because his method of calculation was conservative by 0 to 25%.

The staff concludes that the frequency of spent fuel pool failure for a CEUS plant is acceptably low if the seismic capacity of its spent fuel pool structure is at least equal to 3 times the plant's SSE value, and the plant satisfies the seismic checklist proposed in NEI's December 13, 1999 letter (See Appendix 5). Although the risk has not been rigorously calculated for these sites, deterministic considerations lead the staff to conclude that peak ground accelerations in excess of 3 times SSE are not credible. For these sites the frequency of failure is bounded by 3×10^{-6} per year, and other considerations indicate the frequency may be significantly lower.

For those CEUS plants with spent fuel pool structures that do not pass the seismic checklist, a detailed evaluation of HCLPF would be necessary. Similarly, a detailed HCLPF would be necessary for all western plants since seismic capacity at the high levels of ground motion associated with the western plants are well above the generic HCLPF value of 1.2g peak spectral acceleration. For all CEUS plants which can demonstrate a HCLPF equal to 3 times their SSE, the risk is judged to be bounded by $3x10^{-6}$ per year. Similarly, for western sites which can demonstrate a HCLPF equal to 2 times their SSE, the risk is judged to be bounded by $3x10^{-6}$ per year.

3.4.2 Aircraft

We evaluated the likelihood of an aircraft crashing into a nuclear power plant site and seriously damaging the spent fuel pool or its support systems (details are in Appendix 2d). Aircraft risk is generally quite low for operating plants, and while the same conclusion was expected for a decommissioning plant, this initiator was included in the staff's risk assessment for completeness.

The generic data provided in DOE-STD-3014-96 [Ref. 6], were used to assess the likelihood of an aircraft crash into or near a decommissioning spent fuel pool. Aircraft damage can affect the structural integrity of the spent fuel pool or affect the availability of nearby support systems, such as power supplies, heat exchangers, or water makeup sources, and may also affect recovery actions. There are two approaches that can be taken to evaluate the likelihood of an aircraft crash into a structure. The first is called the point target model which uses the area of the target to determine the likelihood that an aircraft will strike the target. The aircraft itself does not have real dimensions when using this model. In the second approach, the DOE model modifies the point target approach to account for the wing span and the skidding of the aircraft after it hits the ground by including the additional area the aircraft could cover. Further, that model takes into account the plane's glide path by introducing the height of the structure into the equation, which effectively increases the area of the target (see Appendix 2d).

Need revised

Our estimate of the frequency of catastrophic PWR spent fuel pool damage (i.e., the pool is so damaged that it rapidly drains and cannot be refilled from either onsite or offsite resources) resulting from a direct hit is based on one estimate using the point target area model for a 100 x 50 foot pool, with a conditional probability of 0.3 (large aircraft penetrating 6-ft of reinforced concrete) that the crash results in catastrophic damage. The point target model was chosen to model a direct hit on the pool. If 1-of-2 aircraft are large and 1-of-2 crashes result in significant damage, then the estimated range of catastrophic damage to the spent fuel pool is $9.6x10^{-12}$ to $4.3x10^{-8}$ per year. The mean value is estimated to be $2.9x10^{-9}$ per year. The frequency of catastrophic BWR spent fuel pool damage resulting from a direct hit by a large aircraft is the same as that for the PWR. Mark-I and Mark-II secondary containments generally do not appear to have any significant structures that might reduce the likelihood of aircraft penetration, although a crash into one of four sides of a BWR secondary containment may have a reduced likelihood of penetration due to other structures being in the way of the aircraft. Mark-III secondary containments may reduce the likelihood of penetration somewhat, as the spent fuel pool may be considered to be protected on one side by additional structures. If

Mark's version

the plant

drop frequency) was estimated, based on NUREG-0612 information, to have a mean value of 3.4×10^{-4} per year. The number of heavy load lifts was based on the NEI estimate of 100 spent fuel shipping cask lifts per year, which probably is an overestimate. A single failure proof load handling system or a plant conforming to the NUREG-0612 guidelines is estimated to have a drop frequency mean value of 9.6×10^{-6} per year, again for 100 heavy load lifts per year but using data from U.S. Navy crane experience. Once the load is dropped, the analysis must then consider whether the drop did significant damage to the spent fuel pool.

When estimating the failure frequency of the pool floor, the staff assumed that heavy loads physically travel near or over the pool approximately 13% of the total path lift length (the path lift length is the distance from the lift of the load to the placement of the load on the pool floor). The staff also assumed that the critical path length (the fraction of total path the load is lifted high enough above the pool that a drop could cause damage to the structure) is approximately 16% of the time the load is near or over the pool. The staff estimated the catastrophic failure rate from heavy load drops to have a mean value of 2.1×10^{-5} per year for a non-single failure proof system where reliance is placed on electrical interlocks, fuel handling system reliability, and safe load path procedures. The staff estimated the catastrophic failure rate from heavy load drops to have a mean value of 2.0×10^{-7} per year for a single failure proof system. The frequency of catastrophic drops would be less than 2×10^{-7} per year for a single failure proof or non-single failure proof system if the decommissioning plant performed a load drop analysis.

When estimating the failure frequency of the pool wall, the staff assumed one-in-ten heavy load drop events (0.1) will result in significant damage to the wall. For the non-single failure proof handling system, the mean value for the failure rate is 2.1×10^{-6} per year and for the single failure proof handling system the mean value for the failure rate is 2.0×10^{-8} per year. These failure frequencies would be significantly lower if a load drop analysis were performed and implemented. For comparison, the frequency given in NUREG/CR-4982 [Ref. 5] for wall failure was 3.7×10^{-8} per year, for 204 lifts per year. For 100 lifts, the NUREG/CR-4982 value would be 1.5×10^{-8} per year, very comparable to the estimate in this assessment.

The combined (floor and wall) expected frequency for catastrophic failure of non-single failure proof systems is 2.3×10^{-5} per year, and for single failure proof systems is 2.2×10^{-7} per year. NEI has made a commitment (IDC #1) for the nuclear industry that future decommissioning plants will comply with phases 1 and 2 to the NUREG-0612 guidelines. Performance of a load drop analysis would further reduce these frequencies. The staff believes that this commitment would also provide a benefit to any current decommissioning plants that are still within the window of zirconium fire vulnerability.

3.4 Beyond Design Basis Spent Fuel Pool Accident Scenarios (External Events)

The following is a description of how we modeled each of the external event initiators, a discussion of the frequency of fuel uncovery associated with the initiator, and a description of the most important insights regarding risk reduction strategies for each initiator.

3.4.1 Seismic Events

Need new seismic

When beginning our evaluation of the effect of seismic events on spent fuel pools, it became apparent that we did not have detailed information of how all the spent fuel pools were designed and constructed. We originally performed a simplified seismic risk analysis in our June 1999 draft risk assessment to help determine if there might be a seismic concern. The analysis indicated that seismic events could not be dismissed on the basis of a simplified approach. After further evaluation and discussions with stakeholders, we determined that it would not be cost effective to perform a plant-specific seismic evaluation for each spent fuel pool. Working with our stakeholders, we developed other tools that help assure the pools are sufficiently robust.

We believe spent fuel pool structures at nuclear power plants are seismically robust. They are constructed with thick reinforced concrete walls and floor slabs lined with thin stainless steel liners 1/8 to 1/4 inch thick.[7] Pool walls vary from 4.5 to 5 feet in thickness and the pool floor slabs are around 4 feet thick. The overall pool dimensions are typically about 50 feet long by 40 feet wide and 55 to 60 feet high. In boiling water reactor (BWR) plants, the pool structures are located in the reactor building at an elevation several stories above the ground. In pressurized water reactor (PWR) plants, the spent fuel pool structures are located outside the containment structure supported on the ground or partially embedded in the ground. The location and supporting arrangement of the pool structures determine their capacity to withstand loads beyond their design basis. Although the dimensions of the pool structure are generally derived from radiation shielding considerations rather than structural needs, spent fuel structures at ~~operating~~ nuclear power plants are able to withstand loads substantially beyond those for which they were designed. Consequently, they have significant seismic capacity.

Based on our work and that of an expert consultant (See Appendix 5), we estimated that seismic vulnerability of spent fuel pool structures for catastrophic failure is expected at levels of earthquake ground motion equal to 2.5 to 3.5 times a plant's safe shutdown earthquake (SSE). For sites east of the Rocky Mountains, ground motions three times the SSE are considered to be the upper bound that is physically possible for a site given the tectonics in the east. For the west coast sites, as the magnitude of the seismic event increases, the probability of its occurrence goes down rapidly. Thus a seismic event equal to 2.5 to 3.5 SSE at a west coast site may be so improbable as to be considered incredible for the site. In fact, the staff has concluded that, for west coast sites, a seismic event greater than two times the SSE should be considered as the upper bound of credibility. **SHOW RICH AND GOUTAM THESE CHANGES)**

Therefore, we assumed that seismic events greater than three times the SSE at a lower seismicity location (eastern US site) and two times the SSE at a higher seismicity location (west coast site) are nearly physically impossible. The seismic hazard component of the total SFP risk

---

[7] Except at Dresden Unit 1 and Indian Point Unit 1. These two plants do not have any liner plates. They were decommissioned more than 20 years ago and no safety significant degradation of the concrete pool structure has been reported.

thus can be set aside if it can be demonstrated that structural capacity, categorized as high confidence for low probability of failure (i.e., the HCLPF value) is greater than or equal to 2 times the SSE at higher seismicity Western sites and at 3 times the SSE at lower seismicity Eastern sites. Implicit in this is the assumption that pool structures are free from pre-existing degradation or other seismic vulnerabilities. To assure there are no vulnerabilities, NEI in concert with the staff developed a seismic checklist. The enhanced checklist seeks to assure there are no weaknesses in the design or construction of the pools that might make them vulnerable to earthquake ground motions several times higher than those in the site's safe shutdown earthquake (SSE). We note that spent fuel pool configuration, layout, and structural details vary considerably from one plant to another. For sites that fail the seismic check list or have a HCLPF value lower than the ground motion goal appropriate for the area of the U.S. the pool is situated in, the utility would need to conduct a detailed assessment of the seismically induced probability of failure of its spent fuel pool structures and components.

Our consultant's report (see Appendix 5) identifies 8 sites by site number for which seismically induced probability of failure (POF) is greater than $3X10^{-6}$ using the Lawrence Livermore National Laboratory 1993 hazard curves. For these sites it will be necessary to perform an evaluation of the POF using plant specific fragility information. For all other sites east of the Rocky Mountains, the use of the seismic check list should be adequate. The seismic checklist developed to meet this goal is also given in Appendix 5.

3.4.2 Aircraft

We evaluated the likelihood of an aircraft crashing into a nuclear power plant site and seriously damaging the spent fuel pool or its support systems (details are in Appendix 2D). Aircraft risk is generally quite low for operating plants, and while the same conclusion was expected for a decommissioning plant, this initiator was included in the staff's risk assessment for completeness.

The generic data provided in DOE-STD-3014-96 [Ref. 6], were used to assess the likelihood of an aircraft crash into or near a decommissioning spent fuel pool. Aircraft damage can affect the structural integrity of the spent fuel pool or affect the availability of nearby support systems, such as power supplies, heat exchangers, or water makeup sources, and may also affect recovery actions. There are two approaches that can be taken to evaluate the likelihood of an aircraft crash into a structure. The first is called the point target model which uses the area of the target to determine the likelihood that an aircraft will strike the target. The aircraft itself does not have real dimensions when using this model. In the second approach, the DOE model modifies the point target approach to account for the wing span and the skidding of the aircraft after it hits the ground by including the additional area the aircraft could cover. Further, that model takes into account the plane's glide path by introducing the height of the structure into the equation, which effectively increase the area of the target (see Appendix 2D).

Our estimate of the frequency of catastrophic PWR spent fuel pool damage (i.e., the pool is so damaged that it rapidly drains and cannot be refilled from either onsite or offsite resources) resulting from a direct hit is based on one estimate using the point target area model for a

The combined (floor and wall) expected frequency for catastrophic failure of non-single failure proof systems is 2.3×10^{-6} per year, and for single failure proof systems or a plant conforming to the NUREG-0612 guidelines is 2.2×10^{-7} per year. NEI has made a commitment (DIC #1) for the nuclear industry that future decommissioning plants will comply with phases 1 and 2 to the NUREG-0612 guidelines, which would put future decommissioning plants in the latter category.

3.4 Beyond Design Basis Spent Fuel Pool Accident Scenarios (External Events)

The following is a description of how we modeled each of the external event initiators, a discussion of the frequency of fuel uncovery associated with the initiator, and a description of the most important insights regarding risk reduction strategies for each initiator:

3.4.1 Seismic Events

When beginning our evaluation of the effect of seismic events on spent fuel pools, it became apparent that we do not have detailed information of how all the spent fuel pools were designed and constructed. We originally performed a simplified seismic risk analysis in our June 1999 draft risk assessment to help determine if there might be a seismic concern. The analysis indicated that seismic events could not be dismissed on the basis of a simplified approach. After further evaluation and discussions with stakeholders, we determined that it would not be cost effective to perform a plant-specific seismic evaluation for each spent fuel pool. Working with our stakeholders, we developed other tools that help assure the pools are sufficiently robust.

We believe spent fuel pool structures at nuclear power plants are seismically robust. They are constructed with thick reinforced concrete walls and slabs lined with thin stainless steel liners 1/8 to 1/4 inch thick.[6] Pool walls vary from 4.5 to 5 feet in thickness and the pool floor slabs are around 4 feet thick. The overall pool dimensions are typically about 50 feet long by 40 feet wide and 55 to 60 feet high. In boiling water reactor (BWR) plants, the pool structures are located in the reactor building at an elevation several stories above the ground. In pressurized water reactor (PWR) plants, the spent fuel pool structures are located outside the containment structure supported on the ground or partially embedded in the ground. The location and supporting arrangement of the pool structures determine their capacity to withstand loads beyond their design basis. The dimensions of the pool structure are generally derived from radiation shielding considerations rather than structural needs. Spent fuel structures at operating nuclear power plants are able to withstand loads substantially beyond those for which they were designed. Consequently, they have significant seismic capacity.

Based on our work and that of an expert consultant (See Appendix ~~7~~ 5b Kennedy report), we determined that seismic vulnerability of spent fuel pool structures is expected at levels of earthquake ground motion equal to 2.5 to 3.5 times a plant's safe shutdown earthquake (SSE).

---

[6] Except at Dresden Unit 1 and Indian Point Unit 1. These two plants do not have any liner plates. They were decommissioned more than 20 years ago and no safety significant degradation of the concrete pool structure has been reported.

For sites east of the Rocky Mountains, ground motions three times the SSE are considered to be as high as physically possible for a site given the tectonics in the east. For the west coast sites, as the magnitude of the seismic event increases, the probability of its occurrence goes down rapidly. Thus a seismic event equal to 2.5 to 3.5 SSE at a west coast site may be considered ~~in~~credible for the site. Therefore, for west coast sites a seismic event greater than two times the SSE could be considered too large to be credible.

Therefore, we assumed that seismic events greater than three times the SSE at a lower seismicity location (eastern US site) and two times the SSE at a higher seismicity location (west coast site) are nearly physically impossible. The seismic hazard component of the risk statement thus can be set aside if it can be demonstrated that structural capacity (i.e., the HCLPF value) is greater than or equal to 2 times the SSE at higher seismicity sites and at 3 times the SSE at lower seismicity sites. Implicit in this is the assumption that pool structures are free from pre-existing degradation or other seismic vulnerabilities. To assure there are no vulnerabilities, NEI developed a seismic checklist, which we enhanced. The enhanced checklist seeks to assure there are no weaknesses in the design or construction of the pools that might make them vulnerable to earthquake ground motions several times higher than those in the site's safe shutdown earthquake (SSE). We note that spent fuel pool configuration, layout, and structural details vary considerably from one plant to another. For sites that fail the seismic check list or have a HCLPF value lower than the ground motion goal appropriate for the area of the US the pool is situated in, the utility would need to conduct a detailed assessment of the seismically induced probability of failure of its spent fuel pool structures and components.

Our consultant's report (see Appendix 7) identifies 8 sites by site number for which seismically induced probability of failure (POF) is greater than $3X10^{-6}$ using the Lawrence Livermore National Laboratory 1993 hazard curves. For these sites it will be necessary to perform an evaluation of the POF using plant specific fragility information. For all other sites east of the Rocky Mountains, the use of the seismic check list should be adequate. The seismic checklist which the staff has developed to meet this goal is given in Appendix 5.

3.4.2 Aircraft

We evaluated the likelihood of an aircraft crashing into a nuclear power plant site and seriously damaging the spent fuel pool or its support systems (details are in Appendix 2). The generic data provided in DOE-STD-3014-96 [Ref. 6], were used to assess the likelihood of an aircraft crash into or near a decommissioning spent fuel pool. Aircraft damage can affect the structural integrity of the spent fuel pool or affect the availability of nearby support systems, such as power supplies, heat exchangers, or water makeup sources, and may also affect recovery actions. There are two approaches that can be taken to evaluate the likelihood of an aircraft crash into a structure. The first is called the point target model which uses the area (length times width) of the target to determine the likelihood that an aircraft will strike the target. The aircraft itself does not have real dimensions when using this model. In the second approach, the DOE model modifies the point target approach to account for the wing span and the skidding of the aircraft after it hits the ground by including the additional area the aircraft could cover. Further, that model takes into account the plane's glide path by introducing the height of the structure into the equation, which effectively increase the area of the target (see Appendix 2).

Our estimate of the frequency of catastrophic PWR spent fuel pool damage (i.e., the pool is so damaged that it rapidly drains and cannot be refilled from either onsite or offsite resources) resulting from a direct hit is based on one estimate using the point target area model for a 100 x 50 foot pool, with a conditional probability of 0.3 (large aircraft penetrating 6-ft of reinforced concrete) that the crash results in catastrophic damage. The point target model was chosen to model a direct hit on the pool. If 1-of-2 aircraft are large and 1-of-2 crashes result in significant damage, then the estimated range of catastrophic damage to the spent fuel pool is 9.6×10^{-12} to 4.3×10^{-8} per year. The mean value is estimated to be 2.9×10^{-9} per year. The frequency of catastrophic BWR spent fuel pool damage resulting from a direct hit by a large aircraft is the same as that for the PWR. Mark-I and Mark-II secondary containments generally do not appear to have any significant structures that might reduce the likelihood of aircraft penetration, although a crash into one of four sides of a BWR secondary containment may have a reduced likelihood of penetration due to other structures being in the way of the aircraft. Mark-III secondary containments may reduce the likelihood of penetration somewhat, as the spent fuel pool may be considered to be protected on one side by additional structures. If instead of a direct hit, the aircraft skidded into the pool or a wing clipped the pool, catastrophic damage may not occur. We project that skidding aircraft will be negligible contributors to the frequency of fuel uncovery resulting from catastrophic failure of the pool. The estimated frequencies of air craft induced catastrophic spent fuel pool failure are bounded by other initiators.

Our estimate of the frequency of significant damage to spent fuel pool support systems (e.g., power supply, heat exchanger, or makeup water supply) is developed for three different situations. The first case is based on the DOE model including the glide path and the wing and skid area for a 400 x 200 x 30 foot structure (i.e., the support systems are located inside a large building) with a conditional probability of 0.01 that one of these systems is hit. This model accounts for damage from the aircraft including, for example, being clipped by a wing. We assumed that critical systems occupy only 1% of the total structure area. The estimated frequency range for significant damage to the support systems is 1.0×10^{-10} to 1.0×10^{-6} per year. The mean value is estimated to be 7.0×10^{-8} per year. The second case estimates the value for the loss of a support system (power supply, heat exchanger or makeup water supply) based on the DOE model including the glide path and the wing and skid area for a 10 x 10 x 10 foot structure (i.e., the support systems are housed in a small building). The estimated frequency of support system damage ranges from 1.1×10^{-9} to 1.1×10^{-5} per year, with the mean estimated to be 7.3×10^{-7} per year. The third case uses the point model for this 10x10 structure, and the estimated value range is 2.4×10^{-12} to 1.1×10^{-8} per year, with the mean estimated to be 7.4×10^{-10} per year. Depending on the model approach (selection of the target structure size; use of the point target model or the DOE model), the mean value for an aircraft damaging a support system is in the 7×10^{-7} per year, or less, range. This is not the estimated frequency of fuel uncovery or a zirconium fire caused by damage to the support systems, since the frequency estimate does not include recovery, either onsite or offsite. As an initiator to failure of a support system leading to fuel uncovery and a zirconium fire, an aircraft crash is bounded by other more probable events. Recovery of the support system will reduce the likelihood of spent fuel uncovery.

Overall, the likelihood of significant spent fuel pool damage from aircraft crashes is bounded by other more likely catastrophic spent fuel pool failure and loss of cooling modes.

3.4.3 Tornadoes

We performed a risk evaluation of tornado threats to spent fuel pools (details are in Appendix 2E). We assumed that very severe tornadoes (F4 to F5 tornadoes on the Fujita scale) would be required to cause catastrophic damage to a PWR or BWR spent fuel pool. We then looked at the frequency of such tornadoes occurring and the conditional probability that if such a tornado hit the site, it would seriously damage the spent fuel pool or its support systems. To do this we examined the frequency and intensity of tornadoes in each of the continental United States using the methods described in NUREG/CR-2944 [Ref. 7]. The frequency of having an F4 to F5 tornado is estimated to be 5.6×10^{-7} per year for the central U.S., with a U.S. average value of 2.2×10^{-7} per year.

We then considered what level of damage an F4 or F5 tornado could do to a spent fuel pool or its support systems. Based on the buildings housing the spent fuel pools and the thickness of the spent fuel pools themselves, the conditional probability of catastrophic failure given a tornado missile is very low. Hence, the overall frequency of catastrophic pool failure caused by a tornado is extremely low (i.e., the calculated frequency of such an event is less than 1×10^{-9} per year)

We assumed that an F2 to F5 tornado would be required if significant damage were to occur to spent fuel pool support systems (e.g., power supply, cooling pumps, heat exchanger, or makeup water supply). The frequency of having an F2 to F5 tornado is estimated to be 1.5×10^{-5} per year for the central U.S., with a U.S. average value of 6.1×10^{-6} per year. As an initiator to failure of a support system, the tornado is bounded by other more probable events.

3.4.4 Criticality in Spent Fuel Pool

Due to the processes involved and lack of data, it was not possible to perform a quantitative risk assessment for criticality in the spent fuel pool. In Appendix 3 the staff performed an evaluation of the potential scenarios that could lead to criticality and identified those that are credible.

In this section the staff provides its qualitative assessment of risk due to criticality in the SFP, and its conclusions that with the additional requirements identified, the potential risk from SFP criticality is sufficiently small.

The assessment referenced in Appendix 3 identified two scenarios as creditable, which are listed below.

(1) A compression or buckling of the stored assemblies could result in a more optimum geometry (closer spacing) and thus create the potential for criticality (see the NRC staff report "Assessment of the Potential for Criticality in Decommissioned Spent Fuel Pools," in Appendix 3). Compression is not a problem for high-density PWR or BWR racks because they have sufficient fixed neutron absorber plates to mitigate any reactivity

increase, nor is it a problem for low-density PWR racks if soluble boron is credited. But compression of a low-density BWR rack could lead to a criticality since BWR racks contain no soluble or solid neutron absorbing material. High-density racks are those that rely on both fixed neutron absorbers and geometry to control reactivity. Low-density racks rely solely upon geometry for reactivity control. In addition, all PWR pools are borated, whereas BWR pools contain no soluble absorbing material. If both PWR and BWR pools were borated, criticality would not be achievable for a compression event.

(2) If the stored assemblies are separated by neutron absorber plates (e.g., Boral or Boraflex), loss of these plates could result in a potential for criticality for BWR pools. For PWR pools, the soluble boron would be sufficient to maintain sub-criticality. The absorber plates are generally enclosed by cover plates (stainless steel or aluminum alloy). The tolerances within a cover plate tend to prevent any appreciable fragmentation and movement of the enclosed absorber material. The total loss of the welded cover plate is not considered feasible.

Boraflex has been found to degrade in spent fuel pools due to gamma radiation and exposure to the wet pool environment. For this reason, the NRC issued Generic Letter 96-04 to all holders of operating licenses, on Boraflex degradation in spent fuel storage racks. Each addressee that uses Boraflex was requested to assess the capability of the Boraflex to maintain a 5% sub-criticality margin and to submit to the NRC proposed actions to monitor the margin or confirm that this 5% margin can be maintained for the lifetime of the storage racks. Many licensees subsequently replaced the Boraflex racks in their pools or reanalyzed the criticality aspects of their pools, assuming no reactivity credit for Boraflex.

Other potential criticality events, such as loose debris of pellets or the impact of water or firefighting foam (adding neutron moderation) during personnel actions in response to accidents were discounted due to the basic physics and neutronic properties of the racks and fuel, which would preclude criticality conditions being reached with any creditable likelihood. For example, without moderation, fuel at current enrichment limits (no greater than 5 wt% U-235) cannot achieve criticality, no matter what the configuration. If it is assumed that the pool water is lost, a re-flooding of the storage racks with unborated water or fire-fighting foam may occur due to personnel actions. However, both PWR and BWR storage racks are designed to remain subcritical if moderated by unborated water in the normal configuration. The phenomenon of a peak in reactivity due to low-density (optimum) moderation (fire-fighting foam) is not of concern in spent fuel pools since the presence of relatively weak absorber materials such as stainless steel plates or angle brackets is sufficient to preclude neutronic coupling between assemblies. Therefore, personnel actions to refill a drained spent fuel pool containing undeformed fuel assemblies would not create the potential for a criticality. Thus, the only potential scenarios described above in 1 and 2 involve crushing of fuel assemblies in low density racks or degradation of Boraflex over long periods in time.

To gain qualitative insights on the recriticality events that are credible, the staff considered the sequences of events that must occur. For scenario 1 above this would be require a heavy load drop into the a low density racked BWR pool compressing assemblies. From the work done on heavy load drop, the likelihood of a heavy load drop from a single failure proof crane has been

(22) # 918

determined to have a mean frequency of approximately 9.6E-6 per year, assuming 100 cask movements per year at the decommissioning facility. From the load path analysis done for that appendix it was estimated that the load could be over or near the pool approximately 13% of the movement path length, dependant on plant specific layout specifics. The additional frequency reduction in the appendix to account for the fraction of time that the heavy load is lifted high enough to damage the pool liner is not applicable here because the fuel assemblies could be crushed without the same impact velocity being required as for the pool liner. Therefore, we observe a potential initiating frequency for crushing of approximately 1.2E-6 per year (based upon 100 lifts per year). Criticality calculations conducted for Appendix 3 show that even if the low density BWR assemblies were crushed by a transfer cask, it is "highly unlikely" that a configuration would be reached that would result in a severe reactivity event, such as a steam explosion which could damage and drain the spent fuel pool. The staff judges the chances of such a criticality event to be well below 1 chance in 100 even given that the transfer cask drops directly onto the assemblies. This would put the significant criticality likelihood well below 1E-8 per year, which justifies its exclusion from further consideration.

Deformation of the low density BWR racks by the dropped transfer cask was shown to most likely not result in any criticality events. However, if some mode of criticality was to be induced by the dropped transfer cask it would more likely be a small return to power for a very localized region, rather than the severe response discussed the above paragraph. This minor type of event would have essentially no offsite (or onsite) consequences since the reactions heat would be removed by localized boiling in the pool and water would provide shielding to the site operating staff. The reaction could be terminated with relative ease by the addition of boron to the pool. Therefore, the staff believes that qualitative (as well as some quantitative) assessment of scenario 1 demonstrates that it poses no significant risk to the public from SFP operation during the period that the fuel remains stored in the pool.

With respect to scenario #2 from above, (the gradual degradation of the Boraflex absorber material in high density storage racks), there is currently not sufficient data to quantify the likelihood of criticality occurring due to its loss. However, the current programs in place at operating plants to assess the condition of the Boraflex, and take remedial action if necessary provide sufficient confidence that pool reactivity requirements will be satisfied . In order to meet the RG 1.174 safety principle of maintaining sufficient safety margins, the staff judges that continuation of such programs into the decommissioning phase would be required at all plants until all high density racks are removed from the SFP.

see words on safety margin

Additionally, to provide an element of ~~defense in depth~~, the staff believes that inventories of boric acid be maintained on site, to respond to scenarios where loss of pool inventories have to be responded to by makeup of unborated water at PWR sites. The staff will also require that procedures be available to provide guidance to the operating staff as to when such boron addition may be beneficial.

Based upon the above conclusions and staff requirements, we believe that qualitative risk insights demonstrate conclusively that SFP criticality poses so meaningful risk to the public.

4.0 Implications of Spent Fuel Pool Risk For Regulatory Requirements

An important motivation for performing the risk analysis contained in this report is to provide insight into the regulatory requirements that would be needed to control the risk at decommissioning plants. In order to do that, Chapter 4.1 presents a brief summary of the risk results that are most pertinent to that end.

The analysis in Chapter 3 explicitly examines the risk impact of specific design and operational characteristics. Some of these have been proposed by the Nuclear Energy Institute in a letter to the NRC dated November 12, 1999 [See Ref. 1 or Appendix 6]. Others came to light as a result of the analysis itself. These characteristics are summarized in Chapter 4.1. The NRC intends to make these the principle aspects of the risk-informed approach to oversight of decommissioning plants.

Chapter 4.2 examines the design and operational elements that are important in ensuring that the risk from a SFP is sufficiently low and how these elements support the safety principles of RG 1.174 as they apply to a SFP.

In addition, the industry and other stakeholders have proposed the use of risk-informed decision-making to assess regulatory requirements in three specific areas; namely, emergency preparedness, security and insurance. The technical results of this report might be used either to justify plant-specific exemptions from these requirements, or to determine how these areas will be treated in a risk-informed oversight process. Chapter 4.3 examines the implications of this technical results for those specific regulatory decisions.

4.1. Summary of the Technical Results

The thermal-hydraulic analysis presented in Appendix 1 demonstrates that the conditions necessary for a zirconium fire exist in spent fuel pools of decommissioning plants for a period of several years following shutdown. The analysis shows that the length of time over which the fuel is vulnerable depends on several factors, including fuel burn up and pool configuration. In some cases analyzed in Appendix 1 the required decay time is 5 years. However, the time period for any specific plant will vary. Plant-specific analysis is needed to justify the use of shorter decay periods.

The consequence analysis presented in Appendix 4 demonstrates that the consequences of a zirconium fire in a decommissioning plant are very large. The integrated dose to the public is generally comparable to a large early release. Early fatalities, however, are low compared to those from a large early release from an operating reactor accident, and are very sensitive to the effectiveness of evacuation.

For a decommissioning plant with about one year of decay time, the timing of radiological releases from zirconium fires is significantly slower than those from the most limiting reactor accident scenarios. This is due to the slow heat up time of the fuel. In addition, for many of the sequences leading to zirconium fires, there are very large delay times due to the long time required to boil off the spent fuel pool water inventory. Thus, while the consequences of zirconium fires are in some ways comparable to large early releases from reactor accidents, the timing is much slower.

The annual frequency of events leading to zirconium fires at decommissioning plants is estimated to be less than $3x10^{-6}$ per year for a plant that implements the design and operational characteristics discussed below. This estimate can be much higher for a plant that does not embody these characteristics. The most significant contributor to this risk is a seismic event which exceeds the design basis earthquake. . This overall frequency is within the recommended pool performance guideline (PPG) for large radionuclide releases due to zirconium fire of $1x10^{-5}$ per year. As noted above, zirconium fires are estimated to be similar to large early releases (LERF) in some ways, but less severe in others.

4.2 Risk Impact of Specific Design and Operational Characteristics

This section will discuss the design and operational elements that are important in ensuring that the risk from a SFP is sufficiently low. Relationship of the elements to the quantitative risk findings will be discussed as well as how the elements support additional safety principles of RG 1.174 as they apply to a SFP.

4.2.1. When proposed changes result in an increase in core damage frequency and/or risk, the increases should be small and consistent with the intent of the Commission's Safety Goal Policy Statement.

The staff's risk assessment as discussed in Chapter 3 shows that the baseline risk from a decommissioning spent fuel pool is a frequency for a zirconium fire of less than $3x10^{-6}$ per year. As was discussed in Chapter 2, the staff has determined that such a fire results in a large radionuclide release and poses a highly undesirable end state for a spent fuel pool accident. Therefore the staff has judged that a pool performance guideline (PPG) of $1x10^{-5}$ per year derived from the RG 1.174 application of LERF, should be applied. The risk assessment shows that the SFP baseline risk is well under the recommended PPG.. In assessing secondary guideline (the changes in risk from changes in regulatory requirements), the staff considered a potential relief from EP requirements as the modification.

Staff consequence analysis in Appendix 4 shows that the early health impacts from zirconium fire scenarios are significantly impacted by evacuation. This evacuation will greatly reduce the early fatalities near the plant site. However, this analysis also showed that for the slowly evolving SFP accident sequences, the initiation of effective evacuation can be much delayed in comparison to an operating reactor, where the accident results in high offsite does much more rapidly. Based upon this insight, the staff will require decommissioning staff requirement (DSR) #2, that a basic evacuation scheme be maintained at the plant. This scheme will include guidance on when offsite evacuation should be initiated, and ensure that current liaisons with offsite emergency organizations be maintained so that an ad hoc evacuation (as is done for transportation emergencies) can be put into place when needed. Since the slower evacuation expected from such an ad hoc effort was still shown to be effective for the SFP fire scenarios, this change from a formal offsite EP program is not expected to have any meaningful risk impact.

In addition to DSR #2, the low numerical risk results shown in Chapter 3 and Appendix 2 are derived from a number of design and operational elements of the SFP. As shown in those sections, the dominant risk contribution is from seismic events well beyond the plants original

design basis. The baseline seismically initiated zirconium fire frequency from our risk assessment is predicated upon implementation of the seismic checklist shown in Appendix 5. The staff will require that such a checklist (DSR #3) be successfully implemented at all decommissioning facilities prior to relief from any regulatory requirements.

The accident sequences in Chapter 3 associated with loss of cooling or loss of inventory are quantified to result in low risk due to a number of elements that enhance the ability of the operators to respond successfully to the events with onsite and offsite resources. Without these elements, the probability of the operators detecting and responding to the loss of cooling or inventory would be higher and public risk from these categories of SFP accidents could significantly increased. Some elements were also identified that reduce the likelihood of the loss of cooling or loss of inventory initiators, including both design as well as operational issues. The elements proposed by industry (Decommissioning Industry Commitments (DICs)) are identified below.

To reduce the likelihood of loss of inventory the following was committed to by industry:

DIC #6 Spent fuel pool seals that could cause leakage leading to fuel uncovery in the event of seal failure shall be self limiting to leakage or otherwise engineered so that drainage cannot occur.

DIC #7 Procedures or administrative control to reduce the likelihood of rapid drain down events will include (1) prohibitions on the use of pumps that lack adequate siphon protection or (2) control for pump; suction and discharge points. The functionality of anti-siphon devices will be periodically verified.

DIC #9 Procedures will be in place to control spent fuel pool operations that have the potential to rapidly decrease spent fuel pool inventory. These administrative controls may require additional operations or management review, management physical presence for designated operations or administrative limitations such as restrictions on heavy load movements.

The high probability of the operators identifying and diagnosing a loss of cooling or inventory is dependent upon;

DIC #2 Procedures and training of personnel will be in place to ensure that on site and off site resources can be brought to bear during an event.

DIC #3 Procedures will be in place to establish communication between on site and off site organizations during severe weather and seismic events.

DIC #4 An off site resource plan will be developed which will include access to portable pumps and emergency power to supplement on site resources. The plan would principally identify organizations or suppliers where off site resources could be obtained in a timely manner.

DIC #5 Spent fuel pool instrumentation will include readouts and alarms in the control room (or where personnel are stationed) for spent fuel pool temperature, water level, and area radiation levels.

DIC #8 An on site restoration plan will be in place to provide repair of the spent fuel pool cooling systems or to provide access for makeup water to the spent fuel pool. The plan will provide for remote alignment of the makeup source to the spent fuel pool without requiring entry to the refuel floor.

The staff's risk evaluation also shows that the potential for pool failure due to heavy load drop to be significant if appropriate design and procedural control are not in place. The staff judges that such controls are provided by the decommissioning industry commitments (DICs).

DIC #1 Cask drop analyses will be performed or single failure proof cranes will be in use for handling of heavy loads (i.e. phase II of NUREG-0612) will be implemented).

4.2.2. The Proposed Change Is Consistent with the Defense-in-depth Philosophy.

The staff's risk assessment demonstrates that the risk from a decommissioning plant SFP accident is very small, if industry commitments are implemented as assumed in the risk study. Due to the very different nature of a SFP accident versus the threat from an operating reactor, with respect to system design capability needs and event timing, the defense in depth function of reactor containment is not appropriate. However the staff has identified that the defense in depth of some form of emergency planning can be useful as a means of achieving consequence mitigation. The degree to which it may be required as an additional barrier is a function of the uncertainty associated with the prediction of the frequency of the more catastrophic events, such as beyond design basis earthquakes. There can be a trade off between the formality with which the elements of emergency planning (procedures, training, performance of exercises) are treated and the increasing safety margin as the fuel ages and the time for response gets longer. Therefore the staff has identified the following decommissioning requirement above, which is stated:

DSR #4 Each decommissioning plant will develop and maintain a site emergency plan, that contains guidance on when a site emergency should be declared with respect to the possibility of a SFP fire. The plan will also identify off site liaisons with public emergency organizations to put in place ad hoc evacuation so as to have an effective evacuation prior to the postulated zirconium fire. The elements of this plan will be submitted to the staff for approval prior to any relief for full EP being considered.

4.2.3 The Proposed Change Maintains Sufficient Safety Margins

As discussed in Chapter 2 the safety margins associated with fuel in the spent fuel pool are much greater than those associated with an operating reactor due to the low heat removal requirements and long time frames available for recovery from off normal events. Due to these larger margins the staff judges that the skid mounted and other dedicated SFP cooling and inventory systems in place do provide adequate margins. However, the staff assessment did

identify one area where additional margins are of benefit in moderating the risk from potential pool re-criticality. Due to the potential for loss of inventory events that can be recovered by use of alternate water sources, the potential exists for loss of shutdown margins with the addition of unbraced water to pools that originally are borated. Additionally for pools that utilize Boraflex absorbers in high density racks, having boron on site for addition to the pool, would allow for quick restoration of shutdown margin if the rack surveillance and monitoring program did identify any significant degradation of the Boraflex. This leads to the following decommissioning staff requirement:

DSR #5 All decommissioning plants will retain on site quantities of soluble boron sufficient for maintaining pool shutdown margins in a borated pool which is assumed to have 50% of its water mass replace with unbraced water. Additionally all decommissioning plants that utilize Boraflex absorbers will maintain sufficient soluble boron on site to make up shutdown reactivity margin lost due to degradation of 20% of Boraflex in the high density racks. Procedures will also be developed on the use of this boron for either scenario.

4.2.4. The Impact of the Proposed Change Should Be Monitored Using Performance Measurement Strategies.

RG 1.174 states that an implementation and monitoring plan should be developed to ensure that the engineering evaluation conducted to examine the impact of the proposed changes continues to reflect the actual reliability and availability of SSCs that have been evaluated. This will ensure that the conclusions that have been drawn will remain valid. For the SFP risk evaluation this identifies three primary areas for performance monitoring: 1) The performance and reliability of SFP cooling and associated power and inventory makeup systems, 2) Monitoring of the Boraflex condition for high density fuel racks, and 3) Monitoring crane operation and load path control for cask movements.

Monitoring of the performance and reliability of the SFP support systems, heat removal, power and inventory should be carried out under the provisions of the maintenance rule 50.65. Decommissioning plant licensees will retain the commitment to maintain a list of equipment within the scope of the maintenance rule as well as applicable performance criteria they are assessed against. Since the staff will not entertain requests for exemptions from this Rule for decommissioning plants, no additional DSR is required in this area.

With respect to monitoring of the Boraflex absorber material, the current monitoring programs required by Generic Letter 96-04 [Ref. 3] will be maintained by decommissioning plants until all fuel is removed from the SFP. This generates a decommissioning staff requirement (DSR).

DSR #6 Licensees will maintain a program to provide surveillance and monitoring of Boraflex in high density spent fuel racks until such a time as do high density racks are retained in the pool. The SFP licensees will also have procedures in place to assess degradation impact on reactivity shutdown margin and provide additional pool boration as necessary to maintain the needed margins.

With respect to monitoring and control of heavy load activities and load path control, licensee guidance in this area will be provided by DIC # 1.

4.3. Implications for Regulatory Requirements Related to Emergency Preparedness, Security and Insurance

The industry and other stakeholders have expressed interest in knowing the relevance of the results of this study to decisions regarding specific regulatory requirements. These decisions could be made in response to plant-specific exemption requests, or as part of the integrated rulemaking for decommissioning plants. Such decisions can be facilitated by a risk-informed examination of the both the deterministic and probabilistic aspects of decommissioning. Three examples of such regulatory decisions are presented in this section.

4.3.1 Emergency Preparedness

The requirements for emergency preparedness for are contained in 10CFR 50.47 [Ref. 4] and Appendix E [Ref. 5]. Further guidance on the basis for EP requirements is contained in NUREG-0396 [Ref. 6]. The general goal of EP requirements is to prevent early fatalities and to reduce offsite dose from accidents.

In the past, the NRC staff has granted exemptions from emergency planning requirements for decommissioning plants that could demonstrate that they were beyond the period in which a zirconium fire could occur. The rationale for those decisions was that, in the absence of a zirconium fire, a decommissioning plant had no appreciable scenarios for which the consequences justify the imposition of an EP requirement. The results of this technical study confirm that position for both the scenarios resulting in a potential zirconium fire as well as creditable pool criticality events.

In some cases, emergency preparedness exemptions have also been granted to plants which were still in the window of vulnerability for zirconium fire. In these cases, the justification was that enough time had elapsed since shutdown that the evolution of a zirconium fire accident would be slow enough to allow effective offsite protective actions on an ad hoc basis, without the need for emergency planning. The staff believes that the technical analysis discussed in Chapter 3 and the decision criteria laid out in Chapter 2 have direct bearing on how such exemption requests should be viewed in the future. In addition, this information has bearing on the need for, and the extent of, emergency preparedness requirements in the integrated rulemaking.

The consequence analysis presented in Appendix 4 demonstrates that the offsite consequences of a zirconium fire are comparable to those from operating reactor severe accidents. Further, the analysis demonstrates that timely evacuation can significantly reduce the number of early fatalities due to a zirconium fire. The thermal-hydraulic analysis presented in appendix 1 confirms our earlier conclusion that zirconium fire events evolve slowly, even for initiating events that result in a catastrophic loss of fuel pool coolant. The results in Chapter 3 also show that the frequency of zirconium fires is low when compared with the risk guidelines from RG 1.174. Thus the risk associated with early fatalities from these scenarios is low. Based on this combination of low risk and slow evolution, the Commission might decide to

reduce or eliminate EP requirements for decommissioning plants. With respect to the potential for pool criticality, the staff's assessment discussed in Chapter 3 and Appendix 3 demonstrates that creditable scenarios for criticality are precluded by monitoring programs or are highly unlikely; and even if they do occur would not be expected to have offsite consequences. Therefore the conclusions regarding possible reductions in EP program requirements are not impacted.

One important safety principle of RG 1.174 is consistency with the defense in depth philosophy. In the rationalist approach, defense in depth is included in a plant design to account for uncertainties in the analysis or operational data. The spent fuel pools at operating reactors and decommissioning facilities do not exhibit the defense in depth accorded to the reactor. As discussed in Chapter 1, this difference is justified in light of the considerably greater margin of safety of the SFP compared with reactors. For SFP at operating reactors, defense in depth consists mainly of the mitigating effect of emergency preparedness. The Commission might consider retaining a baseline level of EP requirements for decommissioning plants as a defense in depth measure. This might be justified in view of the uncertainties associated with the risk analysis presented herein. The staff has not attempted to assess what level of emergency preparedness might be needed to provide this defense in depth. However, given the slow nature of these accidents, we believe it would be substantially lower than what is currently required for operating reactors.

The risk assessments contained in this report indicate that it would be acceptable to reduce the level of emergency preparedness to a minimum baseline level at a decommissioning reactor after a period of 1 year has elapsed. For purposes of this study, a 1 year period was considered the minimum decay time necessary to reduce the pool heat load to a level that would provide sufficient human response time for anticipated transients, and minimize any potential gap release. Any licensee wishing to gain relief from the EP requirements prior to the one year post-shutdown period given credit for in this report, would need to demonstrate a more robust reaction time than that credited in the human reliability analysis employed in this study. The staff would be receptive to an industry initiative or plant specific application that would attempt to advance the state of the art in this area.

4.3.2 Security

Currently licensees that have permanently shutdown reactor operations and have offloaded the spent fuel into the SFP are still required to meet all the security requirements for operating reactors in 10 CFR 73.55 [Ref 7]. This level of security would require a site with a permanently shutdown reactor to provide security protection at the same level as that for an operating reactor site. The industry has asked the NRC to consider whether the likelihood of radiological release from decommissioning plants due to sabotage is low enough to justify modification of safeguards requirements for SFPs at decommissioning plants.

In the past, decommissioning licensees have requested exemptions from specific regulations in 10 CFR 73.55, justifying their requests on the basis of a reduction in the number of target sets susceptible to sabotage attacks, and the consequent reduced hazard to public health and safety. Limited exemptions based on these assertions have been granted. The risk analysis in this report does not take exception to the reduced target set argument; however, the analysis

1/21/00 11:50 AM

reduce or eliminate EP requirements for decommissioning plants. With respect to the potential for pool criticality, the staff's assessment discussed in Chapter 3 and Appendix 3 demonstrates that creditable scenarios for criticality are precluded by monitoring programs or are highly unlikely; and even if they do occur would not be expected to have offsite consequences. Therefore the conclusions regarding possible reductions in EP program requirements are not impacted.

One important safety principle of RG 1.174 is consistency with the defense in depth philosophy. In the rationalist approach, defense in depth is included in a plant design to account for uncertainties in the analysis or operational data. The spent fuel pools at operating reactors and decommissioning facilities do not exhibit the defense in depth accorded to the reactor. As discussed in Chapter 1, this difference is justified in light of the considerably greater margin of safety of the SFP compared with reactors. For SFP at operating reactors, defense in depth consists mainly of the mitigating effect of emergency preparedness. The Commission might consider retaining a baseline level of EP requirements for decommissioning plants as a defense in depth measure. This might be justified in view of the uncertainties associated with the risk analysis presented herein. The staff has not attempted to assess what level of emergency preparedness might be needed to provide this defense in depth. However, given the slow nature of these accidents, we believe it would be substantially lower than what is currently required for operating reactors.

The risk assessments contained in this report indicate that it would be acceptable to reduce the level of emergency preparedness to a minimum baseline level at a decommissioning reactor after a period of 1 year has elapsed. For purposes of this study, a 1 year period was considered the minimum decay time necessary to reduce the pool heat load to a level that would provide sufficient human response time for anticipated transients, and minimize any potential gap release. Any licensee wishing to gain relief from the EP requirements prior to the one year post-shutdown period given credit for in this report, would need to demonstrate a more robust reaction time than that credited in the human reliability analysis employed in this study. The staff would be receptive to an industry initiative or plant specific application that would attempt to advance the state of the art in this area.

4.3.2 Security

Currently licensees that have permanently shutdown reactor operations and have offloaded the spent fuel into the SFP are still required to meet all the security requirements for operating reactors in 10 CFR 73.55 [Ref 7]. This level of security would require a site with a permanently shutdown reactor to provide security protection at the same level as that for an operating reactor site. The industry has asked the NRC to consider whether the risk of radiological release from decommissioning plants due to sabotage is low enough to justify modification of safeguards requirements for SFPs at decommissioning plants.

In the past, decommissioning licensees have requested exemptions from specific regulations in 10 CFR 73.55, justifying their requests on the basis of a reduction in the number of target sets susceptible to sabotage attacks, and the consequent reduced hazard to public health and safety. Limited exemptions based on these assertions have been granted. The risk analysis in this report does not take exception to the reduced target set argument; however, the analysis

does not support the assertion of a lesser hazard to public health and safety, given the consequences that can occur from a sabotage induced uncovery of fuel in the SFP when a zirconium fire potential exists. Further, it cannot evaluate the potential consequences of a sabotage event that could directly cause off site fission product dispersion, for example from a vehicle bomb that was driven into the SFP even if a zirconium fire was no longer possible. However, this report would support a regulatory framework that relieves licensees from selected requirements in 10 CFR 73.55 on the basis of target set reduction when all fuel has been placed in the SFP.

The risk estimates contained in this report are based on accidents initiated by random equipment failures, human errors or external events. PRA practitioners have developed and used dependable methods for estimating the frequency of such random events. By contrast, this analysis, and PRA analyses in general, do not include events due to sabotage. No established method exists for estimating the likelihood of a sabotage event. Nor is there a method for analyzing the effect of security provisions on that likelihood. Security regulations are based on a zero tolerance for sabotage, involving special nuclear material - which includes spent fuel; the regulations are designed and structured to remove sabotage from design basis threats at a commercial nuclear power plant, regardless of the probability or consequences.

The technical information contained in this report shows that the consequences of a zirconium fire would be high enough to justify provisions to prevent sabotage. Moreover, the risk analysis could be used effectively to assist in determining priorities for, and details of, the security capability at a plant. However, there is no information in the analysis that bears on the level of security necessary to limit the risk from sabotage events. Those decisions will continue to be made based on a deterministic assessment of the level of threat and the difficulty of protecting the facility.

In an associated regulatory arena, 10 CFR [Ref. 8] allows facilities not associated with an operating power reactor to store spent fuel at an independent spent fuel storage installation (ISFSI). This rule provides performance-based regulations specifically designed for these types of storage installations, i.e., fuel in dry cask containers or other storage formats.

Ex 5

The proposed rulemaking would provide regulations specifically applicable to power reactor sites that have permanently ceased operations. The new rulemaking would codify and

consolidate current regulations at a level commensurate with the reduced risk potential of sabotage at permanently shutdown sites. To develop this rulemaking, we will review existing regulations in 10 CFR 73.55 and determine what requirements are necessary for a permanently shutdown power reactor. After analyzing the security areas that need to be protected, we will eliminate requirements that are beyond the protection strategy needed for a permanently shutdown power reactor site and its capability to preclude a radiological release that could impact public health and safety.

Ex 5

The staff also noted that the applicability of 10 CFR 26 [Ref 9] has not been established for decommissioning reactors once the fuel has been removed from the reactor vessel and placed in the SFP, and specifically does not apply to ISFSIs licensed under 10 CFR 72. Given the importance of a vehicle bomb threat to the integrity of SFP, and the significance of HRA to the conclusions reached in the SFP risk analysis, the staff recommends that for coherency in the regulations, both of these subjects be revisited during the overall integration of rules for decommissioning reactors.

4.3.3 Insurance

In accordance with 10 CFR 140 [Ref. 10], each 10 CFR 50 licensee is required to maintain public liability coverage in the form of primary and secondary financial protection. This coverage is required to be in place from the time unirradiated fuel is brought onto the facility site until all the radioactive material has been removed from the site, unless the Commission terminates the Part 50 license or otherwise modifies the financial protection requirements. The industry has asked the NRC to consider whether the likelihood of large scale radiological releases from decommissioning plants is low enough to justify modification of the financial protection requirements once the plant is permanently shutdown and prior to complete removal of all radioactive material from the site.

In the past, licensees have been granted exemptions from financial protection requirements on the basis of deterministic analyses showing that a zirconium fire could no longer occur. The analysis in this report supports continuation of this practice in the interim, and would support a revised regulatory framework for decommissioning plants that eliminates the need for insurance protection when a plant-specific thermal-hydraulic analysis demonstrates that a zirconium fire can no longer occur.

The NRC staff has considered whether the risk analysis in this report justifies relief from this requirement for decommissioning plants during the period when they are vulnerable to zirconium fires. As part of this effort, the staff determined that an analogy can be drawn between a SFP at a decommissioning plant and a wet (as opposed to dry) Independent Spent Fuel Storage Installation (ISFSI) licensed under 10 CFR 72 for which no indemnification

does not support the assertion of a lesser hazard to public health and safety, given the consequences that can occur from a sabotage induced uncovery of fuel in the SFP when a zirconium fire potential exists. Further, it cannot evaluate the potential consequences of a sabotage event that could directly cause off site fission product dispersion, say from a vehicle bomb that was driven into the SFP even if a zirconium fire was no longer possible. However, this report would support a regulatory framework that relieves licensees from selected requirements in 10 CFR 73.55 on the basis of target set reduction when all fuel has been placed in the SFP.

The risk estimates contained in this report are based on accidents initiated by random equipment failures, human errors or external events. PRA practitioners have developed and used dependable methods for estimating the frequency of such random events. By contrast, this analysis, and PRA analyses in general, do not include events due to sabotage. No established method exists for estimating the likelihood of a sabotage event. Nor is there a method for analyzing the effect of security provisions on that likelihood. Security regulations are based on a zero tolerance for sabotage, involving special nuclear material - which includes spent fuel; the regulations are designed and structured to remove sabotage from design basis threats at a commercial nuclear power plant, regardless of the probability or consequences.

The technical information contained in this report shows that the consequences of a zirconium fire would be high enough to justify provisions to prevent sabotage. Moreover, the risk analysis could be used effectively to assist in determining priorities for, and details of, the security capability at a plant. However, there is no information in the analysis that bears on the level of security necessary to limit the risk from sabotage events. Those decisions will continue to be made based on a deterministic assessment of the level of threat and the difficulty of protecting the facility.

In an associated regulatory arena, 10 CFR 73.51, "Physical Protection for Spent Nuclear Fuel and High-Level Radioactive Waste," allows facilities not associated with an operating power reactor to store spent fuel at an independent spent fuel storage installation (ISFSI). This rule provides performance-based regulations specifically designed for these types of storage installations, i.e., fuel in dry cask containers or other storage formats.

Ex 5

The proposed rulemaking would provide regulations specifically applicable to power reactor sites that have permanently ceased operations. The new rulemaking would codify and

consolidate current regulations at a level commensurate with the reduced potential of sabotage at permanently shutdown sites. To develop this rulemaking, we will review existing regulations in 10 CFR 73.55 and determine what requirements are necessary for a permanently shutdown power reactor. After analyzing the security areas that need to be protected, we will eliminate requirements that are beyond the protection strategy needed for a permanently shutdown power reactor site and its capability to preclude a radiological release that could impact public health and safety.

The staff also noted that the applicability of 10 CFR 26 [Ref 10] has not been established for decommissioning reactors once the fuel has been removed from the reactor vessel and placed in the SFP, and specifically does not apply to ISFSIs licensed under 10 CFR 72. Given the importance of a vehicle bomb threat to the integrity of SFP, and the significance of HRA to the conclusions reached in the SFP risk analysis, the staff recommends that for coherency in the regulations, both of these subjects be revisited during the overall integration of rules for decommissioning reactors.

4.3.3 Insurance

In accordance with 10 CFR 140 [Ref. 11], each 10 CFR 50 licensee is required to maintain public liability coverage in the form of primary and secondary financial protection. This coverage is required to be in place from the time unirradiated fuel is brought onto the facility site until all the radioactive material has been removed from the site, unless the Commission terminates the Part 50 license or otherwise modifies the financial protection requirements. The industry has asked the NRC to consider whether the likelihood of large scale radiological releases from decommissioning plants is low enough to justify modification of the financial protection requirements once the plant is permanently shutdown and prior to complete removal of all radioactive material from the site.

In the past, licensees have been granted exemptions from financial protection requirements on the basis of deterministic analyses showing that a zirconium fire could no longer occur. The analysis in this report supports continuation of this practice in the interim, and would support a revised regulatory framework for decommissioning plants that eliminates the need for insurance protection when a plant-specific thermal-hydraulic analysis demonstrates that a zirconium fire can no longer occur.

The NRC staff has considered whether the risk analysis in this report justifies relief from this requirement for decommissioning plants during the period when they are vulnerable to zirconium fires. As part of this effort, the staff determined that an analogy can be drawn between a SFP at a decommissioning plant and a wet (as opposed to dry) Independent Spent Fuel Storage Installation (ISFSI) licensed under 10 CFR 72 for which no indemnification

requirement currently exists. Spent reactor fuel aged for one year can be stored in an ISFSI (wet or dry). The risk analysis in this report predicts high consequences for a zirconium fire, and identifies a generic window of vulnerability out to 5 years. The Commission has suggested in the staff requirements memorandum (SRM) for SECY-93-127 [Ref. 12] that insurance coverage is required unless a large scale radiological release is deemed incredible. Further, they instructed the staff to determine more precisely the appropriate spent fuel cooling period after plant shut down, and to determine the need for primary financial protection for ISFSIs.

Since the consequences are high, frequency of a zirconium fire occurring in a wet ISFSI or a decommissioning reactor SFP would have to be acceptably low to justify no regulatory requirement for indemnification protection. A dry ISFSI is not under consideration since the fuel is already air cooled and no threat of zirconium fire exists. The zirconium fire frequencies presented in Chapter 3 for a decommissioning reactor SFP do not fit the category of incredible. They are comparable to the frequencies of large releases from some operating reactors. The staff is not aware of any basis for concluding that the frequency of a zirconium fire occurring in a wet ISFSI would be significantly different than those presented in Chapter 3, and thus would conclude that indemnification should be required for operation of a wet ISFSI to be consistent with a decommissioning reactor SFP and provide for coherency in the regulations.

The staff knows of no frequency criterion which could be cited to justify reduction or elimination of the insurance requirement while a vulnerability to zirconium fire exists. Defining or applying such a criterion would be inconsistent with Commission direction provided in SECY-93-127. On the other hand, the possibility exists that the 5 year window of vulnerability could be reduced with more refined thermal-hydraulic calculations or other constraints on such parameters as fuel configuration. The staff would be receptive to an industry initiative designed to advance the state of the art in this area such that the period of vulnerability to zirconium fire could be reduced.

5.0 References

References for Executive Summary

1. U.S. Nuclear Regulatory Commission, "An Approach for Using Probabilistic Risk Assessment In Risk-Informed Decisions On Plant-Specific Changes to the Licensing Basis," Regulatory Guide 1.174, July 1998.
2. Dana A. Powers, Chairman of the Advisory Committee on Reactor Safeguards, U.S. Nuclear Regulatory Commission, letter to Dr. William D. Travers, U.S. Nuclear Regulatory Commission, "Spent Fuel Fires Associated With Decommissioning," November 12, 1999.
3. U.S. Code of Federal Regulations, "Standards for Protection Against Radiation," Part 20, Title 10, "Energy."

References for Chapter 1.0

1. U.S. Code of Federal Regulations, "Domestic Licensing of Production and Utilization Facilities," Part 50, Title 10, "Energy."

References for Chapter 2.0

1. U.S. Nuclear Regulatory Commission, "Use of Probabilistic Risk Assessment Methods in Nuclear Regulatory Activities; Final Policy Statement," Federal Register, Vol. 60, No. 158, August 16, 1995/ Notices.
2. U.S. Nuclear Regulatory Commission, "An Approach for Using Probabilistic Risk Assessment In Risk-Informed Decisions On Plant-Specific Changes to the Licensing Basis," Regulatory Guide 1.174, July 1998.
3. U.S. Code of Federal Regulations, "Requirements for Monitoring the Effectiveness of Maintenance at Nuclear Power Plants," Section 65, Part 50, Title 10, "Energy."

References for Chapter 3.0

1. Dana A. Powers, Chairman of the Advisory Committee on Reactor Safeguards, U.S. Nuclear Regulatory Commission, letter to Dr. William D. Travers, U.S. Nuclear Regulatory Commission, "Spent Fuel Fires Associated With Decommissioning," November 12, 1999.
2. U.S. Nuclear Regulatory Commission, "Regulatory Analysis for the Resolution of Generic Safety Issue 82, "Beyond design Basis Accidents in Spent Fuel Pools," NUREG-1353, April 1989.
3. U.S. Nuclear Regulatory Commission, " Operating Experience Feedback Report-Assessment of Spent Fuel Cooling," NUREG-1275, Volume 12, February 1997.
4. U.S. Nuclear Regulatory, "Control of Heavy Loads at Nuclear Power Plants, Resolution of Generic Technical Activity A-36," NUREG-0612, July 1980.
5. Sailor, et.al., "Severe Accidents in Spent Fuel Pools in Support of Generic Safety Issue 82", NUREG/CR-4982 (BNL-NUREG-52093), July 1987.
6. DOE-STD-3014-96, "Accident Analysis for Aircraft Crash Into Hazardous Facilities," U.S. Department of Energy, October 1996.

7. NUREG/CR-2944, "Tornado Damage Risk Assessment," Brookhaven National Laboratory, September 1982.

References for Chapter 4.0

1. Lynnette Hendricks, Nuclear Energy Institute, letter to Office of Nuclear Reactor Regulation, dated November 12, 1999.
2. U.S. Nuclear Regulatory Commission, "An Approach for Using Probabilistic Risk Assessment In Risk-Informed Decisions On Plant-Specific Changes to the Licensing Basis," Regulatory Guide 1.174, July 1998.
3. U.S. Nuclear Regulatory Commission, "Boraflex Degradation in Spent Fuel Pool Storage Racks," Generic Letter 96-04, June 1996.
3. U.S. Code of Federal Regulations, "Emergency Plans," Section 47, Part 50, Title 10, "Energy."
5. U.S. Code of Federal Regulations, "Emergency Planning and Preparedness For Production and Utilization," Appendix E, Part 50, Title 10, "Energy."
6. U.S. Code of Federal Regulations, "Planning Basis For The Development Of State and Local Government Radiological Emergency Response Plans In Support of Light Water Nuclear Power Plants," NUREG-0396, December 1978.
7. U.S. Code of Federal Regulations, "Requirements for Physical Protection of Licensed Activities in Nuclear Power Reactors Against Radiological Sabotage," Section 55, Part 73, Title 10, "Energy."
8. U.S. Code of Federal Regulations, "Requirements for Physical Protection of Licensed Activities," Section 50, Part 73, Title 10, "Energy."
9. U.S. Code of Federal Regulations, "Licensing Requirements for the Independent Storage of Spent Nuclear Fuel and High-Level Radioactive Waste," Part 72, Title 10, "Energy."
10. U.S. Code of Federal Regulations, "Fitness for Duty Programs," Part 26, Title 10, "Energy."
11. U.S. Code of Federal Regulations, "Financial Protection Requirements and Indemnity Agreements," Part 140, Title 10, "Energy."
12. U.S. Nuclear Regulatory Commission, "Financial Protection Required of Licensees of Large Nuclear Power Plants During Decommissioning," SECY-93-127, dated July 13, 1993.

6.0 Acronyms

ACRS	Advisory Committee on Reactor Safeguards
ANSI	American National Standard Institute
ANS	American Nuclear Society
ASB	NRC Auxiliary Systems Branch (Plant Systems Branch)
atm	atmosphere
BNL	Brookhaven National Laboratory
BTP	branch technical position
BWR	boiling water reactor
CFD	computational fluid dynamics
CFM	cubic feet per minute
CFR	Code of Federal Regulations
DIC	decommissioning industry commitments
DOE	Department of Energy
DSP	decommissioning status plant
DSR	decommissioning staff requirement
ECCS	emergency core cooling system
EP	emergency plan
EPRI	Electric Power Research Institute
ET	event tree
FFU	frequency of fuel uncovery
FT	fault tree
gpm	gallon(s) per minute
GSI	generic safety issue
GWD	gigawatt-day
HCLPF	High-Confidence/Low probability of failure
HRA	human reliability analysis
HVAC	heating, ventilation, and air conditioning
INEEL	Idaho National Engineering and Environmental Laboratory
ISFSI	independent spent fuel pool installation
kW	kilowatt
LERF	large early release frequency
LLNL	Lawrence Livermore National Laboratory
LOSP	loss of offsite power
LWR	light water reactor

MR	maintenance rule
MW	megawatt
MWD	megawatt-day
MTU	megaton uranium
NEI	Nuclear Energy Institute
NRC	Nuclear Regulatory Commission
NRR	NRC Office of Nuclear Reactor Regulation
POE	probability of exceedance
POF	probability of failure
PRA	probabilistic risk assessment
PWR	pressurized water reactor
QA	quality assurance
RES	NRC Office of Research
RG	regulatory guide
SF	spent fuel
SFP	spent fuel pool
SFPC	spent fuel pool cooling system
SFPCC	spent fuel pool cooling and cleaning system
SNL	Sandia National Laboratory
SRM	staff requirements memorandum
SRP	standard review plan
SSC	systems, structures, and components
SSE	safe shutdown earthquake
TS	technical specification
UKAEA	United Kingdom Atomic Energy Authority
WIPP	Waste Isolation Pilot Plant

4.3.2 Security

Currently licensees that have permanently shutdown reactor operations and have offloaded the spent fuel into the SFP are still required to meet all the security requirements for operating reactors in 10 CFR 73.55 [Ref 7]. This level of security would require a site with a permanently shutdown reactor to provide security protection at the same level as that for an operating reactor site. The industry has asked the NRC to consider whether the risk of radiological release from decommissioning plants due to sabotage is low enough to justify modification of safeguards requirements for SFPs at decommissioning plants.

In the past, decommissioning licensees have requested exemptions from specific regulations in 10 CFR 73.55, justifying their requests on the basis of a reduction in the number of target sets susceptible to sabotage attacks, and the consequent reduced hazard to public health and safety. Limited exemptions based on these assertions have been granted. The risk analysis in this report does not take exception to the reduced target set argument; however, the analysis does not support the assertion of a lesser hazard to public health and safety, given the consequences that can occur from a sabotage induced uncovery of fuel in the SFP when a zirconium fire potential exists. Further, the risk analysis in this report did not evaluate the potential consequences of a sabotage event that could directly cause off-site fission product dispersion, for example from a vehicle bomb that was driven into the SFP even if a zirconium fire was no longer possible. However, this report would support a regulatory framework that relieves licensees from selected requirements in 10 CFR 73.55 on the basis of target set reduction when all fuel has been placed in the SFP.

The risk estimates contained in this report are based on accidents initiated by random equipment failures, human errors or external events. PRA practitioners have developed and used dependable methods for estimating the frequency of such random events. By contrast, this analysis, and PRA analyses in general, do not include events due to sabotage. No established method exists for estimating the likelihood of a sabotage event. Nor is there a method for analyzing the effect of security provisions on that likelihood. Security regulations are based on a zero tolerance for sabotage involving special nuclear material - which includes spent fuel. The regulations are designed and structured to remove sabotage from design basis threats at a commercial nuclear power plant, regardless of the probability or consequences.

The technical information contained in this report shows that the consequences of a zirconium fire would be high enough to justify provisions to prevent sabotage. Moreover, the risk analysis could be used effectively to assist in determining priorities for, and details of, the security capability at a plant. However, there is no information in the analysis that bears on the level of security necessary to limit the risk from sabotage events. Those decisions will continue to be made based on a deterministic assessment of the level of threat and the difficulty of protecting the facility.

10 CFR [Ref. 8] allows facilities not associated with an operating power reactor to store spent fuel at an independent spent fuel storage installation (ISFSI). 10 CFR 73.51 failed to account for the risk posed by vehicle-borne bombs at facilities where potential criticality and fuel heatup were still issues. The staff also noted that the applicability of 10 CFR 26 [Ref 9] has not been established for decommissioning reactors once the fuel has been removed from the reactor vessel and placed in the SFP, and specifically does not apply to ISFSIs licensed under 10 CFR 72. Given the importance of a vehicle bomb threat to the integrity of SFP, and the significance of HRA to the conclusions reached in the SFP risk analysis, the staff recommends that for

coherency in the regulations, both of these subjects be revisited during the overall integration of rules for decommissioning reactors.

4.3.3 Insurance

In accordance with 10 CFR 140 [Ref. 10], each 10 CFR 50 licensee is required to maintain public liability coverage in the form of primary and secondary financial protection. This coverage is required to be in place from the time unirradiated fuel is brought onto the facility site until all the radioactive material has been removed from the site, unless the Commission terminates the Part 50 license or otherwise modifies the financial protection requirements. The Commission has asked the staff to consider whether the likelihood of large scale radiological releases from decommissioning plants is low enough to justify modification of the financial protection requirements once the plant is permanently shutdown and prior to complete removal of all radioactive material from the site.

In the past, licensees have been granted exemptions from financial protection requirements on the basis of deterministic analyses showing that a zirconium fire could no longer occur. The analysis in this report supports continuation of this practice, and would support a revised regulatory framework for decommissioning plants that eliminates the need for insurance protection when a plant-specific thermal-hydraulic analysis demonstrates that a zirconium fire can no longer occur.

The NRC staff has considered whether the risk analysis in this report justifies relief from this requirement for decommissioning plants during the period when they are vulnerable to zirconium fires. As part of this effort, the staff determined that an analogy can be drawn between a SFP at a decommissioning plant and a wet (as opposed to dry) Independent Spent Fuel Storage Installation (ISFSI) licensed under 10 CFR 72 for which no indemnification requirement currently exists. Spent reactor fuel aged for one year can be stored in an ISFSI (wet or dry). The risk analysis in this report indicates high consequences for a zirconium fire, identifies a generic window of vulnerability out to 5 years, and concludes that the predicted frequency of such an accident is within the acceptance guidelines of RG 1.174, provided certain constraints are met. The Commission has suggested in the staff requirements memorandum (SRM) for SECY-93-127 [Ref. 11] that insurance coverage is required unless the potential for a large scale radiological release is deemed to be sufficiently remote. Further, they instructed the staff to determine more precisely the appropriate spent fuel cooling period after plant shut down, and to determine the need for primary financial protection for ISFSIs.

Since the consequences are high, the frequency of a zirconium fire occurring in a wet ISFSI or a decommissioning reactor SFP would have to be acceptably low to justify no regulatory requirement for indemnification protection. A dry ISFSI is not under consideration since the fuel is already air cooled and no threat of zirconium fire exists. The zirconium fire frequencies presented in Chapter 3 for a decommissioning reactor SFP are comparable to the frequencies of large releases from some operating reactors, and are within the LERF guidelines of RG 1.174. The staff is not aware of any basis for concluding that the frequency of a zirconium fire occurring in a wet ISFSI during the 5 year window of vulnerability would be significantly different than those presented in Chapter 3.

The staff knows of no frequency criterion which could be cited to justify reduction or elimination of the insurance requirement while a vulnerability to zirconium fire exists. However, SECY-93-127 indicates that any reduction in the level of required primary financial protection turns on a technical/policy judgement by the Commission whether there exists a potential which should be insured against. The potential for a zirconium fire occurring at a decommissioning plant SFP has been described in this risk study to meet the LERF guidelines in RG 1.174 after

a decay time of one year, provided certain conditions are satisfied. On a deterministic basis, the possibility exists that the 5 year window of vulnerability could be reduced with more refined thermal-hydraulic calculations or other constraints on such parameters as fuel configuration. The staff would be receptive to a plant specific or industry initiative designed to advance the state of the art in this area such that the predicted period of vulnerability to zirconium fire could be reduced.

(42) #1 p8

1/31/00 3:00

Formatted Version, Rev. 5 1/28/00 1100 hours

Appendix 1 Thermal Hydraulics

1. Spent Fuel Heatup Analyses

Spent fuel heatup analyses model the decay power and configuration of the fuel to characterize the thermal hydraulic phenomena that will occur in the SFP and the building following a postulated loss of water accident. This appendix reviews the existing studies on spent fuel heatup and zirconium oxidation, the temperature criteria used in the analyses, and how it applies to decommissioned plants.

1.1 Spent Fuel Failure Criteria

Several different fuel failure criteria have been used in previously NRC-sponsored SFP accident studies. Benjamin, et. al used the onset of runaway fuel clad oxidation as the fuel failure criterion in NUREG/CR-0649 [Ref. 1]. This criterion was criticized because clad rupture can occur at a relatively low temperature causing a gap release. The consequences of gap release can be significant if the radioactive iodine has not yet decayed to insignificant amounts. SHARP calculations [Ref. 2] used the onset of clad swelling as an acceptance criterion for prevention of fuel failure. The onset of clad swelling leading to gap release occurs at approximately 565 °C, which corresponds to the temperature for 10-hour creep rupture time [Ref. 3]. A cladding temperature of 570 °C is used as a thermal limit under accident conditions for licensing of spent fuel dry storage casks.

The most severe fuel damage would be caused by rapid, runaway zirconium oxidation. This would lead to significant fission product release even after the gap activity has become insignificant. The onset of rapid oxidation may occur as low as 800 °C [Ref. 4]. Runaway oxidation can raise clad and fuel temperatures to approximately 2000 °C which corresponds to the melting temperature of zirconium. The release of fission products trapped in the fuel can occur at fuel temperatures of approximately 1400-1500 °C. Runaway oxidation starting in a high-powered channel could also propagate through radiative and convective heat transfer to lower power assemblies because of the large heat reaction in zirconium oxidation.

There are several other temperature thresholds that may be of concern in SFP accidents. The melting temperature of aluminum, which is a constituent in BORAL poison plates in some types of the spent fuel storage racks, is approximately 640 °C. No evidence was found that boron carbide would dissolve in the aluminum forming a eutectic mixture that liquefies at a temperature below the melting point of aluminum. However, if it is possible for a molten material to leak from the stainless steel spent fuel storage rack case, melting and relocation of the aluminum in the boron carbide-aluminum composite may cause flow blockages that increase hydraulic resistance. No realistic evaluation of melting and relocation of aluminum or aluminum/boron carbide eutectic has been performed.

Another concern is the structural integrity of the fuel racks at high temperatures. Several eutectic mixtures known from reactor severe accident research [Ref. 5] may be important in SFP accidents. As previously stated, the formation of an eutectic mixture allows liquification and loss of structural integrity for a mixture of materials at a lower temperature than the melting point of any of the component materials. Steel and zirconium form an eutectic mixture at

approximately 935 °C. Steel and boron carbide form a eutectic mixture at approximately 1150 °C. The steel racks may not be able to maintain structural integrity because of the sustained loads at high temperatures. Loss of rack integrity may affect the propagation of a zirconium fire.

If the gap radioactivity inventory is significant, then the spent fuel cladding temperature must be kept below 565 °C. If the consequences of aluminum/boron carbide relocation are acceptable, then 800 °C is a reasonable deterministic acceptance temperature, if uncertainties are less than the margin to 800 °C, and the effects of higher temperatures on the material are modeled. Otherwise, the temperature must be lower than the aluminum melting point (640 °C) or the aluminum/boron carbide eutectic melting point.

1.2 Evaluation of Existing Spent Fuel Heatup Analyses

In the 1980's, severe accidents in operating reactor SFPs were evaluated to assess the significance of the results of some laboratory studies on the possibility of self-sustaining zirconium oxidation and fire propagation between assemblies in an air-cooled environment, and also to assess the impact of the increase in the use of high density spent fuel storage racks on severe accidents in spent fuel pools. This issue was identified as Generic Safety Issue (GSI) 82. Sandia National Laboratory (SNL) and Brookhaven National Laboratory (BNL) used the SFUEL and SFUEL1W computer codes to calculate spent fuel heatup in these studies. While decommissioned plants were not addressed in the study, many of the insights gained from these studies are applicable to decommissioned plants.

More recently, BNL developed a new computer code, SHARP, that was intended to provide a simplified analysis method to model plant-specific spent fuel configurations for spent fuel heatup calculations at decommissioned plants. Some of this work was built on the assumption used by SNL and BNL in their studies in support of GSI 82.

1.2.1 SFUEL Series Based Analyses

Extensive work on the phenomena of zirconium oxidation in air for a SFP configuration was performed by SNL and BNL in support of GSI 82. SNL investigated the heatup of spent fuel, the potential for self-sustaining zirconium oxidation, and the propagation to adjacent assemblies [Ref. 1, 6]. SNL used SFUEL and SFUEL1W computer codes to analyze the thermal-hydraulic phenomena, assuming complete drainage of the SFP water. In NUREG/CR-4982 [Ref. 4], BNL extended the SNL studies on the phenomenology of zirconium-air oxidation and its propagation in spent fuel assemblies. The SFUEL series of codes includes all modes of heat transfer, including radiation. However, radiation heat transfer may have been underestimated due to the assumed fuel bundle arrangement.

In NUREG/CR-0649, SNL concluded that decay heat and configuration are important parameters. SNL found that key configuration variables are the baseplate hole size, downcomer width, and the availability of open spaces for airflow. They also found that building ventilation is an important configuration variable.

The draft SNL report investigated the potential for oxidation propagation to adjacent assemblies. If decay heat is sufficient to raise the clad temperature in a fuel assembly to within approximately one hundred degrees of the point of runaway oxidation, then the radiative heat from an adjacent assembly that reached the onset of rapid oxidation could raise the temperature of the first assembly to the runaway oxidation temperature. The report also discusses small-scale experiments involving clad temperatures greater than 1000 °C. SNL hypothesized that molten zirconium material would slump or relocate towards the bottom of the racks and consequently would not be involved in the oxidation reaction. NUREG/CR-4982 did not allow oxidation to occur at temperatures higher than 2100 °C to account for the zirconium melting and relocation. Otherwise, temperatures reached as high as 3500 °C. It was felt that not cutting off the oxidation overstated the propagation of a zirconium fire because of the fourth power temperature dependence of the radiation heat flux. The SFUEL series of codes did not model melting and relocation of materials.

In NUREG/CR-4982, BNL reviewed the SFUEL code and compared it to the SNL small-scale experiments and concluded that SFUEL was a valuable tool for assessing the likelihood of self-sustaining clad oxidation for a variety of spent fuel configurations in a drained pool. SNL reported the following critical decay times in NUREG/CR-0649 based on having no runaway oxidation. Critical decay time is defined as the length of time after shutdown when the most recently discharged fuel temperature will not exceed the chosen fuel failure criteria when cooled by air only.

700 days PWR, 6 kW/MTU decay power per assembly, high density rack, 10.25" pitch, 5" orifice, 1-inch from storage wall

280 days PWR, same as above except for 1 foot from storage wall

180 days BWR, 14 kW/MTU decay power per assembly, cylindrical baskets, 8.5" pitch, 1.5" orifice

unknown BWR, high-density rack, SFUEL1W code was limited to computation of BWR low-density racks.

High-density racks with a 5-inch orifice are the most representative of current storage practices. A critical decay time for high-density BWR racks was not provided due to code limitations. Low-density and cylindrical storage rack configurations are no longer representative of spent fuel storage. All currently operating and recently shutdown plants have some high-density racks in the pool. For an assembly in a high-density PWR rack with a 5-inch orifice, a decay power below 6 kW/MTU did not result in runaway zirconium oxidation. All of these estimates were based on perfect ventilation (i.e., unlimited, ambient-temperature air) and burnup rates of 33 GWD/MTU. Currently, some PWRs are permitted to burn up to 62 GWD/MTU and some BWRs to 60 GWD/MTU. For fuel burnup of 60 GWD/MTU, the staff estimates the decay time for a bundle to reach 6 kW/MTU will increase from 2 years to approximately 3 years. Therefore, the staff expects the difference between critical decay times for PWRs and BWRs to decrease and that the BWR critical decay time for current burnups and rack designs would now be longer than the SNL estimate for high-density PWR racks. The SNL calculations also do not appear to have included grid spacer loss coefficients, which can have a significant effect since

the resistance of the grid spacers is greater than the resistance of a 5-inch orifice. There is no mixing between the rising air leaving the fuel racks, and the relatively cooler air moving down into the pool. Including the grid spacer resistance, accounting for mixing and limiting the building ventilation flow to rated conditions, will result in the critical decay power to be less than 6 kW/MTU. The SNL calculations may have understated the effective radiation heat transfer heat sink due to the assumed fuel geometry in the calculations. A more realistic fuel configuration pattern in the SFP would give a better estimate of the radiation heat sink and raise the critical decay power needed for significant oxidation.

While the studies in support of GSI 82 provided useful insights to air-cooled spent fuel assemblies, it is the opinion of the staff that they do not provide an adequate basis for exemptions. The studies were not meant to establish exemption criteria and lack sufficient information for all the parameters that could affect the decay time. Additionally, the reports are based on burnup values at that time. Since burnup values have increased, the results may not be directly applicable to today's spent fuel.

The general conclusions and the phenomena described in the studies assist in assessing issues for decommissioned plants. However, the calculated decay time values do not represent current plant operational and storage practices.

1.2.2 SHARP Based Analyses

In NUREG/CR-6451 [Ref. 7], BNL investigated spent fuel heatup that could lead to a zirconium fire at permanently shutdown plants. BNL developed a new computer code, SHARP (Spent Fuel Heatup Analytical Response Program), to calculate critical decay times to preclude zirconium oxidation for spent fuel. The code was intended to study thermal hydraulic characteristics and to calculate spent fuel heatup up to temperatures of approximately 600 °C. SHARP is limited to low temperatures since it lacks models for radiation heat transfer, zirconium oxidation, and materials melting and relocating. SHARP also lacks modeling for grid spacer losses and neglects mixing between the rising hot air and the falling cooler air in the SFP. BNL reported the following generic critical decay times using the SHARP code.

17 months for a PWR, high density rack, 60 GWD/MTU burnup; 10.4" pitch; 5" orifice
7 months for a BWR, high density rack, 40 GWD/MTU burnup; 6.25" pitch; 4" orifice

The above decay times are based on a maximum cladding temperature of 565 °C. The parameters listed with the critical decay times are generally representative of operating practices. Current fuel burnups in some plants, however, have increased to values higher than those used by BNL and perfect ventilation was assumed, which could lead to an underestimation of the critical decay times.

The SHARP code was not significantly benchmarked, validated or verified. The critical decay times above are shorter than those calculated in NUREG/CR-0649 and NUREG/CR-4982, particularly when the lower cladding temperature used for fuel failure and the higher decay heats used in the earlier analyses are taken into account. This appears to be driven in part, by the fact that the decay heat at a given burnup in the SHARP calculations is significantly lower than what is used in the SFUEL calculations. The staff has identified several areas that require

code modifications, which will increase the calculated critical decay times. It is not adequate for use as technical bases by licensees without further code modifications and verification. NUREG/CR-6541 was intended as an assessment to steer rulemaking activities. The report was neither intended nor structured to provide a basis for exemptions. The staff does not rely on this study for heatup analysis information due to the code that the decay time conclusions were based upon.

1.3 Heatup Calculation Uncertainties and Sensitivities

The phenomenology needed to model spent fuel heatup is dependent on the chosen cladding temperature success criterion and the assumed accident scenario. Many assumptions and modeling deficiencies exist in the current calculations. The staff reviewed the models to assess the impact of those modeling assumptions. Some of these uncertainties for the SFUEL series codes are further discussed in NUREG/CR-4982. For cases of flow mixing, decay heat, bundle flow resistance and other severe accident phenomena, additional information is provided here.

Calculations performed to date assume that the building, fuel, and rack geometry remain intact. This would not be a valid assumption if a seismic event or a cask drop damaged some of the fuel racks or the building. Rack integrity may not be a good assumption after the onset of significant zirconium oxidation due to fuel failure criteria issues discussed in Section 1.1. The building may also be hot enough to ignite other materials. Assuming that the racks remain intact is the most optimistic assumption that can be made about the rack geometry. Any damage to the racks or the building could significantly reduce the coolability of the fuel.

Previous SFUEL, SFUEL1W, and SHARP calculations, used in the resolution of GSI 82 and decommissioning studies, used a perfect ventilation assumption. With the perfect ventilation assumption an unlimited amount of fresh, ambient-temperature air is available. This assumption would be valid if the building failed early in the event or if large portions of the walls and ceilings were open. If the building does not fail, the spent fuel building ventilation flow rate would dictate the airflow available. Mixing between the rising hot air and the descending cooler air in the spent fuel pool is not modeled in the codes.

The spent fuel building ventilation flow rate is important in determining the overall building energy balance. Airflow through the building is an important heat removal mechanism. Most of the air would recirculate in the building and the air drawn under the racks would be higher than ambient temperature and, therefore, less heat removal would occur. Airflow also provides a source of oxygen for zirconium oxidation. Sensitivity studies have shown that heatup rates increase with decreasing ventilation flow, but that very low ventilation rates limit the rate of oxidation. Other oxidation reactions (fires) that occur in the building will also deplete available oxygen in the building. Zirconium-Nitrogen reaction modeling is not included in the SFUEL code and may have an impact on zero and low ventilation cases. GSI 82 studies concluded that the perfect ventilation assumption was more conservative than no ventilation because the oxidation reaction became oxygen starved with no ventilation. These studies did not consider the failure modes of the building under high temperature scenarios. Intermediate ventilation rate results were not studied and give longer critical decay times than the perfect ventilation case.

A key fuel heat removal mechanism is buoyancy-driven natural circulation. The calculated airflow and peak temperatures are very sensitive to flow resistances in the storage racks, fuel bundles and downcomer. The downcomer flow resistance is determined by the spacing between the fuel racks and the wall of the SFP. The storage rack resistance is determined by the orifice size at the bottom entrance to the fuel bundle. Smaller inlet orifices have higher flow resistance. As shown by SFUEL and SHARP calculations, changes in the rack-wall spacing and the orifice size over the range of designs can shift critical decay times by more than a year. The fuel bundle flow resistance is determined by the rod spacing, the grid spacers, intermediate flow mixers and the upper and lower tie plates. SFUEL and SHARP calculations have neglected the losses from the grid spacers, intermediate flow mixers and the tie plates. These flow resistances will be higher than those from the rack inlet orifice in some cases. Therefore, inclusion of this additional flow resistance may significantly extend the critical decay time for some cases. NUREG/CR-4982 concluded that the largest source of uncertainty was due to the natural circulation flow rates.

The downcomer and bundle inlet air temperatures and mass flow rates are important in determining the peak cladding temperature. The extent of flow mixing will determine the air temperatures at the downcomer and bundle inlet. The SFUEL and SHARP calculations assume a well-mixed building air space. The downcomer inlet temperature is set equal to the building temperature. This assumption neglects the mixing that occurs between the hot air rising from the bundles and the cooler air descending down the SFP wall. Computational fluid dynamics calculations performed by the NRC Office of Research (RES) using the FLUENT code and Pacific Northwest National Laboratory using the TEMPEST code indicates that the well-mixed building is not a good assumption. The mixing that occurs between the cool air flowing down into the pool and the hot air flowing up out of the fuel bundles can significantly increase peak cladding temperatures. Even using different turbulent mixing models can affect the peak temperatures by approximately 100 °C. The calculations indicate that fully 3-dimensional calculations may be needed to accurately predict the mixing because unrealistic flow topologies in 2-dimensional approximations may overstate the mixing. The calculations also indicate that the quasi-steady state assumptions for conditions above the fuel rack may not be appropriate. Time varying temperature fluctuations on the order of 100 °C have been observed in 3D calculations.

Radiation heat transfer is important in spent fuel pool heatup calculations. Radiation heat transfer can affect both the onset of a zirconium fire and the propagation of a fire. Both the SFP loading pattern and the geometry of the fuel racks can affect the radiation heat transfer between adjacent bundles. Simple gray body calculations show that at clad temperatures of 800 °C, a temperature difference of 100 °C between adjacent bundles would cause the radiation heat flux to exceed the critical decay power of 6 kW/MTU. Therefore, the temperature difference that could be maintained between adjacent bundles is highly constrained by the low decay heat levels. SFUEL calculations performed by SNL and BNL included radiation heat transfer, but the radiation heat transfer was underpredicted since the spent fuel placement is two-dimensional and the hottest elements are in the middle of the pool with cooler elements placed progressively toward the pool walls. Heat transfer between hotter and cooler assemblies has the potential to be significantly higher if the fuel bundles were intermixed in a realistic loading pattern.

At temperatures below 800 °C, the SFP heat source is dominated by the spent fuel decay heat. SNL and BNL found that, for high-density PWR racks, that 6 kW/MTU was the critical decay heat level for a zirconium fire to occur in configurations resembling current fuel storage practices. At the fuel burnups used in the calculations, this critical decay heat level was reached after two years. Decay heat calculations in NUREG/CR-5625 [Ref. 8] were performed to be the basis for calculating fuel assembly decay heat inputs for dry cask storage analyses. These decay heat calculations are consistent with the decay heat used in SFUEL calculations. Extrapolation of the decay heat calculations from NUREG/CR-5625 to current burnups indicate that approximately 3 years will be needed to reach a decay heat of 6 kW/MTU. The extrapolation has been confirmed to provide a reasonable decay heat approximation by performing ORIGEN calculations that extend to higher burnup. The critical decay heat may actually be as low as 3kW/MTU when in-bundle peaking effects, higher density rack configurations and rated build ventilation flows are taken into account.

Several licensees have proposed using the current Standard Review Plan (NUREG-0800) Branch Technical Position ASB 9-2 decay heat model for SFP heatup calculations. Using ASB 9-2 decay heat with a "k factor" of 0.1 produces non-conservative decay heat values in the range of 1 to 4 years after shutdown. ASB 9-2 explicitly states that it is good for times less than 10,000,000 seconds (~ 116 days). The basis of ASB 9-2 is the 1971 ANS draft decay heat standard. The standard gives "k factors" to use beyond 10,000,000 seconds. The staff has found that a "k factor of 0.2" will produce conservative decay heat values compared to ORIGEN calculations for the range of 1 to 4 years after shutdown.

1.4 Zirconium Oxidation Temperature

At temperatures below the onset of self-sustaining oxidation, decay heat of the fuel dominates the heat source. When zirconium reaches temperatures where air oxidation is significant, the heat source is dominated by oxidation. The energy of the reaction is 262 kcal per mole of zirconium. In air, the oxidation rate and the energy of the reaction is higher than zirconium-steam oxidation. Much less data exists for zirconium-air oxidation than for zirconium-steam oxidation. A large amount of data exists for zirconium-steam oxidation because of the large amount of research performed under the ECCS research program [Ref. 9]. If all of the zirconium in a full 17x17 PWR fuel bundle fully oxidizes in air over the period of an hour, the average power from the oxidation is 0.3 MW. The critical decay heat as determined with SFUEL is approximately 2.7 kW for the bundle. The oxidation power source would amount to approximately 60 MW if the whole core was burning. A 20,000 cubic feet per minute (CFM) airflow rate is needed to support that reaction rate based on 100-percent oxygen utilization. The SFUEL oxidation rate was modeled using several parabolic rate equations based on available data. SFUEL had limited verification against SNL experiments that studied the potential of zirconium fire propagation. BNL determined that although they could not find a basis for rejecting the oxidation rate model used in SFUEL, uncertainties in oxidation of zirconium in air could change the critical decay heat by up to 25-percent. It was found that the onset of runaway zirconium oxidation could occur at temperatures as low as 800 °C. Different alloys of zirconium had oxidation rates that vary by as much as a factor of four. Apparently it was found that oxidation in air was worse than oxidation in pure oxygen. This suggests that the nitrogen concentration can have a significant impact on the oxidation rate. Since the relative concentration of oxygen and nitrogen varies as oxygen is consumed this causes additional

uncertainty in the oxidation rate. The oxidation was cut off at 2100 °C in the BNL calculations in support of GSI 82. This was done to simulate zirconium clad relocation when the melting point of zirconium was reached. If the oxidation was not cut off, temperatures could reach as high as 3500 °C. It was felt the propagation to adjacent bundles was overpredicted if no cutoff temperature is used due to the fourth power dependence of temperature on the radiation heat fluxes.

The combustion literature cited in the June 1999 draft report shows that there is a large range in the temperature for zirconium ignition in air. Evidence cited from the literature states that bulk zirconium cannot ignite at temperatures lower than 1300-1600 °C. It is known from the extensive emergency core cooling system (ECCS) and severe accident research programs that zirconium-steam runaway oxidation occurs at temperatures below 1300 °C. Since oxidation in air occurs more rapidly than oxidation in steam, temperatures in this range are not credible for the onset of runaway oxidation in air. Correlations listed [Ref. 10] give ignition temperatures for small zirconium samples in the range of runaway oxidation computed by the SFUEL series codes when the geometry factors calculated from zirconium cladding are input into the correlations. Only one reference [Ref. 11] appears to be applicable to zirconium oxidation in sustained heating of fuel rods. In the referenced test, sections of zirconium tubing were oxidized at temperatures of 700 °C, 800 °C and 900 °C for 1 hour. The average oxidation rate tripled for each 100 °C increase in temperature. This is consistent with the change in oxidation rates predicted by the parabolic rate equations examined in NUREG/CR-4982. The zirconium combustion literature reviewed for ignition temperature did not discount or provide alternate oxidation rates that should be used in the SFUEL calculations.

As discussed earlier, current operating plants burn fuel to higher levels than used in the evaluations. The BNL and SNL studies in support of GSI 82 represented operating practices of the 1980's with burnup level around 33 GWD/MTU. In NUREG/CR-6451, BNL used burnup values of 40 and 60 GWD/MTU for BWRs and PWRs, respectively. While these values are closer to current operating practices, they still underestimate peak burnup values. Additionally, the decay heat at the same burnup level used in the SHARP analyses is significantly lower than that used in the SFUEL analyses. Given that burnup is an important parameter for determining the critical decay time, this is a significant change. The increase in burnup level will increase the critical decay time needed to ensure that air-cooling is sufficient to maintain the zirconium cladding below the oxidation temperature.

The BNL and SNL studies in support of GSI 82 represented storage practices of the 1980's when plants were starting to convert to high-density storage racks. The studies did not address high density BWR racks, and the high-density PWR racks in the reports were not as dense as the designs used by many plants today. The higher density racking currently used will decrease the airflow available for heat removal. Therefore, lower decay heat values are needed to ensure that air-cooling is sufficient to maintain the zirconium clad below the oxidation temperature.

1.5 Estimated Heatup Time of Uncovered Spent Fuel

The staff recognized that the decay time necessary to ensure that air cooling was adequate to remain below the temperature of self-sustaining zirconium oxidation was a conservative criteria

for the reduction in emergency preparedness criteria. Using the fact that the decay heat of the fuel is reducing with time, credit could be given, if quantified, for the increasing length of time for the accident to progress after all water is lost from the SFP. The staff sought to quantify the decay time since final shutdown such that the heatup time of the fuel after uncovery was adequate for effective protective measures using local emergency response.

The heatup time of the fuel depends on the amount of decay heat in the fuel, and the amount of heat removal available for the fuel. The amount of decay heat is dependent on the burnup. The amount of heat removal is dependent on several variables, as discussed above, that are difficult to represent generically without making a number of assumptions that may be difficult to confirm on a plant and event specific basis.

For the calculations, the staff used a decay heat per assembly and divided it equally among the pins. It assumed a 9X9 assembly for the PWRs and a 17x17 assembly for the BWRs. Decay heats were computed using an extrapolation of the decay power tables in NUREG/CR-5625 [Ref. 8]. The decay heat in NUREG/CR-5625 is based on ORIGEN calculations. The tables for the decay heat extend to burnups of 50 GWD/MTU for PWRs and 45 GWD/MTU for BWRs. The staff recognizes that the decay heat is only valid for values up to the maximum values in the tables, but staff ORIGEN calculations of the decay power, with respect to burnup for values in the table, indicate that extrapolation provides a reasonable and slightly conservative estimate of the decay heat for burnup values beyond the limits of the tables. Current peak bundle average burnups are approximately 50 GWD/MTU for BWRs and 55 GWD/MTU for PWRs. The BWR decay heat was calculated using a specific power of 26.2 MW/MTU. The PWR decay heat was calculated using a specific power of 37.5 MW/MTU. Both the PWR and BWR decay heats were calculated for a burnup of 60 GWD/MTU and include an uncertainty factor of 6 percent.

The staff has also considered a scenario with a rapid partial draindown to a level at or below the top of active fuel with a slow boiloff of water after the draindown. This could occur if a large breech occured in the liner at or below the top of active fuel. Section 5.1 of NUREG/CR-0649 analyzes the partial draindown problem. For the worst case draindown and a lower bound approximation for heat transfer to the water and the building the heatup time slightly less than the heatup time for the corresponding air cooled case. More accurate modeling could extend the heatup time to be comparable to or longer than the air cooled case.

Calculations, assuming an instant draindown of the pool and air-cooling, only show a heatup time to fission product release of 10 to 15 hours at 1 year after shutdown. The worst case partial draindown could release fission products in 5 to 10 hours at 1 year after shutdown.

1.6 Critical Decay Times to Reach Sufficient Air Cooling

Based on the above discussion, the staff concludes the following with respect to critical decay times. Calculations using the SFUEL code in support of GSI-82 have determined a critical specific decay heat of 6 kW/MTU is needed for the onset of runaway zirconium oxidation. The 6 kW/MTU estimate calculated using SFUEL in a high-density storage rack configuration is

reasonable and is based on the best calculations to date. However, this estimate is based on perfect ventilation conditions in the building and lower density rack configurations than exist today.

For high burnup PWR and BWR fuel, the staff estimates it will take approximately 3 years to reach the critical decay heat level cited in NUREG/CR-4982. Better modeling of flow mixing and accounting for the grid spacer and tie plate flow resistance could reduce the critical decay power level and increase the critical decay time beyond 3 years, but this may be counterbalanced by increased radiation heat transfer from realistic fuel bundle loading. Other assumptions, such as imperfect ventilation, could extend the critical decay time for the onset of a zirconium fire by 1 to 2 years. The critical decay heat may actually be as low as 3 kW/MTU when peak to average rod bundle peaking effects and higher density rack configurations are taken into account. Accounting for imperfect ventilation and higher density spent fuel storage in the racks, the staff estimates it will take approximately 4 to 5 years to reach a decay heat of 3 kW/MTU for current plant fuel burnups. Plant-specific calculations using fuel decay heat based on the actual plant operating history and spent fuel configurations could yield significantly shorter critical decay times. Calculations performed using checkerboard fuel loadings indicate that the critical decay time can be reduced by one year or more if the highest power fuel is interspersed with low powered fuel or empty rack spaces.

1.7 Fire Propagation

The staff has not performed a sufficient amount of research to understand and predict the propagation of zirconium fires in a spent fuel pool. Based on the limited amount of work performed to date, the propagation is probably limited to less than 2 full cores at a time of 1 year after shutdown. This estimate is based on lowering the GSI 82 estimate of the 6KW/MTU fire threshold to 3KW/MTU to account for building ventilation effects. The actual propagation will probably be dependent on the actual fuel loading configuration in the spent fuel pool. A long term experimental and analytical research program would be required to reliably predict the propagation of a zirconium fire in a spent fuel pool.

1.8 Staff Guidance On Appropriate Evaluation Models for Spent Fuel Pool Heatup Analysis

Licensees must use an appropriate evaluation model for their spent fuel pool heatup calculations. An evaluation model includes one or more computer programs and other information necessary for application of the calculation framework to a specific transient or accident, such as mathematical models used, assumptions included in the programs, a procedure for treating the program input and output information, specification of those portions of the analysis not included in the computer programs, values of parameters and other information necessary to specify the calculation procedure.

Evaluation models can contain several complex computer programs that use analytical and/or numerical methods to solve mathematical models of the nuclear power plant. The mathematical models used in these calculations must contain adequate approximations for physical phenomena that are important for the analysis being performed. The mathematical models used in nuclear plant analyses are often simplified mathematical approximations and empirical in nature. This

mandates that the models must be validated against more detailed mathematical models and properly scaled experimental data. Extensive documentation of the modeling, verification, validation and use of the computer programs should be maintained to document the adequacy of the computer program. Finally, the code should be developed and maintained under a Quality Assurance program that meets the requirements of 10 CFR Part 50, Appendix B.

The documentation for the analysis should confirm that the combined code and application uncertainty is less than the design margin for the safety parameter of interest in the calculation . Calculation uncertainties are specific to a given licensing calculation. The documentation should describe the methodology used to evaluate the uncertainty in the calculation. The uncertainty evaluation should treat all sources of uncertainty present in the calculations. Sources of code uncertainty include uncertainties in theoretical models or closure relationships determined from comparison to separate effects tests, uncertainties due to scaling of the basic models and closure relationships, and uncertainties due to nodalization and solution techniques. The documentation should show that the major sources of uncertainty are consistent with the phenomena identified as being important. Additional calculation uncertainties exist in application of the code in the calculation due to uncertainties in model input parameters for operating conditions such as accident initial conditions and boundary conditions. In some cases, bounding values may be acceptable for input parameters such as accident initial conditions and boundary conditions.

Spent fuel pool heatup analyses must consider decay heat removal from both the fuel racks and the building. An accurate determination of fuel cladding temperatures in the spent fuel pool requires sophisticated fluid flow and heat transfer analyses. The primary components of a heatup anlaysis are described in the paragraphs that follow.

The spent fuel pool heat source is determined by the decay heat in the spent fuel. The analysis should use methods that are appropriate for the fuel burnup and decay time. The lowest possible decay heat input can only be achieved by accurately tracking the burnup history of individual spent fuel pool bundles. The method for calulating the spent fuel pool decay heat including its uncertainty must be adequately justified.

The fluid conditions immediately above the spent fuel racks are determined by the heat removal from the spent fuel racks to the outside of the building. This is primarily determined by the building ventilation flow rate. Heat transfer through the walls can also be important at low ventilation rates. Heat removal from the top of the fuel racks to the bulk building atmosphere is primarily determined by buoyancy driven flows. Radiation heat transfer can also be significant. Three dimensional computational fluid dynamics calculations are required to predict the flow conditions inside the spent fuel pool building. A steady state solution may not exist for the problem being analyzed. Time dependent variations must be considered in the analysis if time averaging is used in order to use a steady state approximation. Spatial variations must also be considered if spatial averaging is performed to simplify the analysis. The choice of a turbulence model must be justified and its impact on the overall calculation uncertainty must be evaluated.

Heat removal from the spent fuel pool racks is governed by the fluid conditions immediately above the fuel racks and buoyancy driven natural circulation in the racks. The heat removal rates are determined by the balance between buoyancy driving forces and the flow resistance of the downflow area and the fuel racks. Downflow in low powered spent fuel bundles must also be

considered and accounted for. This can be very important in densely packed spent fuel pools with little downcomer area available for downflow. Calculations must use wall friction factors and additive loss coefficients (including those due to orifices and grid spacers) that are appropriate for both the flow regime and the geometry. Flow calculations must be assessed against appropriate experimental data.

Conduction, convection and radiation heat transfer can all be important in spent fuel pool rack heatup calculations. Neglect of any heat transfer mode must be adequately justified. Convective heat transfer coefficients must be appropriate for both the flow regime and the geometry. Heat transfer models must be assessed against appropriate experimental data.

Certain phenomena will occur as peak temperatures increase and must be accounted for in the analysis. Experimental data has shown that clad ballooning will occur if cladding temperatures exceed temperatures of approximately 560 °C for longer than 10 hours. The temperature threshold will be lower for longer thermal loading times. If clad ballooning is expected additional flow losses must be added to account for the reduction in flow area. Many spent fuel pool racks use BORAL plates for criticality control. Aluminum melts at approximately 640 °C. Heat transfer calculations within the rack must be of adequate detail to predict the temperature of any aluminum in the rack. If the temperature of any aluminum in the racks is predicted to exceed its melting temperature the consequences of the melting and relocation must be analyzed. Possible consequences of aluminum melting and relocation include flow blockages and criticality. Zirconium oxidation in air can have a significant effect on heatup calculations at temperatures above 600 °C. Zirconium oxidation must be modeled using and appropriate reaction kinetics model that is supported by experimental data.

The licensee must integrate all pieces of the analysis to determine if runaway zirconium oxidation will occur. The impact of uncertainties on the predicted temperatures must be evaluated and compared to the margin available in the calculation. The propagation of uncertainties through each part of the analysis must be properly treated.

References:

1. Benjamin, et. al., "Spent Fuel Heatup Following Loss of Water During Storage", NUREG/CR-0649, March 1979.
2. Nourbakhsh, et. al., "Analysis of Spent Fuel Heatup Following Loss of Water in a Spent Fuel Pool", NUREG/CR-6441.
3. Smith, C. W., "Calculated Fuel Perforation Temperatures, Commercial Power Reactor Fuels", NEDO-10093, September 1969.
4. Sailor, et. al., "Severe Accidents in Spent Fuel Pools in Support of Generic Safety Issue 82", NUREG/CR-4982.
5. MELCOR 1.8.1Computer Code Manual, Volume 2: Reference Manuals and Programmers' Guides, June 1991.
6. Pisano, et. al., "The Potential for Propagation of a Self-Sustaining Zirconium Oxidation Following Loss of Water in a Spent Fuel Pool", NRC draft report, January 1984.
7. "A Safety and Regulatory Assessment of Generic BWR and PWR Permanently Shutdown Nuclear Power Plants," NUREG/CR-6451, dated August 1997.

8. Hermann, et.al., "Technical Support for a Proposed Decay Heat Guide Using SAS2H/ORIGEN-S Data", NUREG/CR-5625, September 1994.
9. "Compendium of ECCS Research for Realistic LOCA Analysis", NUREG-1230, December 1988.
10. Cooper, T. D., "Review of Zirconium-Zircaloy Pyrophoricity, RHO-RE-ST-31P, Rockwell International, November 1984.
11. Kullen, et. al., " An Assessment of Zirconium Pyrophoricity and Recommendations for Handling Wast Hulls", ANL-77-63, Argonne National Laboratory, November 1977.

Appendix 1 Thermal Hydraulics

1.0 Spent Fuel Heatup Analyses

Spent fuel heatup analyses model the decay power and configuration of the fuel to characterize the thermal hydraulic phenomena that will occur in the SFP and the building following a postulated loss of water accident. This appendix reviews the existing studies on spent fuel heatup and zirconium oxidation, the temperature criteria used in the analyses, and how it applies to decommissioned plants.

1.1 Spent Fuel Failure Criteria

Several different fuel failure criteria have been used in previously NRC-sponsored SFP accident studies. Benjamin, et. al. used the onset of runaway fuel clad oxidation as the fuel failure criterion in NUREG/CR-0649 [Ref. 1]. This criterion was criticized because clad rupture can occur at a relatively low temperature causing a gap release. The consequences of gap release can be significant if the radioactive iodine has not yet decayed to insignificant amounts. SHARP calculations [Ref. 2] used the onset of clad swelling as an acceptance criterion for prevention of fuel failure. The onset of clad swelling leading to gap release occurs at approximately 565 °C, which corresponds to the temperature for 10-hour creep rupture time [Ref. 3]. A cladding temperature of 570 °C is used as a thermal limit under accident conditions for licensing of spent fuel dry storage casks.

The most severe fuel damage would be caused by rapid, runaway zirconium oxidation. This would lead to significant fission product release even after the gap activity has become insignificant. The onset of rapid oxidation may occur as low as 800 °C [Ref. 4]. Runaway oxidation can raise clad and fuel temperatures to approximately 2000 °C which corresponds to the melting temperature of zirconium. The release of fission products trapped in the fuel can occur at fuel temperatures of approximately 1400-1500 °C. Runaway oxidation starting in a high powered channel could also propagate through radiative and convective heat transfer to lower power assemblies because of the large heat of reaction in zirconium oxidation.

There are several other temperature thresholds that may be of concern in SFP accidents. The melting temperature of aluminum, which is a constituent in BORAL poison plates in some types of the spent fuel storage racks, is approximately 640 °C. No evidence was found that boron carbide will dissolve in the aluminum forming a eutectic mixture that liquefies at a temperature below the melting point of aluminum. However, if it is possible for a molten material to leak from the stainless steel spent fuel storage rack case, melting and relocation of the aluminum in the boron carbide-aluminum composite may cause flow blockages that increase hydraulic resistance. No realistic evaluation of melting and relocation of aluminum or aluminum/boron carbide eutectic has been performed.

Another concern is the structural integrity of the fuel racks at high temperatures. Several eutectic mixtures known from reactor severe accident research [Ref. 5] may be important in SFP accidents. As previously stated, the formation of a eutectic mixture allows liquification and loss of structural integrity for a mixture of materials at a lower temperature than the melting point of any of the component materials. Steel and zirconium form an eutectic mixture at

approximately 935 °C. Steel and boron carbide form a eutectic mixture at approximately 1150 °C. The steel racks may also not be able to maintain structural integrity because of the sustained loads at high temperature. Loss of rack integrity may affect the propagation of a zirconium fire.

If the gap radioactivity inventory is significant, then the spent fuel cladding temperature must be kept below 565 °C. If the consequences of aluminum/boron carbide relocation are acceptable, then 800 °C is a reasonable deterministic acceptance temperature if uncertainties are less than the margin to 800 °C and the effects of higher temperatures on the material are modeled. Otherwise the temperature must be lower than the aluminum melting point (640 °C) or the aluminum/boron carbide eutectic melting point.

Based on the large uncertainties in heatup calculations, the low level of sophistication and poor quality of heatup calculations submitted by licensees, and the absence of data for computer code assessment, the staff proposes an acceptance temperature of 600 °C if the radioactive iodine has decayed to the point where the gap activity is a significant contributor to offsite doses.

1.2 Evaluation of Existing Spent Fuel Heatup Analyses

In the 1980's, severe accidents in operating reactor SFPs were evaluated to assess the significance of the results of some laboratory studies on the possibility of self-sustaining zirconium oxidation and fire propagation between assemblies in an air-cooled environment, and also to assess the impact of the increase in the use of high density spent fuel storage racks on severe accidents in spent fuel pools. This issue was identified as Generic Safety Issue (GSI) 82. SNL and Brookhaven National Laboratory (BNL) used the SFUEL and SFUEL1W computer codes to calculate spent fuel heatup in these studies. While decommissioned plants were not addressed in the study, many of the insights gained from these studies are applicable to decommissioned plants.

More recently, BNL developed a new computer code, SHARP, that was intended to provide a simplified analysis method to model plant-specific spent fuel configurations for spent fuel heatup calculations at decommissioned plants. Some of this work was built on the assumption used by SNL and BNL in their studies in support of GSI 82.

1.2.1 SFUEL Series Based Analyses

Extensive work on the phenomena of zirconium oxidation in air for a SFP configuration was performed by SNL and BNL in support of GSI 82. SNL investigated the heatup of spent fuel, the potential for self-sustaining zirconium oxidation, and the propagation to adjacent assemblies [Ref. 1, 6]. SNL used SFUEL and SFUEL1W computer codes to analyze the thermal-hydraulic phenomena, assuming complete drainage of the SFP water. In NUREG/CR-4982 [Ref. 4], BNL extended the SNL studies on the phenomenology of zirconium-air oxidation and its propagation in spent fuel assemblies. The SFUEL series of codes include all modes of heat transfer, including radiation. However, radiation heat transfer may have been underestimated due to the assumed fuel bundle arrangement.

In NUREG/CR-0649, SNL concluded that decay heat and configuration are important parameters. SNL found that key configuration variables are the baseplate hole size, downcomer width, and the availability of open spaces for air flow. They also found that building ventilation is an important configuration variable.

The draft SNL report investigated the potential for oxidation propagation to adjacent assemblies. If decay heat is sufficient to raise the clad temperature to within approximately one hundred degrees of oxidation, then the radiative heat from an adjacent assembly that did oxidize could raise its temperature to the oxidation level. The report also discusses small-scale experiments involving clad temperatures greater than 1000 °C. SNL hypothesized that molten zirconium material would slump or relocation towards the bottom of the racks and consequently would not be involved in the oxidation reaction. NUREG/CR-4982 did not allow oxidation to occur at temperatures higher than 2100 °C to account for the zirconium melting and relocation. Otherwise, temperatures reached as high as 3500 °C. It was felt that not cutting off the oxidation overstated the propagation of a zirconium fire because of the fourth power temperature dependence of the radiation heat flux. The SFUEL series of codes did not model melting and relocation of materials.

In NUREG/CR-4982, BNL reviewed the SFUEL code and compared it to the SNL small-scale experiments and concluded that SFUEL was a valuable tool for assessing the likelihood of self-sustaining clad oxidation for a variety of spent fuel configurations in a drained pool. SNL reported the following critical decay times in NUREG/CR-0649 based on having no runaway oxidation. Critical decay time is defined as the length of time after shutdown when the most recently discharged fuel temperature will not exceed the chosen fuel failure criteria when cooled by air only.

700 days PWR, 6 kW/MTU decay power per assembly, high density rack, 10.25" pitch, 5" orifice, 1 inch from storage wall

280 days PWR, same as above but for 1 foot from storage wall

180 days BWR, 14 kW/MTU decay power per assembly, cylindrical baskets, 8.5" pitch, 1.5" orifice

unknown BWR, high density rack, SFUEL1W code was limited to computation of BWR low density racks.

High density racks with a 5-inch orifice are the most representative of current storage practices. A critical decay time for high density BWR racks was not provided due to code limitations. Low density and cylindrical storage rack configurations are no longer representative of spent fuel storage. All currently operating and recently shutdown plants have some high density racks in the pool. For an assembly in a high density PWR rack with an 5-inch orifice, a decay power below 6 kW/MTU did not result in zirconium oxidation. All of these estimates were based on perfect ventilation (i.e., unlimited, ambient-temperature air) and burnup rates of 33 GWD/MTU. Currently, some PWRs are permitted to burn up to 62 GWD/MTU and some BWRs to 60 GWD/MTU. For fuel burnup of 60 GWD/MTU, the staff estimates the decay time for a bundle to reach 6 kW/MTU will increase from 2 years to approximately 3 years. Therefore, the

staff expects the difference between critical decay times for PWRs and BWRs to decrease and that the BWR critical decay time for current burnups and rack designs would now be longer than the SNL estimate for high density PWR racks. The SNL calculations also do not appear to have included grid spacer loss coefficients which can have a significant effect since the resistance of the grid spacers is greater than the resistance of a 5 inch orifice. There is no mixing between the rising air leaving the fuel racks and the relatively cooler air moving down into the pool. Including the grid spacer resistance, accounting for mixing and limiting the building ventilation flow to rated conditions will result in the critical decay power to be less than 6 kW/MTU. The SNL calculations may have understated the effective radiation heat transfer heat sink due to the assumed fuel geometry in the calculations. A more realistic fuel configuration pattern in the SFP would give a better estimate of the radiation heat sink and raise the critical decay power needed for significant oxidation.

While the studies in support of GSI 82 provided useful insights to air-cooled spent fuel assemblies, it is the opinion of the staff that they do not provide an adequate basis for exemptions. The studies were not meant to establish exemption criteria and lack sufficient information for all the parameters that could affect the decay time. Additionally, the reports are based on burnup values at that time. Since burnup values have increased, the results may not be directly applicable to today's spent fuel.

The general conclusions and the phenomena described in the studies assist in assessing issues for decommissioned plants. However, the calculated decay time values do not represent current plant operational and storage practices.

1.2.2 SHARP Based Analyses

In NUREG/CR-6451 [Ref. 7], BNL investigated spent fuel heatup that could lead to a zirconium fire at permanently shutdown plants. BNL developed a new computer code, SHARP (Spent Fuel Heatup Analytical Response Program), to calculate critical decay times to preclude zirconium oxidation for spent fuel. The code was intended to study thermal hydraulic characteristics and to calculate spent fuel heatup up to temperatures of approximately 600 °C. SHARP is limited to low temperatures since it lacks models for radiation heat transfer, zirconium oxidation, and materials melting and relocating. SHARP also lacks modeling for grid spacer losses and neglects mixing between the rising hot air and the falling cooler air in the SFP. BNL reported the following generic critical decay times using the SHARP code.

17 months for a PWR, high density rack, 60 GWD/MTU burnup; 10.4" pitch; 5" orifice
7 months for a BWR, high density rack, 40 GWD/MTU burnup; 6.25" pitch; 4" orifice

The above decay times are based on a maximum cladding temperature of 565 °C. The parameters listed with the critical decay times are generally representative of operating practices. Current fuel burnups in some plants, however, have increased to values higher than those used by BNL and perfect ventilation was assumed, which could lead to an underestimation of the critical decay times.

The SHARP code was not significantly benchmarked, validated or verified. The critical decay times above are shorter than those calculated in NUREG/CR-0649 and NUREG/CR-4982,

particularly when the lower cladding temperature used for fuel failure and the higher decay heats used in the earlier analyses are taken into account. This appears to be driven in part by the fact that the decay heat at a given burnup in the SHARP calculations is significantly lower than what is used in the SFUEL calculations. The staff has identified several areas that require code modifications, which will increase the calculated critical decay times. The staff has determined that the code will used as a scoping tool by the staff. It is not adequate for use as technical bases by licensees without further code modifications and verification. NUREG/CR-6541 was intended as an assessment to steer rulemaking activities. The report was neither intended nor was it structured to provide a basis for exemptions. The staff does not rely on this study for heatup analysis information due to the code that the decay time conclusions were based on.

1.3 Heatup Calculation Uncertainties and Sensitivities

The phenomenology needed to model spent fuel heatup is dependent on the chosen cladding temperature success criteria and the assumed accident scenario. Many assumptions and modeling deficiencies exist in the current calculations. The staff reviewed the models to assess the impact of those modeling assumptions. Some of these uncertainties for the SFUEL series codes are further discussed in NUREG/CR-4982. For cases of flow mixing, decay heat, bundle flow resistance and other severe accident phenomena, additional information is provided here.

Calculations performed to date assume that the building, fuel, and rack geometry remain intact. This would not be a valid assumption if a seismic event or a cask drop damaged some of the fuel racks or the building. Rack integrity may not be a good assumption after the onset of significant zirconium oxidation due to fuel failure criteria issues discussed in Section 2.2.1. The building may also be hot enough to ignite other materials. Assuming that the racks remain intact is the most optimistic assumption that can be made about the rack geometry. Any damage to the racks or the building could significantly reduce the coolability of the fuel.

Previous SFUEL, SFUEL1W, and SHARP calculations used in the resolution of GSI 82 and decommissioning studies used a perfect ventilation assumption. With the perfect ventilation assumption an unlimited amount of fresh, ambient-temperature air is available. This assumption would be valid if the building failed early in the event or if large portions of the walls and ceilings were open. If the building does not fail, the spent fuel building ventilation flow rate would dictate the air flow available. Mixing between the rising hot air and the descending cooler air in the spent fuel pool is not modeled in the codes.

The spent fuel building ventilation flow rate is important in determining the overall building energy balance. Air flow through the building is an important heat removal mechanism. Most of the air would recirculate in the building and the air drawn under the racks would be higher than ambient temperature and, therefore, less heat removal would occur. Airflow also provides a source of oxygen for zirconium oxidation. Sensitivity studies have shown that heatup rates increase with decreasing ventilation flow, but that very low ventilation rates limit the rate of oxidation. Other oxidation reactions (fires) that occur in the building will also deplete available oxygen in the building. Zirconium-Nitrogen reaction modeling is not included in the SFUEL code and may had an impact on zero and low ventilation cases. GSI 82 studies concluded that the perfect ventilation assumption was more conservative than no ventilation because the

oxidation reaction became oxygen starved with no ventilation. These studies did not consider the failure modes of the building under high temperature scenarios. Intermediate ventilation rate results were not studied and give longer critical decay times than the perfect ventilation case.

A key fuel heat removal mechanism is buoyancy-driven natural circulation. The calculated air flow and peak temperatures are very sensitive to flow resistances in the storage racks, fuel bundles and downcomer. The downcomer flow resistance is determined by the spacing between the fuel racks and the wall of the SFP. The storage rack resistance is determined by the orifice size at the bottom entrance to the fuel bundle. Smaller inlet orifices have higher flow resistance. As shown by SFUEL and SHARP calculations, changes in the rack-wall spacing and the orifice size over the range of designs can shift critical decay times by more than a year. The fuel bundle flow resistance is determined by the rod spacing, the grid spacers, intermediate flow mixers and the upper and lower tie plates. SFUEL and SHARP calculations have neglected the losses from the grid spacers, intermediate flow mixers and the tie plates. These flow resistances will be higher than those from the rack inlet orifice in some cases. Therefore inclusion of this additional flow resistance may significantly extend the critical decay time for some cases. NUREG/CR-4982 concluded that the largest source of uncertainty was due to the natural circulation flow rates.

The downcomer and bundle inlet air temperatures and mass flow rates are important in determining the peak cladding temperature. The extent of flow mixing will determine the air temperatures at the downcomer and bundle inlet. The SFUEL and SHARP calculations assume a well mixed building air space. The downcomer inlet temperature is set equal to the building temperature. This assumption neglects the mixing that occurs between the hot air rising from the bundles and the cooler air descending down the SFP wall. Computational fluid dynamics calculations performed by the NRC Office of Research (RES) using the FLUENT code and Pacific Northwest National Laboratory using the TEMPEST code indicate that the well mixed building is not a good assumption. The mixing that occurs between the cool air flowing down into the pool and the hot air flowing up out of the fuel bundles can significantly increase peak cladding temperatures. Even using different turbulent mixing models can affect the peak temperatures by approximately 100 °C. The calculations indicate that fully 3-dimensional calculations may be needed to accurately predict the mixing because unrealistic flow topologies in 2-dimensional approximations may overstate the mixing. The calculations also indicate that the quasi-steady state assumptions for conditions above the fuel rack may not be appropriate. Time varying temperature fluctuations on the order of 100 °C have been observed in 3D calculations.

Radiation heat transfer is important in zirconium oxidation calculations. Radiation heat transfer can affect both the onset of a zirconium fire and the propagation of a fire. Both the SFP loading pattern and the geometry of the fuel racks can affect the radiation heat transfer between adjacent bundles. Simple gray body calculations show that at clad temperatures of 800 °C, a temperature difference of 100 °C between adjacent bundles would cause the radiation heat flux to exceed the critical decay power of 6 kW/MTU. Therefore, the temperature difference that could be maintained between adjacent bundles is highly constrained by the low decay heat levels. SFUEL calculations performed by SNL and BNL included radiation heat transfer, but the radiation heat transfer was underpredicted since the spent fuel placement is two-dimensional

and the hottest elements are in the middle of the pool with cooler elements placed progressively toward the pool walls. Heat transfer between hotter and cooler assemblies has the potential to be significantly higher if the fuel bundles were intermixed in a realistic loading pattern.

At temperatures below 800 °C the SFP heat source is dominated by the spent fuel decay heat. SNL and BNL found that, for high density PWR racks, that 6 kW/MTU was the critical decay heat level for a zirconium fire to occur in configurations resembling current fuel storage practices. At the fuel burnups used in the calculations, this critical decay heat level was reached after two years. Decay heat calculations in NUREG/CR-5625 [Ref. 8] were performed to be the basis for calculating fuel assembly decay heat inputs for dry cask storage analyses. These decay heat calculations are consistent with the decay heat used in SFUEL calculations. Extrapolation of the decay heat calculations from NUREG/CR-5625 to current burnups indicate that approximately 3 years will be needed to reach a decay heat of 6 kW/MTU. The extrapolation has been confirmed to provide a reasonable decay heat approximation by performing ORIGEN calculations that extend to higher burnup. The critical decay heat may actually be as low as 3kW/MTU when in-bundle peaking effects, higher density rack configurations and rated build ventilation flows are taken into account.

Several licensees have proposed using the current Standard Review Plan (NUREG-0800) Branch Technical Position ASB 9-2 decay heat model for SFP heatup calculations. Using ASB 9-2 decay heat with a "k factor" of 0.1 produces non-conservative decay heat values in the range of 1 to 4 years after shutdown. ASB 9-2 explicitly states that it is good for times less than 10,000,000 seconds (~ 116 days). The basis of ASB 9-2 is the 1971 ANS draft decay heat standard. The standard gives "k factors" to use beyond 10,000,000 seconds. The staff has found that a "k factor of 0.2" will produce conservative decay heat values compared to ORIGEN calculations for the range of 1 to 4 years after shutdown.

At temperatures below the onset of self-sustaining oxidation, the heat source is dominated by the decay heat of the fuel. When zirconium reaches temperatures where air oxidation is significant, the heat source is dominated by oxidation. The energy of the reaction is 262 kcal per mole of zirconium. In air, the oxidation rate and the energy of the reaction is higher than zirconium-steam oxidation. Much less data exists for zirconium-air oxidation than for zirconium-steam oxidation. A large amount of data exists for zirconium-steam oxidation because of the large amount of research performed under the ECCS research program [Ref. 9]. If all of the zirconium in a full 17x17 PWR fuel bundle fully oxidizes in air over the period of an hour, the average power from the oxidation is 0.3 MW. The critical decay heat as determined with SFUEL is approximately 2.7 kW for the bundle. The oxidation power source would amount to approximately 60 MW if the whole core was burning. A 20,000 cubic feet per minute (CFM) air flow rate is needed to support that reaction rate based on 100-percent oxygen utilization. The SFUEL oxidation rate was modeled using several parabolic rate equations based on available data. SFUEL had limited verification against SNL experiments that studied the potential of zirconium fire propagation. BNL determined that although they could not find a basis for rejecting the oxidation rate model used in SFUEL, uncertainties in oxidation of zirconium in air could change the critical decay heat by up to 25-percent. It was found that the onset of runaway zirconium oxidation could occur at temperatures as low as 800 °C. Different alloys of zirconium had oxidation rates that vary by as much as a factor of four. Apparently it was found that oxidation in air was worse than oxidation in pure oxygen. This suggests that the nitrogen

concentration can have a significant impact on the oxidation rate. Since the relative concentration of oxygen and nitrogen varies as oxygen is consumed this causes additional uncertainty in the oxidation rate. The oxidation was cut off at 2100 °C in the BNL calculations in support of GSI 82. This was done to simulate zirconium clad relocation when the melting point of zirconium was reached. If the oxidation was not cut off temperatures could be as high as 3500 °C. It was felt the propagation to adjacent bundles was overpredicted if no cutoff temperature is used due to the fourth power dependence of temperature on the radiation heat fluxes.

The combustion literature cited in the June 1999 draft report shows that there is a large range in the temperature for zirconium ignition in air. Evidence cited from the literature states that bulk zirconium can not ignite at temperatures lower than 1300-1600 °C. It is known from the extensive emergency core cooling system (ECCS) and severe accident research programs that zirconium-steam runaway oxidation occurs at temperatures below 1300 °C. Since oxidation in air occurs more rapidly than oxidation in steam, temperatures in this range are not credible for the onset of runaway oxidation in air. Correlations listed [Ref. 10] give ignition temperatures for small zirconium samples in the range of runaway oxidation computed by the SFUEL series codes when the geometry factors calculated from zirconium cladding are input into the correlations. Only one reference [Ref. 11] appears to be applicable to zirconium oxidation in sustained heating of fuel rods. In the referenced test, sections of zirconium tubing were oxidized at temperatures of 700 °C, 800 °C and 900 °C for 1 hour. The average oxidation rate tripled for each 100 °C increase in temperature. This is consistent with the change in oxidation rates predicted by the parabolic rate equations examined in NUREG/CR-4982. The zirconium combustion literature reviewed for ignition temperature did not discount or provide alternate oxidation rates that should be used in the SFUEL calculations.

As discussed earlier, current operating plants burn fuel to higher levels than used in the evaluations. The BNL and SNL studies in support of GSI 82 represented operating practices of the 1980's with burnup level around 33 GWD/MTU. In NUREG/CR-6451, BNL used burnup values of 40 and 60 GWD/MTU for BWRs and PWRs, respectively. While these values are closer to current operating practices, they still underestimate peak burnup values. Additionally, the decay heat at the same burnup level used in the SHARP analyses is significantly lower than that used in the SFUEL analyses. Given that burnup is an important parameter for determining the critical decay time, this is a significant change. The increase in burnup level will increase the critical decay time needed to ensure that air cooling is sufficient to maintain the zirconium cladding below the oxidation temperature.

The BNL and SNL studies in support of GSI 82 represented storage practices of the 1980's when plants were starting to convert to high density storage racks. The studies did not address high density BWR racks, and the high density PWR racks in the reports were not as dense as the designs used by many plants today. The higher density racking currently used will decrease the air flow available for heat removal. Therefore, lower decay heat values are needed to ensure that air cooling is sufficient to maintain the zirconium clad below the oxidation temperature.

1.4 Estimated Heatup Time of Uncovered Spent Fuel

The staff recognized that the decay time necessary to ensure that air cooling was adequate to remain below the temperature of self-sustaining zirconium oxidation was a conservative criteria for the reduction in emergency preparedness criteria. Using the fact that the decay heat of the fuel is reducing with time, credit could be given, if quantified, for the increasing length of time for the accident to progress after all water is lost from the SFP. The staff sought to quantify the decay time since final shutdown such that the heatup time of the fuel after uncovery was adequate for effective protective measures using local emergency response.

The heatup time of the fuel depends on the amount of decay heat in the fuel and the amount of heat removal available for the fuel. The amount of decay heat is dependent on the burnup. The amount of heat removal is dependent on several variables as discussed above that are difficult to represent generically without making a number of assumptions that may be difficult to confirm on an plant and event specific basis.

For the calculations, the staff used a decay heat per assembly and divided it equally among the pins. It assumed a 9X9 assembly for the PWRs and a 17x17 assembly for the BWRs. All design values are in Appendix 11. Decay heats were computed using an extrapolation of the decay power tables in NUREG/CR-5625 [Ref. 8]. The decay heat in NUREG/CR-5625 is based on ORIGEN calculations. The tables for the decay heat extend to burnups of 50 GWD/MTU for PWRs and 45 GWD/MTU for BWRs. The staff recognizes that the decay heat is only valid for values up to the maximum values in the tables, but staff ORIGEN calculations of the decay power with respect to burnup for values in the table indicate that extrapolation provides a reasonable and slightly conservative estimate of the decay heat for burnup values beyond the limits of the tables. The BWR decay heat was calculated using a specific power of 26.2 MW/MTU. The PWR decay heat was calculated using a specific power of 37.5 MW/MTU. Both the PWR and BWR decay heats were calculated for a burnup of 60 GWD/MTU and include an uncertainty factor of 6 percent.

The staff has also considered a scenario with a rapid partial draindown to a level at or below the top of active fuel with a slow boiloff of water after the draindown. This could occur if a large breech occured in the liner at or below the top of active fuel. Section 5.1 of NUREG/CR-0649 analyzes the partial draindown problem. For the worst case draindown and a lower bound approximation for heat transfer to the water and the building the heatup time slightly less than the heatup time for the corresponding air cooled case. More accurate modeling could extend the heatup time to be comparable to or longer than the air cooled case.

Calculations assuming an instant draindown of the pool and air cooling only show a heatup time to fission product release of 10 to 15 hours at 1 year after shutdown. The worst case partial draindown could release fission products in 5 to 10 hours at 1 year after shutdown.

1.5 Critical Decay Times to Reach Sufficient Air Cooling

Based on the above discussion the staff concludes the following with respect to critical decay times. Calculations using the SFUEL code in support of GSI-82 have determined a critical specific decay heat of 6 kW/MTU is needed for the onset of runaway zirconium oxidation. The 6 kW/MTU estimate calculated using SFUEL in a high density storage rack configuration is reasonable and is based on the best calculations to date. However, this estimate is based on

perfect ventilation conditions in the building and lower density rack configurations than exist today.

For high burnup PWR and BWR fuel, the staff estimates it will take approximately 3 years to reach the critical decay heat level cited in NUREG/CR-4982. Better modeling of flow mixing and accounting for the grid spacer and tie plate flow resistance could reduce the critical decay power level and increase the critical decay time beyond 3 years, but this may be counterbalance by increased radiation heat transfer from realistic fuel bundle loading. Other assumptions such as imperfect ventilation could extend the critical decay time for the onset of a zirconium fire by 1 to 2 years. The critical decay heat may actually be as low as 3kW/MTU when in bundle peaking effects and higher density rack configurations are taken into account. Accounting for imperfect ventilation and higher density spent fuel storage in the racks, the staff estimates it will take approximately 4 to 5 years to reach a decay heat of 3kW/MTU for current plant fuel burnups. Plant-specific calculations using fuel decay heat based on the actual plant operating history and spent fuel configurations could yield significantly shorter critical decay times. Calculations performed using checkerboard fuel loadings indicate that the critical decay time can be reduced by one year or more if the highest power fuel is interspersed with low powered fuel or empty rack spaces.

1.6 Fire Propagation

The staff has not performed a sufficient amount of research to understand and predict the propagation of zirconium fires in a spent fuel pool. Based on the limited amount of work performed to date the propagation is probably limited to less than 2 full cores at a time of 1 year after shutdown.

References:

1. Benjamin, et. al., "Spent Fuel Heatup Following Loss of Water During Storage", NUREG/CR-0649, March 1979.
2. Nourbakhsh, et. al., "Analysis of Spent Fuel Heatup Following Loss of Water in a Spent Fuel Pool", NUREG/CR-6441.
3. Smith, C. W., "Calculated Fuel Perforation Temperatures, Commercial Power Reactor Fuels", NEDO-10093, September 1969.
4. Sailor, et. al., "Severe Accidents in Spent Fuel Pools in Support of Generic Safety Issue 82", NUREG/CR-4982.
5. MELCOR 1.8.1Computer Code Manual, Volume 2: Reference Manuals and Programmers' Guides, June 1991.
6. Pisano, et. al., "The Potential for Propagation of a Self-Sustaining Zirconium Oxidation Following Loss of Water in a Spent Fuel Pool", NRC draft report, January 1984.
7. "A Safety and Regulatory Assessment of Generic BWR and PWR Permanently Shutdown Nuclear Power Plants," NUREG/CR-6451, dated August 1997.
8. Hermann, et.al., "Technical Support for a Proposed Decay Heat Guide Using SAS2H/ORIGEN-S Data", NUREG/CR-5625, September 1994.
9. "Compendium of ECCS Research for Realistic LOCA Analysis", NUREG-1230, December 1988.

10. Cooper, T. D., "Review of Zirconium-Zircaloy Pyrophoricity, RHO-RE-ST-31P, Rockwell International, November 1984.

11. Kullen, et. al., " An Assessment of Zirconium Pyrophoricity and Recommendations for Handling Wast Hulls", ANL-77-63, Argonne National Laboratory, November 1977.