Entergy

Entergy Operations, Inc.
1340 Echelon Parkway
Jackson, MS 39213-8298
Tel 601 368 5758

Michael A. Krupa
Director
Nuclear Safety & Licensing

August 23, 2001

U.S. Nuclear Regulatory Commission
Attention: Document Control Desk
Washington, D.C. 20555

Subject: River Bend Station
Docket No. 50-458
License No. NPF-47
Response to NRC Request for Additional Information Regarding Cycle 11 Reload Proposed Amendment to the Operating License, LAR 2000-28

Reference:

1. Letter: RBF1-01-0111, from R. K. Edington to US NRC, dated May 23, 2001, "Cycle 11 Reload Proposed Amendment to the Operating License, LAR 2000-28"

2. Letter: CNRO-2001-00032, from M. A. Krupa to US NRC, dated July 23, 2001, "Transmittal of Non-Proprietary version of Attachment 4 of Cycle 11 Reload License Amendment (LAR 2000-28)

RBF1-01-0186
CNRO-2001-00040

Gentlemen:

Please find attached Entergy Operations, Inc. (EOI) response to the NRC Request for Additional Information (RAI) regarding proposed changes to the River Bend Station (RBS) Technical Specifications (TS) needed to support the upcoming Cycle 11 operation. The request for information was discussed in a teleconference and subsequently provided by electronic mail. The questions have been repeated in the attached responses.

Based on the guidelines in 10CFR50.92, Entergy Operations, Inc. has determined that the conclusions of the Significant Hazards Considerations for this response remain unchanged and the additional information involves no new significant hazards considerations.

The responses to this RAI introduce no new commitments.

A001

Attachment 1 contains the response to the RAI. The response contains information that has been determined to be proprietary. Attachment 2 is a non-proprietary version of Attachment 1. Presentations were made by Framatome-ANP, Richland to the NRC reviewer during the review process. Attachment 3 contains the proprietary version of the presentation slides. Attachment 4 contains a non-proprietary version of the information contained in Attachment 3. Attachment 5 contains the affidavits for the proprietary information in Attachments 1 and 3. Proprietary information is delineated with brackets.

The information in Attachment 1 is proprietary to Entergy Operations. The return address for response to Entergy Operations' affidavit is 1340 Echelon Parkway, Jackson, MS 39213. The information in Attachment 3 is proprietary to Framatome-ANP. The return address for response to Framatome-ANP's affidavit is 2101 Horn Rapids Road, Richland, WA, 99352.

Entergy Operations requests the NRC approval and issuance of the proposed Technical Specifications changes prior to the River Bend Refueling Outage 10 now scheduled to begin in September 2001. Entergy Operations requests that the amendment go into effect after Operating Cycle 10, but prior to reactor steam dome pressure reaching 785 psig or core flow reaching 10% rated core flow in Cycle 11. Although this request in neither exigent nor emergency, your prompt review is requested.

I declare under penalty of perjury that the foregoing is true and correct.

Executed on August 23, 2001.

Very truly yours,

M. A Krupa

MAK/ABS/baa

attachment:
1. Response to Request for Additional Information (Proprietary)
2. Response to Request for Additional Information (Non-Proprietary)
3. Supplemental information for RAI (Proprietary)
4. Supplemental information for RAI (Non-Proprietary)
5. Affidavit Concerning Proprietary Information

cc: (See Next Page)

cc:

Mr. Ellis W. Merschoff
Regional Administrator
U. S. Nuclear Regulatory Commission
Region IV
611 Ryan Plaza Drive, Suite 400
Arlington, TX 76011-8064

Mr. R. E. Moody, NRR DLPM/PD IV-1 (w/a)
ATTN: ADDRESSEE ONLY
U. S. Nuclear Regulatory Commission
One Flint North, Mail Stop 07-D1
11555 Rockville Pike
Rockville, MD 20852-2378

NRC Senior Resident Inspector (w/o)
P. O. Box 1050
St. Francisville, LA 70775

Prosanta Chowdhury (w/o)
Louisiana Department of Environmental Quality
Office of Environmental Compliance
Surveillance Division
P.O. Box 82215
Baton Rouge, LA 70884-2215

ATTACHMENT 5

TO

LETTER NO. CNRO-2001-00040

Affidavits Concerning Proprietary Information

EOI Affidavit
Request for Withholding Per 10CFR2.790(b)

Affidavit

I, Michael A. Krupa, state that I am Director of Nuclear Safety & Licensing of Entergy Operations, Inc. (EOI); and that I depose and state the following:

1. I am designated by EOI to review the confidential commercial information referenced herein which is sought to be withheld and authorized to apply for the withholding of the information on behalf of Entergy Operations, Inc. I am submitting this affidavit in conformance with the provisions of 10 CFR 2.790 (b)(1) and in conjunction with the application of EOI for withholding this information.

2. EOI seeks to withhold from public disclosure portions of its response to questions 1 and 4 in Attachment 1 of the document CNRO-2001-00040, Response to NRC Request for Additional Information Regarding Cycle 11 Reload Proposed Amendment to the Operating License, LAR 2000-28, August 23, 2001. This information in the submittal has been marked as confidential.

3. EOI has a rational basis for determining the type of information customarily held in confidence by it and reviews documents or reports which might contain confidential information to determine whether the subject documents should be accorded confidential treatment. This review concluded that the indicated portions of the subject document referenced herein do contain confidential commercial information which justifies them being withheld from public disclosure.

4. This information is of the type customarily held in confidence by EOI and its fuel suppliers and, other than the Commission, is intended to be held in confidence and not disclosed to the public. The information is classified as confidential because it contains information on test data and analytical methods applied to River Bend Station's Cycle 11 core design which contains both ATRIUM-10 and GE11 fuel. Although EOI is the owner of the information, the information was developed by using data and analytical methods which General Electric and Framatome-ANP, Richland (FRA-ANP) individually designate as proprietary. Entergy Operations is under contractual obligation to General Electric and FRA-ANP to treat this information as proprietary.

5. The research, development, engineering and NRC review costs comprise an investment of time and costs to GE, FRA-ANP, and EOI. Disclosure of this information to a competitor would permit the competitor to improve its competitive position by giving valuable insights into BWR fuel design and licensing methodology. In addition, disclosure would harm EOI's contractual obligations related to this information.

6. The information sought to be withheld has been and continues to be held in confidence by EOI and its contractors.

7. The information, to the best of my knowledge and belief, is not available in public sources, and any disclosure to third parties has and will be made only according to requirements of proprietary agreements which provide for the maintenance of this information.

THAT the statements made herein above are, to the best of my knowledge, information and belief, truthful and complete.

M. A. Krupa

M. A. Krupa

STATE OF MISSISSIPPI
COUNTY OF Hinds

SUSCRIBED AND SWORN TO before me, a Notary Public, in and for the county and state above named, this 23th day of August, 2001.

Clara Renee Middleton

Notary Public

My commission expires: Notary Public State of Mississippi At Large
My Commission Expires: November 2, 2001
Bonded Thru Heiden, Brooks & Garland, Inc.

AFFIDAVIT

STATE OF WASHINGTON)
) ss.
COUNTY OF BENTON)

1. My name is Jerald S. Holm. I am Manager, Product Licensing, for Framatome ANP ("FRA-ANP"), and as such I am authorized to execute this Affidavit.

2. I am familiar with the criteria applied by FRA-ANP to determine whether certain FRA-ANP information is proprietary. I am familiar with the policies established by FRA-ANP to ensure the proper application of these criteria.

3. I am familiar with the FRA-ANP information contained in the viewgraphs titled, "MCPR Safety Limit Methodology," presented by R. B. Macduff dated August 2001 and in the viewgraphs titled, "GE-11 Hydraulic Testing," presented by T. H. Keheley dated August 2001, transmitted with letter KVW:01:208 dated August 13, 2001, and referred to herein as "Document." Information contained in this Document has been classified by FRA-ANP as proprietary in accordance with the policies established by FRA-ANP for the control and protection of proprietary and confidential information.

4. This Document contains information of a proprietary and confidential nature and is of the type customarily held in confidence by FRA-ANP and not made available to the public. Based on my experience, I am aware that other companies regard information of the kind contained in this Document as proprietary and confidential.

5. This Document has been made available to the U.S. Nuclear Regulatory Commission in confidence with the request that the information contained in the Document be withheld from public disclosure.

6. The following criteria are customarily applied by FRA-ANP to determine whether information should be classified as proprietary:

(a) The information reveals details of FRA-ANP's research and development plans and programs or their results.

(b) Use of the information by a competitor would permit the competitor to significantly reduce its expenditures, in time or resources, to design, produce, or market a similar product or service.

(c) The information includes test data or analytical techniques concerning a process, methodology, or component, the application of which results in a competitive advantage for FRA-ANP.

(d) The information reveals certain distinguishing aspects of a process, methodology, or component, the exclusive use of which provides a competitive advantage for FRA-ANP in product optimization or marketability.

(e) The information is vital to a competitive advantage held by FRA-ANP, would be helpful to competitors to FRA-ANP, and would likely cause substantial harm to the competitive position of FRA-ANP.

7. In accordance with FRA-ANP's policies governing the protection and control of information, proprietary information contained in this Document has been made available, on a limited basis, to others outside FRA-ANP only as required and under suitable agreement providing for nondisclosure and limited use of the information.

8. FRA-ANP policy requires that proprietary information be kept in a secured file or area and distributed on a need-to-know basis.

9. The foregoing statements are true and correct to the best of my knowledge, information, and belief.

SUBSCRIBED before me this 13th day of August, 2001.

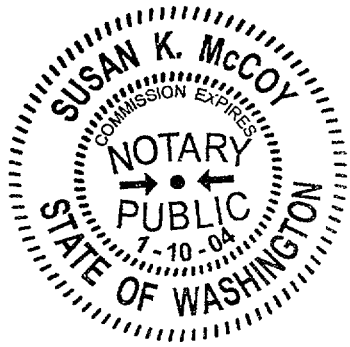

Susan K. McCoy
NOTARY PUBLIC, STATE OF WASHINGTON
MY COMMISSION EXPIRES: 1/10/04

ATTACHMENT 2

TO

LETTER NO. CNRO-2001-00040

Response to Request for Additional Information

(Non-Proprietary Version)

Question 1

GE11 fuel is dominant in River Bend Station Unit 1 Cycle 11 mixed core in which there are 200 fresh ATRIUM-10 fuel bundles and 424 once and twice burned GE11 fuel bundles. It appears that two recirculation loop operation for Cycle 11 has less SLMCPR value than that in Cycle 10 operation by at least 0.04 and by 0.03 for single loop operation. Please describe the calculation details that contribute to this large deduction of the SLMCPR value for both two recirculation loop operation and single loop operation. Provide the methodology and describe the data deduction to support information used in references A.1, A.4, and A.7 of the Attachment 4.

Response

The River Bend Station (RBS) Cycle 11 core contains significantly more GE-11 bundles than Atrium-10 bundles. [ ] This demonstrates that the fuel type makeup of the Cycle 11 core is not a primary factor in the safety limit change.

The difference between the Cycle 11 FRA-ANP determined safety limit and the GE determined Cycle 10 value is primarily due to differences [ ]

In order to evaluate the effects of these differences, Entergy requested that FRA-ANP analyze the Cycle 10 power uprated core [ ] This was accomplished in a manner so as not to compromise GE proprietary information. [ ] The results are summarized in Table 1 below. [ ]

Table 1: Relative Impact of Methodology Differences

	Change in Safety Limit
[ ]	[ ]
[ ]	[ ]
[ ]	[ ]

Reference A.1 is the transmittal of the core design report for River Bend Station (RBS) Cycle 11. The core design was performed by Framatome-ANP (FRA-ANP) using their approved methodologies for this function. Portions of the core design were used for input the Safety Limit MCPR calculation. This included the neutronic description of the fresh fuel and a reference core loading pattern.

Reference A.4 was a letter transmitting information to be used for the modeling of the co-resident GE11 fuel to Siemens Power Corporation. The methodology and the data reduction were in accordance with the NRC approved methodology given in EMF-2245(P)(A), "Application of Siemens Power Corporation's Critical Power Correlations to Co-Resident Fuel." Entergy personnel were trained on these methods as part of the technology transfer.

As indicated in the original submittal, Reference A.7 of Attachment 4 provided the RBS plant specific inputs to the Safety Limit calculation. The generic BWR parameters are identical to those previously approved for General Electric's SL MCPR calculations in NEDC-32601. The reactor system uncertainties are identical to those applied in the Cycle 10 SL MCPR calculations and have been confirmed to be applicable to RBS Cycle 11. These parameters were reviewed for accuracy and transmitted to the fuel vendor via Entergy procedures for review and transmittal of safety related parameters.

A presentation was made to the NRC Staff reviewer at Framatome ANP on August 1-2, 2001 that provided further background on this subject. A proprietary version of the presentation is included in Attachment 3 of this transmittal. A non-proprietary version of the presentation in included as part of Attachment 4 of this letter.

Question 2

Provide the documentation and the description of the tests performed for the thermal-hydraulic characteristics of the GE11 fuel design in the Framatome ANP Richland, Inc. (FRA-ANP) hydraulic test facility. Describe the details of the test results, how the data was selected for input into the Cycle 11 SLMCPR calculation, and their impact on this calculation in terms of the test accuracy.

Response

The actual description and documentation of the tests performed for the thermal-hydraulic characteristics of the GE-11 fuel design in the Framatome ANP Richland, Inc. (FRA-ANP) hydraulic test facility were provided to the technical reviewer during a trip to Framatome ANP. Both the ATRIUM-10 and GE-11 assemblies were tested in the Portable Hydraulic Tests Facility (PHTF) in Richland, WA. These assemblies were tested in the same facilities and the data reduced using the same methodology. The assembly flow uncertainty used in the safety limit methodology is composed of four uncertainties: single-phase pressure drop uncertainty, two-phase pressure drop uncertainty, manufacturing

uncertainty, and inlet region uncertainty. These four uncertainties are combined statistically to determine the bundle flow uncertainty. Of the four, the single-phase pressure drop uncertainty is the smallest and therefore, has the least impact on the bundle flow uncertainty. When the bundle flow uncertainty is applied to the safety limit methodology, it is ranked third in importance behind the radial peaking uncertainty and the additive constant uncertainty.

A presentation was made to the NRC Staff reviewer at Framatome ANP on August 1-2, 2001 that provided further background on this subject. A proprietary version of the presentation is included in Attachment 3 of this transmittal. A non-proprietary version of the presentation in included as part of Attachment 4 of this letter.

Question 3

Technical Specifications (TS) for the Core Operating Limits Report (COLR) include the TSs to be removed to the COLR report and the list of approved methodologies to support those TSs to be removed to the COLR report. Those methods should provide the calculation of the cycle-specific core operating limits specified in the COLR TS (see the guidance specified in GL 88-16). All the references in the table attached to the letter dated March 22, 2001, from K. V. Walters to J. B. Lee needed to support the COLR TS 5.6.5.a should be clearly defined for their input to calculate the particular core operating limit for the particular TS to be placed in the COLR. For example, the applicability of those eight approved topical reports to support LCO 3.2.1 to show that they satisfy the COLR TS criteria and also describe why the title specified in TS 5.6.5.a under 4) the LCO 3.2.4, 5) LCO 3.3.1.1 and 6) LCO 3.3.1.3 is not a cycle-specific operating limit. Provide the approved topical reports to support COLR TS 5.6.5.a items 4, 5, and 6 and identify those LTRs in TS 5.6.5.b.

Response

During the NRC's review of SLMCPR methodology performed at FRA-ANP, Richland, WA, on August 1 – 2, 2001, the NRC reviewer requested that FRA-ANP perform a review of the COLR reference list of FRA-ANP reports to ensure that each report needs to be included.

The Attachment to the letter from K. V. Walters to J. B. Lee, "Technical Specification and COLR References for Grand Gulf Nuclear Station and River Bend Station," GEXI:2001-00030/RBC-49449 dated March 22, 2001 was reviewed. All references were deemed necessary. Therefore, the list remains applicable "as is". All 24 references included in TS 5.6.5.b are applicable.

Also, the NRC reviewer requested an example of references for any given safety analysis package. The example chosen by FRA-ANP was the MCPR Safety Limit (LCO 3.2.2). The following references are needed to support the River Bend Cycle 11 MCPR Safety Limit.

Report	Justification
EMF-2158(P)(A) Revision 0, *Siemens Power Corporation Methodology for Boiling Water Reactors: Evaluation and Validation of CASMO-4/MICROBURN-B2*, Siemens Power Corporation, October 1999.	Used to develop local and radial power input and associated uncertainties for the MCPR Safety Limit calculation.
ANF-524(P)(A) Revision 2 and Supplements 1 and 2, *ANF Critical Power Methodology for Boiling Water Reactors*, Advanced Nuclear Fuels Corporation, November 1990.	Provides methodology for determining MCPR Safety Limit calculation
EMF-1997(P)(A) Revision 0, *ANFB-10 Critical Power Correlation*, Siemens Power Corporation, July 1998.	Presents the critical power correlation used for the GE-11 assemblies in the MCPR Safety Limit calculation.
EMF-1997(P), Supplement 1(P)(A), Revision 0, *ANFB-10 Critical Power Correlation: High Local Peaking Results*, Siemens Power Corporation, July 1998.	Provides local power peaking uncertainty used in MCPR Safety Limit calculation for high local peaking.
EMF-2209(P)(A) Revision 1, *SPCB Critical Power Correlation*, Siemens Power Corporation, July 2000.	Presents the critical power correlation used for the ATRIUM-10 assemblies in the MCPR Safety Limit calculation.
EMF—2245(P)(A) Revision 0, *Application of Siemens Power Corporation's Critical Power Correlations to Co-Resident Fuel*, Siemens Power Corporation, August 2000.	Provides the methodology to develop parameters to model non-FRA-ANP co-resident fuel with an approved critical power correlation. For this example, parameters were developed for the GE-11 fuel in the MCPR Safety Limit calculation.

The titles specified in TS 5.6.5.a for items 4) LCO 3.2.4, 5) LCO 3.3.1.1, and 6) LCO 3.3.1.3 do not describe a cycle-specific operating limit, but rather refer to the individual specifications that address certain operating limits that are specified in the Core Operating Limits Report (COLR). The reference to an individual Technical Specification LCO is consistent with Generic Letter 88-16.

The Enclosure of Generic Letter 88-16 states in part "...(If desired, the individual specifications that address [core] operating limits may be referenced.)..." It also states that "Individual specifications shall be revised to state that the values of

cycle specific parameters shall be maintained within the limits identified in the defined formal report."

LCOs 3.2.4, 3.3.1.1, and 3.3.1.3 state that certain cycle specific parameter values, such as monitored and restricted operating regions and allowable values for the APRM flow-biased simulated thermal power – high setpoints are maintained in the COLR. These TS requirements were established to restrict reactor operations in regions susceptible to neutronic/thermal hydraulic instability because such instabilities could result in exceeding the MCPR safety limit. These TS changes were approved by the NRC in Amendment 106.

Entergy's application for the amendment (Reference 1 below), states in part "...These changes add Limiting Conditions for Operation to the listing of those with allowable values controlled by the COLR(TS 5.6.5(a))...". The SER for River Bend Amendment No. 106 states in part "...These proposed changes include the addition of items 4, 5, and 6 to TS 5.6.5.a, and item 3 to TS 5.6.5.b. The staff has reviewed the proposed changes and finds them acceptable...". Entergy believes the current wording of TS 5.6.5.a is in accordance with the generic letter, and that the previous staff SER conclusions were appropriate and there is no need to change the titles or wording of TS 5.6.5.a.

Reference 24 of TS 5.6.5.b supports COLR TS items 5.6.5.a 4, 5, and 6.

Reference for Question 3:

2. Letter: R. J. King to US NRC Document Control Desk, "License Amendment Request (LAR) 1998-02, "Stability" Additional Information", RBG-44968, dated April 15, 1999.

Question 4

Discuss the process used to verify the quality of the parameter calculated by Entergy using the technology transfer from FRA-ANP.

Response

Generic Letter GL 83-11 Supplement 1, "Licensee Qualification for Performing Safety Analyses" delineates guidelines for qualifying licensees to use NRC-approved analysis methods. In CNRO-2000-00024 (Reference 2, below) Entergy described the implementation of these guidelines for safety analyses using Framatome methodology to apply approved Framatome critical power correlations to co-resident fuel (Reference 1, below). Entergy completed a

technology transfer program with Framatome to enable Entergy to apply this methodology, designed to satisfy the guidelines found in NRC Generic Letter 83-11 Supplement 1. Implementation of GL 83-11 requirements for this effort was described by Entergy in Reference 2 (below). The program included on-site training of Entergy personnel at Framatome facilities and consultation between Entergy and Framatome personnel during Entergy's application of the methodology.

The technology transfer program and the use of Framatome methodology to apply approved Framatome critical power correlations to co-resident fuel were performed in accordance with Entergy's 10CFR50 Appendix B quality assurance program in accordance with the GL 83-11 guidelines. GL 83-11 noted the licensee should demonstrate the quality of the application of vendor methods beyond the programmatic controls associated with a quality assurance program. These include development of application procedures and establishment of training and qualification programs for licensee personnel. Additionally GL 83-11 states that licensees should verify their ability to use the methods by comparing their calculated results to an appropriate set of benchmark data.

For Entergy's application of Framatome methodology to apply approved Framatome critical power correlations to co-resident fuel, the Global Nuclear Fuel (GNF) critical power test database for GE11 (References 4 and 5, below) was used as an appropriate set of benchmark data. The GNF GE11 critical power test database was the same used by GNF in the development and qualification of their GEXL07 critical power correlation for GE11 fuel. [ ]

[ ]

The additive constants, obtained by applying the Framatome additive constant methodology, were used with the corresponding Framatome critical power correlation to calculate the experimental critical power ratio (ECPR, ratio of predicted to measured critical power). The ECPR was calculated for all of the critical power test statepoints in the test database [ ]). All current NRC-approved Framatome critical power correlations were evaluated to identify the correlation providing the best performance for the GE11 fuel design. The Framatome ANFB10 (edge) critical power correlation described in Reference 3 was selected as providing the best fit to the GE11 critical power test data.

A statistical analysis was performed in accordance with Framatome critical power correlation qualification methods to demonstrate the acceptability of the results. The results of the statistical analysis, which included calculation of parameters such as the mean ECPR of the test data and the associated standard deviation, compared well with the results of GNF's analysis of the test data using their GEXL07 critical power correlation. [ ]

Mean ECPR and standard deviation results were compared between Entergy's evaluation of the GE11 critical power test data with Framatome's ANFB10 (edge) correlation and GNF's evaluation of the test data with their GEXL07 correlation. For the evaluation, the test data were grouped by parameters impacting correlation accuracy, following the approach employed by GNF in qualifying the GEXL07 correlation. [ ] can be used to accurately predict assembly critical power for the GE11 fuel design.

References for Question 4:

1. EMF-2245 (P)(A), "Application of Siemens Power Corporation's Critical Power Correlations to Co-Resident Fuel," Siemens Power Corporation.
2. Letter, M.A. Krupa (Entergy) to U.S. Nuclear Regulatory Commission, "Entergy Operations, Inc. Implementation of GL 83-11, Supplement 1, for Co-Resident Fuel CPR Calculations," CNRO-2000-00024, August 4, 2000.
3. EMF-1997 (P)(A), "ANFB10 Critical Power Correlation," Siemens Power Corporation.
4. NEDE-32002P, "GE11 Critical Power and Pressure Drop Test," GE Nuclear Energy.
5. NEDC-32058P, "GEXL07 Correlation—Correlation and Correlation Development," GE Nuclear Energy.

ATTACHMENT 4

TO

LETTER NO. CNRO-2001-00040

Supplemental information to RAI

Non-Proprietary Version

MCPR Safety Limit Methodology

Presentation to U.S. NRC

R. B. Macduff, Staff Engineer
August 2001

Richland, WA

Advanced Nuclear Power

Framatome ANP Richland, Inc.

MCPR Safety Limit Methodology

- Safety Limit Calculation Overview
- River Bend Cycle 10 Safety Limit Analysis

MCPR Safety Limit

- The purpose of the safety limit MCPR (SLMCPR) is to protect the core from boiling transition during both normal operation and during anticipated operational occurrences (transients)
- At least 99.9% of the rods in the core are expected to avoid boiling transition when the minimum CPR during the transient is greater than the SLMCPR
- The SLMCPR is determined by a statistical convolution of uncertainties associated with the calculation of thermal margin

MCPR Safety Limit Methodology
Thermal Limits

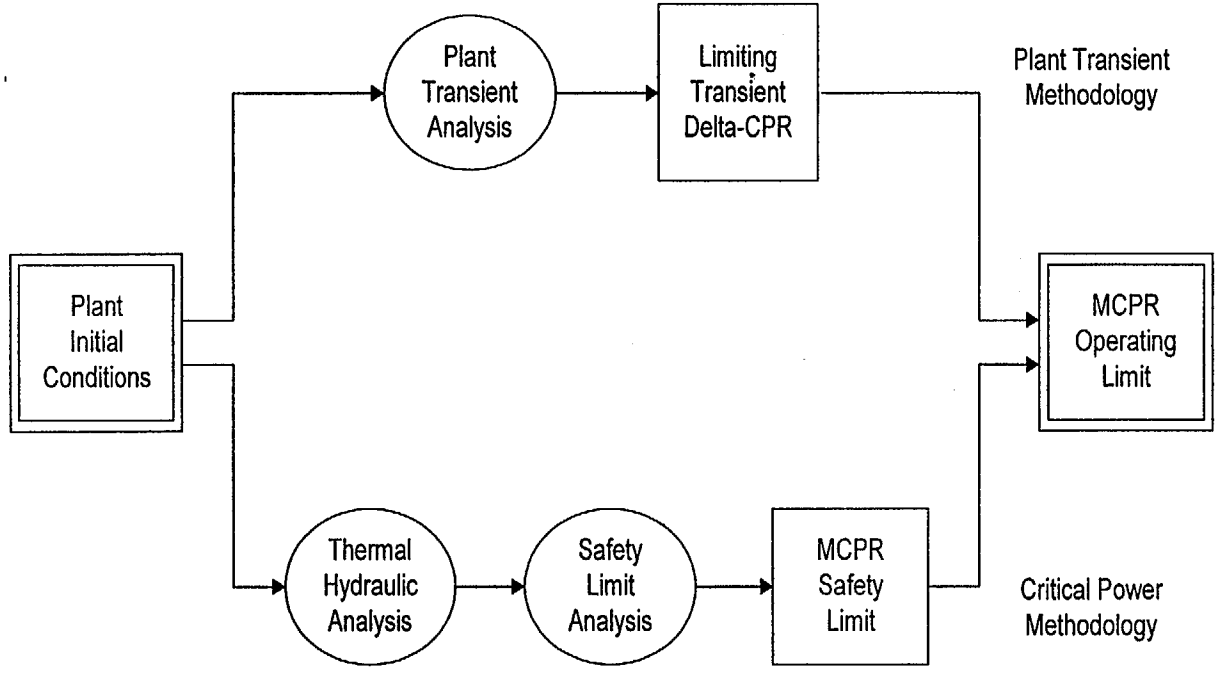

Thermal Limits Methodology

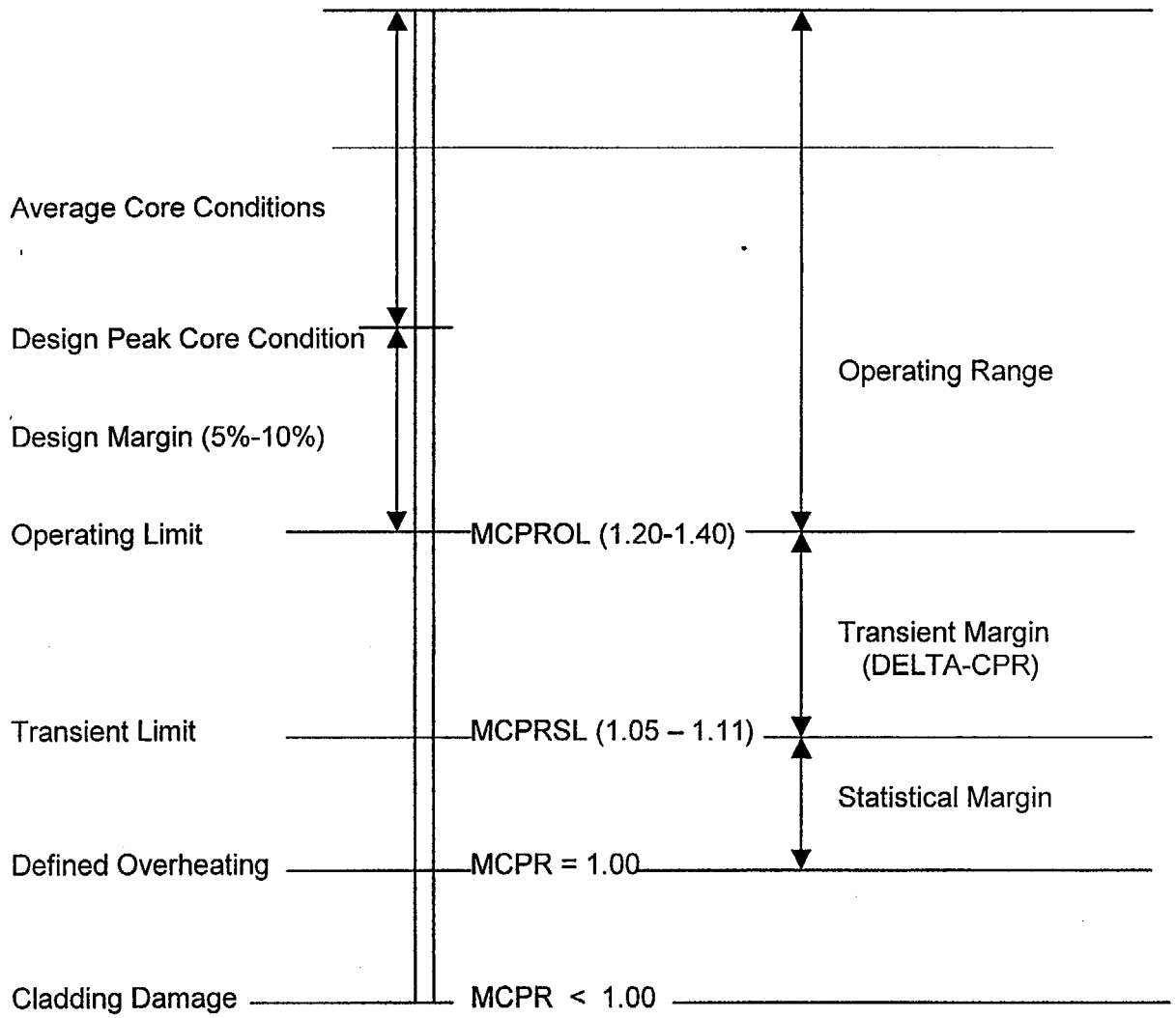

MCPR Safety Limit Methodology Computer Codes

Code	Use
MICROBURN-B2	Provides radial peaking factor and exposure for each bundle in the core and the core average axial power shape
CASMO-4	Provides local peaking factor distribution for each fuel type
XCOBRA	Provides hydraulic demand curves for each fuel type
SLPREP	Automation code which obtains neutronic data from MICROBURN-B2 and CASMO-4 and prepares SAFLIM2 input
SAFLIM2	Calculates the fraction of rods in boiling transition (BT) for a specified SLMCPR and exposure

MCPR Safety Limit Methodology
Thermal Limits

Flow Diagram for SLMCPR Calculation

Safety Limit Methodology

River Bend Cycle 10 - Safety Limit Analysis

- FRA-ANP methodology is applied for this cycle, which is a full core of GE fuel (except for Channel Bow)
- FRA-ANP methodology determines radial peaking factor uncertainty as a part of the MICROBURN-B2/CASMO4 methodology. This uncertainty is based upon statistical analysis that considers the in-plant measurements. The resulting radial peaking factor uncertainty is selected based upon fraction of tips that are operational, the fraction of LPRMs that are operational, and the interval between calibration.

River Bend Cycle 10 - Safety Limit Analysis (Continued)

- The radial peaking factor uncertainty used in the analysis is applied on an assembly by assembly basis
- Local peaking factor uncertainty is determined from the MICROBURN-B2/CASMO4 methodology and is also applied on an assembly by assembly basis
- Correlation specific uncertainties are selected based upon the correlation used and the data reduction process used
- Assembly flow uncertainties are based upon values derived from the test facility
- Plant uncertainties are provided by the customer

River Bend Cycle 10 - Safety Limit Analysis (Continued)

- Power Distribution

FRA-ANP uses a design basis step through. For River Bend, Cycle 10, this is determined from the core follow information and the projections to end of cycle.

The design basis step through provides the radial power distribution, axial power shape, and exposures for use in the analysis.

Each step of the step through is analyzed with regard to the safety limit performance so that the most limiting conditions can be identified and used for establishing the safety limit.

River Bend Cycle 10 - Safety Limit Analysis (Continued)

- FRA-ANP Design Basis Step Through using standard FRA-ANP uncertainties, i.e.,
  - Radial power uncertainty [ ]
  - Local peaking uncertainty [ ]
  - Additive constant uncertainty [*]
  - Flow uncertainty [ ]
  - Feed water flow uncertainty 0.018*
  - Feed water temperature uncertainty 0.008*
  - Core pressure uncertainty 0.007*
  - Core flow uncertainty 0.025*

* supplied by Entergy

River Bend Cycle 10 - Safety Limit Analysis (Continued)

- Study Results

SLMCPR	No. Rods	Fraction in BT
[		]

River Bend Cycle 10 - Safety Limit Analysis (Continued)

- Discussion of Results
  - [

]

Summary

- An overview of the SAFLIM2 methodology has been presented.
- An evaluation of a safety limit for River Bend Cycle 10 has been performed using the standard FRA-ANP methodology expect for channel bow.
- [

  ]
- Benefits from MICROBURN-B2/CASMO4 significantly contribute to this calculated safety limit.

Comparison of Uncertainties

	River Bend	BWR 4
• Radial power uncertainty	[b	c]
• Local peaking uncertainty	[b	c]
• Additive constant uncertainty	[a	]
• Flow uncertainty	[	]
• Feed water flow uncertainty	0.018[a]	0.0176
• Feed water temperature uncertainty	0.008[a]	0.0076
• Core pressure uncertainty	0.007[a]	0.005
• Core flow uncertainty	0.025[a]	0.025

[a] supplied by Entergy
[b] MICROBURN-B2
[c] MICROBURN-B

GE Hydraulic Testing

Presentation to U.S. NRC

T. H. Keheley, Sr. Staff Engineer
August 2001

Richland, WA

Advanced Nuclear Power

Framatome ANP Richland, Inc.

Hydraulic Testing

- The single-phase fuel assembly hydraulic loss coefficients are determined by analytical procedures or an experimental test program.
- The Portable Hydraulic Test Facility (PHTF) is used to measure the single phase loss coefficients of both the Framatome ANP fuel and the co-resident fuel.
- This eliminates the potential for experimental uncertainty due to the use of different test facilities and testing procedures.

Hydraulic Testing

- The performance of hydraulic testing and the reduction of data to loss coefficients at Framatome ANP is covered by guidelines and procedures:
  - EMF-2216, Correlation Development Guideline for the PHTF
  - EMF-1860,P102062, Guideline for Operating the Portable Hydraulic Test Facility
  - EMF-1860,P102061, Guideline for PHTF Hydraulic Testing
  - EMF-1860,P102020, Rev. 1, Procedure for RTF Test Instrumentation Calibrations
  - EMF-1860,P102069, Procedure for PHTF Data Reduction

GE-11 Hydraulic Test Program

- A hydraulic test program of the GE-11 was performed on September 2 and 3, 1999, in the PHTF at the Framatome ANP facility in Richland, WA
- The test assembly was a full size GE-11 supplied by GGNS
- The inlet orifice hardware, exit hardware, and assembly channel was supplied by Framatome
- The test was performed in accordance with Design Test Authorization (DTA) EMF-DTA-763, Revision 0
- Test results were reported in EMF-2236

Testing Summary

- Differential pressure measurements were taken over the nominal range of test conditions:

• Temperatures	150°F and 270°F
• Flow Rates	15 to 81 lbm/sec
• Average Pressure	155 psia
• Bare Rod Reynolds Number	20,000 to 214,000

Portable Hydraulic Test Facility

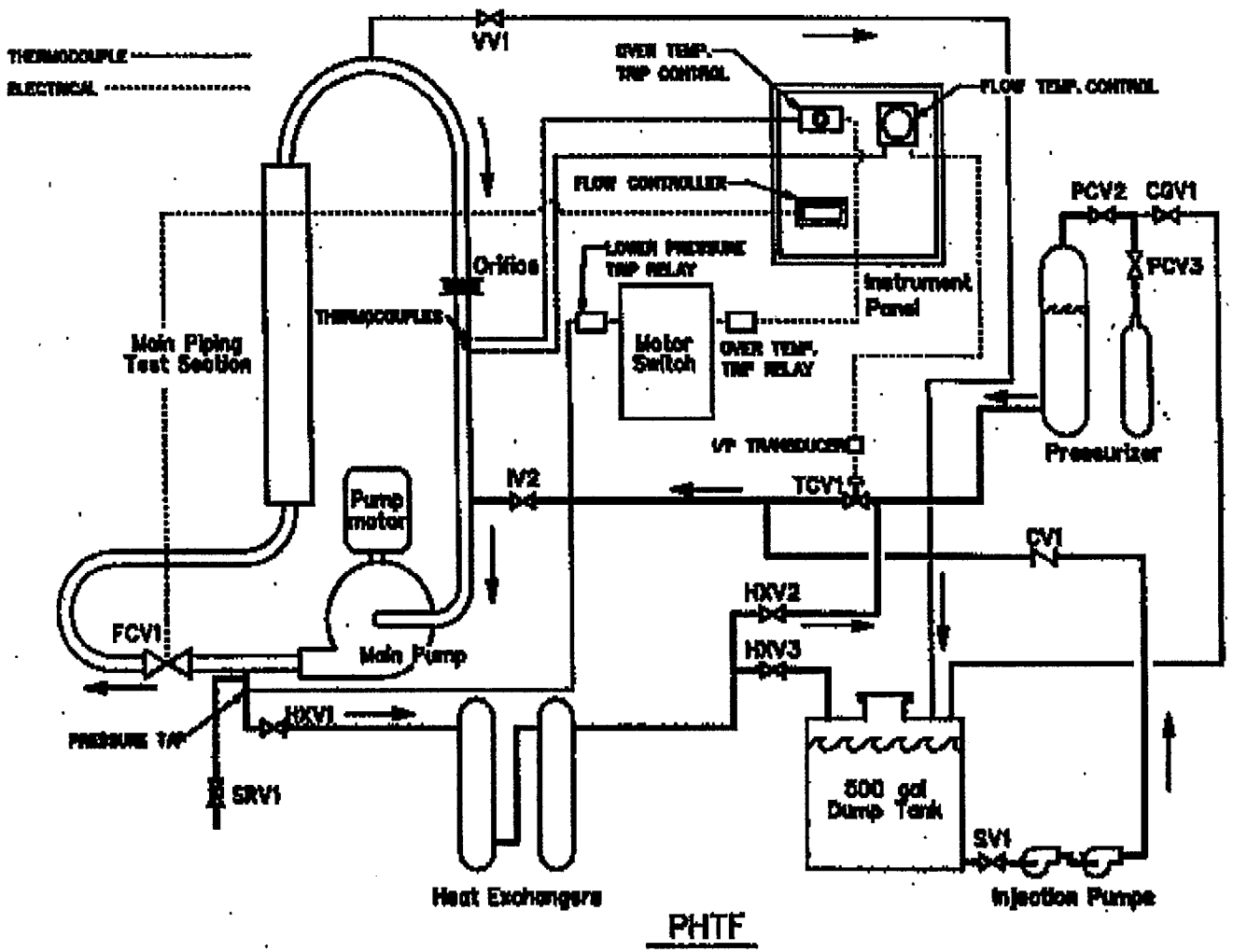

Portable Hydraulic Test Facility

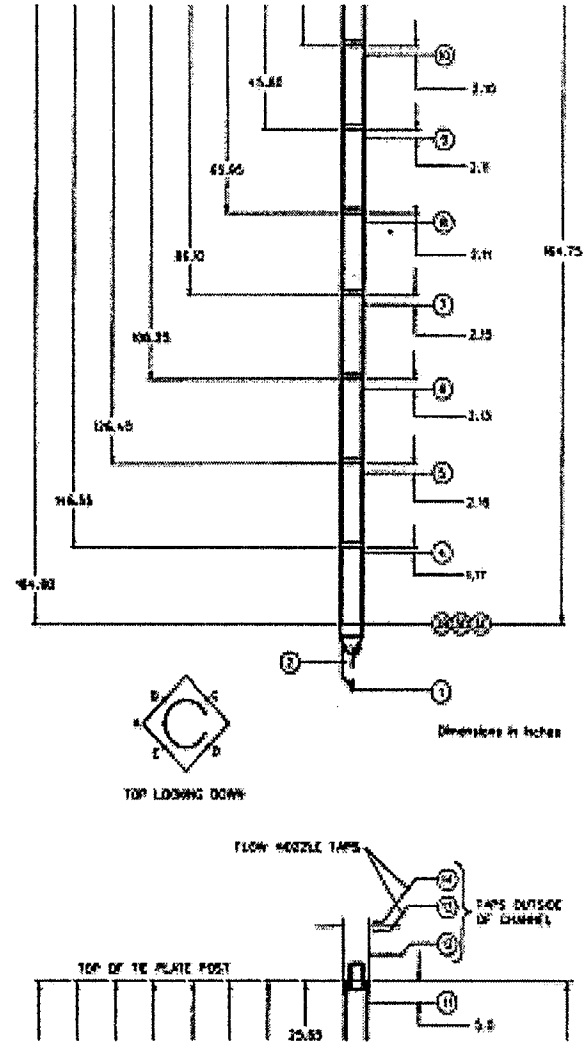

Measured Pressure Differential Pairs

Measured Pressure Differential Pairs

Tap Pairs

1-2	3-13	8-9
1-3	4-5	8-11
1-4	5-6	9-10
1-5	5-8	10-11
1-11	5-10	10-12
1-12	5-11	11-12
1-13	6-7	11-14
1-14	6-9	13-12
2-3	6-11	13-14
2-4	7-8	
3-4	7-10	

Testing Accuracy

- The PHTF has had continual improvements over the years; to assure accuracy the loop is re-calibrated after modification
- Replicate test points were added to the test programs by EMF-2216
- Each pressure reading is taken from 2 different transducers
- Computer operated Data Acquisition System
  - assures accurate and consistent readings
  - checks flow before and after each reading to assure no change in state point

Spacers #2 - #4 Loss Coefficients