DWG NO. ID-1SI-MU-036

REV.	ZONE	DESCRIPTION					
		DRAWN	CHECKED	DSGN. LDR.	ENGINEER	MANAGER	DATE
1	AS NOTED	REVISED AS PER FCN #C052409					
		LIBANO	SHAHAN				7-27-82

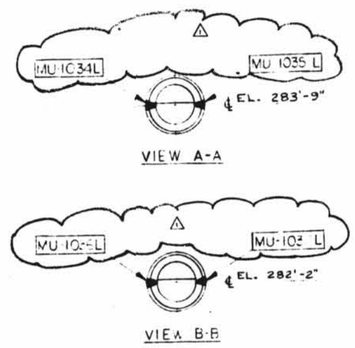

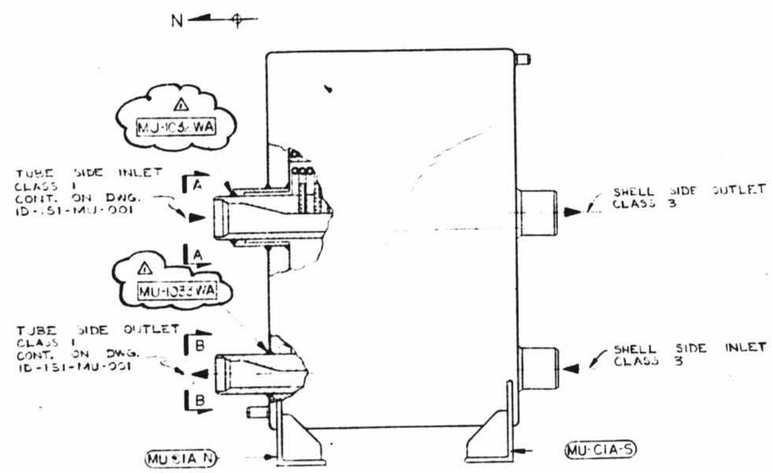

LETDOWN COOLER
MU-CIA

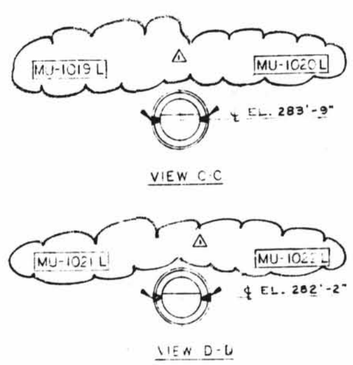

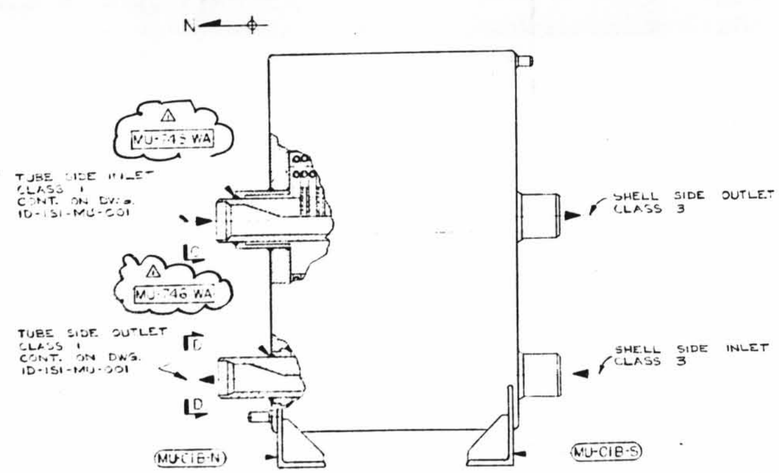

LETDOWN COOLER
MU-CIB

D-5

1SI CLASS 1 & 3 AS DEFINED ON ID-1SI-FD-016

DRAWN R. EDMONDS JR. 4-4-84	GPU Nuclear	
CHECKED N/A DATE	1SI CONFIGURATION SKETCH TMI-1	
DESIGN LEADER DATE	LETDOWN COOLER DETAIL	
ENGINEER DATE	DWG. NO. ID-1SI-MU-036	REV. 1
MANAGER APPROVAL DATE	SCALE NONE	
ENG. MECH.	BA.	TASK NO

NO.	DWG. NO.	REV.	TITLE
2	B&R E-304-661	16	MU PLAN & SECTION
1	DRAWING MAN. D-1-0-3-2-1	F	LETDOWN COOLER DETAIL

REFERENCES