AmerGen

AmerGen Energy Company, LLC
Three Mile Island Unit 1
Route 441 South, P.O. Box 480
Middletown, PA 17057

Telephone: 717-944-7621

An Exelon/British Energy Company

August 2, 2001
5928-01-20111

U.S. Nuclear Regulatory Commission
Attn: Document Control Desk
Washington, DC 20555-0001

Dear Sir or Madam:

SUBJECT: THREE MILE ISLAND, UNIT 1 (TMI UNIT 1)
OPERATING LICENSE NO. DPR-50
DOCKET NO. 50-289
INSERVICE INSPECTION (ISI) - THIRD TEN YEAR INSPECTION INTERVAL PROGRAM PLAN

Attached for your review are proposed relief requests and proposed alternatives (RR-00-01 through RR-00-14) associated with the third 120 month Inservice Inspection (ISI) Interval for TMI Unit 1 which began on April 20, 2001. Also enclosed for your information, is the ISI Program Plan as required by Code Sections IWA-1400 and IWA-2420. In accordance with 10CFR 50.55a(g)(4)(ii), AmerGen Energy Company, LLC (AmerGen) is required to adopt the 1995 Edition with 1996 Addenda of the ASME Section XI Code for the third 120 month ISI interval program. Also included is RR-8 related to ASME Section XI, subsection IWE containment inspections, as discussed below. These requests are in addition to the three proposed alternatives (VIII-1, VIII-2, and VIII-3) related to implementation of performance demonstration methods submitted by AmerGen on December 21, 2000 requesting approval prior to the TMI Unit 1 Cycle 14 Refueling Outage (1R14) which is scheduled for October 2001. Since implementation of the performance demonstration methods are not affected by this update to a later Code Edition, the NRC's approval of proposed alternatives VIII-1, VIII-2, and VIII-3 will apply to deferred second interval examinations performed during the 1R14 Outage as well as examinations performed to meet the third ten-year interval requirements.

The TMI Unit 1 ISI program includes examination, repair and replacement of Section XI ISI components, augmented inspections requirements, and system pressure tests. At TMI Unit 1 the Inservice Testing (IST) program is maintained and implemented separately from the ISI program. Resulting from the extended shutdown of TMI Unit 1 following the accident at TMI Unit 2, the TMI Unit 1 ISI and IST ten-year intervals do not coincide.

Containment inspections are performed in accordance with ASME Section XI, subsections IWE and IWL as required by the Containment Inspection Rule, which became effective on

A047

August 2, 2001
5928-01-20111

September 9, 1996. Expedited containment inspections were performed at TMI Unit 1 in 1999 and the results were reported in the AmerGen submittal dated January 14, 2000. The program plan for the containment inspections is not included in this submittal, but is available at the TMI site for NRC review. In addition to relief regarding the IWE containment inspections that was granted by the NRC in a safety evaluation dated April 27, 2000, an additional request for relief (RR-8) from Section XI, Subsection IWE, 1992 Edition with 1992 Addenda is included with this letter. This additional request would apply to inspections of bolted connections that could be disassembled at any time, not necessarily during outages where the majority of the IWE containment inspections are performed. RR-8 is numbered in sequence with previously approved IWE relief requests, numbered RR-1 through RR-7, applicable to the first ten-year interval IWE containment inspections.

Enclosure 1 contains the ISI Program Plan, Relief Requests, the ISI Classification Basis Document, and the ISI Selection Document. The ISI Selection Document includes Reports and Tables that are not required for this submittal; but are available at the site for NRC review.

If any additional information is needed, please contact Bob Knight at (717) 948-8554.

Very truly yours,

Michael P. Gallagher
Director – Licensing
Mid-Atlantic Regional Operating Group
MPG/mrk

Enclosures: 1) Three Mile Island Nuclear Station Unit 1, ISI Program, Third Ten-Year Inspection Interval

Cc: H. J. Miller, Administrator, USNRC Region I
T. G. Colburn, USNRC Senior Project Manager, TMI Unit 1
J. D. Orr, USNRC Senior Resident Inspector, TMI Unit 1
File No. 01035

THREE MILE ISLAND NUCLEAR STATION
UNIT 1

ISI PROGRAM
THIRD TEN-YEAR INSPECTION INTERVAL

Commercial Service Date:

Unit 1 – 09/02/74

Three Mile Island Nuclear Station
Route 441 South, Londonderry Township
Middletown, Pennsylvania 17057

AmerGen Energy Company, LLC

THREE MILE ISLAND NUCLEAR STATION
UNIT 1

ISI PROGRAM PLAN
THIRD TEN-YEAR INSPECTION INTERVAL

Commercial Service Date:

Unit 1 – 09/02/74

Three Mile Island Nuclear Station
Route 441 South, Londonderry Township
Middletown, Pennsylvania 17057

AmerGen Energy Company, LLC

REVISION CONTROL SHEET

TITLE: ISI Program Plan Document
Third Ten-Year Inspection Interval
Three Mile Island Nuclear Station, Unit 1

DOCUMENT NUMBER: TMI-1-BASIS

REVISION: 0

PREPARED: Rich Ostrowski
Washington Group International
ISI Engineer

REVIEWED: R.B. Corbett
Program Engineer

APPROVED: Howard Crawford 4/4/01
Manager, Programs

Each time this document is revised, the following table should be completed to provide a detailed record of the revision history. The major changes should be outlined within the table. Editorial and formatting revisions are not required to be logged. The signatures above apply only to the changes made in the revision noted. If historical signatures are required, station archives will need to be retrieved.

Revision	Date	Revision Summary
0	4/19/01	Initial issuance.

Note: This ISI Program Plan (Sections 1-10 inclusive) is controlled by the TMI-1 Station Engineering Programs Group.

REVISION SUMMARY

Section	Effective Pages	Revision	Date
	i to iii	0	4/19/01
1.0	1-1 to 1-4	0	4/19/01
2.0	2-1 to 2-12	0	4/19/01
	(See Pages 2-24 and 2-25 for effective pages and revision status of each individual technical approach)		
3.0	3-1 to 3-7	0	4/19/01
4.0	4-1 to 4-2	0	4/19/01
5.0	5-1 to 5-2	0	4/19/01
6.0	6-1	0	4/19/01
7.0	7-1 to 7-9	0	4/19/01
8.0	8-1 to 8-4	0	4/19/01
	(See Pages 8-2 through 8-7 for effective pages and revision status of each individual relief request)		
9.0	9-1 to 9-2	0	4/19/01
10.0	10-1	0	4/19/01

TABLE OF CONTENTS

SECTION	DESCRIPTION	PAGE
1.0	INTRODUCTION AND BACKGROUND	1-1 to 1-4
2.0	BASIS FOR INSERVICE INSPECTION PROGRAM	2-1 to 2-12
3.0	COMPONENT ISI PLAN	3-1 to 3-7
4.0	COMPONENT SUPPORT ISI PLAN	4-1 to 4-2
5.0	SYSTEM PRESSURE TESTING ISI PLAN	5-1 to 5-2
6.0	CONTAINMENT ISI PLAN	6-1
7.0	IN-SERVICE INSPECTION SUMMARY TABLES	7-1 to 7-9
8.0	RELIEF REQUESTS FROM ASME SECTION XI	8-1 to 8-4
9.0	IN-SERVICE INSPECTION PROGRAM NOTES	9-1 to 9-2
10.0	REFERENCES	10-1

1.0 INTRODUCTION AND BACKGROUND

1.1 Introduction

This Inservice Inspection (ISI) Program Plan details the requirements for the examination and testing of ISI Class 1, Class 2, and Class 3 pressure retaining components and component supports at Three Mile Island Nuclear Station, Unit 1 (TMI Unit 1). This ISI Program Plan also includes augmented inservice inspections and pressure testing requirements committed to by TMI Unit 1. At TMI Unit 1, the Inservice Testing (IST) program is maintained and implemented separately from the ISI program.

The Third Inservice Inspection Interval is effective from April 20, 2001 through April 19, 2011 for TMI Unit 1.

The Third Inservice Inspection Interval is divided into three successive inspection periods as determined by calendar years of plant service within the inspection interval. Identified below are the period dates for the Third Inservice Inspection Interval as defined by Inspection Program B. In accordance with IWA-2430(d)(3), the inspection periods specified below may be decreased or extended by as much as one year to enable inspections to coincide with TMI Unit 1's refueling outages.

Period 1 – April 20, 2001 through April 19, 2004
Period 2 – April 20, 2004 through April 19, 2008
Period 3 – April 20, 2008 through April 19, 2011

1.2 Background

General Public Utilities obtained a Construction Permit to build TMI Unit 1, on April 19, 1967. After satisfactory plant construction and preoperational testing was completed, General Public Utilities was granted a full power operating license for Unit 1, and subsequently commenced commercial operation on September 2, 1974. Subsequently TMI Unit 1 was purchased by AmerGen Energy Company, LLC on December 20, 1999.

1.3 First Interval ISI Program

The first 10-year inservice inspection interval for TMI Unit 1 started at the beginning of commercial operation for the unit on September 2, 1974. The first period of the first interval was based on the ASME Boiler and Pressure Vessel Code, Section XI, 1970 Edition with Addenda through winter 1970. Selection of components subject to examination for the first period was based on an owner established "Focused Approach" program.

Federal regulations later required an update of Section XI, ISI Program to comply with the 1974 Edition with Addenda through the summer of 1975 for the remaining two periods of the first interval beginning on January 1, 1978.

Section XI states that plants which are out of service continuously for one year or more may extend the inspection interval for an equivalent period. TMI Unit 1 was out of service between February 17, 1979 and October 3, 1985 due to a scheduled refueling outage and an Order of the NRC resulting from the accident at TMI Unit 2. GPUN has chosen to extend the first 10-year interval by an equivalent time period. Therefore, TMI Unit 1's first 10-year inspection interval started September 2, 1974 and ended on April 19, 1991.

1.4 Second Interval ISI Program

The second 10-year ISI interval began on April 20, 1991 and ends April 19, 2001. As allowed by Section XI, 1974 Edition, Summer 1975 Addenda, IWA-2400(a), certain first interval examinations were deferred to the Cycle 9 Refueling (9R) Outage, which was scheduled in October, 1991.

The Pressure Test Program was not applicable to the Class 2 and Class 3 systems until the 10 CFR 50 requirement to include them became effective on January 1978. Therefore, pressure tests of Class 2 and Class 3 systems did not begin until the third period of the first interval. This results in only two-thirds of all hydrostatic tests having been completed by the end of the first ten-year (120 month) ISI interval. Components not hydrostatically tested during the first 120 month interval (the remaining one-third of the total number of such tests) were be tested during the first period of the second interval to the requirements of the 1986 Edition of the Section XI Code. One hundred percent (100%) of the total number of hydrostatic tests were completed by the end of the first period of the second interval.

As allowed by Section XI, 1986 Edition, IWA-2430(d) certain second interval examinations will be deferred to the Cycle 14 Refueling (1R14) Outage which is scheduled in September, 2001.

1.5 Third Interval ISI Program

Per 10 CFR 50.55a(g), AmerGen is required to update the ISI program to meet the requirements of ASME Section XI once every ten years or inspection interval. The ISI program is required to comply with the latest edition and addenda of the Code incorporated by reference in 10 CFR 50.55a 12 months prior to the start of the interval per 10 CFR 50.55a(g)(4)(ii). Accordingly, the 1995 Edition, 1996 Addenda of ASME Section XI is the code that TMI Unit 1 must meet for the Third Inspection Interval.

This Plan addresses Subsections IWA, IWB, IWC, IWD, and IWF of ASME Section XI, and utilizes Inspection Program B as defined therein, as modified by Relief Request RR-00-13.

1.6 Code Cases

Per Footnote 6 of 10 CFR 50.55a, ASME Code Cases that have been determined to be suitable for use in ISI Program Plans by the NRC are listed in Regulatory Guide 1.147, "Inservice Inspection Code Case Acceptability-ASME Section XI, Division 1." The approved Code Cases in Regulatory Guide 1.147, which are being utilized by TMI Unit 1, are included in Section 2.1.1. The latest version of Regulatory Guide 1.147 issued, as of August 6, 1999 is Revision 12. As this guide is revised, newly approved Code Cases should be assessed for plan implementation at TMI Unit 1.

Footnote 6 also states that the use of other Code Cases (than those listed in Regulatory Guide 1.147) may be authorized by the Director of the Office of Nuclear Reactor Regulation upon request pursuant to 10 CFR 50.55a(a)(3). Code Cases not approved for use in Regulatory Guide 1.147, which are being utilized by TMI Unit 1 through a Relief Request, are summarized in the appropriate program section of this document (3.0, 4.0, or 5.0) and the associated Relief Requests are included in Section 8.0.

1.7 Relief Requests

In accordance with 10 CFR 50.55a, when a licensee proposes alternatives to ASME Section XI requirements, which provide an acceptable level of quality and safety; determines compliance with ASME Section XI requirements would result in hardship or unusual difficulty without a compensating increase in the level of quality and safety; or determines that specific ASME Section XI requirements for inservice inspection are impractical, the licensee shall notify the NRC and submit information to support the determination.

The submittal of this information will be referred to in this document as a "Relief Request" or "Request for Relief." Relief Requests for the third interval are included in Section 8.0 of this document. The Relief Request format utilized includes a section with the heading **"BASIS FOR RELIEF."** The text of the Relief Requests contained in Section 8.0 will demonstrate that: the proposed alternatives provide an acceptable level of quality and safety per 10 CFR 50.55a(a)(3)(i); or compliance with the specified requirements would result in hardship or unusual difficulty without a compensating increase in the level of quality and safety per 10 CFR 50.55a(a)(3)(ii); or the code requirements are considered impractical per 10 CFR 50.55a(g)(5)(iii).

Per 10 CFR 50.55a paragraphs (a)(3) and (g)(6)(i), the Director of the Office of Nuclear Reactor Regulation will evaluate Relief Requests and "may grant such

relief and may impose such alternative requirements as it determines is authorized by law and will not endanger life or property or the common defense and security and is otherwise in the public interest giving due consideration to the burden upon the licensee that could result if the requirements were imposed on the facility."

2.0 BASIS FOR INSERVICE INSPECTION PROGRAM

2.1 ASME Section XI Examination Requirements

As required by the Code of Federal Regulations, Title 10, Part 50, Section 55a, (10 CFR 50.55a), this program was developed in accordance with the requirements detailed in the 1995 Edition, 1996 addenda, of the ASME Boiler and Pressure Vessel Code, Section XI, Division 1, Subsections IWA, IWB, IWC, IWD, IWF, Mandatory Appendices, and Inspection Program B of IWA-2432.

The Containment Inservice Inspection (CISI) Program Plan per IWE and IWL is not included in this document except for Relief Requests. The Relief Requests have been included for numbering, tracking, and submittal purposes. A program addressing inspection requirements of these subsections is maintained in a separate document.

2.1.1 ASME Section XI Code Cases

As referenced by 10 CFR 50.55a Footnote 6 and allowed by USNRC Regulatory Guide 1.147, Revision 12, the following Code Cases are being incorporated into the TMI Unit 1 ISI Program:

N-416-1 Alternative Pressure Test Requirements for Welded Repairs or Installation of Replacement Items by Welding, Class 1, Class 2, Class 3, Section XI, Division 1.

- Code Case N-416-1 is acceptable subject to the following condition in addition to those conditions specified in the Code Case. Additional surface examinations shall be performed on the root pass layer of butt and socket welds on the pressure retaining boundary of Class 3 components. The surface examination method is to be in accordance with the requirements of the 1992 Edition of ASME Code Section III.

N-460 Alternative Examination Coverage for Class 1 and Class 2 Welds, Section XI, Division 1.

N-504-1 Alternative Rules for Repair of Class 1, Class 2, and Class 3 Austenitic Stainless Steel Piping, Section XI, Division 1.

N-513 Evaluation Criteria for Temporary Acceptance of Flaws in Class 3 Piping.

- Code Case N-513 is approved for use by 10 CFR 50.55a subject to the following conditions:

  a. The specific factors of 4.0 must be specified, and Code Case may not be applied to:

     (1) Components other than pipe and tube, such as pumps, valves, expansion joints, and heat exchangers.

     (2) Leakage through a flange gasket.

     (3) Threaded connections employing nonstructural seal welds for leakage prevention (through seal weld leakage is not a structural flaw, thread integrity must be maintained.)

     (4) Degraded socket welds.

N-522 Pressure Testing of Containment Penetration Piping, Section XI, Division 1.

- Code Case N-522 is acceptable subject to the following condition in addition to those conditions specified in the Code Case. The test should be conducted at the peak calculated containment pressure and the test procedure should permit the detection and location of through-wall leakage in containment isolation valves (CIVs) and pipe segments between the CIVs.

N-523-1 Mechanical Clamping Devices for Class 2 and Class 3 Piping.

- Code Case N-523-1 approved for use by 10 CFR 50.55a.

Additional Code Cases may be invoked in the future based on new plan requirements or revisions to Regulatory Guide 1.147. Any Code Cases invoked in the future shall be in accordance with those approved for use in the latest published revision of Regulatory Guide 1.147 at that time.

2.2 Augmented Examination Requirements

Augmented examination requirements are those examinations performed above and beyond the requirements of ASME Section XI.

The following augmented examination requirements are being implemented in accordance with the latest licensing agreements pertaining to them. These requirements, which are specified by documents other than ASME Section XI, interface with the TMI Unit 1 ISI Program. Sections 3.3, 4.3, and 5.1 provide details on augmented examinations.

2.2.1 USNRC Branch Technical Position MEB 3-1, "High Energy Fluid Systems, Protection Against Postulated Piping Failures in Fluid Systems Outside Containment," dated November 24, 1975. Examinations of welds as a result of postulated break analysis performed for these locations.

2.2.2 Reactor Coolant Pump Flywheels – Technical Specifications Section 4.2.4 requires the examinations on the accessible areas of all reactor coolant pump motor flywheels once every ten years. (Reference NRC Regulatory Guide 1.1.4.)

2.2.3 Technical Specification Section 4.15, Main Steam System Welds, requires the volumetric examination of welds at 3½-year intervals or the nearest refueling outage based on calculations in which postulated failure would produce pressures in excess of compartment wall and/or slab capabilities.

2.2.4 Augmented Examinations of Class 2 Decay Heat Removal, Reactor Building Spray, Makeup and Purification, and Spent Fuel Cooling—AmerGen committed to perform volumetric examination of 7.5% of the nonexempt piping welds where piping wall thickness (<.375 inch).

2.2.5 Reactor Vessel Head and Internals Handling Fixture (tripod)—AmerGen commitment to NUREG 0612 "Control of Heavy Loads," requires visual and magnetic particle examination of load bearing welds.

2.3 The Quality Group Classification and System Safety Classes

The Quality Group Classification of TMI Unit 1 systems and components meets the intent of USNRC Regulatory Guide 1.26. In addition, the criteria of ANSI N18.2a was utilized to support Regulatory Guide 1.26 and provide secondary references as previously discussed. Regulatory Guide 1.26 and ANSI N18.2a, Classification Criteria, are reflected in the piping classes shown on the ISI Boundary Sketches as detailed in Section 2.4.

2.4 TMI Unit 1 Systems and Components Subject To Examination

The systems and components included in the TMI Unit 1 ASME Section XI Program are typically those designed per ASME Section III, ANSI B31.7, and ANSI B31.1. These systems and components are identified on the ISI Boundary Sketches listed in Table 2.4-1. The ISI Boundary Sketches are color-coded versions of TMI Unit 1 GAI

Flow Diagrams. A summary of the color codings utilized for ISI Class 1, Class 2, and Class 3 components is included on each ISI Boundary Sketch.

TABLE 2.4-1
ISI BOUNDARY SKETCH LISTING

Drawing Number	Title
ID-ISI-SS-001	Symbols for ISI Boundary and Configuration Sketches
ID-ISI-FD-001	Main Steam System
ID-ISI-FD-002	River Water System
ID-ISI-FD-003	Decay Heat Closed Cycle Cooling System
ID-ISI-FD-004	Core Flooding System
ID-ISI-FD-005	Decay Heat Removal System
ID-ISI-FD-008	Condensate System
ID-ISI-FD-009	Emergency Feedwater and Feedwater Systems
ID-ISI-FD-010	Nuclear Services Closed Cycle Cooling Water System
ID-ISI-FD-011	Control Building Chilled Water System
ID-ISI-FD-012	Reactor Building Spray System
ID-ISI-FD-015	Penetration Pressurization and Hydrogen Recombiner Systems
ID-ISI-FD-016	Makeup and Purification System (Letdown Portion)
ID-ISI-FD-017	Makeup and Purification System (Makeup Portion)
ID-ISI-FD-018	Spent Fuel Cooling System
ID-ISI-FD-019	Reactor Coolant System
ID-ISI-FD-020	Chemical Sampling and OTSG Chemical Cleaning Systems
ID-ISI-FD-021	Chemical Addition and Liquid Waste Disposal Systems
ID-ISI-FD-022	Intermediate Cooling System
ID-ISI-FD-023	Hydrogen Purge System and Miscellaneous Penetrations

2.5 TMI Unit 1 Nonexempt ISI Class Components and Component Supports

The TMI Unit 1 ISI Class 1, Class 2, and Class 3 nonexempt components which require inspection are those which have not been exempted under the criteria of Section XI, Subarticles IWB-1220, IWC-1220, and IWD-1220. These components are identified on the ISI Boundary Sketches listed in Table 2.4-1.

The Isometric and Component Drawings included in Table 2.5-1 identify all nonexempt ISI Class 1 and Class 2 components and component supports at TMI Unit 1. Class 3 supports are included in the piping analysis series drawings identified in Table 2.5-1.

A summary of TMI Unit 1 Unit 1 Section XI, nonexempt components and component supports is included in Section 7.0.

TABLE 2.5-1
TMI UNIT 1 ISI ISOMETRIC AND COMPONENT DRAWINGS

DRAWING NUMBER	TITLE
MAIN STEAM SYSTEM (MS)	
ID-ISI-MS-001	MS Piping From Steam Generator RC-H-1A to Penetrations 112 & 113
ID-ISI-MS-002	MS Piping From Steam Generator RC-H-1B to Penetrations 114 & 419
ID-ISI-MS-003	MS Piping Intermediate Building From Penetration Nos. 419 & 114
ID-ISI-MS-004	MS Piping Intermediate Building From Penetration Nos. 112 & 113
ID-ISI-MS-005	MS Piping to Emergency Feedwater Pump Turbine
ID-ISI-MS-006	MS Piping to Emergency Feedwater Pump Turbine
ID-ISI-MS-007	MS System Details
ID-411-23 Series	MS Piping Analysis (Class 3 Supports)
RIVER WATER SYSTEM (RW)	
ID-531-23 Series	RW Piping Analysis (Class 3 Supports)
ID-533-23 Series	RW Piping Analysis (Class 3 Supports)
ID-534-23 Series	RW Piping Analysis (Class 3 Supports)
ID-ISI-XX 001	Penetration Details
DECAY HEAT CLOSED CYCLE COOLING SYSTEM (DC)	
ID-543-23 Series	DC Piping Analysis (Class 3 Supports)

TABLE 2.5-1 (CONT.)
TMI UNIT 1 ISI ISOMETRIC AND COMPONENT DRAWINGS

DRAWING NUMBER	TITLE
CORE FLOODING SYSTEM (CF)	
ID-ISI-CF-001	Core Flood System From Tank CF-T1A
ID-ISI-CF-002	Core Flood System From Tank CF-T1B
ID-ISI-CF-003	Core Flood Tanks CF-T1A & CF-T1B
DECAY HEAT REMOVAL SYSTEM (DH)	
ID-ISI-DH-001	DH System – Reactor Building From RC Loop "B"
ID-ISI-DH-002	DH System – 10" Line From Core Flood 14" Pipe
ID-ISI-DH-003	DH System – Reactor Building From 14" Core Flood Pipe
ID-ISI-DH-004	DH System – Auxiliary Building From Penetrations 303, 306, & 310
ID-ISI-DH-005	Decay Heat Systems Details
ID-ISI-DH-006	Decay Heat Removal Auxiliary Building Elevation 261'-0"
ID-ISI-DH-007	Decay Heat Removal Auxiliary Building Elevation 261'-0"
ID-ISI-DH-008	Decay Heat Pump DH-P1B Suction & Cooler DH-C1B Outlet
ID-ISI-DH-009	Decay Heat Cooler DH-C1B Outlet
ID-ISI-DH-010	Decay Heat Pump Discharge & Cooler DH-C1B Inlet
ID-ISI-DH-011	Decay Heat Removal 14" DH Pump Suction From BWST
ID-ISI-DH-012	Decay Heat Removal 10" Line From BWST
ID-ISI-DH-013	Decay Heat Removal 24" Line From BWST
ID-ISI-DH-014	Decay Heat Removal 8" Line From BWST
ID-ISI-DH-015	DH 8" Line to SF Cooling – to RB Spray
ID-ISI-DH-016	Decay Heat Removal 3" Line to SF Cooling System
ID-ISI-DH-017	Decay Heat Removal 2" Pressurizer Spray Line
ID-ISI-DH-018	Decay Heat Removal 2" Pressurizer Spray Line
ID-ISI-DH-019	Decay Heat Removal Cooler DH-C1A Outlet
ID-ISI-DH-020	Decay Heat Removal 6" DH-C1A & DH-C1B Crossconnect
ID-ISI-DH-021	DH Pump DH-P1A Discharge & Cooler DH-C1A Inlet
ID-ISI-DH-022	Decay Heat Removal Pump DH-P1A Suction
ID-ISI-DH-023	Decay Heat Removal Auxiliary Building Elevation 261'-0"
ID-ISI-DH-024	Decay Heat Removal – Hanger Details
ID-ISI-DH-025	Decay Heat Coolers DH-C1A & DH-C1B
ID-ISI-XX-001	Penetration Details

TABLE 2.5-1 (CONT.)
TMI UNIT 1 ISI ISOMETRIC AND COMPONENT DRAWINGS

DRAWING NUMBER	TITLE
CONDENSATE SYSTEM (CO)	
ID-421-23 Series	CO Piping Analysis (Class 3 Supports)
EMERGENCY FEEDWATER SYSTEM (EF)	
ID-ISI-EF-001	EF System Inside Reactor Building to Steam Generator RC-H-1B
ID-ISI-EF-002	EF System Inside Reactor Building to Steam Generator RC-H-1A
ID-ISI-EF-003	EF System Emergency Feedwater Heaters
ID-ISI-EF-004	EF System Outside Reactor Building to Steam Generator RC-H-1A
ID-ISI-EF-005	EF System Outside Reactor Building to Steam Generator RC-H-1B
ID-524-23 Series	EF Piping Analysis (Class 3 Supports)
FEEDWATER SYSTEM (FW)	
ID-ISI-FW-001	FW System to Steam Generator RC-H-1B
ID-ISI-FW-002	FW System to Steam Generator RC-H-1A
ID-ISI-FW-003	FW Header to Steam Generators RC-H-1A & RC-H-1B
ID-ISI-FW-004	FW System Hanger Details
NUCLEAR SERVICES CLOSED CYCLE COOLING WATER SYSTEM (NS)	
ID-ISI-RR-001	Emergency Cooling Water to RB Emergency Coolers
ID-ISI-RR-002	Emergency Cooling Water to RB Emergency Coolers
ID-ISI-RR-003	Emergency Cooling Water to Inside Reactor Building
ID-ISI-RR-004	Emergency Cooling Water From RB Emergency Coolers
ID-541-23 Series	NS Piping Analysis (Class 3 Supports)
ID-ISI-RB-001	Reactor Building Normal Cooling
ID-ISI-XX-002	Penetration Details
REACTOR BUILDING SPRAY SYSTEM (BS)	
ID-ISI-BS-001	Reactor Building Spray System Spray Pump Suction
ID-ISI-BS-002	Reactor Building Spray System Spray Pump Discharge

TABLE 2.5-1 (CONT.)
TMI UNIT 1 ISI ISOMETRIC AND COMPONENT DRAWINGS

DRAWING NUMBER	TITLE
MAKEUP AND PURIFICATION SYSTEM (LETDOWN PORTION) (MU)	
ID-ISI-MU-001	Makeup & Purification System Letdown Cooler Room
ID-ISI-MU-002	Makeup & Purification System Details
ID-ISI-MU-003	Makeup & Purification System Letdown Cooler Discharge
ID-ISI-MU-004	Makeup & Purification System Letdown Cooler Inlet
ID-ISI-MU-005	MU System Seal No. 1 By-Pass & Leak-Off
ID-ISI-MU-006	MU System Seal No. 1 By-Pass From Pump RC-P1D
ID-ISI-MU-007	MU System Seal No. 1 By-Pass From Pump RC-P1C
ID-ISI-MU-008	MU System Seal No. 1 By-Pass From Pump RC-P1A
ID-ISI-MU-009	MU System Seal No. 1 By-Pass From Pump RC-P1B
ID-ISI-MU-010	MU System Seal No. 1 Leak-Off From Pump RC-P1D
ID-ISI-MU-011	MU System Seal No. 1 Leak-Off From Pump RC-P1C
ID-ISI-MU-012	MU System Seal No. 1 Leak-Off From Pump RC-P1B
ID-ISI-MU-013	MU System Seal No. 1 Leak-Off From Pump RC-P1A
ID-ISI-MU-014	MU System Seal No. 1 Leak-Off From Pump RC-P1A
ID-ISI-MU-015	MU System Seal No. 1 Leak-Off From Pump RC-P1B
ID-ISI-MU-016	MU System Seal No. 1 Leak-Off From Pump RC-P1C
ID-ISI-MU-017	MU System Seal No. 1 Leak-Off From Pump RC-P1D
ID-ISI-MU-018	MU System Seal No. 1 By-Pass From Pump RC-P1A
ID-ISI-MU-019	MU System Seal No. 1 By-Pass From Pump RC-P1B
ID-ISI-MU-020	MU System Seal No. 1 By-Pass From Pump RC-P1C
ID-ISI-MU-021	MU System Seal No. 1 By-Pass From Pump RC-P1D
ID-ISI-MU-036	Letdown Cooler Detail

TABLE 2.5-1 (CONT.)
TMI UNIT 1 ISI ISOMETRIC AND COMPONENT DRAWINGS

DRAWING NUMBER	TITLE
MAKEUP AND PURIFICATION SYSTEM (MAKEUP PORTION) (MU)	
ID-ISI-MU-022	MU System Seal Injection to RC Pump RC-P1B
ID-ISI-MU-023	MU System Seal Injection to RC Pump RC-P1A
ID-ISI-MU-024	MU System Seal Injection to RC Pump RC-P1C
ID-ISI-MU-025	MU System Seal Injection to RC Pump RC-P1D
ID-ISI-MU-026	MU System Seal Injection to RC Pump RC-P1B
ID-ISI-MU-027	MU System Seal Injection to RC Pump RC-P1A
ID-ISI-MU-028	MU System Seal Injection to RC Pump RC-P1C
ID-ISI-MU-029	MU System Seal Injection to RC Pump RC-P1D
ID-ISI-MU-030	MU System Seal Injection to Pumps RC-P1A, B, C, & D
ID-ISI-MU-031	MU System High Pressure Injection From Penetrations 321, 322, & 323
ID-ISI-MU-032	MU System Hanger Details
ID-ISI-MU-033	MU System High Pressure Injection to "B" Loop
ID-ISI-MU-034	MU System High Pressure Injection to "A" Loop
ID-ISI-MU-035	Make Up Pump Suction
ID-ISI-MU-037	MU Hanger Details
ID-ISI-MU-038	Make Up Pumps Discharge
ID-ISI-MU-039	MU System Normal Make-up and Seal Injection Lines
ID-ISI-MU-040	High Pressure Injection to Reactor Coolant Loop A
ID-ISI-MU-041	High Pressure Injection to Reactor Coolant Loop B
ID-ISI-MU-042	Make Up Pumps Discharge Bypass Lines

TABLE 2.5-1 (CONT.)
TMI UNIT 1 ISI ISOMETRIC AND COMPONENT DRAWINGS

DRAWING NUMBER	TITLE
REACTOR COOLANT SYSTEM (RC)	
ID-ISI-RC-001	Reactor Coolant System OTSG "A" Loop
ID-ISI-RC-002	Reactor Coolant System OTSG "A" Loop Details
ID-ISI-RC-003	Reactor Coolant System OTSG "B" Loop
ID-ISI-RC-004	Reactor Coolant System OTSG "B" Loop Details
ID-ISI-RC-005	Reactor Coolant System Pressurizer Piping
ID-ISI-RC-006	Reactor Coolant Pumps RC-P1A & RC-P1B
ID-ISI-RC-007	Reactor Coolant Pumps RC-P1C & RC-P1D
ID-ISI-RC-008	Steam Generator RC-H1A Details
ID-ISI-RC-009	Steam Generator RC-H1B Details
ID-ISI-RC-010	Reactor Vessel RC-T1 Details
ID-ISI-RC-011	Control Rod Drive
ID-ISI-RC-012	Pressurizer RC-T2 Details
INTERMEDIATE COOLING SYSTEM (IC)	
ID-ISI-IC-001	IC System Inside Reactor Building Elevation 308'-0"
ID-ISI-IC-002	Intermediate Cooling From Penetration No. 302 Elevation 281'-0"
ID-ISI-IC-003	IC System Auxiliary Building From Penetration Nos. 333 & 334
ID-ISI-IC-004	IC Auxiliary Building From Penetration 302
ID-ISI-XX-002	Penetration Details
HYDROGEN PURGE SYSTEM AND MISCELLANEOUS PENETRATIONS (HP)	
ID-ISI-HP-001	Hydrogen Purge
ID-ISI-AH-001	Air Handling System
ID-ISI-AH-002	Air Handling System
ID-ISI-XX-002	Penetration Details

2.6 TMI Unit 1 Exempt ISI Class Components and Component Supports

The TMI Unit 1 ISI Class 1, Class 2, and Class 3 components that are exempt from examination are those which meet the criteria of Section XI, Subarticles IWB-1220, IWC-1220, IWD-1220, and IWF-1230. These components are shown on the ISI Boundary Sketches and color-coded accordingly.

2.7 Technical Approach and Positions

When the requirements of ASME Section XI are not easily interpreted, TMI Unit 1 has reviewed general licensing/regulatory requirements and industry practice to determine a practical method of implementing the Code requirements. The technical approach and position documents contained in this section have been provided to clarify TMI Unit 1's implementation of ASME Section XI requirements for inservice inspection and system pressure testing. An index which summarizes each technical approach/position is included in Tables 2.7-1 and 2.7-2. This section is reserved for site-specific issues. Corporate policy statements will be tracked and maintained by the corporate staff.

TABLE 2.7-1
INSERVICE INSPECTION TECHNICAL APPROACH AND POSITIONS INDEX

Position Number	Revision Date	Status[1]	Description of Technical Approach
			None currently identified

TABLE 2.7-2
SYSTEM PRESSURE TESTING TECHNICAL APPROACH AND POSITIONS INDEX

Position Number	Revision Date	Status[1]	Description of Technical Approach
1	0		Code Required Pressure Tests

TECHNICAL APPROACH AND POSITION NUMBER: PT-01
REVISION 0
(Page 1 of 1)

COMPONENT IDENTIFICATION

ASME Class: Class 3
References: Unit 1 ISI Boundary Sketch ID-ISI-FD-010
Description: Code Required Test Procedure

CODE REQUIREMENT

Code required test pressures.

POSITION

The safety function of RR-V6 is to throttle closed to maintain 60 psig in the Reactor Building Emergency Cooling Coils. This is to ensure that pressure in the Reactor Building Emergency Cooling Coils is higher than Reactor Building design pressure such that any leaking radioactive vapor or liquid to pass into the cooling coils and from there into the river. During a previous hydrostatic test of the Reactor Building Emergency Cooling System, it was not possible to reach the required test pressure of 165 psig because seat leakage of RR-V6 was greater than the 30 gpm capacity of the hydrostatic test pump. RR-V6 is a 10" Fisher butterfly control valve. Surveillance Procedure (SP) 1303-11.9 verifies a 60 psig back pressure with one pump and then with two pumps running each refueling outage. RR-V6's seat leakage is not important for its safety function. RR-V6 is located very near the concrete floor in the Intermediate Building. From RR-V6, the piping goes underground to the Mechanical Draft Cooling Tower. There is no other shutoff valve downstream of RR-V6. Upstream of RR-V6 are the outlet valves outlet valves outside the Reactor Building, RR-V4A/B/C/D. These valves are tight closing gate valves and are considered shutoff valves. The 1995 Edition, 1996 Addenda of ASME Section XI, IWD-5222(e) states, "For open ended portions of discharge lines beyond the last shutoff valve in non-closed systems (e.g., service water systems), confirmation of adequate flow during system operation shall be acceptable in lieu of system hydrostatic test." RR-V6 does not need to be leak tight to fulfill its safety function and is not considered a shutoff valve. SP 1303-11.9 verifies accident design flow rate through the coolers (5340 gpm for RR-P1A/B.) It is concluded that this test along with the performance of a VT-2 leakage exam of the affected piping will assure that the pressure retaining capability, structural integrity and leaktightness of this piping is maintained.

This clarification is included to document our interpretation of the Code in considering RR-V4A/B/C/D as the first shutoff valve referenced in IWD-5222(e).

3.0 COMPONENT ISI PLAN

The TMI Unit 1 Component ISI Program Plan includes ASME Section XI nonexempt pressure retaining welds, pressure retaining bolting, welded attachments, pump casings, valve bodies, reactor vessel interior, reactor vessel welded core support structures, reactor vessel interior attachments, reactor vessel removable core support structures, and steam generator tubing of ISI Class 1, Class 2, and Class 3 components that meet the criteria of IWA-1300. These components are identified on the ISI Boundary Sketches listed in Section 2, Table 2.4-1. This ISI Program Plan also includes component augmented inservice inspection examinations specified by documents other than ASME Section XI.

3.1 TMI Unit 1 Nonexempt ISI Class Components

The TMI Unit 1 ISI Class 1, Class 2, and Class 3 components identified in P&IDs are those which do not meet the criteria of ASME Section XI, Subarticles IWB-1220, IWC-1220, and IWD-1220, respectively.

3.1.1 Identification of ISI Class 1, Class 2, and Class 3 Nonexempt Components

ISI Class 1, Class 2, and Class 3 components are identified on the ISI Isometric and Component Drawings listed in Section 2, Table 2.5-1. Welded attachments are identified by controlled TMI Unit 1 component support drawings.

3.2 TMI Unit 1 Exempt ISI Class Components

The TMI Unit 1 ISI Class 1, Class 2, and Class 3 components that are exempt from examination are those which meet the criteria of ASME Section XI, Subarticles IWB-1220, IWC-1220, and IWD-1220, respectively. Specifically, the following ASME Section XI exemptions were utilized in the development of the TMI Unit 1 Component ISI Program Plan.

3.2.1 ISI Class 1 Exempt Components[5]

<u>IWB-1220, Components Exempt from Examination</u> - The following components (or parts of components) are exempted from the volumetric and surface examination requirements of IWB-2500:

(a) components[1,2] that are connected to the reactor coolant system and part of the reactor coolant pressure boundary[3], and that are of such a size and shape so that upon postulated rupture the resulting flow of coolant from the reactor coolant system under normal plant operating conditions is within the capacity of makeup systems which are operable from on-site emergency power;

(b)(1) piping of NPS 1 and smaller, except for steam generator tubing;

(2) components and their connections in piping[4] of NPS 1 and smaller;

(c) reactor vessel head connections and associated piping, NPS 2 and smaller, made inaccessible by control rod drive penetrations.

NOTES:

1. Refer to 10 CFR 50, Section 50.55a, (c)(2), revised March 15, 1984.
2. The exemptions from examination in IWC-1220 may be applied to those components permitted to be Class 2 in lieu of Class 1 by the regulatory authority having jurisdiction at the plant site.
3. Reactor coolant pressure boundary is defined in 10 CFR 50, Section 50.2(v); revised January 1, 1975.
4. In piping is defined as having one inlet and one outlet pipe, each of which shall be NPS 1 or smaller.
5. Reference IWB-1220, 1989 Edition, Section XI per 10 CFR 50.55a(b)(2)(xi)

3.2.2 ISI Class 2 Exempt Components

IWC-1220, Components Exempt from Examination – The following components or parts of components are exempted from the volumetric and surface examination requirements of IWC-2500:

IWC-1221, Components Within RHR, ECC, and CHR Systems or Portions of Systems

(a) For systems, except high pressure safety injection systems in pressurized water reactor plants:

(1) piping NPS 4 and smaller

(2) vessels, pumps, and valves and their connections in piping[2] NPS 4 and smaller

(b) For high pressure safety injection systems in pressurized water reactor plants:

(1) piping NPS 1½ and smaller

(2) vessels, pumps, and valves and their connections in piping[2] NPS 1½ and smaller

(c) Vessels, piping, pumps, valves, other components, and component connections of any size in statically pressurized, passive (i.e., no pumps) safety injection systems[3] of pressurized water reactor plants.

(d) Piping and other components of any size beyond the last shutoff valve in open-ended portions of systems that do not contain water during normal plant operating conditions.

IWC-1222, Components Within Systems or Portions of Systems Other Than RHR, ECC, and CHR Systems[1]

(a) Piping NPS 4 and smaller

(b) Vessels, pumps, and valves and their connections in piping[2] NPS 4 and smaller.

(c) Vessels, piping, pumps, valves, other components, and component connections of any size in systems or portions of systems that operate (when the system function is required) at a pressure equal to or less than 275 psig and at a temperature equal to or less than 200°F.

(d) Piping and other components of any size beyond the last shutoff valve in open-ended portions of systems that do not contain water during normal plant operating conditions.

IWC-1223, Inaccessible Welds

Welds or portions of welds that are inaccessible due to being encased in concrete, buried underground, located inside a penetration, or encapsulated by guard pipe.

NOTES:

1. RHR, ECC, and CHR systems are the Residual Heat Removal, Emergency Core Cooling, and Containment Heat Removal Systems, respectively.

2. In piping is defined as having a cumulative inlet and a cumulative outlet pipe cross-sectional area, neither of which exceeds the nominal OD cross-sectional area of the designated size.

3. Statically pressurized, passive safety injection systems of pressurized water reactor plants are typically called:

   (a) accumulator tank and associated system;

   (b) safety injection tank and associated system; and

   (c) core flooding tank and associated system

3.2.3 ISI Class 3 Exempt Components

IWD-1220, Components Exempt from Examination

The following components or parts of components are exempted from the VT-3 visual examination requirements of IWD-2500:

(a) for systems, except Auxiliary Feedwater Systems in pressurized water reactor plants:

   (1) piping NPS 4 and smaller; and

   (2) vessels, pumps, and valves and their connections in piping[1] NPS 4 and smaller

(b) for Auxiliary Feedwater Systems in pressurized water reactor plants:

   (1) piping NPS 1 and smaller;

   (2) vessels, pumps, and valves and their connections in piping[1] NPS 1 and smaller;

(c) components that operate at a pressure of 275 psig or less and at a temperature of 200°F or less in systems (or portions of systems) whose function is not required in support of reactor residual heat removal, containment heat removal, and emergency core cooling; and

(d) welds or portions of welds that are inaccessible due to being encased in concrete, buried underground, located inside a penetration, or encapsulated by guard pipe.

NOTE:
In piping is defined as having a cumulative inlet and cumulative outlet pipe cross-sectional area, neither of which exceeds the nominal OD cross-sectional area of the designated size.

3.3 Augmented Examination Requirements

Augmented examination requirements are those examinations that are performed above and beyond the requirements of ASME Section XI. Below is a summary of those examinations performed by TMI Unit 1 that are not specifically addressed by ASME Section XI, or the examinations that will be performed in addition to the requirements of the Code on a routine basis during the Third Inspection Interval.

3.3.1 USNRC Branch Technical Position MEB 3-1, "High Energy Fluid Systems, Protection Against Postulated Piping Failures in Fluid Systems Outside Containment," dated November 24, 1975.

Examinations of welds as a result of postulated break analysis performed for these locations.

Implementation of the examination commitments is included in Section 7.0 of this ISI Program Plan and the associated ISI database.

3.3.2 USNRC Regulatory Guide 1.14, Reactor Coolant Pump Flywheel Integrity

This Regulatory Guide includes inspection requirements for reactor coolant pump flywheels in Section 4. AmerGen has committed to these inspections per Technical Specifications Section 4.2.4.

Implementation of the examination commitments is included in Section 7.0 of this ISI Program Plan and the associated ISI database.

3.3.3 Augmented Examinations of Class 2 Decay Heat Removal, Reactor Building Spray, Makeup and Purification, and Spent Fuel Cooling—AmerGen commitment to perform volumetric examination of 7.5% of the nonexempt piping welds where piping wall thickness (< .375 inch) does not meet the minimum requirements for examination per Table IWC-2500-1, Category C-F-1.

Implementation of the examination commitments is included in Section 7.0 of this ISI Program Plan and the associated ISI database.

3.3.4 TMI Technical Specification Section 4.15, Main Steam Inservice Inspection.

Requires examinations of Main Steam welds based on calculations in which postulated failure would produce pressures in excess of compartment wall and/or slab capacities.

Implementation of the examination commitments is included in Section 7.0 of this ISI Program Plan and the associated ISI database.

3.4 ASME Section XI Code Cases Utilized

The alternate rules of the Code Cases listed in Regulatory Guide 1.147 may be used during the course of examinations performed in the Third Inspection Interval. Also, other Code Cases not listed in the Regulatory Guide that have been approved for use through Relief Requests (see Section 8.0) will be implemented in the Third Interval Program. The following is a summary of Code Cases that will be applied to weld components at TMI Unit 1 during the Third Inspection Interval.

3.4.1 Examination coverage for Class 1 and Class 2 welds will be in accordance with Code Case N-460 as allowed by Regulatory Guide 1.147, Revision 12.

3.4.2 Alternative rules for repair of Class1, Class 2, and Class 3 austenitic stainless steel piping in accordance with Code Case N-504-1 as allowed by Regulatory Guide 1.147, Revision 12.

3.4.3 Evaluation criteria for temporary acceptance of flaws in Class 3 piping in accordance with Code Case N-513 as approved for use by 10 CFR 50.55a.

3.4.4 Mechanical clamping devices for Class 2 and Class 3 piping in accordance with Code Case N-523-1 as approved for use by 10 CFR 50.55a.

3.5 Requests for Relief from ASME Section XI Requirements

In accordance with 10 CFR 50.55a(g)(5), there are areas that have been identified where ASME Section XI code requirements are impractical at TMI Unit 1. As a result, relief has been requested from certain code requirements and alternative methods and/or rules have been established.

3.5.1 Component Requests for Relief not addressing Code Case utilization include:

RR No.	Subject
RR-00-01	Examination of Pipe Welds Located Inside Reactor Vessel Primary Shield Wall
RR-00-02	Examination of Steam Generator Welded Attachments
RR-00-03	Examination of Letdown Cooler Manifold Welds
RR-00-04	Examination of Decay Heat Removal Cooler Nozzle Welds
RR-00-05	Examination of Decay Heat Removal Cooler Shell to Retaining Ring Welds
RR-00-06	Examination of the Reactor Vessel Support Skirt
RR-00-13	Alternative Requirements to Required Percentages of Examinations
Alternative No. VIII-3	Category B-J Piping Welds Examined From Inside Surface (PDI)
Alternative No. VIII-1	Alternative Depth Sizing Criteria (PDI)
Alternative No. VIII-2	Annual Ultrasonic Training (PDI)

4.0 COMPONENT SUPPORT ISI PROGRAM PLAN

The TMI Unit 1 Component Support Program includes the supports of Section XI nonexempt ISI Class 1, Class 2, and Class 3 components as described in Section 3.0.

4.1 TMI Unit 1 Nonexempt ISI Class Component Supports

The TMI Unit 1 ISI Class 1, Class 2, and Class 3 nonexempt component supports are those which do not meet the criteria of ASME Section XI, Subarticle IWF-1230. A summary of TMI Unit 1 ASME Section XI nonexempt component supports is included in Section 7.0.

4.1.1 Identification of ISI Class 1, Class 2, and Class 3 Nonexempt Component Supports

ISI Class 1, Class 2, and Class 3 component supports are identified on the ISI Isometrics and Component Drawings listed in Section 2, Table 2.5-1. Supports are identified by controlled TMI Unit 1 component support drawings.

4.2 TMI Unit 1 Exempt ISI Class Component Supports

The TMI Unit 1 Class 1, Class 2, and Class 3 component supports that are exempt from examination are those which meet the criteria of Subarticle IWF-1230. Specifically, the following ASME Section XI exemptions were utilized in the development of the TMI Unit 1 ISI Program Plan for component supports.

4.2.1 ISI Class 1, Class 2, and Class 3 Exempt Component Supports

A. <u>IWF, Supports Exempt from Examination</u>

Supports exempt from the examination requirements of IWF-2000 are those connected to piping and other items exempted from volumetric, surface, or VT-1 or VT-3 visual examination by IWB-1220, IWC-1220, IWD-1220, and IWE-1220. In addition, portions of supports that are inaccessible by being encased in concrete, buried underground, or encapsulated by guard pipe are also exempt from the examination requirements of IWF-2000.

4.3 Augmented Examination Requirements

4.3.1 Currently, no component support augmented inservice inspection requirements are included in the TMI Unit 1 ISI Program Plan.

4.4 ASME Section XI Code Cases Utilized

4.4.1 Currently, no Code Cases are utilized in the TMI Unit 1 ISI Program Plan for component supports.

4.5 Requests for Relief from ASME Section XI Requirements

4.5.1 Currently, no Relief Requests are utilized in the TMI Unit 1 ISI Program Plan for component supports.

4.6 Snubber Examination and Testing Requirements

4.6.1 ASME Section XI paragraphs IWF-5200(a) and IWF-5300(a) require VT-3 visual examination of snubbers to be performed in accordance with the OMa-1988 Addenda to ASME/ANSI OM-1987, Part 4 using the VT-3 visual examination method as described in IWA-2213.

4.6.2 ASME Section XI paragraphs IWF-5200(b) and IWF-5300(b) require inservice tests of snubbers to be performed in accordance with the OMa-1988 Addenda to ASME/ANSI OM-1987, Part 4. TMI Unit 1 functionally tests safety-related snubbers per Technical Requirements Manual, Section 4.17. TMI Unit 1 has determined that the Technical Requirements Manual Testing Program meets the requirements of the addenda to OM-1987, Part 4 and thus the requirements of Section XI.

4.6.3 ASME Section XI paragraphs IWF-5200(c) and IWF-5300(c) require integral and nonintegral attachments for snubbers to be examined in accordance with subsection IWF of the Code. This results in VT-3 visual examination of the snubber attachment hardware including lugs, bolting, pins, and clamps.

5.0 SYSTEM PRESSURE TESTING ISI PLAN

The TMI Unit 1 Pressure Testing (SPT) Program includes all pressure retaining nonexempt and exempt Section XI, ISI Class 1, Class 2, and Class 3 components, with the exception of those specifically excluded by Articles IWA-, IWB-, IWC-, and IWD-5000, and Table IWB-2500-1, Category B-P; Table IWC-2500-1, Category C-H; and Table IWD-2500-1, Category D-B.

The SPT Program performs system pressure tests and visual inspections (VT-2) on the ISI Class 1, Class 2, and Class 3 pressure retaining components to verify system and component structural integrity. This program conducts periodic pressure tests at refueling outage or inspection period frequencies. In addition to the ASME Section XI requirements, TMI Unit 1's SPT Program Plan also includes augmented examination commitments.

All components subject to ASME Section XI System Pressure Testing and Augmented Pressure Testing are shown on the color-coded ISI Boundary Sketches listed in Section 2, Table 2.4-1.

5.1 Augmented Pressure Testing Requirements

Augmented pressure testing examinations are those examinations that are performed above and beyond the requirements of ASME Section XI. Below is a summary of those examinations performed by TMI Unit 1 that are not specifically addressed by ASME Section XI, or the examinations that will be performed in addition to the requirements of the Code on a routine basis during the Third Inspection Interval.

5.1.1 Generic Letter 88-05, Boric Acid Corrosion of Carbon Steel Reactor Pressure Boundary Components in PWR Plants

The Nuclear Regulatory Commission issued Generic Letter (GL) 88-05 to all licensees of operating Pressurized Water Reactors (PWR) in March, 1988. This Generic Letter deals with boric acid corrosion of carbon steel reactor coolant pressure boundary components in PWR plants. Specifically, GL 88-05 requested information to assess safe operation of PWR's when reactor coolant leaks below Tech Spec limits develop and the coolant containing boric acid comes in contact with and degrades low alloy carbon steel components. TMI Unit 1's response to GL 88-05 requirements are incorporated through the completion of normal station operator walkdowns, heightened Maintenance and System Engineering training, the normal Inservice Inspection Program, and the Section XI System Pressure Testing Program.
To ensure compliance with this augmented commitment, the Reactor Coolant Pressure Boundary (RCPB), as defined by FSAR, shall have a system inspection

performed by certified VT-2 examiners every refueling outage consisting of a pre-outage visual examination as well as a visual examination conducted to identify evidence of boric acid crystallization and residue accumulations.

5.2 ASME Section XI Code Cases Utilized

The alternate rules of the Code Cases listed in Regulatory Guide 1.147 may be used during the course of examinations performed in the Third Inspection Interval. Also, other Code Cases not listed in the Regulatory Guide that have been approved for use through Relief Requests (see Section 8.0) will be implemented in the Third Interval Program. The following is a summary of Code Cases that will be applied to pressure testing at TMI Unit 1 during the Third Inspection Interval.

5.2.1 System pressure testing of welded Repairs and Replacements of Class 1, Class 2, and Class 3 components will be performed per Code Case N-416-1 as allowed by Regulatory Guide 1.147, Revision 12.

5.2.2 Alternate system pressure testing requirements of Class 2 containment components (those attached to nonclassed piping which is outside the scope of Section XI) may be performed in accordance with Code Case N-522 as allowed by Regulatory Guide 1.147, Revision 12.

5.3 Requests for Relief from ASME Section XI Requirements

In accordance with 10 CFR 50.55a(g)(5), there are areas that have been identified where ASME Section XI code requirements are impractical at TMI Unit 1. As a result, relief has been requested from certain code requirements and alternative methods and/or rules have been established.

5.3.1 System Pressure Test Requests for Relief not addressing Code Case utilization include:

RR No.	Subject
RR-00-07	Alternative Requirements for Qualification of VT-2 Examination Personnel
RR-00-08	Removal of Insulation During System Pressure Tests (Ref. Borated Systems)
RR-00-09	Removal of Insulation at Pressurizer Heater Bundles (Ref. Borated Systems)
RR-00-10	VT-2 Pressure Test of Feedwater Piping at Less Than Nominal Pressure
RR-00-11	Proposed Actions for Bolt Removal at Leaking Connections
RR-00-12	Deletion of Class 3 Hydro Erroneously Included in Table IWB-2500-1

6.0 CONTAINMENT ISI PLAN

The Containment Inservice Inspection (CISI) Plan per IWE and IWL is not included in this document except for Relief Requests. The Relief Requests have been included for numbering, tracking, and submittal purposes. The program addressing inspection requirements for these subsections is maintained as a separate program document.

7.0 INSERVICE INSPECTION SUMMARY TABLES

The following Table 7.0-1 provides a summary of the ASME Section XI component, component support, and system pressure testing as well as augmented examinations and tests for Interval Three at TMI Unit 1. If a particular Category and Item Number does not apply to TMI Unit 1, it is not included in this table.

The format of the Inservice Inspection Summary Tables is as depicted below and provides the following information:

Examination Category	Item Number	Description	Exam Requirements	Total Number of Components by System	Relief Request/ TA&P Number	Notes
(1)	(2)	(3)	(4)	(5)	(6)	(7)

(1) Examination Category and Examination Category Description:

Provides the examination category and description as identified in ASME Section XI, Tables IWB-2500-1, IWC-2500-1, IWD-2500-1, and IWF-2500-1. Only those examination categories applicable to TMI Unit 1 are identified.

In addition to the ASME Section XI Categories, Category "N/A" was developed to identify Augmented ISI examinations and other TMI Unit 1 commitments.

(2) Item Number:

Provides the item number as identified in ASME Section XI, Tables IWB-2500-1, IWC-2500-1, IWD-2500-1, and IWF-2500-1. Only those item numbers applicable to TMI Unit 1 are identified.

(3) Item Number Description:

Provides the description as identified in ASME Section XI, Tables IWB-2500-1, IWC-2500-1, IWD-2500-1, and IWF-2500-1.

(4) Exam Requirements:

Provides the examination method(s) required by ASME Section XI, Tables IWB-2500-1, IWC-2500-1, IWD-2500-1, and IWF-2500-1.

(5) Total Number Of Components by System

Provides the system designator (abbreviations). See Section 2, Table 2.4-1 for an explanation of these system abbreviation designators.

This column also provides the number of components within a particular system for that Item Number.

(6) Relief Request/TA&P Number

Provides a listing of Relief Request/Technical Approach & Position (TA&P) numbers applicable to the ASME Section XI Item Number. If a Relief Request/ TA&P number is identified, see the corresponding Relief Request in Section 8.0 or the technical approach and position in Section 2.7. If a Relief Request/TA&P Number is generic to all components, the Number is not listed in these tables.

(7) Notes

Provides a listing of program notes applicable to the ASME Section XI Item Number. If a program note number is identified, see the corresponding program note in Section 9.0.

THREE MILE ISLAND UNIT 1
INSERVICE INSPECTION SUMMARY TABLE 7.0-1

Examination Category	Item Number	Description	Exam Requirements	Total Number of Components by System	Relief Request/ TA&P Number	Notes
B-A Pressure Retaining Welds in Reactor Vessel	B1.11	Circumferential Shell Welds, Reactor Vessel	Volumetric	4	Alt. VIII-1	
	B1.12	Longitudinal Shell Welds	Volumetric	4	Alt. VIII-1	
	B1.21	Circumferential Head Welds, Reactor Vessel	Volumetric	1	Alt. VIII-1	
	B1.30	Shell-to-Flange Weld, Reactor Vessel	Volumetric	1	Alt. VIII-1	
	B1.40	Head-to-Flange Weld, Reactor Vessel	Volumetric & Surface	1	Alt. VIII-1	
	B1.51	Beltline Region Repair Welds, Reactor Vessel	Volumetric	1	Alt. VIII-1	
B-B Pressure Retaining Welds in Vessels Other Than Reactor Vessels	B2.11	Circumferential Shell-To-Head Welds, Pressurizer	Volumetric	2		
	B2.12	Longitudinal Shell-To-Head Welds, Pressurizer	Volumetric	3		
	B2.40	Tube Sheet-To-Head Weld, Steam Generator	Volumetric	4		
	B2.70	Longitudinal Welds, Heat Exchanger	Volumetric	MU:8	RR-00-03	
B-D Full Penetration Welds of Nozzles in Vessels	B3.90	Nozzle-to-Vessel Welds, Reactor Vessel	Volumetric	8		
	B3.100	Nozzle Inside Radius Section, Reactor Vessel	Volumetric	8		
	B3.110	Nozzle-to-Vessel Welds, Pressurizer	Volumetric	5		
	B3.120	Nozzle Inside Radius Section, Pressurizer	Volumetric	5		
	B3.130	Nozzle To Vessel Welds, Steam Generator	Volumetric	6		
	B3.140	Nozzle Inside Radius Section, Steam Generator	Volumetric	6		
B-F Pressure Retaining Dissimilar Metal Welds in Vessel Nozzles	B5.10	Dissimilar Metal Nozzle-to-Safe End Butt Welds NPS 4" or Larger, Reactor Vessel	Volumetric & Surface	2	RR-00-01	
	B5.40	Dissimilar Metal Nozzle-to-Safe End Butt Welds NPS 4" or Larger, Pressurizer	Volumetric & Surface	2		
	B5.50	Dissimilar Metal Nozzle-to-Safe End Butt Welds Less Than NPS 4", Pressurizer	Surface	3		
B-G-1 Pressure Retaining Bolting, Greater Than 2 in. In Diameter	B6.10	Reactor Vessel Closure Head Nuts	Visual, VT-1	60		
	B6.30	Reactor Vessel Closure Studs, when Removed	Volumetric & Surface	60		
	B6.40	Threads in Reactor Vessel Flange	Volumetric	60		
	B6.50	Reactor Vessel Closure Washers	Visual, VT-1	120		
	B6.60	Pressurizer Studs	Volumetric	12		
	B6.70	Pressurizer Flange Surface When Disassembled	Visual, VT-1	12		

THREE MILE ISLAND UNIT 1
INSERVICE INSPECTION SUMMARY TABLE 7.0-1 (CONT.)

Examination Category	Item Number	Description	Exam Requirements	Total Number of Components by System	Relief Request/ TA&P Number	Notes
B-G-1 Pressure Retaining Bolting, Greater Than 2 in. In Diameter (Cont.)	B6.80	Pressurizer Nuts	Visual, VT-1	12		
	B6.180	Bolts & Studs in Pumps	Volumetric	RC:4		7
	B6.190	Flange Surface, When Disassembled, in Pumps	Visual, VT-1	RC:4		
B-G-2 Pressure Retaining Bolting, 2 in. and Less In Diameter	B7.20	Bolts, Studs, & Nuts in Pressurizer	Visual, VT-1	7		
	B7.30	Bolts, Studs, & Nuts in Steam Generator	Visual, VT-1	4		
	B7.50	Bolts, Studs, & Nuts in Piping	Visual, VT-1	MU:4		
				RC:4		
	B7.60	Bolts, Studs, & Nuts in Pumps	Visual, VT-1	RC:4		
	B7.70	Bolts, Studs, & Nuts in Valves	Visual, VT-1	CF:4		
				MU:1		
				RC:3		
B-J Pressure Retaining Welds in Piping	B9.11	Circumferential Welds in Piping NPS 4 or Larger	Volumetric & Surface	CF:24	RR-00-01 Alt. VIII-3	
				DH:21		
				RC:117	RR-00-01 Alt. VIII-3	
	B9.21	Circumferential Welds in Piping Less than NPS 4	Surface	MU:266		8
				RC:93		
	B9.31	Branch Pipe Connection Welds NPS 4 or Larger	Volumetric & Surface	RC:2		
	B9.32	Branch Pipe Connection Welds Less than NPS 4	Surface	RC:9		
	B9.40	Socket Welds	Surface	MU:339		
				RC:22		
B-K Welded Attachments For Vessels, Piping, Pumps, and Valves	B10.10	Welded Attachments, Pressure Vessels	Surface	PRES:8		
				OTSG:2	RR-00-02	
	B10.20	Welded Attachments, Piping	Surface	CF:2		
				DH:1		

THREE MILE ISLAND UNIT 1
INSERVICE INSPECTION SUMMARY TABLE 7.0-1 (CONT.)

Examination Category	Item Number	Description	Exam Requirements	Total Number of Components by System	Relief Request/ TA&P Number	Notes
B-K (Cont.)	B10.30	Welded Attachments, Pumps	Surface	RC:4		
B-L-2 Pump Casings	B12.20	Pump Casing, Internal Surface	Visual, VT-3	RC:4		6
B-M-1 Valve Bodies	B12.30	Valve Body Welds Less Than 4" NPS	Surface	Pressurizer:1 PORV		4
B-M-2 Valve Bodies	B12.50	Valve Bodies, Exceeding NPS 4	Visual, VT-3	CF:4		
				DH:2		
B-N-1 Interior of Reactor Vessel	B13.10	Vessel Interior	Visual, VT-3	1		
B-N-2 Welded Core Support Structures and Interior Attachment to Reactor Vessels	B13.50	Interior Attachments Within Beltline Region in Reactor Vessel	Visual, VT-1	12		
B-N-3 Removable Core Support Structures	B13.70	Core Support Structure in Reactor Vessel	Visual, VT-3	1		
B-O Pressure Retaining Welds in Control Rod Housings	B14.10	Welds in CRD Housing	Volumetric or Surface	69		
B-P All Pressure Retaining Components (Periodic)	B15.10	RPV – System Leakage Test	Visual, VT-2	RC		
	B15.20	Pressurizer – System Leakage Test		CF		
	B15.30	Steam Generator – System Leakage Test		DH		
	B15.50	Piping – System Leakage Test		MU		
	B15.60	Pumps – System Leakage Test				
	B15.70	Valves – System Leakage Test				
B-Q Steam Generator Tubing	B16.10	Steam Generator Tubing in Straight Tube Design	Volumetric Per Tech Specs	2		

THREE MILE ISLAND UNIT 1
INSERVICE INSPECTION SUMMARY TABLE 7.0-1 (CONT.)

Examination Category	Item Number	Description	Exam Requirements	Total Number of Components by System	Relief Request/ TA&P Number	Notes
C-A Pressure Retaining Welds In Pressure Vessels	C1.10	Shell Circumferential Welds	Volumetric	DH:2 Coolers	RR-00-05	5
				RC:8 OTSG		
	C1.20	Head Circumferential Welds	Volumetric	DH:2		
	C1.30	Tubesheet-to-Shell-Weld Welds	Volumetric	RC:4 OTSG		
C-B Pressure Retaining Nozzle Welds in Vessels	C2.21	Nozzle-to-Shell (or Head) Welds in Vessels without Reinforcing Plate, Greater than ½" Nominal Thickness	Volumetric & Surface	RC:4 OTSG		
	C2.22	Nozzle Inside Radius Section in Vessels without Reinforcing Plate, Greater than ½" Nominal Thickness	Volumetric	RC:4 OTSG		
	C2.31	Reinforcing Plate Welds to Nozzle and Vessel, in Vessels with Reinforcing Plate Greater Than ½" Nominal Thickness	Surface	DH:4		
	C2.32	Nozzle-to-Shell (or Head) Welds when inside of Vessel is Accessible in Vessels with Reinforcing Plate Greater Than ½" Nominal Thickness	Volumetric	DH:4	RR-00-04	
	C2.33	Nozzle-to-Shell (or Head) Welds when inside of Vessel is Inaccessible in Vessels with Reinforcing Plate Greater Than ½" Nominal Thickness	Visual, VT-2	DH:4		
C-C Welded Attachments For Vessels, Piping, Pumps, and Valves	C3.20	Welded Attachments to Piping	Surface	DH:13		
				EF:3		
				FW:29		
				HP:1		
				MS:7		
				MU:4		
				RBECS:28		
C-F-1 Pressure Retaining Welds In Austenitic Stainless Steel or High Alloy Piping	C5.11	Circumferential Welds in Austenitic Stainless Steel or High Alloy Piping ≥3/8" Nominal Wall Thickness for Piping > NPS 4	Volumetric & Surface	BS:111		2
				DH:373		
				EF:8		
				MU:69		

THREE MILE ISLAND UNIT 1
INSERVICE INSPECTION SUMMARY TABLE 7.0-1 (CONT.)

Examination Category	Item Number	Description	Exam Requirements	Total Number of Components by System	Relief Request/ TA&P Number	Notes
C-F-1 Pressure Retaining Welds In Austenitic Stainless Steel or High Alloy Piping (Cont.)	C5.21	Circumferential Welds in Austenitic Stainless Steel or High Alloy Piping 1/5" Nominal Wall Thickness for Piping ≥2 and ≤4 NPS	Volumetric & Surface	MU:246		
	C5.30	Socket Welds	Surface	MU:56		
	C5.41	Pipe Branch Connections of Branch Piping NPS ≥2, Circumferential Weld	Surface	RBS:2		
				DH:4		
				MU:5		
C-F-2 Pressure Retaining Welds In Carbon or Low Alloy Steel Piping	C5.51	Circumferential Welds in Carbon or Low Alloy Steel Piping ≥3/8" Nominal Wall Thickness for Piping >NPS 4	Volumetric & Surface	EF:133		
				FW:90		
				MS:180		
				RBECS:151		
	C5.70	Socket Welds in Carbon or Low Alloy Steel Piping	Surface	RBECS:12		
	C5.81	Pipe Branch Connections of Branch Piping NPS ≥2, Circumferential Weld	Surface	MS:26		
				RBECS:12		
C-H All Pressure Retaining Components (Periodic)	C7.10	Pressure Vessels – System Leakage Test	Visual, VT-2	MS		
	C7.30	Piping – System Leakage Test		CF		
	C7.50	Pumps – System Leakage Test		DH		
	C7.70	Valves – System Leakage Test		EF	RR-00-10	
				NS		
				BS		
				MU		
				RC		
				IC		
				HP		
D-A Welded Attachments For Vessels, Piping Pumps, and Valves	D1.10	Pressure Vessel Welded Attachments	Visual, VT-1	CS:2		
				DH:4		
				NS:4		
				RW:7		

THREE MILE ISLAND UNIT 1
INSERVICE INSPECTION SUMMARY TABLE 7.0-1 (CONT.)

Examination Category	Item Number	Description	Exam Requirements	Total Number of Components by System	Relief Request/ TA&P Number	Notes
D-A Welded Attachments For Vessels, Piping Pumps, and Valves (Cont.)	D1.20	Piping Welded Attachments	Visual, VT-1	CS:4		
				DC:20		
				EF:20		
				MS:6		
				NS:34		
				RW:31		
D-B All Pressure Retaining Components	D2.10	Pressure Vessels, System Leakage Test	Visual, VT-2	MS	RR-00-12	
	D2.30	Piping, System Leakage Test		RW	RR-00-12	
	D2.50	Pumps, System Leakage Test		DH	RR-00-12	
	D2.70	Valves, System Leakage Test		CO	RR-00-12	
				EF	RR-00-12	
				NS	RR-00-12	
				CH	RR-00-12	
				MU	RR-00-12	
				SF	RR-00-12	
				IC	RR-00-12	
				CA	RR-00-12	
F-A Component Supports	F1.10	Class 1 Piping Supports	Visual, VT-3	CF:10		1
				DH:7		
				MU:197		
				RC:37		
	F1.20	Class 2 Piping Supports	Visual, VT-3	DH:123		1
				EF:69		
				FW:47		
				HP:2		
				MS:114		
				MU:102		
				RBECW:92		
				BS:34		

THREE MILE ISLAND UNIT 1
INSERVICE INSPECTION SUMMARY TABLE 7.0-1 (CONT.)

Examination Category	Item Number	Description	Exam Requirements	Total Number of Components by System	Relief Request/ TA&P Number	Notes
F-A Component Supports (Cont.)	F1.30	Class 3 Piping Supports	Visual, VT-3	CO:14		1
				DC:60		
				EF:61		
				NS:165		
				MS:14		
				RW:99		
	F1.40	Supports Other Than Piping Supports (Class 1, Class 2, & Class 3)	Visual, VT-3	CO:2		1
				DC:4		
				DH:4		
				EF:9		
				MS:10		
				MU:7		
				NS:7		
				RC:66		
				RW:15		
				RV:1	RR-00-06	
N/A Augmented Components	3.6.2	Examination of High Energy Circumferential & Longitudinal Piping Welds (MEB 3-1, FSAR 3.6.1 & 3.6.2)	Volumetric or Surface	FW:2		
	RG1.14	Augmented Examination of Reactor Coolant Pump Flywheel per Regulatory Guide 1.14	Volumetric, Surface & Visual	RC:4		
	GL8805	Generic Letter 88-05, Boric Acid Corrosion of Carbon Steel Reactor Pressure Boundary Components in PWR Plants	Visual, VT-2		RR-00-08 RR-00-09	
	TS4.1.5	Technical Specification Section 4.1.5 Examination	Volumetric	MS:4		3
	NUREG 0612	Examination of Load Bearing Welds per NUREG 0612 Control of Heavy Loads	Surface & Visual	Tripod:1		
		Class 2, Decay Heat Removal Reactor Building Spray Makeup and Purification Spent Fuel Cooling	Volumetric & Surface	DH:		2
				BS:		
				MU:		
				SF:		

8.0 RELIEF REQUESTS FROM ASME SECTION XI

This section contains Relief Requests written per 10 CFR 50.55a(a)(3)(i) for situations where alternatives to ASME Section XI requirements provide an acceptable level of quality and safety; per 10 CFR 50.55a(a)(3)(ii) for situations where compliance with ASME Section XI requirements results in a hardship or an unusual difficulty without a compensating increase in the level of quality and safety; and per 10 CFR 50.55a(g)(5)(iii) for situations where ASME Section XI requirements are considered impractical.

The following NRC guidance was utilized to determine the correct 10 CFR 50.55a paragraph citing for TMI Unit 1 relief requests. 10 CFR 50.55a(a)(3)(i) and 10 CFR 50.55a(a)(3)(ii) provide alternatives to the requirements of Section XI, while 10 CFR 50.55a(g)(5)(iii) recognizes situational impracticalities.

10 CFR 50.55a(a)(3)(i): Cited in Relief Requests when alternatives to the ASME Section XI requirements which provide an acceptable level of quality and safety are proposed. Examples are Relief Requests, which propose alternative NDE methods and/or examination frequency.

10 CFR 50.55a(a)(3)(ii): Cited in Relief Requests when compliance with the ASME Section XI requirements is deemed to be a hardship or unusual difficulty without a compensating increase in the level of quality and safety. Examples of hardship and/or unusual difficulty include, but are not limited to, excessive radiation exposure, disassembly of components solely to provide access for examinations, and development of sophisticated tooling that would result in only minimal increases in examination coverage.

10 CFR 50.55a(g)(5)(iii): Cited in Relief Requests when conformance with ASME Section XI requirements is deemed impractical. Examples of impractical requirements are situations where the component would have to be redesigned, or replaced to enable the required inspection to be performed.

An index for TMI Unit 1 Relief Requests is included in Table 8.0.

The following Relief Requests are subject to change throughout the inspection interval.

TABLE 8.0
RELIEF REQUEST INDEX

Relief Request	Status[2]	Description Of Relief Request/ NRC Approval Summary[1]
RR-00-01	Drafted	Examination of Pipe Welds Located Inside Reactor Vessel Primary Shield Wall
RR-00-02	Drafted	Examination of Steam Generator Welded Attachment Welds
RR-00-03	Drafted	Examination of Letdown Cooler Manifold Welds
RR-00-04	Drafted	Examination of Decay Heat Removal Cooler Nozzle Welds
RR-00-05	Drafted	Examination of Decay Heat Removal Cooler Shell to Retaining Ring Welds
RR-00-06	Drafted	Examination of the Reactor Vessel Support Skirt
RR-00-07	Drafted	Alternative Requirements for Qualification of VT-2 Examination Personnel
RR-00-08	Drafted	Removal of Insulation During System Pressure Tests (Ref Borated Systems)
RR-00-09	Drafted	Removal of Insulation at Pressurizer Heater Bundles (Ref Borated Systems)
RR-00-10	Drafted	VT-2 Pressure Test of Feedwater Piping at Less Than Nominal Pressure
RR-00-11	Drafted	Proposed Actions for Bolt Removal at Leaking Connections
RR-00-12	Drafted	Deletion of Class 3 Hydro Erroneously Included in Table IWB-2500-1
RR-00-13	Drafted	Alternative Requirements to Required Percentages of Examinations

TABLE 8.0 (CONT.)
RELIEF REQUEST INDEX

Relief Request	Status[2]	Description Of Relief Request/ NRC Approval Summary[1]
Alternative No. VIII-3	Drafted	Category B-J Piping Welds Examined From Inside Surface (PDI)
Alternative No. VIII-1	Drafted	Alternative Depth Sizing Criteria (PDI)
Alternative No. VIII-2	Drafted	Annual Ultrasonic Training (PDI)
RR-1	Granted CISI	Subsection IWE, Examination Seals and Gaskets
RR-2	Granted CISI	Subsection IWE, Qualification of NDE Personnel
RR-3	Granted CISI	Subsection IWE, Preservice Examination of Reapplied Paint and Coatings
RR-4	Granted CISI	Subsection IWE, Examination Prior to Paint or Coating Removal
RR-5	Granted CISI	Subsection IWE, Successive Examination After Repair
RR-6	Granted CISI	Subsection IWE, Bolt Torque or Tension Testing
RR-7	Granted CISI	Subsection IWL, Visual Examination of Concrete Components
RR-8	Drafted CISI	Alternative to IWE Requirements for VT-1 Visual Examination of Bolted Connections

Note 1: The NRC grants Relief Requests pursuant to 10 CFR 50.55a(g)(6)(i) when Code requirements cannot be met and proposed alternatives do not meet the criteria of 10 CFR 50.55(a)(3). The NRC authorizes relief requests pursuant to 10 CFR 50.55a(a)(3)(i) if the proposed alternatives would provide an acceptable level of quality and safety or under (3)(ii) if compliance with the specified requirements would result in hardship or unusual difficulties without a compensating increase in the level of safety.

Note 2: Relief Request Status Options: Authorized – Approved for use in an NRC SER (See Note 1); Granted – Approved for use in an NRC SER (See Note 1); Authorized Conditionally – Approved for use in an NRC SER which imposes certain conditions; Granted Conditionally – Approved for use in an NRC SER which imposes certain conditions; Denied – Use denied in an NRC SER; Expired – Approval for relief has expired; Withdrawn – Relief has been withdrawn by the station; Not Required – The NRC has deemed the relief unnecessary in an SER or RAI; Cancelled – Relief has been cancelled by the station prior to issue; Drafted – Drafted relief awaiting submittal and/or pending approval; CISI – Relief is applicable to IWE/IWL requirements as documented in the Containment Inservice Inspection Plan.

9.0 INSERVICE INSPECTION PROGRAM NOTES

Inservice Inspection Program Notes provide TMI Unit 1 specific implementation practices for ISI requirements.

The ISI Program Notes Index provides a listing of program notes applicable to the ASME Section XI Item Number. If a program note number is identified, see the corresponding program note in Section 7.0, Table 7.0-1.

Table 9.0 provides the index and a summary of each note.

TABLE 9.0
ISI PROGRAM NOTES INDEX

Note #	Note Summary	Revision
1	ISI Snubber visual examinations performed in conjunction with the Tech Spec Snubber Program	0
2	Class 2 thin wall piping welds examined under Augmented Program	0
3	Welds required to be examined per Tech Spec 4.15.1	0
4	PORV weld examination	0
5	Cooler surface examination	0
6	Reactor Coolant Pump body visual examination	0
7	Volumetric examination Reactor Cooler Pump studs	0
8	Surface examinations per IWB-2500-1	0

NOTE 1

The number of TMI Unit 1 supports identified includes snubbers for the visual examination of the snubber per IWF-5200(a) and IWF-5300(a) and of the integral and nonintegral attachments per IWF-5200(c) and IWF-5300(c). The snubbers will be scheduled and administratively tracked in the ISI program; however, the Technical Specification Snubber Program will be the mechanism for actually performing the visual examinations scheduled within the ISI program.

For a detailed discussion of the snubber program, see Section 4.6.

NOTE 2

The number of TMI Unit 1 components identified does not include those welds in piping < 3/8" nominal wall thickness in accordance with Note 2 of Table IWC-2500-1, Category C-F-1. This note states that thin wall piping welds are not required to be inspected, but are to be included in the total weld count to which a 7.5% sampling rate is applied. However, TMI Unit 1 does examine these welds.

NOTE 3

These welds are required to be ultrasonically examined at 3-1/2 year intervals per Tech Spec 4.15.1. Basis Section of 4.15.1 states that these inspections have revealed no degradation of the welds has occurred during the inspection cycles up to and including 9R outage inspection. Consequently, as further degradation is not expected to occur, justification to extend the inspection frequency to once every ten (10) years is being developed.

NOTE 4

There are two (2) PORV valves installed on a rotating basis. One of the valves is examined each ten (10) years.

NOTE 5

Perform surface examinations if the cooler is disassembled. See Relief Request RR-00-05.

NOTE 6

Perform visual examination of pump casing internal surface if disassembled. If none are disassembled, that statement must be reported on the end of interval NIS-1.

NOTE 7

Examinations are limited to components selected for examination under Examination Category B-L-2. Per Category B-L-2, examinations are limited to at least one pump in each group of pumps performing similar functions in the system, and examinations are required only when a pump is disassembled for maintenance, repair, or volumetric examination. (Ref. Interpretation XI-1-98-22)

NOTE 8

Per 10 CFR 50a(g)(4)(iii) surface examinations of High Pressure Safety Injection Systems specified in Table IWB-2500-1, Examination Category B-J, Item Number B9.21 are not required.

10.0 REFERENCES

The references used to develop this In-service Inspection Program Plan include:

1) Code of Federal Regulations, Title 10, Part 50, Paragraph 50.55a, "Codes and Standards."

2) ASME Boiler and Pressure Vessel Code, Section XI, Division 1, "Inservice Inspection of Nuclear Power Plant Components," the 1995 Edition, 1996 Addenda.

3) ASME Boiler and Pressure Vessel Code, Section III, Division 1, "Rules For Construction of Nuclear Power Plant Components," the 1995 Edition, 1996 Addenda.

4) USAS B31.1.0-1967, "Power Piping."

5) Regulatory Guide 1.26, Revision 3, "Quality Group Classifications and Standards for Water-, Steam-, and Radioactive Waste- Containing Components of Nuclear Power Plants."

6) Code of Federal Regulations, Title 10, Part 50, Paragraph 2, "Definitions," the definition of "Reactor Coolant Pressure Boundary."

7) TMI Unit 1, Final Safety Analysis Report.

8) TMI Unit 1, Technical Specifications.

9) USNRC NUREG 0737, dated November 1980, "Clarification of TMI Action Plan Requirements."

10) TMI Unit 1 ISI Classification Basis Document, Third Ten-Year Inspection Interval.

11) Branch Technical Position MEB 3-1, dated November 24, 1975, "High Energy Fluid Systems, Protection Against Postulated Piping Failures in Fluid Systems Outside Containment."

12) Regulatory Guide 1.14, Revision 1, Reactor Coolant Pump Flywheel Integrity.

AmerGen Energy Company
Three Mile Island Unit 1
Third 10-Year Interval
Request for Relief RR-00-01

COMPONENT IDENTIFICATION

Code Class:	Class 1
Reference:	ASME, Section XI; 1995 Edition, 1996 Addenda; Table IWB-2500-1
Examination Categories:	B-F, B-J
Item Numbers:	B5.10, B9.11
Description:	Alternate requirements to surface examination of piping and nozzle to safe-end welds.
Component Numbers:	Core Flood System pipe to safe-end welds CF-0001 and CF-0020, Reactor Coolant System nozzle to pipe welds RC-0001, RC-0033, RC-0052, RC-0054, RC-0087, and RC-0106 and nozzle to safe-end welds RV-0009BM and RV-0010BM.

CODE REQUIREMENTS

ASME Code, Section XI, Rules for Inservice Inspection of Nuclear Power Plant Components, 1995 Edition with 1996 Addenda, Examination Category B-F, Item B5.10 and Examination Category B-J, Item B9.11 of IWB 2500, Table IWB-2500-1 require both surface examination of the weld and adjacent base metal exterior and volumetric examination of the weld and adjacent base metal (interior one-third volume) on all dissimilar metal nozzle to safe-end welds and terminal end piping welds at vessels.

CODE REQUIREMENTS FROM WHICH AN ALTERNATIVE IS REQUESTED

Relief is requested from the surface examination requirements of Table IWB-2500-1, Examination Category B-F, Item B5.10 and Examination Category B-J, Item B9.11.

BASIS FOR ALTERNATIVE

Pursuant to 10 CFR 50.55a(a)(3)(i), an alternative is requested on the basis that the proposed alternatives provide an acceptable level of quality and safety.

An alternative is requested to performing Code required surface examination of the welds identified by the component numbers above because the welds are located inside the reactor vessel primary shield wall and would require removal of sand plugs and insulation to gain access into this high radiation environment. AmerGen estimates that a cumulative exposure of 87 Person-Rem would be necessary to complete the Code required surface examinations. Additional labor costs would be incurred through the removal of the sand plugs and insulation, as compared with the alternative that provides an acceptable level of quality and safety, as discussed below.

The reactor vessel is of such design that ID ultrasonic examination of these welds is possible with minimal radiation exposure. An alternative for the surface examination is to perform an ultrasonic examination of the full weld volume and adjacent base metal ½ inch on each side of the weld from the ID using a qualified ultrasonic examination technique which has been demonstrated to be capable of detecting outer diameter surface connected defects in the circumferential orientation in a test block.

The qualification of the inspection technique was pursued generically by the Babcock and Wilcox Owner's Group (BWOG) and subsequently approved by the NRC staff in a letter dated March 21, 1996. In its letter, the NRC staff stated that licensees using BWOG topical report (BAW-2228P-A, Rev 1) for the basis for relief must confirm the plant-specific applicability by demonstrating that the input stresses under normal upset and emergency/faulted conditions for it's plant are the result of using the bounding transient in the analysis and the material in its inlet, outlet, and core flood nozzles is either A508 Class 2 low alloy steel or SA 336 (316) stainless steel. GPUN, the previous owner of TMI Unit 1, provided the conformation of this information to the NRC in a letter dated July 9, 1998. The NRC concurred with this conformation via letter dated November 24, 1998.

Relief was granted for use of this alternative examination by the NRC during the second inspection interval at TMI Unit 1.

PROPOSED ALTERNATIVE PROVISIONS

The welds identified in the component identification section will be ultrasonically examined for the full weld volume and adjacent base metal ½ inch on each side of the weld from the ID.

PERIOD FOR WHICH RELIEF IS REQUESTED

An alternative is requested for the third ten-year inspection interval of the Inservice Inspection Program for TMI Unit 1.

AmerGen Energy Company
Three Mile Island Unit 1
Third 10-Year Interval
Request for Relief RR-00-02

COMPONENT IDENTIFICATION

Code Class:	Class 1
Reference:	ASME, Section XI; 1995 Edition, 1996 Addenda; Table IWB-2500-1
Examination Categories:	B-K
Item Numbers:	B10.10
Description:	Alternate requirements to surface examination of areas shown in Figure IWB-2500-13.
Component Numbers:	Welded attachments SG-0006 and SG-0013 on Steam Generators RC-H-1A and RC-H-1B.

CODE REQUIREMENTS

ASME Code, Section XI, Rules for Inservice Inspection of Nuclear Power Plant Components, 1995 Edition with 1996 Addenda, Table IWB-2500-1, Examination Category B-K, Item B10.10 requires a surface examination of areas A-B and C-D on welded attachments similar to those shown on Figure
IWB-2500-13.

CODE REQUIREMENTS FROM WHICH RELIEF IS REQUESTED

Relief is requested from the surface examination requirement of Table IWB-2500-1, Examination Category B-K, Item B10.10 for area C-D as shown on Figure IWB-2500-13.

BASIS FOR RELIEF

Pursuant to 10 CFR 50.55a(g)(5)(iii), relief is requested on the basis that conformance with the Code requirements is impractical.

Relief is requested from performing the Code required surface examination of area C-D of the referenced welded attachments since the steam generator is designed in such a manner that access to this area for a meaningful examination is impractical. Detail "X" of drawing 131117E shows final machining details for these welds. Substantial surface preparation would be required to perform a surface examination. Access restrictions reduces to a 1¾ inch radius at this area precluding sufficient access for surface examination or weld preparation equipment and personnel.

This relief was previously granted by the NRC for use during the second inspection interval at TMI Unit 1.

PROPOSED ALTERNATIVE EXAMINATIONS

As an alternative to the Code required surface examination of areas shown on Figure IWB-2500-13 the following examinations will be performed:

(1) Code required surface examination of area A-B as shown on Figure IWB-2500-13
(2) Visual examination of area C-D as shown on Figure IWB-2500-13

PERIOD FOR WHICH RELIEF IS REQUESTED

Relief is requested for the third ten-year inspection interval of the Inservice Inspection Program for TMI Unit 1.

THIS PAGE IS AN OVERSIZED DRAWING OR FIGURE,

THAT CAN BE VIEWED AT THE RECORD TITLED:

DWG NO. 131117E, REV. 9 ASSEMBLY AND DETAIL OF LOWER HEAD

WITHIN THIS PACKAGE...OR, BY SEARCHING USING THE DRAWING NUMBER: 131117E

NOTE: Because of this page's large file size, it may be more convenient to copy the file to a local drive and use the Imaging (Wang) viewer, which can be accessed from the Programs/Accessories menu.

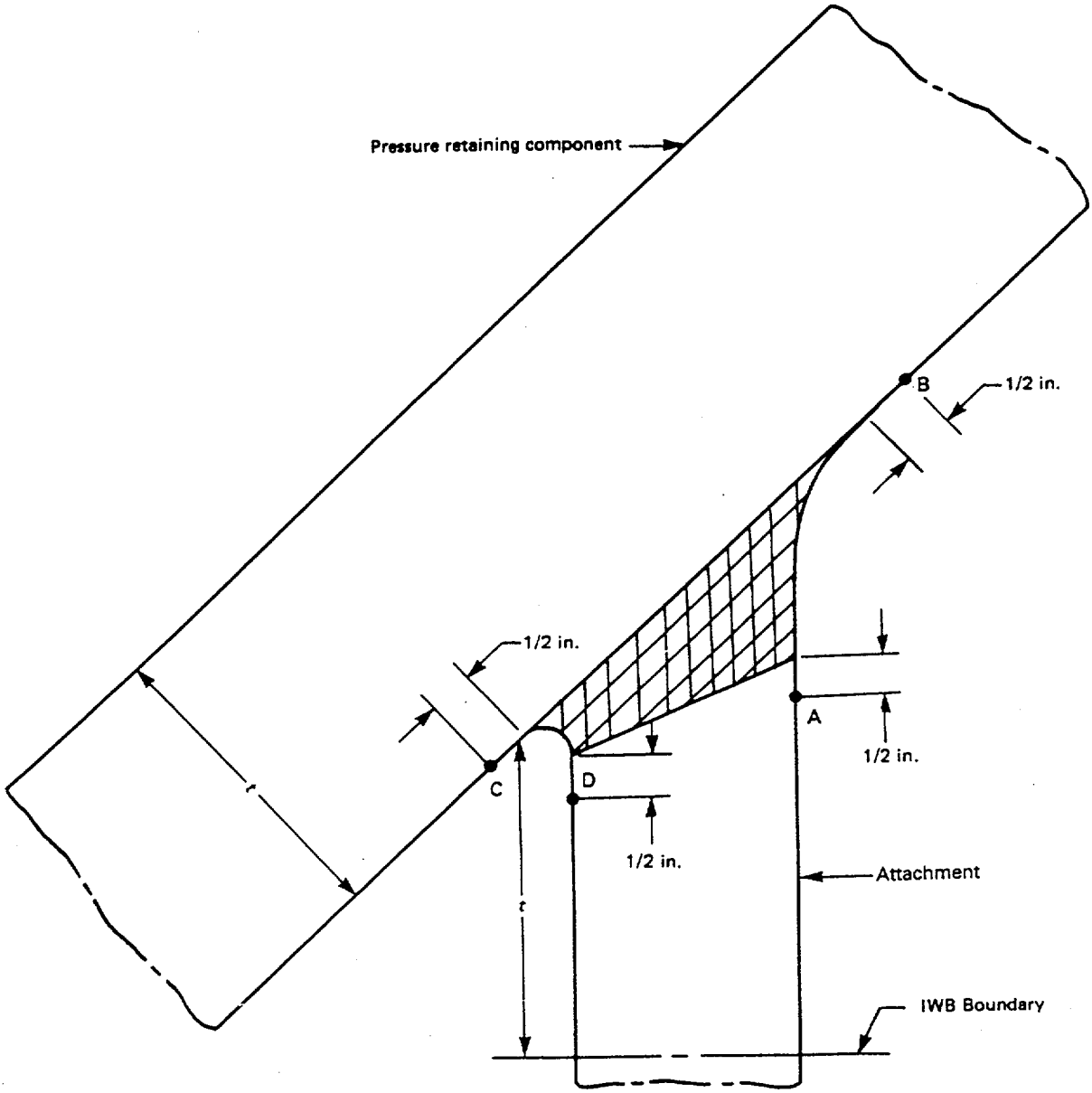

A95 FIG. IWB-2500-13 WELDED ATTACHMENT

AmerGen Energy Company
Three Mile Island Unit 1
Third 10-Year Interval
Request for Relief RR-00-03

COMPONENT IDENTIFICATION

Code Class:	Class 1
Reference:	ASME, Section XI; 1995 Edition, 1996 Addenda; Table IWB-2500-1
Examination Categories:	B-B
Item Numbers:	B2.70
Description:	Alternate requirements to extent of examination required by Table IWB-2500-1.
Component Numbers:	Longitudinal welds on Letdown Coolers MU-C-1A and MU-C-1B. Welds MU-1019L, MU-1020L, MU-1021L, MU-1022L, MU-1034L, MU-1035L, MU-1036L, MU-1037L.

CODE REQUIREMENTS

ASME Code, Section XI, Rules for Inservice Inspection of Nuclear Power Plant Components, 1995 Edition with 1996 Addenda, Table 2500-1, Examination Category B-B, Item B2.70 requires volumetric examination of 1 foot of longitudinal welds intersecting the circumferential weld at each end of the heat exchanger primary side shell. The examination may be limited to one vessel among the group of vessels performing a similar function.

CODE REQUIREMENTS FROM WHICH RELIEF IS REQUESTED

Relief is requested from the volumetric examination requirements of Table IWB-2500-1, Examination Category B-B, Item B2.70 that requires examination of 1 foot of longitudinal welds intersecting the circumferential.

BASIS FOR RELIEF

Pursuant to 10 CFR 50.55a(g)(5)(iii), relief is requested on the basis that conformance with the Code requirements is impractical.

Relief is requested from the Code required examination because the design of the letdown coolers precludes accessibility to the subject area of interest required to be examined. The letdown coolers are of a helical coil design using a split manifold to allow for tube expansion and seal welding prior to completing manufacture of the manifold. The tube bundle and all but approximately 1¼ inch of the inlet and 2¾ inch of the outlet manifolds are then covered by the Class 3 (heat sink) side of the heat exchanger. Access is therefore limited to the short section of manifold outboard of the heat sink side of the vessel. (Reference Drawings NU-C-1121-4, NU-C-1121-44, NU-D-1044-1, and ID-ISI-MU-036). In order to complete the volumetric examination to the extent required by the Code, the letdown coolers would require extensive modifications to obtain access.

The accessible portions of the subject welds are the most highly stressed areas and will receive the Code required volumetric examination.

This relief was previously granted for the second inservice inspection interval at TMI Unit 1 in the NRC's Safety Evaluation Report (SER), dated October 8, 1992, which references the GPUN submittal dated April 19, 1991.

PROPOSED ALTERNATIVE EXAMINATIONS

As an alternative to the Code required examination AmerGen proposes to volumetrically examine the accessible length of all manifold welds on one cooler during the third ten-year interval.

PERIOD FOR WHICH RELIEF IS REQUESTED

Relief is requested for the third ten-year inspection interval of the Inservice Inspection Program for TMI Unit 1.

THIS PAGE IS AN OVERSIZED DRAWING OR FIGURE,

THAT CAN BE VIEWED AT THE RECORD TITLED:

DWG NO. NU-C1121-44, REV. C LOWER MANIFOLD, 30 S6C-40LL WELDSEAL

WITHIN THIS PACKAGE...OR, BY SEARCHING USING THE DRAWING NUMBER: NU-C1121-44

NOTE: Because of this page's large file size, it may be more convenient to copy the file to a local drive and use the Imaging (Wang) viewer, which can be accessed from the Programs/Accessories menu.

THIS PAGE IS AN OVERSIZED DRAWING OR FIGURE,

THAT CAN BE VIEWED AT THE RECORD TITLED:

DWG NO. NU-C-1121-4, REV. C CENTER MANIFOLD, 30 S6C-40LL WELDSEAL WITHIN THIS PACKAGE...OR, BY SEARCHING USING THE DRAWING NUMBER: NU-C-1121-4

NOTE: Because of this page's large file size, it may be more convenient to copy the file to a local drive and use the Imaging (Wang) viewer, which can be accessed from the Programs/Accessories menu.

THIS PAGE IS AN OVERSIZED DRAWING OR FIGURE,

THAT CAN BE VIEWED AT THE RECORD TITLED:

DWG NO. NU-D-1044-I

LETDOWN COOLER

WITHIN THIS PACKAGE...OR, BY SEARCHING USING THE DRAWING NUMBER: NU-D-1044

NOTE: Because of this page's large file size, it may be more convenient to copy the file to a local drive and use the Imaging (Wang) viewer, which can be accessed from the Programs/Accessories menu.

THIS PAGE IS AN OVERSIZED DRAWING OR FIGURE,

THAT CAN BE VIEWED AT THE RECORD TITLED:

DWG NO. ID-ISI-MU-036, REV. I
LETDOWN COOLER DETAIL

WITHIN THIS PACKAGE...OR, BY SEARCHING USING THE DRAWING NUMBER: ID-ISI-MU-036

NOTE: Because of this page's large file size, it may be more convenient to copy the file to a local drive and use the Imaging (Wang) viewer, which can be accessed from the Programs/Accessories menu.

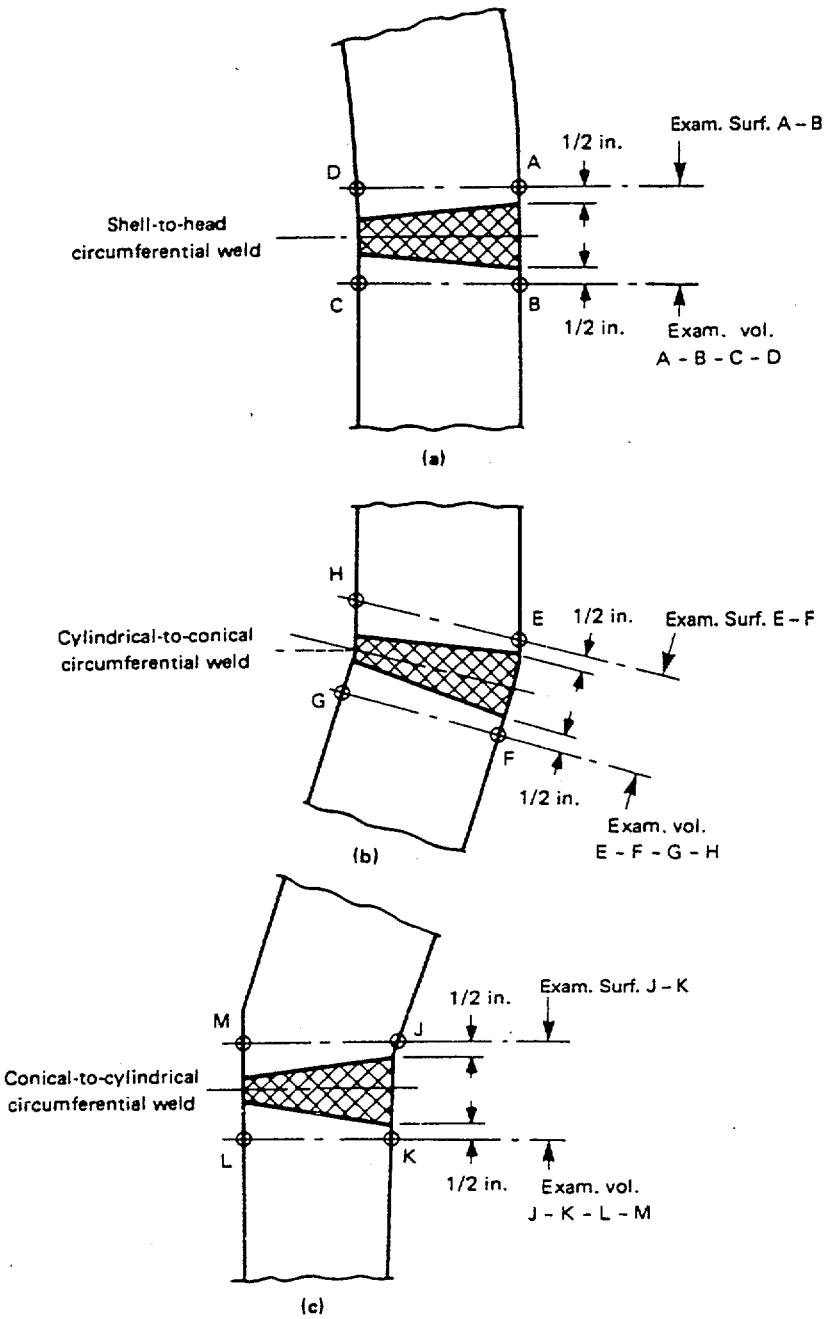

FIG. IWC-2500-1 VESSEL CIRCUMFERENTIAL WELDS

A95

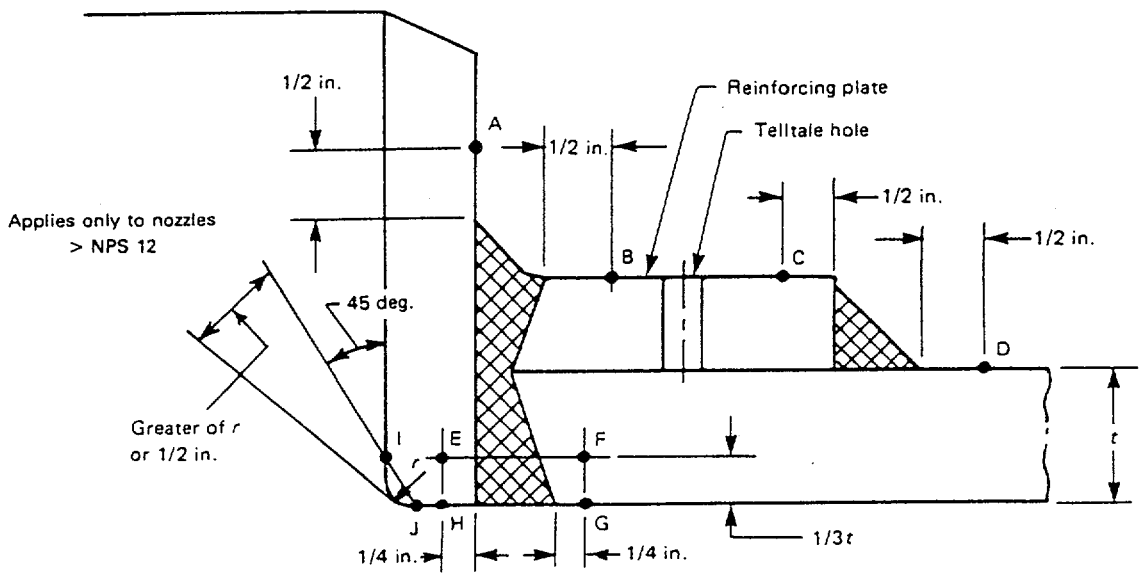

Exam. Surfaces A-B and C-D
Exam. Vols. E-F-G-H and I-J

(c)

FIG. IWC-2500-4 NOZZLE-TO-VESSEL WELDS (CONT'D)

AmerGen Energy Company
Three Mile Island Unit 1
Third 10-Year Interval
Request for Relief RR-00-04

COMPONENT IDENTIFICATION

Code Class:	Class 2
Reference:	ASME, Section XI; 1995 Edition, 1996 Addenda; Table IWC-2500-1
Examination Categories:	C-B
Item Numbers:	C2.32
Description:	Alternate requirements to volumetric examinations specified in Table IWC-2500-1.
Component Numbers:	Nozzle to shell welds and nozzle inner radii on Decay Heat Removal Coolers DH-C-1A and DH-C-1B. Components DH-0395B, DH-0397B, DH-0401B, DH-0403B.

CODE REQUIREMENTS

ASME Code, Section XI, Rules for Inservice Inspection of Nuclear Power Plant Components, 1995 Edition with 1996 Addenda, Table IWC-2500-1, Examination Category C-B, Item C2.32 requires a volumetric examination of the inner 1/3 wall thickness of nozzle welds and the nozzle inner radii as shown by Figure IWC-2500-4(c) when the inside of the vessel is accessible.

CODE REQUIREMENTS FROM WHICH AN ALTERNATIVE IS REQUESTED

An alternative is requested from the volumetric examination requirements of Table IWC-2500-1, Examination Category C-B, Item C2.32 which requires a volumetric examination of the inner 1/3 wall thickness of nozzle welds and the associated inner radii.

BASIS FOR RELIEF

Pursuant to 10 CFR 50.55a(a)(3)(i), an alternative is requested on the basis that the proposed alternatives provide an acceptable level of quality and safety.

An alternative is requested from performing the Code required volumetric examinations. Examination from the inside surface would require the development of remote operated scanners and data acquisition systems to minimize dispersion of sound and control of search unit skew angles in lieu of a manual examination. AmerGen does not consider this technology to be reasonably available for such a specific nozzle design and application with any certainty of the results. Significant lead-time would be required for technique development and personnel training. It is expected that there would be insufficient notification time, in the event that cooler maintenance were to become necessary.

Additionally, AmerGen estimates a dose rate of 500 mR/hr would be encountered at the cooler interior, which would also limit possible interior examination techniques. A manual examination, if attempted would require approximately two hours of scanning inside the cooler.

PROPOSED ALTERNATIVE EXAMINATIONS

As an alternative to the Code required examination, AmerGen proposes to perform a liquid penetrant examination of the inside of the nozzles area G-I as shown by Figure IWC-2500-4(c) if the coolers are disassembled for maintenance.

AmerGen proposes that a liquid penetrant examination be performed on the inside surface of the nozzles when the coolers are disassembled for maintenance. The liquid penetrant examination of the area of interest would require about ten minutes of time inside the cooler greatly minimizing the exposure of personnel as compared to the manual ultrasonic examination. In addition the liquid penetrant examination would provide a more reliable and sensitive examination for ID initiated flaws than would the ultrasonic examination. Any ultrasonic examination indications in this area would likely require their confirmation by either liquid penetrant or eddy current examination. AmerGen believes that the overall level of plant safety will be increased by performing the proposed alternative examination in lieu of the Code required ultrasonic examination.

This relief was previously granted for the second inservice inspection interval at TMI Unit 1 in the NRC's Safety Evaluation Report (SER), dated October 8, 1992, which references the GPUN submittal dated April 19, 1991.

PERIOD FOR WHICH AN ALTERNATIVE IS REQUESTED

Relief is requested for the third ten-year inspection interval of the Inservice Inspection Program for TMI Unit 1.

AmerGen Energy Company
Three Mile Island Unit 1
Third 10-Year Interval
Request for Relief RR-00-05

COMPONENT IDENTIFICATION

Code Class:	Class 2
Reference:	ASME, Section XI; 1995 Edition, 1996 Addenda; Table IWC-2500-1
Examination Categories:	C-A
Item Numbers:	C1.10
Description:	Alternate requirements to the volumetric examination of Heat Exchanger shell welds at gross structural discontinuities.
Component Numbers:	Heat Exchanger shell welds DH-0399 and DH-0404 on Decay Heat Removal Coolers DH-C1A and DH-C1B.

CODE REQUIREMENTS

ASME Code, Section XI, Rules for Inservice Inspection of Nuclear Power Plant Components, 1995 Edition with 1996 Addenda, Table IWC-2500-1, Examination Category C-A, Item C1.10 requires a 100% volumetric examination, as defined by Figure IWC-2500-1, of the heat exchanger shell welds at gross structural discontinuities.

CODE REQUIREMENTS FROM WHICH AN ALTERNATIVE IS REQUESTED

Relief is requested from the volumetric examination of Table IWC-2500-1, Category C-A, Item C1.10 which requires 100% examination of the heat exchanger shell welds at gross structural continuities.

BASIS FOR RELIEF

Pursuant to 10 CFR 50.55a(a)(3)(ii), an alternative is requested on the basis that compliance with the specified requirements would result in hardship or unusual difficulty without a compensating increase in the level of quality and safety.

Relief is requested from performing 100% of the Code required volumetric examination because of restricted access to the welds due to the cooler design which utilizes a removable primary head and tubesheet bundle in its design. The primary head (Class 2) is bolted to the tubesheet and heat exchanger shell (Class 3.) Drawing B-25533-A shows that the head has a retaining ring (Item A3) to shell (Item A1) weld covered by a sliding flange (Item A4.) This design makes examination of these welds impractical. Figure 1 attached is a 1 to 1 scale of the weld and sliding flange in both the installed and disassembled conditions. The figure shows that there is no scan surface available for ultrasonic examination while the cooler is in the assembled condition. Even if disassembled, insufficient outer diameter scan surface is available to perform UT examination.

If the cooler is required to be disassembled for maintenance, UT of the weld from the end surface or inside surface may be possible. AmerGen estimates the dose rates to be approximately 500 mR/hr at the inside surface of the cooler. If a liquid penetrant inspection of the weld was considered, AmerGen estimates that the examination of the inside surface would require only 10 to 15 minutes at the weld as compared with an estimated 2 to 3 hours of personnel time at the weld for UT. Liquid penetrant examination of the OD surface would result in minimal personnel exposure compared to examinations on the inside or end surfaces.

Disassembly and inspection of this cooler to accommodate required examinations would require approximately four man-weeks of labor and an estimated exposure of 2.5 Person-Rem. Disassembly of the cooler would require a decay heat removal system train be out of service for an extended length of time. It is difficult to obtain an ideal seal on the flanged connections which are prone to leakage.

Disassembly solely for the purpose of inspection would increase the probability of primary coolant leakage in the auxiliary building. Also, taking a train of decay heat removal out of service increases the likelihood of a loss of decay heat removal event as described in NRC Generic Letter 88-17.

The cooler is designed for the maximum allowable working pressure and temperature (505 psig at 250°F.) The weld was 100% radiographed during fabrication. Therefore, unacceptable fabrication related flaws should not exist. The borated water storage tank (BWST) provides a constant 40 psig static head to the cooler while in the standby mode. Throughwall leakage, if not detected during the scheduled VT-2 examinations, would be detected by an increase in activity along with an increase in auxiliary building sump level or a decrease in BWST level.

PROPOSED ALTERNATIVE PROVISIONS

As an alternative to the Code required examination, AmerGen proposes to perform a liquid penetrant examination of the ID and OD surface of the weld on one cooler should one or both coolers require disassembly for maintenance or repair during the interval. In addition, a VT-2 examination of the weld area will be performed, once each period, on each cooler while the cooler is in service.

Inservice induced flaws would originate from the inside or outside surface of the weld. Liquid penetrant examinations would provide a more reliable and sensitive examination for surface propagating flaws than would UT. If the cooler is disassembled, a liquid penetrant examination of the weld will be performed on both the inside and outside surfaces. A VT-2 examination, with emphasis on this area, will be performed each period whether the cooler is disassembled or not.

Use of the alternative examination would not result in a decrease in the overall level of plant safety for the following reasons. Disassembly of the cooler only for inspection purposes would increase the likelihood of leakage from the bolted connections. Sufficient monitoring is in place to detect through-wall leakage if it were to occur. If the cooler is disassembled for maintenance, liquid penetrant would be performed and would provide adequate sensitivity to detect service induced flaws.

This relief was previously granted for the second inservice inspection interval at TMI Unit 1 in the NRC's Safety Evaluation Report (SER), dated October 8, 1992 which references the GPUN submittal dated April 19, 1991.

PERIOD FOR WHICH RELIEF IS REQUESTED

Relief is requested for the third ten-year inspection interval of the Inservice Inspection Program at TMI Unit 1.

FIGURE

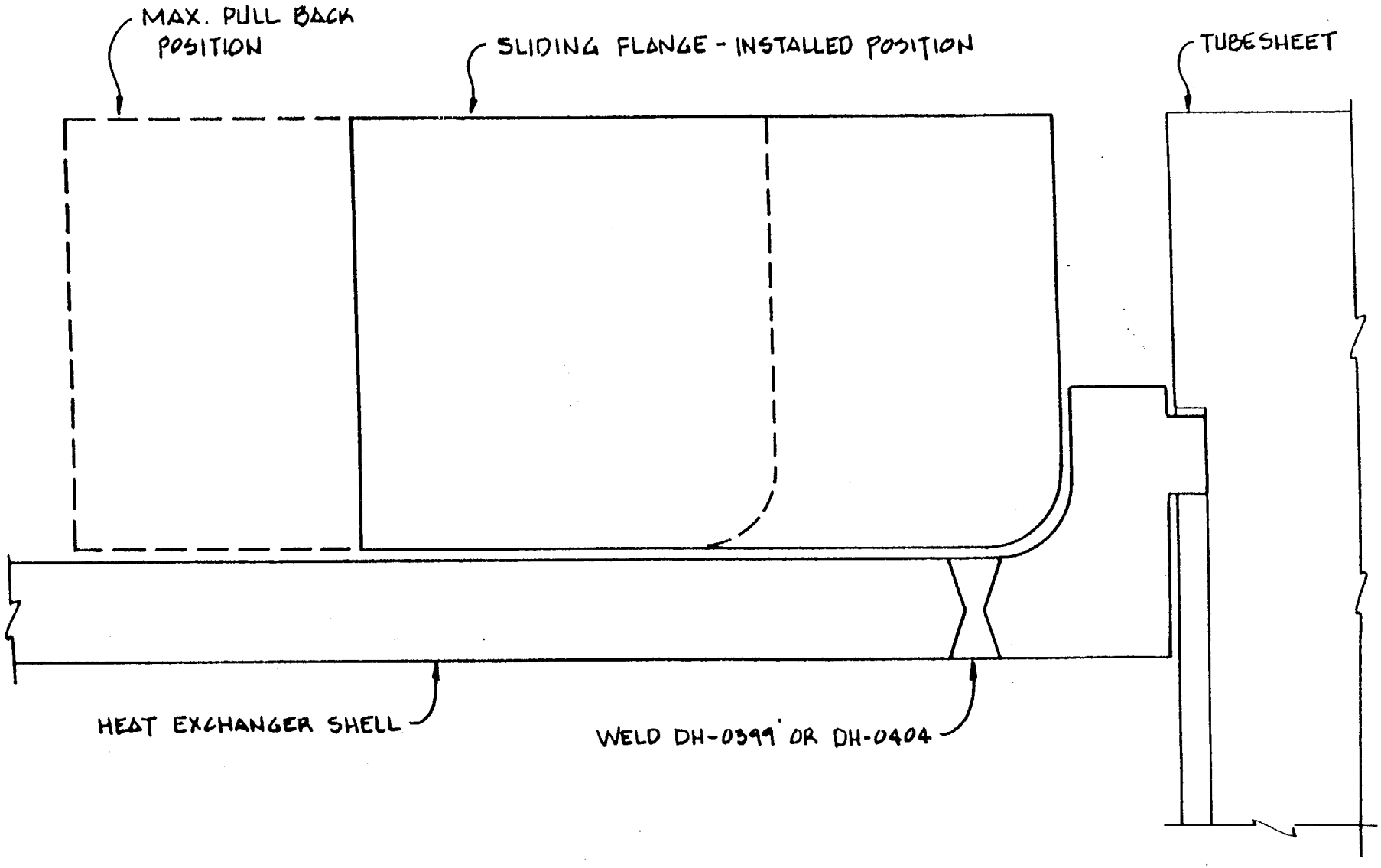

SCALE 1" = 1"

AmerGen Energy Company
Three Mile Island Unit 1
Third 10-Year Interval
Request for Relief RR-00-06

COMPONENT IDENTIFICATION

Code Class:	Class 1
Reference:	ASME, Section XI; 1995 Edition, 1996 Addenda; Table IWF-2500-1
Examination Categories:	F-A
Item Numbers:	F1.40
Description:	Alternative requirements to examination boundaries specified in Figure IWF-1300-1.
Component Numbers:	Reactor vessel support skirt.

CODE REQUIREMENTS

ASME Code, Section XI, Rules for Inservice Inspection of Nuclear Power Plant Components, 1995 Edition with 1996 Addenda, Table IWF-2500-1, Examination Category F-A, Item F1.40 requires a Visual VT-3 examination of the vessel support skirt to the extent indicated in IWF-1300 and IWF-2510 and as shown by Figure IWF-1300-1.

CODE REQUIREMENTS FROM WHICH RELIEF IS REQUESTED

Relief is requested from performing the VT-3 Visual examination of Table IWF-2500-1, Examination Category F-A, Item F1.40 which requires 100% examination of the reactor vessel support skirt.

BASIS FOR RELIEF

Pursuant to 10 CFR 50.55a(g)(5)(iii), relief is requested on the basis that conformance with the Code requirements is impractical.

Relief is requested from performing the Code required examination because of restricted access to the reactor vessel support skirt caused by the design of the support skirt. The reactor vessel is supported by a support skirt bolted to the reactor building floor inside the primary shield wall.

Access to the inside surface of the support skirt is obtained by entering a tunnel which leads to the reactor vessel lower head and incore instrument guide tubes. The entire lower head and approximately 50% of the support skirt are obstructed by mirror insulation when access is obtained from beneath the reactor vessel (reference drawing 500993001C.) The inside anchor area and a portion of the support skirt are visible using remote hand held cameras for about 50% of the circumference. The remaining circumference, where the incore guide tubes exit the reactor vessel shield area, is inaccessible because of the guide tubes.

Access to the outside surface of the skirt could only be obtained from the tip of the reactor vessel by lowering remote camera equipment between the reactor vessel and insulation and between the primary shield wall and insulation (reference drawing 500993001C.) This approach requires removal of sand plugs and insulation to a lower level than would be required for access to the nozzle to pipe welds discussed in Relief Request RR-00-01. The cumulative exposure involved for these examinations would be 87 Person-Rem. These visual examinations would increase that exposure. It would be necessary to navigate between insulation supports suing remote crawlers in order to view the anchor area.

This relief was previously granted for the second inservice inspection interval at TMI Unit 1 in the NRC's Safety Evaluation Report (SER), dated October 8, 1992, which references the GPUN submittal dated April 19, 1991.

PROPOSED ALTERNATIVE EXAMINATIONS

AmerGen proposes that based on the access restrictions, a VT-3 visual examination would be performed on the accessible areas of the reactor vessel support skirt inside surface.

PERIOD FOR WHICH RELIEF IS REQUESTED

Relief is requested for the third ten-year inspection interval of the Inservice Inspection Program for TMI Unit 1.

THIS PAGE IS AN OVERSIZED DRAWING OR FIGURE,

THAT CAN BE VIEWED AT THE RECORD TITLED:

DWG NO. LSS55-A, REV. 1
TUBE SHEET - PART -"D"

WITHIN THIS PACKAGE...OR, BY SEARCHING USING THE DRAWING NUMBER: LSS55-A

NOTE: Because of this page's large file size, it may be more convenient to copy the file to a local drive and use the Imaging (Wang) viewer, which can be accessed from the Programs/Accessories menu.

THIS PAGE IS AN OVERSIZED DRAWING OR FIGURE,

THAT CAN BE VIEWED AT THE RECORD TITLED:

DWG NO. 7080
MIRROR INSULATION

WITHIN THIS PACKAGE...OR, BY SEARCHING USING THE DRAWING NUMBER:
7080

NOTE: Because of this page's large file size, it may be more convenient to copy the file to a local drive and use the Imaging (Wang) viewer, which can be accessed from the Programs/Accessories menu.

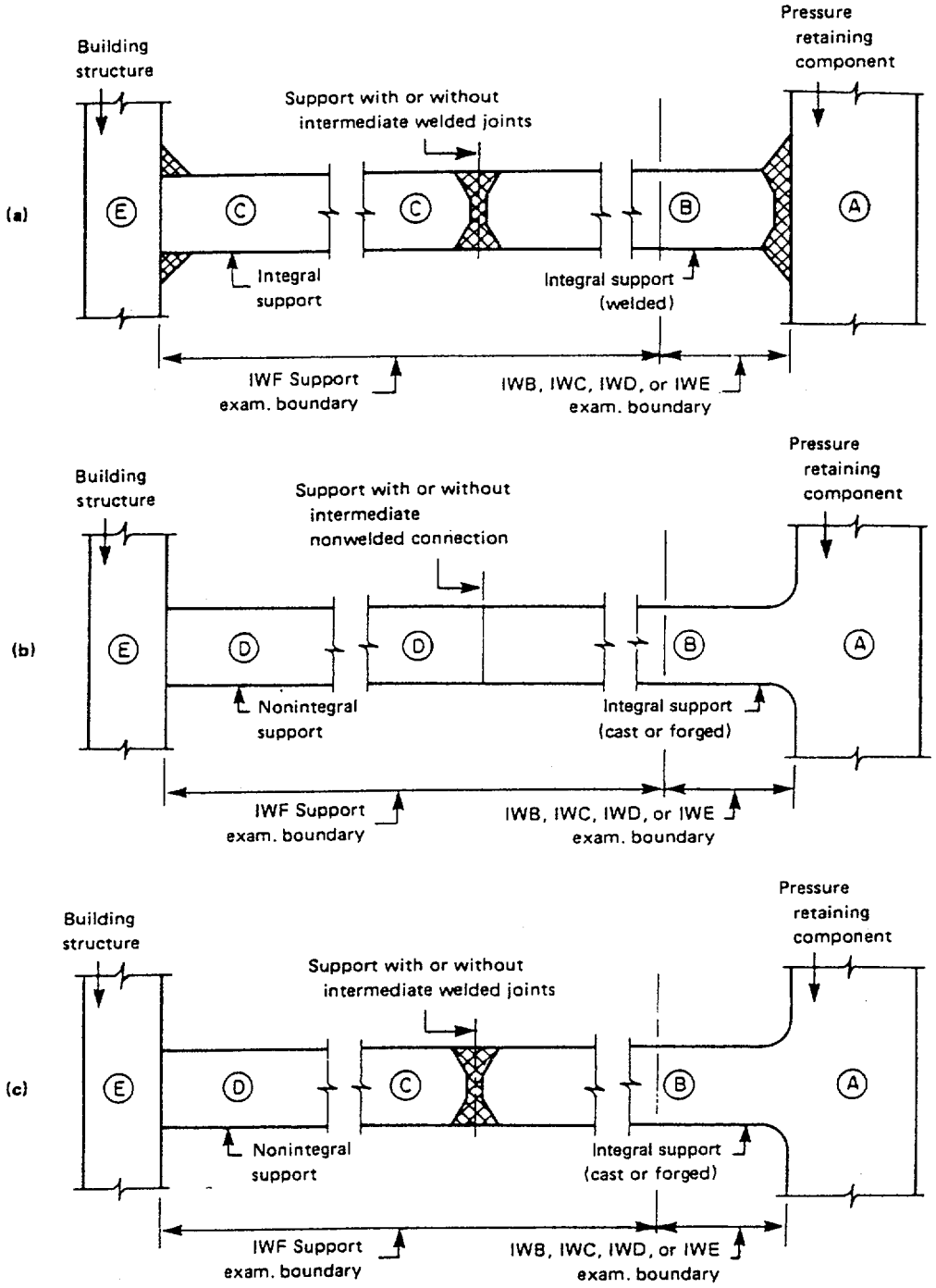

FIG. IWF-1300-1 ILLUSTRATIONS OF TYPICAL SUPPORT EXAMINATION BOUNDARIES A95

AmerGen Energy Company
Three Mile Island Unit 1
Third 10-Year Interval
Request for Relief RR-00-07

COMPONENT IDENTIFICATION

Code Class:	Class 1, Class 2, and Class 3
Reference:	ASME, Section XI; 1995 Edition, 1996 Addenda; IWA-2300
Examination Categories:	Not Applicable
Item Numbers:	Not Applicable
Description:	Alternative Requirements for Qualification of VT-2 Examination Personnel
Component Numbers:	Class 1, Class 2, and Class 3 Pressure Retaining Components

CODE REQUIREMENTS

ASME Code, Section XI, Rules for Inservice Inspection of nuclear Power Plant Components, 1995 Edition with 1996 Addenda, Subarticle IWA-2300 and Paragraph IWA-2312, require personnel performing nondestructive examinations not listed in SNT-TC-1A to be qualified and certified to a comparable level of qualification as defined in SNT-TC-1A and the Employer's written practice.

CODE REQUIREMENTS FROM WHICH AN ALTERNATIVE IS REQUESTED

Relief is requested from the requirements of IWA-2300 which requires personnel performing VT-2 examinations to be qualified and certified to comparable levels of qualifications as defined in SNT-TC-1A and the Employer's written practice.

BASIS FOR ALTERNATIVE

Pursuant to 10 CFR 50.55a(a)(3)(i), relief is requested on the basis that the proposed alternatives provide an acceptable level of quality and safety.

Section XI currently requires personnel conducting VT-2 inspections to be qualified and certified to comparable levels of qualifications as defined in SNT-TC-1A and the Employer's written practice. However, unlike the nondestructive testing methods addressed within SNT-TC-1A, or VT-1 and VT-3 examination methods, VT-2 examinations do not require any special knowledge of underlying technical principles to perform the examination. It is only a straightforward examination to look for evidence of leakage or structural distress. No special skills or technical training are required in order to observe water dripping from a component or bubbles forming on a wetted joint. As such, VT-2 personnel should not be subject to the same qualification and certification requirements that were established for nondestructive testing personnel. Code Case N-546 provides more appropriate requirements for the qualification and certification of VT-2 examination personnel.

Code Case N-546 requires that personnel performing VT-2 visual inspections have at least forty (40) hours of plant walkdown experience, receive a minimum of four (4) hours of training on Section XI requirements and shall be tested accordingly, and pass the vision test requirements of IWA-2321, 1995 Edition. This alternative to the existing Code requirements reduces the administrative burden of maintaining a Section XI qualification and certification program for VT-2 examiners, and allows for the use of personnel most familiar with the walkdown of plant systems, such as licensed and non-licensed operators, local leak rate test personnel, system engineers and examination personnel. The quality of VT-2 visual examinations will be maintained by using the alternative qualification criteria of the Code Case.

Code Case N-546 was approved by the ASME Boiler and Pressure Vessel Code Committee on August 24, 1995, but is not yet included in the most recent listing of NRC approved code cases provided in Draft Revision 12 of Regulatory Guide 1.147, "Inservice Inspection Code Case Acceptability – ASME, Section XI, Division 1."

PROPOSED ALTERNATIVE PROVISIONS

TMI Unit 1 will use the provision of Code Case N-546 in its entirety as an alternative to the requirements of Section XI, IWA-2300 for qualifying VT-2 visual examiners.

PERIOD FOR WHICH AN ALTERNATIVE IS REQUESTED

Relief is requested for the third ten-year inspection interval of the Inservice Inspection Program for TMI Unit 1.

AmerGen Energy Company
Three Mile Island Unit 1
Third 10-Year Interval
Request for Relief RR-00-08

COMPONENT IDENTIFICATION

Code Class:	Class 1 and Class 2
Reference:	ASME, Section XI; 1995 Edition, 1996 Addenda; IWA-5242(a)
Examination Categories:	Not Applicable
Item Numbers:	Not Applicable
Description:	Alternative requirements to insulation removal specified in IWA-5242(a).
Component Numbers:	Bolted connections in systems borated for the purposes of controlling reactivity.

CODE REQUIREMENTS

ASME Code, Section XI, Rules for Inservice Inspection of Nuclear Power Plant Components, 1995 Edition with 1996 Addenda, Paragraph IWA-5242(a) states, "For systems borated for the purpose of controlling reactivity, insulation shall be removed from the pressure retaining bolted connections for VT-2 visual examination." The VT-2 visual examination is required to be performed coincident with the system leakage test at nominal operating pressure and temperature.

CODE REQUIREMENTS FROM WHICH AN ALTERNATIVE IS REQUESTED

An alternative is requested from the requirements of IWA-5242(a) which requires the removal of insulation from bolted connections to perform VT-2 visual examinations at system pressure for systems borated for the purpose of controlling reactivity.

BASIS FOR ALTERNATIVE

Pursuant to 10 CFR 50.55a(a)(3)(i), an alternative is requested on the basis that the proposed alternative would provide an acceptable level of quality and safety.

An alternative is requested to the requirement to remove insulation from the subject bolted connections during the system leakage test at nominal pressure and temperature for the following reasons:

1. Code Class 1 systems borated for the purpose of controlling reactivity are large extensive systems covering many areas and elevations. Scaffolding is required to access many of the bolted connections. In addition, many of the bolted connections are located in difficult to access areas and in medium to high radiation areas. Insulation removal combined with scaffolding requirements will increase refuel outage durations, personnel exposure, financial costs and generation of radwaste associated with the performance of VT-2 visual examinations.

2. The VT-2 visual examination of Class 1 systems, primarily the Reactor Coolant System (RCS) piping and components which are located inside containment are performed at hot shutdown conditions. As required by IWB-5221, the RCS is at normal operating conditions. Removal/reinstallation of insulation for Class 1 systems pose significant radiological considerations. In addition, performance of the VT-2 visual examination, removal/reinstallation of insulation, and assembly/disassembly of scaffolding at bolted connections under these operating conditions also presents significant personnel safety considerations.

The following TMI Unit 1 bolting examination commitments in conjunction with the Proposed Alternative Provisions provide an acceptable level of safety and quality for bolted connections in systems borated for the purpose of controlling reactivity.

In response to NRC Generic Letter 88-05, TMI Unit 1 has established a program for engineering to examine all boric acid leaks discovered in the containment building and to evaluate the impact of those leaks on carbon steel or low alloy steel components. Any evidence of leakage, including dry boric acid crystals or residue, is examined and evaluated regardless of whether the leak was discovered at power or during an outage. Issues such as the following are considered in the examination and evaluation.

1. Evidence of corrosion or metal degradation.
2. Effect the leakage may have on the pressure boundary.
3. Possibility of boric acid traveling along the inside of insulation on piping.
4. Possibility of dripping or spraying on other components.

Based on this evaluation, TMI Engineering initiates appropriate corrective actions to preclude reoccurrence of the leakage and to repair or replace, if necessary, any degraded materials or components.

This relief was previously granted for the second inservice inspection interval at TMI Unit 1 in the NRC's Safety valuation Report (SER), dated October 8, 1992, which references the GPUN submittal dated April 19, 1991.

PROPOSED ALTERNATIVE PROVISIONS

As an alternative to the Code required examination, AmerGen proposes the following:

For Class 1 systems borated for the purpose of controlling reactivity, a system leakage test shall be performed in accordance with the frequency required by Table IWB-2500, Category B-P without the removal of insulation at bolted connections. A minimum 4-hour hold time at normal system operating pressure prior to the VT-2 visual examination to allow for leakage propagation from the insulation shall be required. Additionally, the insulation shall be removed from Class 1 bolted connections and a VT-2 visual examination shall be conducted with the system depressurized. The frequency for these depressurized VT-2 visual examinations shall be in accordance with the system examination frequencies specified in Table IWB-2500, Category B-P, each refueling outage. The propose alternative is consistent with the requirements of Code

Case N-533. These examinations shall be implemented through application of the TMI Unit 1 surveillance program to assure they are performed within the prescribed time periods.

PERIOD FOR WHICH AN ALTERNATIVE IS REQUESTED

An alternative is requested for the third ten-year inspection interval of the Inservice Inspection program for TMI Unit 1.

AmerGen Energy Company
Three Mile Island Unit 1
Third 10-Year Interval
Request for Relief RR-00-09

COMPONENT IDENTIFICATION

Code Class:	Class 1
Reference:	ASME, Section XI; 1995 Edition, 1996 Addenda; Table IWB-2500-1
Examination Categories:	B-P
Item Numbers:	B15.20
Description:	Alternative requirements to insulation removal required by IWA-5242(a)
Component Numbers:	Pressure retaining bolting on Pressurizer Heaters.

CODE REQUIREMENTS

ASME Code, Section XI, Rules for Inservice Inspection of Nuclear Power Plant Components, 1995 Edition with 1996 Addenda, Table IWB-2500-1, Examination Category B-P, Item B15.20 requires a system leakage test each refueling outage in accordance with IWB-5000 and IWA-5000. IWA-5242(a) further states that "for systems borated for the purpose of controlling reactivity, insulation shall be removed from the pressure retaining bolted connections for VT-2 visual examination."

CODE REQUIREMENTS FROM WHICH AN ALTERNATIVE IS REQUESTED

An alternative is requested to the Code requirements of IWA-5242(a) which requires the insulation to be removed from pressure retaining bolted connections when performing VT-2 visual examination on systems borated for the purpose of controlling reactivity.

BASIS FOR ALTERNATIVE

Pursuant to 10 CFR 50.55a(a)(3)(ii), an alternative is requested on the basis that compliance with the specified requirements would result in hardship or unusual difficulty without a compensating increase in the level of quality and safety.

Removing insulation surrounding the pressurizer heater connections is a hardship due to concern about damage to the heaters associated with the insulation removal and with the personnel radiation exposure associated with that operation. Wear and tear of the heater cable jackets has been noted to result in the past from activities such as removal and replacement of insulation. AmerGen has performed the VT-2 examination in the past and has never found evidence of leakage. The closure in question is different than the typical bolted connection partly because some of the joints are seal welded and that if the seal welds leaked, the leakage would be apparent without the removal of insulation. The benefit to be derived from the removal of the insulation in the area of the pressurizer heater connections does not justify actions that could potentially cause significant damage to the pressurizer heater connections.

This relief was previously granted for the second inservice inspection interval at TMI Unit 1 in the NRC's Safety Evaluation Report (SER), dated September 1, 1993, which references the GPUN submittal dated February 16, 1993.

PROPOSED ALTERNATIVE EXAMINATIONS

AmerGen proposes to conduct the VT-2 visual examination of the areas of bolted connections around the pressurizer heater electrical connections each refueling outage with the plant at hot shutdown conditions but with the insulation around the heater connections installed. A minimum of 4-hours at nominal operating pressure before the VT-2 visual examination shall be required.

PERIOD FOR WHICH ANTERNATIVE IS REQUESTED

Relief is requested for the third ten-year inspection interval of the Inservice Inspection Program for TMI Unit 1.

AmerGen Energy Company
Three Mile Island Unit 1
Third 10-Year Interval
Request for Relief RR-00-10

COMPONENT IDENTIFICATION

Code Class:	Class 2
Reference:	ASME, Section XI; 1995 Edition, 1996 Addenda; Table IWC-2500-1
Examination Categories:	C-H
Item Numbers:	C7.30
Description:	Alternative requirements to system leakage test pressure specified in IWC-5221.
Component Numbers:	Emergency Feedwater (EFW) System piping from EF-V30 control valves to the EF-V12 check valves.

CODE REQUIREMENTS

ASME Code, Section XI, Rules for Inservice Inspection of Nuclear Power Plant Components, 1995 Edition with 1996 Addenda, Table IWC-2500-1, Examination Category C-H, Item C7.30 requires a systems leakage test, VT-2 visual examination, each inspection period. IWC-5221 states that the nominal operating pressure during system operation shall be acceptable as the test pressure for the system leakage test.

CODE REQUIREMENTS FROM WHICH AN ALTERNATIVE IS REQUESTED

An alternative is requested from performing the systems leakage test required by Table IWC-2500-1, Examination Category C-H, Item C7.30 at the nominal operation pressure.

BASIS FOR ALTERNATIVE

Pursuant to 10 CFR 50.55a(a)(3)(i), an alternative is requested on the basis that the proposed alternatives provide an acceptable level of quality and safety.

The EFW system is a standby system used for emergency addition of feedwater to the Once Through Steam Generators (OTSGs.) The only other time the EFW pumps are operated is for testing in accordance with the Technical Specifications and the Inservice Testing Program. Testing this section of piping at nominal EFW pressure requires operating one or more EFW pumps and injecting room temperature condensate onto the hot tubes in the upper region of the OTSGs. This thermal shock increases the likelihood of initiating or propagating OTSG tube cracks. The water from the condensate storage tank is also highly oxygenated, causing increased corrosion in the OTSGs.

The leakage test for welds in this piping would be performed using the corresponding OTSG as the pressure source if there is sufficient backleakage past check valves EF-V12A/B. If there is

not sufficient back-leakage, a hydrostatic test pump would be the source of pressure and the piping will be pressurized to slightly less than OTSG pressure (to avoid unseating the check valves and potentially creating back-leakage.)

AmerGen has evaluated alternatives that would allow this section of piping to be tested at nominal EFW pressure without injecting cold oxygenated water into the OTSGs. One option would involve throttling the EFW pump discharge control valves EF-V30/A/B/C/D to minimize the amount of condensate injected into the OTSGs. However, the pressure drop across the throttled valve would still result in a pressure less than nominal EFW pressure in the piping covered by this relief request. Another option considered was to replace the tilting disc check valves with stop check valves so that the valves could be used to isolate that section of piping for testing. AmerGen concluded that the cost of this modification would be too high considering that the only benefit gained would be a slight increase in pressure during the leakage test.

The section of piping included in this alternative is within the scope of the Inservice Inspection Program and requires both volumetric and surface examination on a periodic basis. Three of the eleven welds in this section of the EFW system are between valves EF-V-30 and EF-V-12. All welds are similar in types and welding techniques and experience similar service conditions. These factors give added assurance that, if degradation of the welds should occur, it would be detected by the nondestructive examinations before leaks develop.

Therefore, AmerGen concludes that the benefit to be gained by conducting the test at higher test pressures does not justify the cost and risk of the actions that would be required to meet the Code requirement.

This relief was previously granted for the second inservice inspection interval at TMI Unit 1 in the NRC's Safety Evaluation Report (SER), dated September 1, 1993, which references the GPUN submittal dated February 16, 1993.

PROPOSED ALTERNATIVE PROVISIONS

As an alternative to the Code requirements, which would require the EFW piping VT-2 system leakage test at nominal pressure (~1050 psig), AmerGen proposes to perform the leakage test at the nominal operating pressure for the OTSGs which is about 900 psig.

PERIOD FOR WHICH ALTERNATIVE IS REQUESTED

Relief is requested for the third ten-year inspection interval of the Inservice Inspection Program for TMI Unit 1.

AmerGen Energy Company
Three Mile Island Unit 1
Third 10-Year Interval
Request for Relief RR-00-11

COMPONENT IDENTIFICATION

Code Class:	Class 1, Class 2, and Class 3
Reference:	ASME, Section XI; 1995 Edition, 1996 Addenda; IWA-5250(a)(2)
Examination Categories:	Not Applicable
Item Numbers:	Not Applicable
Description:	Alternative requirements to inspections specified in IWA-5250(a)(2).
Component Numbers:	Class 1, Class 2, and Class 3 bolted connections.

CODE REQUIREMENTS

ASME Code, Section XI, Rules for Inservice Inspection of Nuclear Power Plant Components, 1995 Edition with 1996 Addenda, Subsection IWA-5250(a)(2) requires that if leakage occurs at a bolted connection on other than a gaseous system, one of the bolts shall be removed, VT-3 examined, and evaluated in accordance with IWA-3100. The bolt selected shall be the one closest to the source of leakage. When the removed bolt has evidence of degradation, all remaining bolting in the connection shall be removed, VT-3 examined, and evaluated in accordance with IWA-3100.

CODE REQUIREMENTS FROM WHICH AN ALTERNATIVE IS REQUESTED

An alternative is requested from the Code requirements of Subsection IWA-5250(a)(2) which requires that if leakage occurs at a bolted connection on other than a gaseous system, one of the bolts shall be removed, VT-3 examined, and evaluated in accordance with IWA-3100.

BASIS FOR RELIEF

Pursuant to 10 CFR 50.55a(a)(3)(i), an alternative is requested on the basis that the proposed alternative provide an acceptable level of quality and safety.

Removal of pressure retaining bolting at mechanical connections for VT-3 visual examination and subsequent evaluation, in locations where leakage has been identified, is not always the most discerning course of action to determine acceptability of the bolting. The Code requirement to remove, examine, and evaluate bolting in this situation does not allow the owner to consider other factors which may indicate the acceptability of the mechanical joint bolting.

Other factors which should be considered when evaluating bolting acceptability when leakage has been identified at a mechanical joint include, but are not limited to: joint bolting material, service age of joint bolting material, location of leakage, history of leakage at the joint, evidence of corrosion with the joint assembled, and corrosiveness of process fluid.

Performance of the pressure test while the system is in service may identify leakage at a bolted connection that, upon evaluation may conclude that the integrity and pressure retaining ability of the joint is not challenged. It would not be prudent to negatively impact the availability of a safety system to perform its safety function.

A situation frequently encountered at AmerGen nuclear facilities is the complete replacement of bolting materials (studs, bolts, nuts, washers, etc.) at mechanical joints during plant outages. When the associated system piping is pressurized during plant startup, leakage may be identified at those joints. The root cause of this leakage is most often due to thermal expansion of the piping and bolting materials at the joint and subsequent fluid seepage at the joint gasket. Proper re-torquing of the joint bolting, in most cases, stops the leakage. Removal of the joint bolting to evaluate for corrosion would be unwarranted in this situation due to the new condition of the bolting materials.

PROPOSED ALTERNATIVE PROVISIONS

As an alternative to the bolt removal requirements of Subsection IWA-5250(a)(2), AmerGen proposes the following:

When leakage is identified at bolted connections by VT-2 visual examination during system pressure testing, an evaluation will be performed to determine susceptibility of the bolting to corrosion and assess the potential for failure. The evaluation will, at a minimum, consider the following factors:

1. bolting materials;
2. corrosiveness of process fluid leaking;
3. leakage location;
4. leakage history at connection or other system components;
5. visual evidence of corrosion at connection (while connection is assembled); and
6. service age of bolting materials.

When the pressure test is performed on a system that is in service or that Technical Specifications require to be operable, and the bolting is susceptible to corrosion, the evaluation shall address the connection's structural integrity until the next component/system outage of sufficient duration. If the evaluations conclude the system can perform its safety related function, removal of the bolt closest to the source of the leakage and a VT-3[1] visual examination of the bolt will be performed when the system or component is taken out of service for sufficient duration (to accomplish other system maintenance activities.)

For bolting that is susceptible to corrosion, and when the initial evaluation indicates that the connection cannot conclusively perform its safety function until the next component/system outage of sufficient duration, the bolt closest to the source of the leakage will be removed, and a VT-3 visual examination will be performed and results evaluated in accordance with IWA-3100(a).

1 The acceptance criteria for the Visual. VT-1 will be used to access acceptability of the bolting.

This relief was previously granted for the second inservice inspection interval at TMI Unit 1 in the NRC's Safety Evaluation Report (SER), dated December 2, 1998, which references the GPUN submittal dated June 3, 1998.

PERIOD FOR WHICH AN ALTERNATIVE IS REQUESTED

Relief is requested for the third ten-year inspection interval of the Inservice Inspection Program for TMI Unit 1.

AmerGen Energy Company
Three Mile Island Unit 1
Third 10-Year Interval
Request for Relief RR-00-12

COMPONENT IDENTIFICATION

Code Class:	Class 3
Reference:	ASME, Section XI; 1995 Edition, 1996 Addenda; Table IWD-2500-1
Examination Categories:	D-B
Item Numbers:	D2.20
Description:	Alternative requirements to the hydrostatic tests specified in Table IWD-2500-1.
Component Numbers:	Class 3 pressure retaining components.

CODE REQUIREMENTS

ASME Code, Section XI, Rules for Inservice Inspection of Nuclear Power Plant Components, 1995 Edition with 1996 Addenda, Table IWD-2500-1, Examination Category D-B, Item D2.20 requires a system hydrostatic test, VT-2 visual examination, each inspection period per the requirements of IWD-5222.

CODE REQUIREMENTS FROM WHICH AN ALTERNATIVE IS REQUESTED

An alternative is requested from performing the system hydrostatic test required by Table IWD-2500-1, Examination Category D-B, Item D2.20.

BASIS FOR RELIEF

Pursuant to 10 CFR 50.55a(a)(3)(i), an alternative is requested on the basis that the proposed alternatives provide an acceptable level of quality and safety.

ASME Section XI Boiler and Pressure Vessel Code committees and working groups have over recent years reviewed the requirements for hydrostatic testing. Code committee consensus acknowledged that the small increase in system pressure and limited challenge to pressure boundary integrity associated with a hydrostatic test versus the pressure for the system leakage test did not offset the hardship imposed by the performance of the hydrostatic test. As a result Code Case N-498-1 was published and endorsed by the NRC in Regulatory Guide 1.147. Section XI was later in the 1995 Edition and 1996 Addenda revised and the requirements of Code Case N-498-1 (i.e., system leakage tests replacing hydrostatic tests) were incorporated into Tables IWB-2500, Category B-P and IWC-2500, Category C-H. Code Case N-498-1 has since been annulled. However, the pressure test requirements for Class 3 stated in N-498-1 and endorsed by the NRC were erroneously omitted in the Code revision as shown by Table IWD-2500, Category D-B which still requires a system hydrostatic test. The Section XI working Group Pressure Testing has recognized this omission and is taking action via unanimous approval of File

ISI 00-11 (WG 98-0-4: S G99-12) to resolve this issue through Main Committee consideration under BPV LB 00-06.

The ASME Code has subsequently approved Code Case N-498-4 for use regarding pressure testing of Class 1, Class 2, and Class 3 systems. Code Case N-498-4 allows the alternative use of a system leakage test in lieu of hydrostatic testing for Class 3 systems. However, the Code Case does not require any hold time prior to the performance of the VT-2 examination. Contrary to the Case, TMI Unit 1 would impose a hold time as follows:

- For insulated systems, a 4-hour hold time would be required at system operating pressure and temperature.

- For non-insulated systems a hold time of 10 minutes would be required at system operating pressure and temperature.

PROPOSED ALTERNATIVE PROVISIONS

As an alternative to the Code requirements for Class 3 systems of Table IWD-2500-1, Examination Category D-B, Item D2.20, AmerGen proposes to perform a system leakage test each inspection period in lieu of hydrostatic testing per Code Case N-498-4.

The following hold times for the system pressure test would be imposed in addition to the requirements of Code Case N-498-4.

- For insulated systems, a 4-hour hold time would be required at system operating pressure and temperature.

- For non-insulated systems a hold time of 10 minutes would be required at system operating pressure and temperature.

PERIOD FOR WHICH AN ALTERNATIVE IS REQUESTED

An alternative is requested for the third ten-year inspection interval of the Inservice Inspection Program for TMI Unit 1.

AmerGen Energy Company
Three Mile Island Unit 1
Third 10-Year Interval
Request for Relief RR-00-13

COMPONENT IDENTIFICATION

Code Class:	Class 1, Class 2, and Class 3
Reference:	ASME, Section XI; 1995 Edition, 1996 Addenda; Tables IWB-2412-1, IWC-2412-1, IWD-2412-1, and IWF-2410-2
Examination Categories:	Not Applicable
Item Numbers:	Not Applicable
Description:	Alternative requirements to examination percentage completion.
Component Numbers:	Class 1, Class 2, and Class 3 components and supports.

CODE REQUIREMENTS

ASME Code, Section XI, Rules for Inservice Inspection of Nuclear Power Plant Components, 1995 Edition with 1996 Addenda, Tables IWB-2412-1, IWC-2412-1, IWD-2412-1, and IWF-2410-2 list the required percentages that must be performed per inspection period in accordance with Inspection Program B. Per these tables, the number of examinations to be completed during the first period shall be between 16% and 34%. For the second period, the total number of examinations to be completed shall be between 50% and 67%, and by the end of the third period, 100% of the examinations for the interval shall be completed.

CODE REQUIREMENTS FROM WHICH AN ALTERNATIVE IS REQUESTED

An alternative is requested from the Code requirements for examination percentage completion identified in Tables IWB-2412-1, IWC-2412-1, IWD-2412-1, and IWF-2410-2.

BASIS FOR ALTERNATIVE

Pursuant to 10 CFR 50.55a(a)(3)(i), an alternative is requested on the basis that the proposed alternative would provide an acceptable level of quality and safety.

The inspection program percentage tables of ASME Code Section XI were originally established such that approximately one-third of the non-deferred component examinations would be performed each period. The emergence of longer plant operating fuel cycles coincident with efforts to reduce the length of refueling outages have limited the amount of time available to perform examinations. These factors make it difficult to plan and complete the Code required percentages of examinations in allotted critical path time.

The alternative provision was developed to address these issues. Expansion of the range for examination completion percentages shown in Table 1 allows component examinations to be more evenly distributed between outages. In addition, this expansion minimizes the need to

schedule excessive numbers of examinations during a specific outage, and allows for a more uniform distribution between outages that is more conducive to performing quality examinations. Repetitive costs associated with inspections, such as the erecting and disassembly of scaffolding, labor costs associated with acquiring inspectors each outage, can be minimized through balancing the inspection percentages.

Two additional factors were considered when evaluation the impact of the percentage requirements of Table 1 on plant safety. The first was that the existing examination percentage tables of Section XI allow up to 50% of the examinations to be performed in the second and third periods, but only 34% can be performed in the first period. Therefore, the Section XI Inspection Plan B schedules are biased towards delaying examinations until the end of the interval. The more flexible percentages required by Table 1 allows for more examinations to be performed earlier in the interval. This should improve safety because any degradation, should it exist, would be detected earlier in the interval.

The second factor that was considered was that some minimum amount of examinations should be required in each period. To address this consideration, Note 1, is included in the table, so the examinations will be required during all three inspection periods.

Based on the factors identified above, AmerGen considers that the alternative provisions provide an acceptable level of quality and safety.

PROPOSED ALTERNATIVE PROVISIONS

As an alternative to the Code requirements for the determination of examination percentage completion identified in Section XI Tables IWB-2412-1, IWC-2412-1, and IWF-2410-2, AmerGen proposes the use of the examination percentages identified in Table 1 below.

Table 1

Inspection Interval	Inspection Period, Calendar Years of Plant Service Within the Interval	Minimum Examinations Completed, %	Maximum Examinations Credited, %
3rd	3	16	50
	7	50[1]	75
	10	100	100

NOTE:

(1) If the first period completion percentages for any examination category exceeds 34%, at least 16% of the required examinations shall be performed in the second period.

PERIOD FOR WHICH ALTERNATIVE IS REQUESTED

An alternative is requested for the third ten-year inspection interval of the Inservice Inspection Program for TMI Unit 1.

AmerGen Energy Company
Three Mile Island Unit 1
Third 10-Year Interval
Request for Relief RR-8

COMPONENT IDENTIFICATION

Code Class:	Class MC pressure retaining bolting
Reference:	ASME, Section XI, 1992 Edition, 1992 Addenda, Table IWE-2500-1
Examination Categories:	E-G
Item Numbers:	E8.10
Description:	Alternative requirements to VT-1 visual examinations of bolted connections.
Component Numbers:	Class MC pressure retaining bolting.

CODE REQUIREMENTS

ASME Section XI, 1992 Edition, 1992 Addenda, Table IWE-2500-1, Examination Category E-G, Pressure Retaining Bolting, Item E8.10, requires that Class MC bolted connections be subject to a VT-1 visual examination.

CODE REQUIREMENTS FROM WHICH RELIEF IS REQUESTED

Relief is requested from the ASME Section XI Code required VT-1 examinations specified in Table IWE-2500-1, Examination Category E-G, Pressure Retaining Bolting, Items E8.10. Deferral of inspection to the end of the interval is permissible.

BASIS FOR RELIEF

Pursuant to 10 CFR 50.55a(a)(3)(ii), relief is requested for the Three Mile Island Unit 1 Nuclear Generating Station on the basis that compliance with the specified Code requirements would result in hardship or unusual difficulty without a compensating increase in the level of quality and safety.

10 CFR 50.55a was amended in the Federal Register (61FR41303) to require the use of the 1992 Edition, 1992 Addenda, Section XI when performing containment inspections. Section XI requires a VT-1 visual examination of bolted connections, which was reevaluated during subsequent rewrites of Subsection IWE. During the review of Examination Category E-G examination criteria, the following factors were considered:

1) Containment surfaces, including bolted connections, are already subject to visual examination in accordance with Table IWE-2500-1, Examination Category E-A.

2) Bolted connections in containment are subject to the performance of 10 CFR 50 Appendix J testing.

3) Containment bolting is not subjected to any known degradation mechanism. These bolts are not within a corrosive environment, and therefore problems with containment bolting have not been identified as a problem through out the industry.

4) More specifically, AmerGen performed the required IWE expedited examinations during the 1R13 Outage (September - October 1999). Thirteen (13) penetrations were identified that contained pressure retaining bolting meeting the requirements of Examination Category E-G, Item E8.10. Of these 13 Penetrations, 11 were VT-1 inspected and the remaining 2 were VT-3 examined due to inaccessibility. Only one bolt out of the population of 13 penetrations had a recordable condition and that was for a questionable full thread engagement attribute, resulting from an installation discrepancy and not an inservice degraded condition. This finding was disposition as use-as-is by engineering.

During review of the 1998 Edition of the Code, the conclusion reached by ASME Section XI was that Examination Category E-G examinations on bolted connections were not warranted. In the commentary which accompanied the Subsection IWE rewrite, the following was written:

" Pressure retaining bolting as a separate category has been deleted, and the examination requirements for pressure retaining bolting have been consolidated into Category E-A. Examination of pressure retaining bolting does not require removal or disassembly, and only those exposed surfaces of the bolting materials need be examined."

As a result, Examination Category E-G was eliminated from Table IWE 2500-1 of the 1998 Edition of ASME Section XI.

The performance of VT-1 visual examinations on bolted connections in accordance with the 1992 Edition, 1992 Addenda represents a hardship with no compensating increase in the level of quality and safety. The re-examination of bolted connections that are already examined as part of Examination Category E-A, and tested in accordance with 10 CFR 50, Appendix J, unnecessarily increases the number of inservice examinations and the associated radiation exposure to personnel.

PROPOSED RELIEF

The following examinations required by Subsection IWE assure the structural integrity and the leak-tightness of Class MC pressure retaining bolting, and therefore, no additional alternative examinations are proposed.

1. Exposed surfaces of bolted connections shall be visually examined in accordance with the requirements of Table IWE-2500-1, Examination Category E-A, Containment Surfaces, using VT-3 certified inspectors. These examinations shall be evaluated in accordance with the requirements of IWE-3510. Deficiencies shall be evaluated by certified VT-1 examiners and dispositioned by engineering under a formal program.

2. Bolted connections shall meet the pressure test requirements of 10 CFR 50, Appendix J.

PERIOD FOR WHICH RELIEF IS REQUESTED

Relief is requested for the first inspection interval IWE containment inspections required by ASME B&PV Code Section XI, 1992 Edition, 1992 Addenda.

THREE MILE ISLAND NUCLEAR STATION
UNIT 1

ISI CLASSIFICATION BASIS DOCUMENT
THIRD TEN-YEAR INSPECTION INTERVAL

Commercial Service Date:

Unit 1 – 09/02/74

Three Mile Island Nuclear Station
Route 441 South, Londonderry Township
Middletown, Pennsylvania 17057

AmerGen Energy Company, LLC

REVISION CONTROL SHEET

TITLE: ISI Classification Basis Document
Third Ten-Year Inspection Interval
Three Mile Island Nuclear Station, Unit 1

DOCUMENT NUMBER: TMI-1-BASIS

REVISION: 0

PREPARED: Rich Ostrowski
Washington Group International
ISI Engineer

REVIEWED: R. B. Corbett
Program Engineer

APPROVED: Howard R. Crawford
Manager, Programs 4/4/01

Each time this document is revised, the following table should be completed to provide a detailed record of the revision history. The major changes should be outlined within the table. Editorial and formatting revisions are not required to be logged. The signatures above apply only to the changes made in the revision noted. If historical signatures are required, station archives will need to be retrieved.

Revision	Date	Revision Summary
0	4/19/01	Initial issuance.

Note: This ISI Classification Basis Document is controlled on-site by the TMI-1 Station Engineering Programs Group.

If TMI-1 Station Piping & Instrumentation Drawings (P&IDs) are revised and the changes do not affect the ISI classification boundaries, the updates required for the Basis Document are to revise the Revision Control Sheet, Revision Summary Page, and the Table of Contents. Thus, the Table of Contents will document the latest drawing revision which has been reviewed for ISI program incorporation.

REVISION SUMMARY

Section	Effective Pages	Revision	Date
	i to v	0	4/19/01
1.0	1-1 to 1-2	0	4/19/01
2.0	2-1 to 2-2	0	4/19/01
3.0	3-1 to 3-4	0	4/19/01
4.0	4-1 to 4-2	0	4/19/01
4.1	4.1-1 to 4.1-36	0	4/19/01
5.0	5-1 to 5-2	0	4/19/01
6.0	6-1 to 6-2	0	4/19/01

TABLE OF CONTENTS

SECTION	DESCRIPTION	PAGE
1.0	INTRODUCTION	1-1
2.0	BACKGROUND	2-1
3.0	DISCUSSION	3-1
4.0	ISI BOUNDARY SUMMARIES	4-1
4.1	SYSTEMS INCLUDED IN THE ISI PROGRAM	
	MAIN STEAM SYSTEM	
4.1.1	Main Steam System (ID-ISI-FD-001)	4.1-2
	RIVER WATER SYSTEM	
4.1.2	River Water System (ID-ISI-FD-002)	4.1-4
	DECAY HEAT CLOSED CYCLE COOLING SYSTEM	
4.1.3	Decay Heat Closed Cycle Cooling System (ID-ISI-FD-003)	4.1-6
	CORE FLOODING SYSTEM	
4.1.4	Core Flooding System (ID-ISI-FD-004)	4.1-7
	DECAY HEAT REMOVAL SYSTEM	
4.1.5	Decay Heat Removal System (ID-ISI-FD-005)	4.1-8
	CONDENSATE SYSTEM	
4.1.6	Condensate System (ID-ISI-FD-008)	4.1-10
	EMERGENCY FEEDWATER SYSTEM	
4.1.7	Emergency Feedwater System (ID-ISI-FD-009)	4.1-11
	FEEDWATER SYSTEM	
4.1.8	Feedwater System (ID-ISI-FD-009)	4.1-13
	NUCLEAR SERVICE CLOSED CYCLE COOLING WATER SYSTEM	
4.1.9	Nuclear Service Closed Cycle Cooling Water System (ID-ISI-FD-010)	4.1-14
	CONTROL BUILDING CHILLED WATER SYSTEM	
4.1.10	Control Building Chilled Water System (ID-ISI-FD-010)	4.1-16

REACTOR BUILDING SPRAY SYSTEM
4.1.11 Reactor Building Spray (ID-ISI-FD-012) 4.1-17

PENETRATION PRESSURIZATION AND HYDROGEN RECOMBINER SYSTEM
4.1.12 Penetration Pressurization and Hydrogen Recombiner System (ID-ISI-FD-015) 4.1-19

MAKEUP AND PURIFICATION SYSTEM (LETDOWN PORTION)
4.1.13 Makeup and Purification System Letdown Portion (ID-ISI-FD-016) 4.1-21

MAKEUP AND PURIFCATION SYSTEM (MAKEUP PORTION)
4.1.14 Makeup and Purification System Makeup Portion (ID-ISI-FD-017) 4.1-23

SPENT FUEL COOLING SYSTEM
4.1.15 Spent Fuel Cooling System (ID-ISI-FD-018) 4.1-26

REACTOR COOLANT SYSTEM
4.1.16 Reactor Coolant System (ID-ISI-FD-019) 4.1-28

CHEMICAL SAMPLING AND OTSG CHEMICAL CLEANING SYSTEMS
4.1.17 Chemical Sampling and OTSG Chemical Cleaning Systems (ID-ISI-FD-020) 4.1-30

CHEMICAL ADDITION AND LIQUID WASTE DISPOSAL SYSTEM
4.1.18 Chemical Addition and Liquid Waste Disposal System (ID-ISI-FD-021) 4.1-32

INTERMEDIATE COOLING SYSTEM
4.1.19 Intermediate Cooling System (ID-ISI-FD-022) 4.1-34

HYDROGEN PURGE SYSTEM AND MISCELLANEOUS PENETRATIONS
4.1.20 Hydrogen Purge System and Miscellaneous Penetrations (ID-ISI-FD-023) 4.1-35

5.0 ISI CLASSIFICATION TECHNICAL POSITIONS 5-1
6.0 REFERENCES 6-1

TABLE OF CONTENTS
APPENDICES

SECTION	DESCRIPTION
Appendix A	TMI Unit 1 ISI Boundary Sketches

1.0 INTRODUCTION

This document establishes the basis for the classification of safety related, pressure retaining, fluid systems and components (those containing water, steam, air, oil, etc.) for the TMI Unit 1 In-service Inspection (ISI) Program. As discussed in this document, the ISI Program scope consists of those inspection and testing requirements mandated by ASME Section XI and Augmented ISI requirements, such as those included in the TMI Unit 1 Station licensing commitments. Examination and testing requirements are contained in TMI Unit 1's ISI Program Plan, while specific examination selection criteria and schedules are detailed in the ISI Selection Document.

Safety related systems and components are those that are relied upon to remain functional during or following a design basis event to assure:

- The integrity of the reactor coolant pressure boundary,
- The capability to shut down the reactor and maintain it in a safe shutdown condition, or
- The capability to prevent or mitigate the consequences of accidents which could result in potential offsite exposures comparable to the applicable guideline exposures set forth in 10 CFR 100.11.

For the purpose of determining which systems and components are required to shut down the reactor and maintain it in a safe shutdown condition, a unit is considered in safe shutdown with: (1) the reactivity of the reactor kept to a margin below criticality, consistent with technical specifications; (2) the core decay heat removed at a controlled rate, sufficient to prevent core or Reactor Coolant System thermal design limits from being exceeded; (3) radioactive material releases controlled to keep the doses within prescribed limits; and (4) operation within design limits of structures, systems, and components necessary to maintain these conditions.

Once this safety related criteria is applied, components within the reactor coolant pressure boundary (RCPB), as defined by 10 CFR 50.2 and not excluded from Class 1 requirements by 10 CFR 50.55a(c)(2)(i) or (ii), are designated as Class 1. Those RCPB components excluded from Class 1 requirements per 10 CFR 50.55a(c)(2)(i) or (ii) are designated Class 2 per Regulatory Guide 1.26, Paragraph C.1. The remaining safety related components are evaluated for Class 2 or Class 3 designation in accordance with the guidelines of Regulatory Guide 1.26, ANSI N18.2-1973, and ANSI N18.2a-1975. Per Regulatory Guide 1.26, Paragraphs A and B, the ASME Class 2 and Class 3 boundaries are limited to safety-related systems and components. ASNI N18.2-1973 provides classification criteria specific to the functional requirements of PWR fluid systems related to nuclear safety or to potential release of radioactivity. ASNI N18.2a-1975 addendum gives additional classification boundary interface criteria not contained in ANSI N18.2. TMI Unit 1 is only committed to and licensed in accordance with the rules and regulations of 10 CFR 50, and Regulatory Guide 1.26.

For the purpose of defining the Third Ten-Year Interval ISI Classifications, Revision 3 of Regulatory Guide 1.26 and ANSI N18.2-1973 are utilized at TMI Unit 1. Compliance with Revision 3 of Regulatory Guide 1.26 was committed to in the TMI Unit 1 Quality Assurance Plan.

The use of this document in conjunction with the plant ISI Boundary Sketches details the specific components which are required to be included in the ASME Section XI program and, in general, the examinations and tests required by ASME Section XI, Subsections IWA, IWB, IWC, IWD, and IWF, as well as Augmented ISI requirements imposed on or committed to by AmerGen Energy Company, LLC. The ISI Boundary Sketches for the components and systems addressed in Section 4.1 are included in Appendix A of this document.

Included in this basis document is the information regarding Containment In-service Inspection (CISI) for subsections IWE and IWL. The CISI Program is required per 10 CFR 50.55a(b)(2)(ix)(E) and 10 CFR 50.55a(b)(2)(x)(A) using the 1992 Edition with the 1992 Addenda of the ASME code.

For detailed discussion of the ISI Classification process at TMI Unit 1, see Sections 2.0 and 3.0 of this document.

2.0 BACKGROUND

I. Code of Federal Regulations Classification Criteria

According to 10 CFR 50.55a(g)(4), the specific components required to be included in an ISI Program subject to ASME Section XI inspection and testing are those components and component supports which are classified as ASME Class 1, Class 2, and Class 3. 10 CFR 50.55a(a)(3) does allow alternatives when authorized by the Director of the Office of Nuclear Reactor Regulation. The NRC may also require a licensee to follow an augmented in-service inspection program for systems and components for which they deem an added assurance of structural reliability is necessary, per 10 CFR 50.55a(g)(6)(ii).

II. Classification Document Criteria

Criteria for classification of the RCPB is covered in 10 CFR 50.55a(c). Criteria for the classification of components not addressed in 10 CFR 50.55a is provided in Regulatory Guide 1.26 and ANSI N18.2-1973. Implementation of the ASME B&PV Code, Section XI requirements is included in the TMI Unit 1 Technical Sepcification.

III. ASME Section XI Classification Criteria

According to the 1995 Edition, 1996 Addenda of Section XI (applicable version for TMI Unit 1's third inspection interval), IWA-1400(a), it is the owner's responsibility to determine the appropriate Code Classes for each component and to identify the system boundaries subject to inspection. IWA-1300 states that components identified for inspection and testing shall be included in the in-service inspection plan. The selection of components for the in-service inspection plan is subject to review by the regulatory and enforcement authorities having jurisdiction at the plant site. IWA-1320(a) states that the system group classification criteria of the regulatory authorities having jurisdiction at the power plant site governs the application of the rules of Section XI. IWA-1400(a), Footnote 2, states that classification criteria are specified in 10 CFR 50. TMI
Unit 1 complies with the requirements of Regulatory Guide 1.26 and ANSI N18.2-1973 for determining Quality Group designations.

IV. TMI Unit 1 ISI Program Development

In accordance 10 CFR 50.55a, AmerGen Energy Company is required to update the ISI program for ASME Class 1, Class 2, and Class 3 components for TMI Unit 1 once every ten years (10-year intervals). The ISI program is required to comply with the latest edition and addenda of ASME Section XI incorporated by reference in 10 CFR 50.55a one year prior to the start of the interval per 10 CFR 50.55a(g)(4)(ii).

As of April 19, 2000, one year prior to the end of Interval 2 for TMI Unit 1, the latest edition and addenda of ASME Section XI referenced in 10 CFR 50.55a was the 1995 Edition, 1996 Addenda. Accordingly, the 1995 Edition, 1996 Addenda of ASME Section XI, Subsections IWA and IWB, IWC, IWD, and IWF will be utilized for ISI program development. The ISI Program Plan details the requirements for examination and testing of ISI Class 1, Class 2, and Class 3 pressure retaining components and component supports. The ISI Program Plan also includes augmented in-service inspections and pressure testing requirements imposed on or committed to by TMI Unit 1.

The requirements of 1992 Edition of ASME Section XI with Addenda through 1992, Subsections IWE and IWL are referenced in this document regarding the in-service inspection of Metal Containment (MC) and Concrete Containment (CC) components. These ASME Section XI rules became effective September 9, 1996, per final rule making to 10 CFR 50.55a in the Federal Register dated August 8, 1996. The program addressing inspection requirements for the subsections is maintained as a separate program.

3.0 DISCUSSION

I. ISI Boundary Classification Process – General

The ISI classification of systems and components is a two-phase process. First, classification is performed based on system/component function. After this initial bounding process, the included components are evaluated for the application of ASME Section XI requirements and exemptions.

A. ISI Boundary Classification Process – Functional

Each safety related fluid system containing water, steam, air, oil, etc. included in the TMI Unit 1 FSAR was reviewed to determine which safety functions they perform during all modes of system and plant operation. Based on these safety functions, the systems and components were evaluated per the appropriate classification documents discussed in this Section and indexed accordingly as Quality Group A (ASME Class 1), Quality Group B (ASME Class 2), Quality Group C (ASME Class 3), or Quality Group D non-classed (Non-Nuclear Safety). The systems and components which are typically included in the ASME Section XI program are those that are nuclear safety related and designed ASME Class 1, Class 2, or Class 3.

The details of this functional bounding are included in the Notes section of the ISI Boundary Sketch and for the most part, follow classifications such that Quality Group A/ASME Class 1 component ISI is per ASME Section XI, Subsection IWB, Quality Group B/ASME Class 2 component ISI is per ASME Section XI, Subsection IWC, and Quality Group C/ASME Class 3 component ISI is per ASME Section XI, Subsection IWD. Deviations from this ISI Classification scheme will be specifically noted on the applicable ISI Boundary Sketches.

When a particular group of components has been identified as performing a Quality Group A, Quality Group B, or Quality Group C function, the components are further reviewed to assure the interfaces (boundary valves and boundary barriers) meet the criteria of 10 CFR 50.2, 10 CFR 50.55a(c)(2), Regulatory Guide 1.26, Footnote 4, Regulatory Guide 1.26, C.1.d, or ANSI N18.2a-1975, Section 2.3.3. The valve positions shown on the P&IDs were assumed to be the normal positions during system operation. TMI-1 valving symbols are shown on ID-ISI-SS-001. All boundary for ISI systems and components are noted on the ISI Boundary Sketch.

1. Classification Documents

The document employed for system/component functional classification include:

- 10 CFR 50.55a, Codes and Standards – Sections 50.55a(c), (d), and (e), reference 10 CFR 50.2 and Regulatory Guide 1.26 for the classification of Quality Group A, and Quality Groups B and C components, respectively. 10 CFR 50.55a, Footnote 9, specifically invokes Regulatory Guide 1.26.

- 10 CFR 50.2, *Reactor Coolant Pressure Boundary Definition* – This section of the Code of Federal Regulations provides a detailed definition for components within the reactor coolant pressure boundary. In previous issues of The Code of Federal Regulations, this definition was provided in Section 50.2(v).

- Regulatory Guide 1.26, Revision 3, Quality Group Classifications and Standards for Water, Steam, and Radioactive Waste Containing Components of Nuclear Power Plants – This document provides criteria for the classification of Quality Group B, Quality Group C, and Quality Group D (typically non-classed) components. AmerGen has committed to Regulatory Guide 1.26, Revision 3 in the Quality Assurance Plan. References for functional classification of systems are primarily from Regulatory Guide 1.26; however, in the event that Regulatory Guide 1.26 does not include the applicable function(s), ANSI N18.2a-1975 references are employed.

- ANSI N18.2-1973, Nuclear Safety Criteria for the Design of Stationary Pressurized Water Reactor Plants – This document is a secondary reference in the event that Regulatory Guide 1.26 does not include the applicable function(s). In this case, ANSI N18.2-1973 references are utilized. TMI Unit 1 is not specifically committed to any requirements in ANSI N18.2a-1975.

- ANSI N18.2a-1975, Revision and Addendum to Nuclear Safety Criteria for the Design of Stationary Pressurized Water Reactor Plants – This document is utilized for guidance in cases where the criteria of Regulatory Guide 1.26 and/or ANSI N18.2-1973 are vague or incomplete. TMI Unit 1 is not specifically committed to any requirements in ANSI N18.2a-1975.

B. ISI Boundary Classification Process – ASME Section XI Application

The second phase of the ISI Boundary Classification process is the application of the examination requirements of ASME Section XI, detailed in subparagraphs IWB-1210, IWC-1210, IWD-1210, and IWF-1210, and the application of the exemptions of ASME Section XI, detailed in subparagraphs IWB-1220, IWC-1220, IWD-1220 and IWF-1230.

The application of ASME Section XI requirements for components included in the ISI Boundary Summaries of Section 4.1 is detailed in subparagraph IWA-1320:For ASME Class 1 components (Quality Group A) the requirements of Subsection IWB apply, for ASME Class 2 components (Quality Group B) the requirements of Subsection IWC apply, and for ASME Class 3 (Quality Group C) components the rules of Subsection IWD apply.

Specific ASME Section XI application information is detailed in Section 4.1 of this document under the Examination Category Application portion of each ISI Boundary Summary. The ISI Classifications are also shown on each of the ISI Color Coded Boundary Sketches (see Appendix A.)

1. Components Subject to Examination

Components (piping, pumps, valves, vessels, etc.) on the Boundary Sketches Appendix A which are subject to the examinations of IWB-2000 (per IWB-1210), IWC-2000 (per IWC-1210), or IWD-2000 (per IWD-1210) are summarized in each of the ISI Boundary Summaries under the subsection heading, Nonexempt Components. The supports of these components are also subject to the examinations of IWF-2000.

2. Components Exempt from Examination

Components within the ISI Boundary which are exempt from examination per IWB-1220, IWC-1220, or IWD-1220 and exempt from component support examination per IWF-1230 are summarized in each of the ISI Boundary Summaries under the subsection heading, Exempt Components. The summary cites the applicable ASME Section XI exemption. Supporting information for exemptions which are based on operating temperatures and pressures or system function is also included in this section of the ISI Boundary Summary.

3. ISI Classification Technical Positions

The Technical Positions in Section 5.0 have been developed in conjunction with this document to detail vague or missing information in ASME Section XI relating to the exemption of ASME Class 2 and Class 3 components from examination.

4. Abbreviations and Acronyms Used In This Document

The following abbreviations and acronyms are employed in this document:

- **CBD** – Classification Boundary Drawing.
- **NDE** – Non-Destructive Examination.
- **NNS** – Non-Nuclear Safety. This term is employed by ANSI N18.2-1973 and ANSI N18.2a-1975.
- **NPS** – Nominal Pipe Size.
- **P&ID** – Piping and Instrumentation Diagram.
- **GAI** – Gilbert Associates

4.0 ISI BOUNDARY SUMMARIES

For each of the ISI Boundary Sketches found to include ASME Class 1, Class 2, or Class 3 components, a summary or abstract of the pertinent classification information is included in Section 4.1.

The summaries of Section 4.1, Systems and Components Included in the ISI Program, provide the following general information:

- **SYSTEM** – Per the ISI Boundary Sketches
- **DRAWING NUMBER** – Per the ISI Boundary Sketches

The color-coded version of the applicable GAI flow diagram(s) identified in reference section is referred to as the ISI Boundary Sketch. The ISI Boundary Sketches have been color coded to identify the components subject to examination and those, which are exempt from examination. The color legend has been included on each sketch. The TMI Unit 1 ISI Boundary Sketches are included in Appendix A of this document.

The ISI Boundary Summaries provided in Section 4.1 of this document provides AmerGen's basis for application of Section XI examination exemption rules. These summaries also provide system function, modes of operation, examination category application, and references used to apply these rules for each ISI Boundary Sketch as noted below.

The basis for boundaries have been identified on Boundary Sketches in notes which appear on the sketches. Each change in code class indicated on the sketch has a reference to specific notes which identify the AmerGen basis for the boundary.

The following specific information is provided in the summaries:

I. SYSTEM FUNCTION

Provides brief descriptions of system functions as identified in appropriate sections of the TMI-1 Operations Plant Manual.

II. MODES OF OPERATION

Provides brief descriptions of system mode(s) of operation including normal or emergency if applicable.

III. EXAMINATION CATEGORY APPLICATION

Each ASME Class 1, Class 2, and Class 3 component included on the ISI drawing is subject to ASME Section XI requirements where the component is classified as non-exempt or exempt. The text of this section summarizes the ASME Section XI requirements and exemptions by referencing the Coding Designators on Drawings included in Appendix A. This section is organized by ASME Class, summarizing exempt components followed by non-exempt components.

IV. REFERENCES

Applicable references such as the FSAR, TMI Unit 1 Operations Manual, Drawings, and Technical Specifications are noted in this section. Specific references to Regulatory Guide use for boundary determination are found in the Boundary Sketches specific notes.

4.1

TMI UNIT 1

ISI BOUNDARY SUMMARIES

SYSTEMS INCLUDED

IN THE ISI PROGRAM

4.1.1

Main Steam System

(1D-ISI-FD-001)

System Function – The Main Steam System delivers steam from the Once Through Steam Generators (OTSGs) to the high-pressure and Main Feedwater pump turbines during startup, power operation, and when shutting down the unit. In the event of a station blackout, loss of Main Feedwater, loss of all four Reactor Coolant pumps, receipt of a high containment pressure signal or low OTSG level, the Main Steam System delivers steam as required to serve the Emergency Feedwater pump turbine. The Main Steam System also delivers steam to the gland seal steam system during startup.

In the event of a loss of partial main turbine load, the Main Steam System can dissipate all of the energy existent or produced in the Reactor Coolant System by relief to atmosphere through Main Steam safety valves and the atmospheric dump valves, or relieve through the condenser via the turbine bypass valves.

Modes of Operation

1. During normal operation the Main Steam System supplies steam from the OTSGs to the main turbine, main feed pump turbines, the gland seal steam system, and the relief valve post support heating system.

2. During emergency conditions the Main Steam System supplies steam to the turbine driven Emergency Feedwater Pump.

Examination Category Application

Class 2

Exempt Components – All components and component connections 4" nominal pipe size (NPS) or smaller are exempt as allowed by IWC-1222 (a) and (b).

Non-Exempt Components – All non-exempt components will be examined as required by Table IWC-2500-1.

Class 3

The Main Steam System supplies steam to operate the turbine driven Emergency Feedwater Pumps that supply water for Reactor Residual Heat Removal and therefore is classified as Class 3.

Exempt Components – All components 4" NPS or less are exempt from VT-3 examination requirements per IWD-1220(a).

Non-Exempt Components – Non-exempt components will be examined as required by Table IWD-2500-1.

References

1. Final Safety Analysis Report, Section 10.3

2. TMI-1 Operations Plant Manual Section G-3, Revision 6, Main Steam System

3. GAI Flow Diagrams
   302-011
   302-012
   302-032
   302-121
   302-719

4.1.2

River Water System

(1D-ISI-FD-002)

System Function

Reactor Building (RB) Emergency Cooling – The system provides cooling water to the Reactor Building Emergency Coolers during accident conditions.

Nuclear Service – This system supplies cooling water to the Nuclear Services Closed Cooling and Intermediate Closed Cooling heat exchangers.

Decay Heat River Water – This system supplies cooling water to the Decay Heat Service Coolers which are the heat sink for the Decay Heat Removal System.

Modes of Operation

See System Function.

Examination Category Application

All components are Class 3 and classified as Category D-B, except for a small portion of the system adjacent to the intermediate service coolers as discussed below under non-exempt categorized components.

Exempt Components

Reactor Building Emergency Cooling – All components and component connections 4" NPS or less are exempt per IWD-1220(a).

Nuclear Service – All components and component connections 4" NPS or less are exempt per IWD-1220(a).

Decay Heat River Water – All components and component connections 4" NPS or less are exempt per IWD-1220(a).

Non-Exempt Components

Reactor Building Emergency Cooling – All non-exempt components will be examined as required by Table IWD-2500-1.

Nuclear Service – All non-exempt components will be examined as required by Table IWD-2500-1.

Decay Heat River Water – All non-exempt components will be examined as required by Table IWD-2500-1.

Non Categorized Components

Nuclear Service – The Intermediate Cooling System does not perform functions as identified in IWD-1210. Therefore, the examination requirements of IWD-2000 do not apply. The non-categorized portion of this system services only the Intermediate Cooling System.

References

1. Final Safety Analysis Report, Sections 9.3, 9.6.1, 9.6.2, and 9.8.8

2. TMI-1 Operations Plant Manual

Section	Title
D-2	Nuclear Services River Water
D-1	Decay Heat River Water System
D-4	Reactor Building Emergency Cooling River Water

3. TMI-1 Pipe Line Specification SP-5661

4. GAI Flow Diagrams
   302-202
   302-203

4.1.3

Decay Heat Closed Cycle Cooling System

(1D-ISI-FD-003)

System Function – Provide cooling water to the Decay Heat Removal Coolers during shutdown and emergency operations. The system also provides cooling to the following:

1. Decay Heat Closed Cooling pump bearings
2. Decay Heat Removal pump motor and bearings
3. Building Spray pump motor and bearings
4. Makeup pump motor, gear reducer and bearings (MU-P1A and 1C only).

Modes of Operation

1. This system does not operate and remains on standby during normal plant operation.

2. This system operates with actuation of the Decay Heat Removal System either during normal plant shutdown conditions or during and after accident conditions.

Examination Category Application

Class 3

Exempt Components – All components and component connections 4" NPS or smaller are exempt. This exemption is allowed per IWD-1220(a).

Non-Exempt Components – All non-exempt components will be examined as required by Table IWD-2500-1.

References

1. Final Safety Analysis Report, Section 9.6

2. TMI-1 Operations Plant Manual, Section B-7, Decay Heat Closed Cooling System

3. GAI Flow Diagrams
   302-645

4.1.4

Core Flooding System

(1D-ISI-FD-004)

System Function – Flood the reactor core with borated water during a LOCA that reduces Reactor Coolant System pressure below 600 psig. This is a statically pressurized, self-actuating safety system, which cannot actuate when RCS pressure is above 600 psig.

Modes of Operation – This system performs an emergency core cooling function only. It is a statically pressurized, passive, self-actuating safety system. For the system to actuate, Reactor Coolant System pressure only needs to drop below 600 psig.

Examination Category Application

Class 1

Exempt Components – All components and component connections 1" NPS or less are exempt per IWB-1220(b).

Non-Exempt Components – All non-exempt components will be examined as required by Table IWB-2500-1.

Class 2

Exempt Components – This is a statically pressurized, passive safety injection system. Therefore, all components are exempt per IWC-1221(c).

Non-Exempt Components – Not applicable.

References

1. Final Safety Analysis Report, Section 6.1

2. TMI-1 Technical Specification, Sections 3.3 and 4.5.2

3. TMI-1 Operations Plant Manual, Section B-8, Core Flood System

4. GAI Flow Diagrams
   302-711

4.1.5

Decay Heat Removal System

(1D-ISI-FD-005)

System Functions – This system serves as an Emergency Core Cooling System (ECCS) during accident and post accident conditions. The system is also the principal source of heat removal from and boron control of the Reactor Coolant System once the reactor plant has been cooled below 250°F.

Modes of Operation

ECCS – (Emergency Core Cooling System)

1. Provides low-pressure safety injection to the reactor core from the Borated Water Storage Tank (BWST) during post-LOCA conditions.

2. Provides long term core cooling by recirculation of injection water from the Reactor Building Sump to the core through the normal Decay Heat Removal System (and Makeup and Purification System in piggyback mode).

Normal Operation

1. Provides residual heat removal from the reactor core after it has been cooled to less than 250°F by other sources.

2. Provides auxiliary spray to the pressurizer for Reactor Coolant System depressurization after cool-down below 250°F.

3. Maintain Reactor Coolant temperature during refueling activities and provides a means for filling and draining the fuel transfer canal.

Examination Category Application

Class 1

Exemptions – The 3/4" lines and associated components to LT-1033 through LT-1036 and the 3/4" line to DH-V51 are exempt on line size by IWB-1220(b).

Non-Exempt – All other Class 1 components are to be examined as required by Table IWB-2500-1.

Class 2

Exempt Components – All piping and associated components 4" nominal pipe size and smaller are exempt per IWC-1221(a) except for the piping downstream of the DH-V7A and B valves. Piping downstream of the DH-V7 valves is discussed in the non-exempt section for this system.

The piping between the reactor building sump and valves DH-V6A and B is buried in concrete or encased in welded steel guards. These components will be treated as exempt per IWC-1223.

Non-Exempt Components

DH-V7A and B to Makeup Pumps – This section of piping and components will be examined as required by Table IWC-2500-1 and Relief Request RR-00-04.

Decay Heat Removal Pumps to DH-V4A and B – This section of piping and components will be examined as required by Table IWC-2500-1 and Relief Request RR-00-04.

Remaining Non-Exempt Components

The remaining sections of the system not described above will be examined as required by Table IWC-2500-1.

References

1. Final Safety Analysis Report, Sections 6.1 and 9.5

2. TMI-1 Technical Specification, Sections 3.3, 3.4, and 4.5.2

3. TMI-1 Operations Plant Manual, Section B-6, Revision 7, Decay Heat Removal System

4. GAI Flow Diagrams
302-640
302-689

4.1.6

Condensate System

(1D-ISI-FD-008)

System Function – Within the Section XI Scope, the Main Condensate System provides a direct suction to the Emergency Feedwater Pumps from the Condensate Storage Tanks or directly from the Condenser hotwell.

Modes of Operation

Emergency

1. Provides direct suction supply to the Emergency Feedwater Pumps and cooling to the pump bearings.

Normal Operations

1. Provides suction water to the auxiliary boilers, the Main Feedwater System and water for pre-coating and backwashing of the powdex filters.

Examination Category Application

Class 3

Exempt Components – All components and component connections 4" NPS or less are exempt per IWD-1220(a).

Non-Exempt Components – Because this system serves a support role for Reactor Decay Heat Removal, it meets the examination requirements of IWD-1210. No exemptions can be applied except as described above. These components will be examined as required by Table IWD-2500-1.

References

1. Final Safety Analysis Report, Sections 10.4 and 10.6

2. TMI-1 Operations Plant Manual, Sections G-1 and I-1, Condensate System and Emergency Feedwater System

3. GAI Flow Diagrams
   302-101

4.1.7

Emergency Feedwater System

(1D-ISI-FD-009)

System Function – The Emergency Feedwater System (EFW) delivers water to the steam generators during loss of Main Feedwater, loss of four Reactor Coolant pumps, upon receipt of a high containment pressure signal or upon low OTSG water level. The purpose of the EFW system is: (1) removing decay heat, and (2) providing a smooth reactor coolant transition from Reactor Coolant pump operation into natural circulation. The EFW system is not required for plant startup, normal plant operation or normal shutdown. The EFW system is used only during emergency conditions and periodic testing.

Modes of Operation

1. The Emergency Feedwater System is a stand-by system which is not used during normal plant start-ups, shutdowns, or operation. The system is maintained in stand-by during plant operations and is automatically actuated upon loss of main feedwater, loss of all Reactor Coolant pumps, high containment pressure, or low OTSG level.

Examination Category Application

Class 2

Exempt Components – All components and component connections of 4" NPS or less are exempt. This exemption is allowed by IWC-1221(a).

Non-Exempt Components – All non-exempt components will be examined as required by Table IWC-2500-1.

Class 3

This system supports reactor residual heat removal and meets the examination requirements of IWD-1210.

Exempt Components – The components shown as exempt are related to instrumentation, bearing cooling, or drain and vent functions.

Non-Exempt Components – All non-exempt components will be examined as required by Table IWD-2500-1. The minimum recirculation lines (lines to EF-V22 and EF-V20A/B) are considered non-exempt because they are exposed to service flow conditions during surveillance testing and while in operation.

References

1. Final Safety Analysis Report, Section 10.6

2. TMI-1 Operations Plant Manual Section I-1, Emergency Feedwater System

3. GAI Flow Diagrams
   302-081
   302-082

4.1.8

Feedwater System

(1D-ISI-FD-009)

System Function – The Feedwater System maintains level in the OTSGs throughout all modes of normal plant operation. The system is not required for safe plant shutdown or maintaining the plant in the shutdown condition.

Modes of Operation – During normal operation the Feedwater System provides water to the OTSGs for conversion to steam.

Examination Category Application

Class 2

Exempt Components – All components and component connections 4" NPS or less are exempt. This exemption is allowed by IWC-1222(a) and (b).

Non-Exempt Components – All non-exempt components will be examined as required by Table IWC-2500-1.

References

1. Final Safety Analysis Report, Section 10.5

2. TMI-1 Operations Plant Manual Section G-2, Feedwater System

3. GAI Flow Diagrams
   302-081
   302-082

4.1.9

Nuclear Service Closed Cycle Cooling Water System

(1D-ISI-FD-010)

System Function – The Nuclear Services Closed Cooling System has the following functions:

- Circulates cooling water through 53 nuclear oriented component coolers.
- Normally maintains a continuous head on the Reactor Building Emergency Cooling Coils for leak detection.
- Normally pressurized by an instrument air supply at the surge tank to keep the piping inside containment for the Reactor Building emergency Cooling fan motor cooling at greater than design containment pressure. This prevents the NSCCW system from being a potential leak path from containment during a LOCA.
- Supplies makeup to the Control Building Chilled Water System.
- Provides containment isolation on certain ES signals.

The only Emergency Core Cooling System (ECCS), Decay Heat Removal (DHR), or Containment Heat Removal (CHR) systems cooled by this system are the Makeup and Purification and Reactor Building Emergency Cooling Systems. Makeup Pump 1B is cooled by this system but is not normally selected for ES actuation. Makeup Pumps 1A and 1C are normally ES selected and cooled by the Decay Heat Closed Cooling Water System, though they can be cooled by the NSCCW system under certain conditions. The NSCCW supports the Reactor Building Emergency Cooling System by providing cooling flow to the Reactor Building Emergency Cooling Fan Motors.

Modes of Operation

1. During normal operation this system removes heat from nuclear oriented components and transfers the heat to the Nuclear River Water System via heat exchangers NS-C-1A, NS-C-1B, NS-C-1C, and NS-C-1D. The Nuclear River Water System then transfers the heat to the Susquchanna River.

2. During emergency operation, the system removes heat from nuclear safety related components. Non-essential components are either automatically isolated by the ES system via NS-V-4, NS-V-15, and NS-V-35 or manually isolated via NS-V-32.

Examination Category Application

Operating conditions are less than design temperature and pressure of the Nuclear Services Closed Cycle Cooling Water System (175°F and 150 psig respectively).

Class 2

Exempt Components – Piping and components connected to penetrations 346 and 347 are exempt per IWC-1222(c).

Piping and components between the NS-V52A/B/C and NS-V53A/B/C valves are exempt per IWC-1221(a). Components attached to penetrations 421 and 422 are exempt per IWC-1222 (c). Components 4" NPS or less on the RB Emergency Cooler portion of the system are exempt per IWC-1221 (a).

Non-Exempt Components – The remaining portion of the system not discussed above serves a LOCA containment heat removal function and will be examined as required by Table IWC-2500-1.

Class 3

Exempt Components – Components isolable (by manual, check, or power operated valves) from portions of the system serving IWD-1210 components are considered to be Class 3 components. All components and component connections 4" NPS or smaller are exempt per IWD-1220(a).

Exempt Components – All components and component connections 4" NPS or smaller are exempt per IWD-1220(a). In addition all components meeting the requirements of IWD-1220(c) are exempt.

Non-Exempt Components – Components will be examined as required by Table IWD-2500-1.

Non-Categorized Components – Components which are isolable (manual or power operated valves) from the categorized portion of the system are not categorized. The requirements of IWD-2000 do not apply for these components.

References

1. Final Safety Analysis Report Sections 6.3 and 9.6.2.3

2. TMI-1 Operations Plant Manual Sections B-11, D-4, and L-1

3. TMI-1 Surveillance Procedure 1303-11.9, Reactor Building Emergency Cooling System

4. GAI Flow Diagrams
302-610

4.1.10

Control Building Chilled Water System

(1D-ISI-FD-011)

System Function – This system recirculates chilled water to the Control Building Air Handling Cooling Coils to maintain the Control Building temperature in a habitable condition and within required limits at all times.

Provides heat removal from the air supply to the Reactor Building Penetration Air Cooling System.

Maintains the pressure boundary for NSCCW System . CH-V-17 is NSR because it isolates the Chilled Water System from a safety grade Closed Cooling Water System.

Modes of Operation – This system is required to operate during all plant conditions by recirculating water for energy transfer (closed loop system).

Examination Category Application

Class 3

Exempt Components - Design temperature and pressure of this system is 45°F and 150 psig respectively. This system performs no residual heat removal (RHR), containment heat removal (CHR), or emergency core cooling system (ECCS) functions; therefore, the entire system is exempt per IWD-1220(c).

Non-Exempt Components – Not applicable.

References

1. Final Safety Analysis Report, Section 9.8.1

2. TMI-1 Operations Plant Manual, Section L-3, Control Building H&V System

3. NRC IE Bulletin 79-02/14 Piping Analysis Drawings (ME's)

4. GAI Flow Diagrams
   302-847

5. Calculation C-1101-826-5360-016, Appendix R Calculation

4.1.11

Reactor Building Spray System

(1D-ISI-FD-012)

System Function – The Reactor Building Spray System is designed to furnish building atmosphere cooling to limit post-accident building pressure to less than design value and to reduce the building pressure to nearly atmospheric. The system also provides a spray solution containing sodium hydroxide, which removes fission products from the building atmosphere and controls pH in the building sump for long term corrosion protection following a LOCA.

This system serves as an engineered safeguard system only and performs no normal plant operating function.

Modes of Operation

1. The system actuates spray at a reactor building pressure of 30 psig taking suction from the Borated Water Storage Tank and Sodium Hydroxide Tank simultaneously. Once these sources are depleted, the system draws suction from the Reactor Building Sump via the Decay Heat Removal Pump suction header.

Examination Category Application

Class 2

Exemptions – All components associated with reactor building penetrations 340, 350, and 351 are less than 4" NPS and are, therefore, exempt per IWC-1221(a).

Components downstream of valves BS-V1A and B are in the open-ended portion of the system which is normally drained during plant operation. This portion of the system is exempt per IWC-1221(d).

All other components listed as exempt are 4" NPS or less and exempt per IWC-1221(a).

Non-Exempt Components

From the 14" x 10" Reducer Upstream, to the Decay Heat Removal System – This section of the system will be examined as required by Table IWC-2500-1.

From the 14" x 10" Reducer, Downstream to BS-V1A/B and BS-V59 upstream to the BWST – This section of the system will be examined as required by Table IWC-2500-1, and as discussed in Section 3.3, "Augmented Examinations Requirements."

Valve BS-V59 Upstream to the BWST – This section of the system will be examined per Table IWC-2500-1, and as discussed in Section 3.3, "Augmented Examinations Requirements."

References

1. Final Safety Analysis Report, Section 6.2

2. TMI-1 Technical Specification, Sections 3.3 and 4.5.3

3. TMI-1 Operations Plant Manual, Section B-9 Revision 2, Reactor Building Spray Systems

4. GAI Flow Diagrams
302-712

4.1.12

Penetration Pressurization and Hydrogen Recombiner Systems

(1D-ISI-FD-015)

System Functions

Penetration Pressurization System – This system blocks any leakage that might occur from sleeves penetrating containment during normal operation by pressurizing certain mechanical penetrations with air at a pressure in excess of 50.6 psig. (Refer to FSAR Section 5.3.5.1).

Hydrogen Recombiner System – This system removes post-LOCA containment air mixed with hydrogen, recombines the hydrogen with oxygen, and exhausts this processed air back into containment. The leak rate portion of the system is used only during containment leak rate testing.

Modes of Operation

Penetration Pressurization System – Only equipment Hatch Flange "o" rings and electrical penetrations (with epoxy seals) to 30 psig with N^2.

Hydrogen Recombiner System – The hydrogen recombiner system will only operate during post-LOCA conditions. The leak rate system will only operate during containment leak rate testing.

Examination Category Application

Exempt Components

Penetration Pressurization System – All components are less than 4" NPS. All components are exempt per IWC-1222(a)and IWC-1222(b).

Hydrogen Recombiner System – Design temperature and pressure are 120°F and 63.3 psig respectively from the reactor building penetrations through the outboard portion of the system. Because none of this system or the leak rate system operates during any normal mode of operation, all components are exempt per IWC-1222(c).

Non-Exempt Components – Not Applicable.

References

1. Final Safety Analysis Report Sections, 5.3.5 and 6.5

2. TMI-1 Operations Plant Manual, Section C-8, Hydrogen Recombiner/Analyzer

3. TMI-1 Pipe Line Specifications SP-5544 and SP-5661

4. GAI Flow Diagrams
   302-707
   302-722
   302-725

4.1.13

Makeup and Purification System (Letdown Portion)

(1D-ISI-FD-016)

System Function – This system serves to purify (filter) reactor coolant, to control RCS boron concentration and reactor water chemistry, and to vent gases from the Reactor Coolant System. The letdown portion of the system automatically closes when reactor coolant pressure reduces below 1600 psig or reactor building pressure exceeds 4 psig. The reactor coolant pump seal injection return line automatically closes when reactor building pressure reaches 30 psig. This portion of the system serves no function in Emergency Core Cooling System (ECCS), Containment Heat Removal (CHR), Residual Heat Removal (RHR), or Reactor Building Atmosphere Cleanup.

Modes of Operation

1. The system is operable for normal reactor conditions and draws directly from the Reactor Coolant System piping through the Makeup Tank or from the Reactor Coolant pump seals. A hydrogen overpressure is maintained on the Makeup Tank.

2. Numerous minor system line-up changes can be made to allow for RCS volume control or reactivity and chemistry changes. A portion of the system serves to provide a source of concentrated boric acid for the RCS should the BWST become unavailable.

3. If the letdown line were to rupture in the Auxiliary Building, upstream of the block orifice, the resulting high letdown temperature would automatically initiate closing the upstream RB isolation valves.

Examination Category Application

Class 1

Exempt Components – All exempt components and piping upstream valves MU-V2A and B are 1 inch NPS or smaller and are exempt based on IWB-1220(b).

All components and piping upstream MU-V38 are 1 inch NPS or smaller and are therefore, exempt per IWB-1220(b).

Failure of piping and components between the reactor coolant pump seals and the MU-V33 valves would be within the capabilities of the Makeup System. This section of the system is, therefore, exempt per IWB-1220(a).

Non-Exempt Components – All other Class 1 components are to be examined as required by Table IWB-2500-1.

Class 2

Exempt components – The letdown portion of the makeup and purification system performs no RHR, ECCS, or CHR functions. All Class 2 components are exempt per IWC-1222(a) and IWC-1222(b) because the NPS is 4" or less for all components.

Non-Exempt Components – Not Applicable.

Class 3

Category D-A

Exempt Components – Components isolable (by manual, check, relief, or power operated valves) from portions of the system not meeting IWD-1210 criteria are considered to be Class 3 components. All components and component connections 4" NPS or smaller are exempt per IWD-1220(a).

Non-Exempt Components – Not Applicable.

Non-Categorized Components – Components which are isolable (by manual, check, relief, or power operated valves) from portions of the system serving Class 3 functions are not categorized. The requirements of IWD-2000 do not apply for these components.

References

1. Final Safety Analysis Report, Sections 6.1 and 9.1

2. TMI-1 Operations Plant Manual, Section B-5, Revision 6

3. GAI Flow Diagrams
302-660

4.1.14

Makeup and Purification System (Makeup Portion)

(1D-ISI-FD-017)

System Function – This system serves both normal reactor operation and ECCS functions. The system provides high pressure injection of borated water from the BWST to the RCS when RCS pressure decreases below 1600 psig or reactor building pressure exceeds 4 psig. The system may also provide long term core cooling in the piggyback mode by drawing injection water from the Reactor Building sump through the Decay Heat Removal System.

During normal operation, the system provides RCS makeup water and reactor coolant pump seal injection water. The system also serves chemistry, boron concentration, and RCS inventory control functions during normal operation.

Modes of Operation

1. One Makeup Pump (normally MU-P1B) draws suction from MU-T1 and provides injection water to the reactor coolant pump seals and the discharge piping of RC-P1B during normal operation. MU-P1A or 1C may be utilized during normal operation when required for this function.

2. Two Makeup Pumps would draw suction from the BWST and provide high pressure injection (HPI) to the 4 reactor coolant pump discharge lines during emergency conditions. Reactor coolant pump seal injection would remain operational during HPI unless Reactor Building pressure reaches 30 psig at which time automatic isolation occurs (manual isolation can occur prior to this time).

   Should the BWST supply become exhausted, injection water would be supplied from the Reactor Building Sump through the Decay Heat Removal System operating in the piggyback mode (the Makeup Pumps taking suction from the discharge of the Decay Heat Removal Pumps).

3. Numerous minor system line-up changes can be made to allow for volume control or reactivity and chemistry changes. A portion of the system serves to provide a source of concentrated boric acid for the RCS should the BWST become unavailable.

Examination Category Application

Class 1

Exempt Components – All exemptions are on components 1" NPS and smaller based on IWB-1220(b).

Non-Exempt Components – All non-exempt components will be examined per IWB-2000.

Class 2

Exempt Components – Piping and components downstream of valves MU-V17, MU-V92, MU-V217, MU-V90, MU-V32, and MU-V205 are considered outside the high pressure safety injection system because of isolation or capability for isolation from the normal HPI flow path. Valve MU-V205 is a 1" NPS, normally open valve set for approximately 3.5 gpm without automatic closure capability; but it can be closed manually. All components or connections to components in this portion of the system are 4" NPS or less and exempt per IWC-1222(a).

Piping between valves MU-V78 and MU-V79 and between MU-V76A and MU-V76B are not part of the HPI system; therefore, it is exempt per IWC-1222(a).

The remaining exempt components within the HPI portion of the system are1-1/2" NPS or less and exempt per IWC-1221(b).

Non-Exempt Components – The makeup pumps, piping, and components downstream of the pumps are considered part of the HPI system and are to be examined as required by Table IWC-2500-1.

Piping and components upstream of the makeup pumps are considered part of the HPI system. The components in this portion of the system will be examined per Table IWC-2500-1 and as discussed in Section 3.3, "Augmented Examinations Requirements."

Class 3

Exempt Components – All components and component connection 4" NPS or smaller are exempt per IWD-1220(a).

Non-Exempt Components – Not Applicable.

Non-Categorized Components – Components not meeting IWD-1210 criteria are not categorized. The requirements of IWD-2000 do not apply for these components.

References

1. Final Safety Analysis Report, Sections 6.1 and 9.1

2. TMI-1 Operations Plant Manual, Section B-5, Revision 6

3. TMI-1 Technical Specifications, Sections 3.3 and 4.5.2.

4. GAI Flow Diagrams
   302-661

4.1.15

Spent Fuel Cooling System

(1D-ISI-FD-018)

System Function – Circulate spent fuel pool water to remove heat generated from irradiated spent fuel stored in the pools. The system may also be used to fill and drain the fuel transfer canal and cask loading pit. The system may be used in conjunction with the Liquid Waste Disposal system for purification of spent fuel pool, fuel transfer canal, and borated water storage tank water.

Modes of Operation

1. The system recirculates water as necessary to perform the above listed functions during all modes of plant operation.

Examination Category Application

Class 2

Exempt Components – Components connected to penetration 304 are used during refueling only (filling, recirculating, and draining). Operating temperature and pressure are normally 135°F and less than 100 psig respectively. These components are exempt per IWC-1222(c).

The fuel transfer tubes and connected components are open for operation during refueling activities only. Under non-accident conditions, the pressure is the static head pressure of the transfer and spent fuel pools while operating temperature is normally 135°F or less. Under accident conditions, the operating temperature and pressure could be the same as the Reactor Building Containment. These components are exempt per IWC-1222(c).

Non-Exempt Components – Valve SF-V19 and the piping upstream are a continuation of the BWST and will be examined as required by Table IWC-2500-1.

Class 3

Exempt Components – The entire system normally operates at temperatures of 135°F or less and pressures of less than 100 psig. The entire system is exempt per IWD-1220(c).

Non-Exempt Components – Not Applicable.

References

1. Final Safety Analysis Report, Section 9.4

2. TMI-1 Operations Plant Manual, Section C-1

3. Pipe Lines Specifications 5544 and 5661

4. GAI Flow Diagrams
   302-630

4.1.16

Reactor Coolant System

(1D-ISI-FD-019)

System Function – The Reactor Coolant System (RCS) provides for the transfer of thermal energy from the reactor core to the once through steam generators (OTSGs). The boundary also serves to separate fission products from the environment.

Modes of Operation

1. Reactor coolant is pumped through the reactor core where it is heated. It is then circulated through the OTSGs where heat is removed for the production of secondary side steam. The cooled reactor coolant is then pumped through the reactor coolant pumps back into the core for continuation of the cycle.

2. The system is designed such that upon loss of power to all reactor coolant pumps, cooling is maintained by natural circulation.

Examination Category Application

Class 1

Exempt Components – Failure of the reactor coolant pump #1 seal leak off line is within the capabilities of the normal makeup system. This portion of the system is exempt per IWB-1220(a). All other components are exempt by size as allowed by IWB-1220(b).

Non-Exempt Components – Components in this category will be examined as required by Table IWB-2500-1.

Class 2

Exempt Components – See Decay Heat Removal System.

Non-Exempt components – The secondary side of the OTSGs is shown on the Main Steam System and will be examined as required by Table IWC-2500-1.

Class 3

See Intermediate Cooling and Nuclear Services Systems.

References

1. Final Safety Analysis Report, Section 4.2

2. System Design Basis Document for Reactor Coolant System, SDBD-TI-220

3. GAI Flow Diagrams
   302-650
   302-651

4.1.17

Chemical Sampling and OTSG Chemical Cleaning Systems

(1D-ISI-FD-020)

System Function

Chemical Sampling System – The Chemical Sampling System provides a means for obtaining pressurizer, reactor coolant, letdown, and OTSG secondary side samples in the auxiliary building during plant operation.

OTSG Chemical Cleaning System – Components connected to penetration 353 serve as a means to transport reactor building sump liquid waste to the auxiliary building sump via gravity for waste processing. The remainder of the components are blind flanged on both ends of the process piping and serve no plant operating or emergency functions.

Modes of Operation

1. Normal operation of the Chemical Sampling System is to provide a means for manual collection of chemical samples as needed for analysis.

2. Components connected to penetration 353 provide a gravity feed path from the reactor building sump to the auxiliary building sump for waste processing.

3. The remaining components do not function during plant operations (including emergencies).

Examination Category Application

Class 1

Exempt Components – All components are less than 1" NPS and exempt per IWB-1220 (b).

Non-Exempt Components – Not Applicable.

Class 2

Exempt Components – Design temperature and pressure for components connected to penetration 353 is 150°F and 75 psig respectively. Operating conditions are expected to be equivalent to reactor building atmosphere which will be less than design. These components are exempt per IWC-1222(c).

Design temperature and pressure for components connected to penetration 105 is 137°F and 150 psig respectively. This system is not normally in operation. Therefore, these components are exempt per IWC-1222(c). All remaining components are 4" NPS or less and are exempt per IWC-1222(a).

Non-Exempt Components - Not Applicable

References

1. Final Safety Analysis Report, Section 9.2.2

2. Drawing SS-521-036

3. GAI Flow Diagrams
   C-302-719
   C-302-571
   C-302-196

4.1.18

Chemical Addition and Liquid Waste Disposal System

(1D-ISI-FD-021)

System Function – The components associated with penetration 307 are part of the reclaimed water system. This system provides clean demineralized water to various plant locations for various plant uses.

The remaining portion of the system is used for mixing, storing, and pumping concentrated boric acid solution to the Reactor Coolant System, core flood tanks, spent fuel storage pools, and borated water storage tank (BWST).

Modes of Operation

1. Components associated with penetration 307 are used on an as needed basis when low pressure/temperature (design parameters 100°F and 150 psig) demineralized water is needed.

2. The remaining portion of the system is operated to supply a concentrated boric acid mixture to various plant locations as necessary during normal plant conditions and serves as a second source of concentrated boric acid should the BWST become unavailable.

Examination Category Application

Class 2

Exempt Components – All components are less than 4" NPS and exempt per IWD-1222(a) and IWD-1222(b).

Non-Exempt Components – Not Applicable.

Class 3

Exempt Components – All components are less than 4" NPS and are exempt per IWD-1220(a).

Non-Exempt Components – Not Applicable.

References

1. TMI-1 Operations Plant Manual

Section	Title
E-2	Waste Disposal Liquid System
C-2	Chemical Additional Nuclear System
C-6	Reclaimed Water System

2. Core Operation Limits Report (COLR)

3. GAI Flow Diagrams
   302-670
   302-692
   302-669

4.1.19

Intermediate Cooling System

(1D-ISI-FD-022)

System Function – The Intermediate Closed Cooling Water System is designed to provide cooling water for components in the reactor building, specifically: letdown coolers, reactor coolant pump thermal barriers, reactor coolant drain tank coolers, and control rod drive cooling coils. The system is not an engineered safeguards system and will isolate on certain ES signals; however, it is vital to normal plant operation.

Modes of Operation

1. This system cools components during normal plant operating conditions only.

Examination Category Application

Class 2

Exempt Components – The entire system normally operates at less than 200°F and 275 psig. Therefore, this system is exempt per IWC-1222(c).

Non-Exempt Components – Not Applicable.

Class 3

No components meet the examination requirements of IWD-1210; therefore, the examination requirements of IWD-2000 do not apply.

References

1. Final Safety Analysis Report, Section 9.3
2. TMI-1 Operations Plant Manual, Section B-10, Intermediate Closed Cooling Water System
3. Piping Analysis Drawings, ME-151, 181, ME-54, and ME-149
4. GAI Flow Diagrams
   302-620

4.1.20

Hydrogen Purge System and Miscellaneous Penetrations

(1D-ISI-FD-023)

System Function

Reactor Ventilation System (Reactor Building Purge) – This system is not normally operated during normal reactor operation. The system is operated in accordance with Technical Specification 3.6 and the System Operating Procedure.

The function of this system is to provide filtered outside air to the reactor building and exhaust the Reactor Building atmosphere to the Unit 1 vent through a filtered and monitored path.

Hydrogen Purge System – This system does not operate during normal reactor operation or shutdown. This system allows controlled venting of combustible reactor building gases during post-LOCA conditions.

All Remaining Systems – The remaining systems serve no role in RHR, ECCS, or CHR systems.

Modes of Operation

Reactor Building Purge

Outside air is supplied to the Reactor Building (RB) through valves AH-V1D and AH-V1C. RB air is exhausted from the RB through valves AH-V1B and AH-V1A.

Hydrogen Purge System

Reactor building gases are exhausted from the reactor building duct work and exhausted to the Unit 1 vent through this system.

Examination Category Application

Class 2

Exempt Components

1. The Reactor Building Purge System operating temperatures and pressures are the same as the containment vessel, 110°F and 1.0 psig. It should be noted that Tech Spec 3.17.1 requires that the average Reactor building temperature not exceed 130°F. This system is, therefore, exempt per IWC-1222(c).

2. Design temperature and pressure for the portion of hydrogen purge system downstream of valve HP-V6 is 120°F and 5 psig. Therefore, this portion is exempt per IWC-1222(c).

4. All remaining exempt components are 4" NPS or less and exempt per IWC-1222(a) and IWC-1222(b).

Non-Exempt Components

The only non-exempt components are in the Hydrogen Purge System upstream of valve HP-V6. During normal conditions, this portion of the system is exposed to containment conditions (<130°F and <1 psig). When required to operate, this system could be exposed to a post-LOCA environment (281°F and 55 psig).

A sound engineering position could be developed to exempt this portion of the system per IWC-1220(c) but is not being pursued. No welds in this system are required to be examined per Table IWC-2500-1 category C-F-1 or C-F-2 because the piping is 6" schedule 40 or 40S which is less than .375" wall thickness. One additional weld will have to be examined each ten years by not exempting this system. Reference augmented progam.

References

1. Final Safety Analysis Report Sections 5.2.2.4.3, 5.3.3, and 5.6.3

2. TMI-1 Operations Plant Manual, Section L-1, Reactor Building Heating and Ventilation System

3. GAI Flow Diagrams
   C-302-706
   E-302-231
   C-302-720
   C-302-694
   C-302-690
   C-302-674
   C-302-271
   C-302-721
   C-302-631
   C-302-706

4. TMI-1 Technical Specification 3.6

SECTION 5.0

TMI UNIT 1

ISI CLASSIFICATION

TECHNICAL POSITIONS

TECHNICAL POSITION NUMBER: 1

COMPONENT IDENTIFICATION

ASME Class:	Class 3
References:	Unit 1 ISI Boundary Sketch ID-ISI-FD-010
Description:	Code Required Test Procedure

REGULATORY AND TECHNICAL SPECIFICATION REQUIREMENTS

Code required test pressures.

POSITION

The safety function of RR-V6 is to throttle closed to maintain 60 psig in the Reactor Building Emergency Cooling Coils. This is to ensure that pressure in the Reactor Building Emergency Cooling Coils is higher than Reactor Building design pressure such that any leaking radioactive vapor or liquid to pass into the cooling coils and from there into the river. During a previous hydrostatic test of the Reactor Building Emergency Cooling System, it was not possible to reach the required test pressure of 165 psig because seat leakage of RR-V6 was greater than the 30 gpm capacity of the hydrostatic test pump. RR-V6 is a 10" Fisher butterfly control valve. Surveillance Procedure (SP) 1303-11.9 verifies a 60 psig back pressure with one pump and then with two pumps running each refueling outage. RR-V6's seat leakage is not important for its safety function. RR-V6 is located very near the concrete floor in the Intermediate Building. From RR-V6, the piping goes underground to the Mechanical Draft Cooling Tower. There is no other shutoff valve downstream of RR-V6. Upstream of RR-V6 are the outlet valves outlet valves outside the Reactor Building, RR-V4A/B/C/D. These valves are tight closing gate valves and are considered shutoff valves. The 1995 Edition, 1996 Addenda of ASME Section XI, IWD-5222(e) states, "For open ended portions of discharge lines beyond the last shutoff valve in non-closed systems (e.g., service water systems), confirmation of adequate flow during system operation shall be acceptable in lieu of system hydrostatic test." RR-V6 does not need to be leak tight to fulfill its safety function and is not considered a shutoff valve. SP 1303-11.9 verifies accident design flow rate through the coolers (5340 gpm for RR-P1A/B.) It is concluded that this test along with the performance of a VT-2 leakage exam of the affected piping will assure that the pressure retaining capability, structural integrity and leaktightness of this piping is maintained.

This clarification is included to document our interpretation of the Code in considering RR-V4A/B/C/D as the first shutoff valve referenced in IWD-5222(e).

SECTION 6.0

TMI UNIT 1

REFERENCES

6.0 REFERENCES

1. 10 CFR 50, Code of Federal Regulations.

2. Regulatory Guide 1.14, Reactor Coolant Pump Flywheel Integrity, Revision 1.

3. Regulatory Guide 1.26, Quality Group Classifications and Standards, Revision 3.

4. NUREG-0737, Clarification of TMI Action Plan Requirements, dated November 1980.

5. ANSI N18.2-1973, Nuclear Safety Criteria for the Design of Stationary Pressurized Water Reactor Plants.

6. ANSI N18.2a-1975, Revision and Addendum to Nuclear Safety Criteria for the Design of Stationary Pressurized Water Reactor Plants.

7. TMI Unit 1 Updated Final Safety Analysis Report.

8. TMI Unit 1 Technical Specifications.

9. ASME Boiler and Pressure Vessel Code, Section XI, Rules For In-service Inspection of Nuclear Power Plant Components, 1995 Edition, 1996 Addenda.

10. ASME Boiler and Pressure Vessel Code, Section XI, Rules For In-service Inspection of Nuclear Power Plant Components, 1992 Edition through the 1992 Addendum.

11. TMI-1 Operations Plant Manual.

12. TMI Unit 1, Operational Quality Assurance Plan (1000-PLN-7200.01).