GE Nuclear Energy

175 Curtner Ave.
San Jose, CA 95125

NEDC 33036
Revision B
Class II
July 2001

OPTION 2 PILOT PROGRAM FOR QUAD CITIES

Boiling Water Reactor Owners' Group (BWROG)

DRAFT

Principal Contributors:

General Electric
ERIN Engineering

Approval:

R. A. Hill
BWROG Project Manager

IMPORTANT NOTICE REGARDING CONTENTS OF THIS REPORT
Please Read Carefully

The only undertakings of General Electric Company (GE) respecting information in this document are contained in the contract between the Boiling Water Reactors Owners' Group (BWROG) and GE, as identified in the respective utilities' BWROG Standing Purchase Order for the performance of the work described herein, and nothing in this document shall be construed as changing those individual contracts. The use of this information, except as defined by said contracts, or for any purpose other than that for which it is intended, is not authorized, and with respect to any other unauthorized use, neither GE, nor any of the contributors to this document makes any representation or warranty, and assumes no liability as to the completeness, accuracy, or usefulness of the information contained in this document.

EXECUTIVE SUMMARY

The regulations of the U.S. Nuclear Regulatory Commission (NRC), 10 CFR Parts 21, 50, and 100, contain special treatment requirements that impose controls intended to ensure the quality of structures, systems, and components (SSCs) that are safety-related, important to safety, or otherwise within the scope of the regulations. These special treatment requirements go beyond normal commercial and industrial practices, and include quality assurance (QA) requirements, environmental and seismic qualification requirements, inspection and testing requirements, and performance monitoring requirements.

The NRC has proposed a new regulation, 10CFR50.69 "Option 2", which, when issued, will allow licensees to establish special treatment requirements for SSCs based on safety significance in combination with the historic Design Basis Accident approach. As the implementation of 10 CFR 50.69 would be voluntary, the Boiling Water Reactors Owners Group (BWROG) initiated a pilot

program to evaluate the benefits and drawbacks of adopting this new proposed regulation. Quad Cities (BWR/3, Mark I) has been selected as the pilot plant for this demonstration. The Nuclear Energy Institute (NEI) has drafted guidelines (NEI 00-04) to be used for implementing 10 CFR 50.69 and the BWROG Option 2 pilot uses these guidelines for the evaluation. This report documents the result of this pilot program.

The BWROG pilot selected three representative BWR systems and a single pilot plant for evaluating the benefits of the proposed regulation and "proof testing" the NEI guidelines. For each of the three systems, system functions were identified and their safety significance evaluated using the existing Quad Cities Probabilistic Risk Assessment (PRA) and other existing risk studies. SSCs were identified and assigned to specific system functions. SSCs were then categorized according to a two by two matrix, based on their categorization as safety related or non-safety related and safety significant (i.e., risk significant) or low safety significant (i.e., non-risk significant). The applicability of the special treatment regulations to those components was then established and an assessment performed to identify the potential special treatment reductions for safety related/low safety significant (RISC 3) SSCs and increased special treatment requirements for non safety related/safety significant (RISC 2) SSCs.

The pilot program included the following systems of the Quad Cities Nuclear Plant:

- Core Spray System
- Standby Gas Treatment System
- Feedwater System

Table E.S-1 provides the overall conclusions from the categorization process according to the NEI Guideline, NEI 00-004, for each system and each function as input to the IDP. Table ES-1 summarizes the following for each of the three pilot systems:

- Functions
- Safety Significance Assessment for each of the risk contributors (e.g., internal events fire, seismic, etc.)
- Overall Safety Significance recommendation to the IDP based solely on the PRA insights and the guidance from NEI 00-04

Based on the risk metrics defined in the NEI Guideline, the pilot categorization process concluded that all identified functions for the Standby Gas Treatment System are candidates to be categorized as low safety significant (LSS). The Core Spray System functions are also candidates to be categorized as being LSS except for the pressure isolation function (i.e., containment isolation valves) and the RPV boundary, which are categorized as having a high safety significance. The Feedwater system was found to be a candidate to be categorized as safety significant for its functions of RPV make-up, containment isolation, RPV boundary integrity, flow path for HPCI, SSMP, RCIC, and RWCU, and Feedwater regulation.

From this pilot project, the following special treatment regulations were identified as providing viable candidates for exemptions.

50.49	Environmental qualification
50.54	Conditions of licenses (in reference to Quality Assurance Programs only)
50.55a	Codes and standards
50.59	Changes, Tests and Experiments
50.65	Monitoring effectiveness of maintenance
50.72	Reporting

50.73	Licensee Event Report System
Appendix B	Quality Assurance
Part 21	Reporting of defects and noncompliance
10 CFR 100	Site Criteria (Seismic)

Although it was determined that there was insufficient information available to quantify the cost-benefits of adopting 10 CFR 50.69, there did seem to be sufficient evidence to allow continued effort in pursuing this option, and the draft NEI Guidelines provide an effective tool for categorization of these components.

The Option 2 process has specific goals relating to the "special treatment" aspects of the regulations. The regulations themselves are not being modified. Therefore, for safety-related systems determined to be of low safety significance, these systems will not be removed from the plant or from the regulations. Similarly, for those non-safety related systems found to be safety significant, these systems will not be added to the Technical Specifications. For both groups of systems, changes in special requirements may occur as a result of their assignment to RISC 3 or RISC 2, respectively.

Table ES-1
SAFETY SIGNIFICANCE SUMMARY BY SYSTEM, FUNCTION, AND ASSESSMENT CHAR

System Component	Function	Assessment Characteristic				
		Internal Events PRA[1]	Fire Events PRA	Seismic Margins	Other External Events Screening	Shutdow
Core Spray	RPV Injection	LSS	LSS	LSS	LSS	LSS
	Containment Isolation/RPV Boundary	HSS/LSS	LSS[2]/ LSS	LSS/LSS	LSS/LSS	HSS/HS
	Spray Distribution	LSS	LSS[2]	LSS	LSS	LSS
	Debris Retention	LSS	LSS[2]	LSS	LSS	LSS
	Flood Prevention	LSS	LSS[2]	LSS	LSS	LSS
	Keep-Fill	LSS	LSS[2]	LSS	LSS	LSS
	Containment Flooding	LSS	LSS[2]	LSS	LSS	LSS
SBGTS	Filter Effluent Release	LSS	LSS	LSS	LSS	LSS
	Maintain Negative Pressure in RB	LSS	LSS	LSS	LSS	LSS
	Containment Vent	LSS	LSS	LSS	LSS	LSS

Table ES-1

SAFETY SIGNIFICANCE SUMMARY BY SYSTEM, FUNCTION, AND ASSESSMENT CHARACTERISTICS (CONTINUED)

System Component	Function	Assessment Characteristic				
		Internal Events PRA[1]	Fire Events PRA	Seismic Margins	Other External Events Screening	Shutdow
Feedwater	RPV Make-Up	HSS	LSS	LSS	LSS	LSS
	Containment Isolation/RPV Boundary	HSS/LSS	LSS/LSS	LSS/LSS	LSS/LSS	HSS/HS
	HPCI, RCIC, SSMP, RWCU Flow Paths	HSS	LSS	LSS	LSS	HSS
	Zinc and H_2 Flow Path to RPV	LSS	LSS	LSS	LSS	LSS
	High Pressure FW Heating	LSS	LSS	LSS	LSS	LSS
	Low Pressure FW Heating	LSS	LSS	LSS	LSS	LSS
	FW Flow Regulation	HSS[3]	LSS	LSS	LSS	LSS
	Flood Prevention	LSS	LSS	LSS	LSS	LSS

Legend

HSS = Safety Significant

LSS = Low Safety Significance

Notes to Table ES-1:

(1) May include determination based on: (1) PRA importance; or (2) complicated initiating event; or (3) lack of defense-in-depth

(2) The determination of low safety significance is determined by correspondence with the internal events evaluation. The fire risk evaluation did not identify any quantitative impacts on the NEI 00-04 risk metrics associated with this function.

(3) The determination of safety significance for the feedwater flow regulation function is based solely on the single criteria of whether a complicated initiating event may result from the complete failure of the function.

TABLE OF CONTENTS

Page

IMPORTANT NOTICE REGARDING CONTENTS OF THIS REPORT i
EXECUTIVE SUMMARY ii
TABLE OF CONTENTS viii
ACRONYMS AND ABBREVIATIONS xv
1. INTRODUCTION 1-1
1.1 OVERVIEW 1-1
1.2 PURPOSE 1-3
1.3 SCOPE 1-4
1.4 DEFINITIONS 1-4
1.5 REPORT ORGANIZATION 1-7
2. RISK-INFORMED CATEGORIZATION PROCESS 2-1
2.1 GUIDING PRINCIPLES 2-1
2.2 CATEGORIZATION PROCESS STEPS 2-2
3. ASSEMBLY OF PLANT SPECIFIC RISK INFORMATION 3-1
3.1 Available and Documented Resources to Support Categorization Process 3-1
3.1.1 Internal Events PRA 3-2
3.1.2 Fire PRA 3-7
3.1.3 Seismic Margin Assessment 3-9
3.1.4 IPEEE for Other External Events 3-9
3.1.5 Shutdown 3-10
3.2 BASIS FOR USE OF PRA INFORMATION 3-12
3.2.1 Internal Events PRA 3-12
3.2.2 Fire PRA 3-13
3.2.3 Seismic Margin Study 3-14
3.2.4 Other External Events 3-14

3.2.5 Shutdown Events 3-15
3.3 RESULTS OF INDEPENDENT PEER REVIEW 3-15
3.3.1 Internal Events PRA 3-15
3.3.2 Fire Events PRA Review 3-24
3.3.3 Seismic Margin 3-24
3.3.4 Other External Events 3-24
3.3.5 Shutdown Events 3-24
3.4 IMPLEMENTATION OF QUAD CITIES RISK-INFORMED CATEGORIZATION 3-26
3.4.1 Core Spray 3-36
3.4.2 Standby Gas Treatment 3-42
3.4.3 Feedwater 3-46
3.5 SUMMARY OF INFORMATION GATHERING TO SUPPORT CLASSIFICATION- 3-55
3.6 RISK MEASURES AND GUIDELINES FOR CATEGORIZATION 3-60
4. COMPILATION OF RISK INSIGHTS AND SAFETY SIGNIFICANT ATTRIBUTES 4-1
4.1 INTERNAL EVENTS ASSESSMENT 4-1
4.1.1 Core Spray 4-5
4.1.2 Standby Gas Treatment System 4-28
4.1.3 Feedwater System 4-34
4.2 FIRE ASSESSMENT 4-51
4.2.1 Core Spray System 4-51
4.2.2 Standby Gas Treatment System 4-59
4.2.3 Feedwater System 4-61
4.3 SEISMIC ASSESSMENT 4-63
4.3.1 Core Spray System 4-64
4.3.2 Standby Gas Treatment System 4-65
4.3.3 Feedwater System 4-65

4.4 OTHER EXTERNAL HAZARD ASSESSMENT 4-65
4.4.1 Core Spray System 4-67
4.4.2 Standby Gas Treatment System 4-68
4.4.3 Feedwater System 4-68
4.5 SHUTDOWN ASSESSMENT 4-69
4.5.1 Core Spray System 4-72
4.5.2 Standby Gas Treatment System 4-78
4.5.3 Feedwater System 4-82
4.6 Sensitivity Analysis 4-87
4.6.1 Base Case for Sensitivity Analysis 4-92
4.6.2 Sensitivity to HEPs 4-93
4.6.3 Sensitivity to Common Cause 4-94
4.6.4 Sensitivity to Elimination of Maintenance Unavailability 4-95
4.6.5 Sensitivity to Random Component Failure Probabilities 4-96
4.6.6 Sensitivity Summary 4-96
5. INTEGRAL SAFETY SIGNIFICANCE RESULTS AND DISCUSSION 5-1
5.1 INTEGRAL RESULTS 5-1
5.1.1 Core Spray System 5-3
5.1.2 Standby Gas Treatment System 5-6
5.1.3 Feedwater System 5-7
5.2 RESULTS of the Significance Determination 5-11
5.3 Summary of safety Significance Determination 5-48
5.4 AGGREGATE IMPACT OF EXERCISING OPTION 2 CHANGES IN SPECIAL TREATMENT 5-52
6. SPECIAL TREATMENT OPTIONS AND ASSOCIATED IMPACT 6-1
6.1 Discussion 6-1
6.2 Exemptions to Special Treatment Regulations 6-2

6.2.1 Regulations Not Addressed in the Pilot Evaluation 6-2
6.2.2 Administrative Control Regulations 6-6
6.2.3 Technical Performance Regulations 6-12
7. CONCLUSIONS AND RECOMMENDATIONS 7-1
8. REFERENCES 8-1
APPENDIXES
APPENDIX A SYSTEM FUNCTIONS A-1
APPENDIX B QUAD CITIES PRA QUALITY PROCESS B-1
APPENDIX C QUAD CITIES LEVEL A & B FACTS AND OBSERVATIONS C-1
APPENDIX D DISPOSITION OF QUAD CITIES PRA PEER REVIEW D-1

LIST OF TABLES

Page

TABLE ES-1 SAFETY SIGNIFICANCE SUMMARY BY SYSTEM, FUNCTION, AND ASSESSMENT CHARACTERISTICS v
TABLE 1.1 SPECIAL TREATMENT REGULATIONS SUBJECT TO OPTIONAL RISK-INFORMED APPROACH OF 10 CFR 50.69 1-9
TABLE 3.1 AVAILABLE QUAD CITIES ANALYTIC TOOLS 3-6
TABLE 3.3-1 SUMMARY OF GRADE ASSIGNMENTS BY PRA ELEMENT 3-21
TABLE 3.3-2 SUMMARY OF QUAD CITIES PRA PEER REVIEW FACT AND OBSERVATIONS 3-22
TABLE 3.3-3 SUMMARY OF QUAD CITIES PRA QUALITY ATTRIBUTES COMPARED WITH GUIDANCE FROM NEI 3-23
TABLE 3.4-1 SYSTEM FUNCTIONS FOR OPTION 2 CATEGORIZATION 3-30
TABLE 3.4-2 SUMMARY OF SAFETY CATEGORIZATION 3-35
TABLE 3.5-1 SUMMARY OF THE QUAD CITIES PROBABILISTIC RISK ASSESSMENT (PRA) INPUTS TO THE RISK-INFORMED PROCESS 3-56
TABLE 3.5-2 CHARACTERIZATION SUMMARY FOR INPUT TO IDP 3-59
TABLE 4.1.1-1 QUAD CITIES CORE SPRAY IMPORTANCES FOR INTERNAL EVENTS PRA FOR RPV INJECTION FUNCTION 4-25
TABLE 4.1.1-2 SUMMARY OF THE CORE SPRAY INJECTION VALVE RAW IMPORTANCE MEASURES AS PART OF THE CONTAINMENT ISOLATION FUNCTION 4-26
TABLE 4.1.1-3 CORE SPRAY RISK INSIGHT RESULTS - INTERNAL EVENTS 4-27
TABLE 4.1.2-1 SBGTS RISK INSIGHT RESULTS - INTERNAL EVENTS 4-33
TABLE 4.1.3-1 FEEDWATER IMPORTANCE MEASURES FOR HIGH PRESSURE RPV INJECTION 4-49
TABLE 4.1.3-2 FEEDWATER RISK INSIGHT RESULTS - INTERNAL EVENTS 4-50
TABLE 4.2.1-1 SUMMARY OF FIRE PRA IMPORTANCE MEASURES RELATIVE TO CDF CORE SPRAY TRAIN 4-54
TABLE 4.2.1-2 CORE SPRAY TRAIN A FIRE PRA IMPORTANCE MEASURES 4-55
TABLE 4.2.1-3 CORE SPRAY TRAIN B FIRE PRA IMPORTANCE MEASURES 4-57
TABLE 4.2.1-4 CORE SPRAY RISK INSIGHT RESULTS – FIRE EVENTS 4-60

TABLE 4.2.3-1 FEEDWATER SYSTEM IMPORTANCE MEASURES FOR RPV INJECTION FROM THE QUAD CITIES FIRE PRA 4-62
TABLE 4.3-1 SEISMIC SAFE SHUTDOWN PATH 4-64
TABLE 4.6-0 SUMMARY OF SENSITIVITY CASES IDENTIFIED BY NEI 00-04 4-98
TABLE 4.6-1 OPTION 2 BASE CASE IMPORTANCE MEASURES FOR RPV INJECTION FUNCTION . . . 4-99
TABLE 4.6-2 OPTION 2 SENSITIVITY CASE 1A IMPORTANCE MEASURES FOR RPV INJECTION FUNCTION (INCREASED HEP EMPHASIS) 4-100
TABLE 4.6-3 OPTION 2 SENSITIVITY CASE 1B IMPORTANCE MEASURES FOR RPV INJECTION FUNCTION (DECREASED HEPs EMPHASIS) 4-101
TABLE 4.6-4 OPTION 2 SENSITIVITY CASE 2A IMPORTANCE MEASURES FOR RPV INJECTION FUNCTION (INCREASED EMPHASIS ON COMMON CAUSE FAILURE) 4-102
TABLE 4.6-5 OPTION 2 SENSITIVITY CASE 2B IMPORTANCE MEASURES FOR RPV INJECTION FUNCTION (REDUCED EMPHASIS IN COMMON CAUSE CONTRIBUTIONS) 4-103
TABLE 4.6-6 OPTION 2 SENSITIVITY CASE 3 IMPORTANCE MEASURES FOR RPV INJECTION FUNCTION (REDUCED EMPHASIS ON MAINTENANCE UNAVAILABILITIES) . . 4-104
TABLE 4.6-7 OPTION 2 SENSITIVITY CASE 4A IMPORTANCE MEASURES FOR RPV INJECTION FUNCTION (INCREASE OF THE RANDOM FAILURE PROBABILITIES) 4-105
TABLE 4.6-8 OPTION 2 SENSITIVITY CASE 4B IMPORTANCE MEASURES FOR RPV INJECTION FUNCTION (REDUCTION OF THE RANDOM FAILURE PROBABILITIES) 4-106
TABLE 5.2-0 LISTING OF THE SUMMARY TABLES USED TO PROVIDE INPUT TO THE IDP REGARDING SYSTEM AND FUNCTION SAFETY 5-12
TABLE 5.2-1A RISK-INFORMED SSC ASSESSMENT WORKSHEET 5-13
TABLE 5.2-1B RISK-INFORMED SSC ASSESSMENT WORKSHEET -- SSC(s) EVALUATED: CORE SPRAY (EXCEPT CONTAINMENT ISOLATION VALVES) 5-14
TABLE 5.2-2A RISK-INFORMED SSC ASSESSMENT WORKSHEET 5-15
TABLE 5.2-2B RISK-INFORMED SSC ASSESSMENT WORKSHEET -- SSC(s) EVALUATED: CORE 5-SPRAY PRESSURE ISOLATION VALVES (INJECTION LINE) AND RPV BOUNDARY 5-17
TABLE 5.2-3A RISK-INFORMED SSC ASSESSMENT WORKSHEET 5-18
TABLE 5.2-3B RISK-INFORMED SSC ASSESSMENT WORKSHEET -- SSC(s) EVALUATED: CORE SPRAY DISTRIBUTION SPARGER 5-19

TABLE 5.2-4A RISK-INFORMED SSC ASSESSMENT WORKSHEET 5-20
TABLE 5.2-4B RISK-INFORMED SSC ASSESSMENT WORKSHEET -- SSC(S) EVALUATED: CORE SPRAY DEBRIS RETENTION 5-21
TABLE 5.2-5A RISK-INFORMED SSC(S) ASSESSMENT WORKSHEET 5-22
TABLE 5.2-5B RISK-INFORMED SSC ASSESSMENT WORKSHEET -- SSC(S) EVALUATED: CORE SPRAY FLOOD PREVENTION 5-23
TABLE 5.2-6A RISK-INFORMED SSC ASSESSMENT WORKSHEET 5-24
TABLE 5.2-6B RISK-INFORMED SSC ASSESSMENT WORKSHEET -- SSC(S) EVALUATED: CORE SPRAY KEEP-FILL 5-25
TABLE 5.2-7A RISK-INFORMED SSC ASSESSMENT WORKSHEET 5-26
TABLE 5.2-7B RISK-INFORMED SSC ASSESSMENT WORKSHEET -- SSC(S) EVALUATED: CORE SPRAY CONTAINMENT FLOODING 5-27
TABLE 5.2-8A RISK-INFORMED SSC ASSESSMENT WORKSHEET 5-28
TABLE 5.2-8B RISK-INFORMED SSC ASSESSMENT WORKSHEET -- SSC(S) EVALUATED: SBGTS FILTRATION AND MAINTENANCE OF RB NEGATIVE PRESSURE 5-29
TABLE 5.2-9A RISK-INFORMED SSC ASSESSMENT WORKSHEET 5-30
TABLE 5.2-9B RISK-INFORMED SSC ASSESSMENT WORKSHEET -- SSC(S) EVALUATED: SBGTS CONTAINMENT VENT 5-31
TABLE 5.2-10A RISK-INFORMED SSC ASSESSMENT WORKSHEET 5-32
TABLE 5.2-10B RISK-INFORMED SSC ASSESSMENT WORKSHEET -- SSC(S) EVALUATED: FEEDWATER FOR RPV INJECTION 5-34
TABLE 5.2-11A RISK-INFORMED SSC ASSESSMENT WORKSHEET 5-35
TABLE 5.2-11B RISK-INFORMED ASSESSMENT WORKSHEET -- SSC(S) EVALUATED: FEEDWATER FOR CONTAINMENT ISOLATION AND RPV BOUNDARY PROTECTION 5-36
TABLE 5.2-12A RISK-INFORMED SSC ASSESSMENT WORKSHEET 5-37
TABLE 5.2-12B RISK-INFORMED SSC ASSESSMENT WORKSHEET -- SSC(S) EVALUATED: FEEDWATER FOR RPV INJECTION PATHWAY FOR HPCI, RCIC, AND RWCU 5-38
TABLE 5.2-13A RISK-INFORMED SSC ASSESSMENT WORKSHEET 5-39
TABLE 5.2-13B RISK-INFORMED SSC ASSESSMENT WORKSHEET -- SSC(S) EVALUATED: FEEDWATER FOR PATHWAY FOR ZINC AND H_2 FLOW TO RPV 5-40
TABLE 5.2-14A RISK-INFORMED SSC ASSESSMENT WORKSHEET 5-41

TABLE 5.2-14B RISK-INFORMED SSC ASSESSMENT WORKSHEET -- SSC(S) EVALUATED: FEEDWATER FOR LP AND HP HEATING 5-42
TABLE 5.2-15A RISK-INFORMED SSC ASSESSMENT WORKSHEET 5-43
TABLE 5.2-15B RISK-INFORMED SSC ASSESSMENT WORKSHEET SSC(S) EVALUATED: FEEDWATER FLOW REGULATION 5-45
TABLE 5.2-16A RISK-INFORMED SSC(S) ASSESSMENT WORKSHEET 5-46
TABLE 5.2-16B RISK-INFORMED SSC ASSESSMENT WORKSHEET -- SSC(S) EVALUATED: FEEDWATER FLOOD PREVENTION 5-47
TABLE 5.3-1 SAFETY SIGNIFICANCE SUMMARY BY SYSTEM, FUNCTION, AND ASSESSMENT CHARACTERISTICS 5-49

LIST OF FIGURES

Page

FIGURE 3.1-1. QUAD CITIES OPTION 2 IMPLEMENTATION PROCESS BY FUNCTION AND FOR EACH RISK CONTRIBUTOR 3-11
FIGURE 3.3-1. PROCESS FOR ASSURING PRA QUALITY IN OPTION 2 CATEGORIZATION 3-25
FIGURE 3.4-1 FUSSELL VESELY - CALCULATION AND COMPARISON WITH SAFETY SIGNIFICANT CRITERIA 3-29
FIGURE 3.4-2. CORE SPRAY SYSTEM 3-44
FIGURE 3.4-3. STANDBY GAS TREATMENT SYSTEM FIGURE 3-45
FIGURE 3.4-4. FEEDWATER SYSTEM 3-54
FIGURE 4.1-1 FUSSELL VESELY - CALCULATION AND COMPARISON WITH SAFETY SIGNIFICANT CRITERIA 4-3
FIGURE 4.1-2. DEFENSE-IN-DEPTH TEMPLATE TO ASSESS SAFETY SIGNIFICANCE 4-4
FIGURE 4.5-1. SAFETY SIGNIFICANCE DETERMINATION FOR SHUTDOWN SAFETY ASSESSMENT 4-71
FIGURE 5.4-1 COMPARISON OF CHANGES IN THE INTERNAL EVENTS CALCULATED CDF WITH THE ACCEPTANCE GUIDELINES FOR CDF (FROM RG 1.174) 5-55
FIGURE 5.4-2 COMPARISON OF CHANGES IN THE INTERNAL EVENTS CALCULATED LERF WITH THE ACCEPTANCE GUIDELINES FOR LERF (FROM RG 1.174) 5-56

FIGURE 5.4-3 COMPARISON OF CHANGES IN THE FIRE EVENTS PRA CALCULATION OF CDF WITH THE ACCEPTANCE GUIDELINES FOR CDF (FROM RG 1.174) 5-57

ACRONYMS AND ABBREVIATIONS

ADS	Automatic Depressurization System
AO	Air Operated
ASME	American Society of Mechanical Engineers
ATWS	Anticipated Transient Without Scram
BOC	Break Outside Containment
BWR	Boiling Water Reactor
BWROG	Boiling Water Reactor Owners' Group
CCDP	Conditional Core Damage Probability
CCST	Contaminated Condensate Storage Tank
CDF	Core Damage Frequency
CFR	Code of Federal Regulations
CRD	Control Rod Drives
CS	Core Spray
CV	Check Valve
DBA	Design Basic Accident
ECCS	Emergency Core Cooling System
EOP	Emergency Operating Procedures
EQ	Environmental Qualification
F&Os	Facts and Observations
FCV	Flow Control Valve
FIVE	Fire Induced Vulnerability Evaluation
FSAR	Final Safety Analysis Report
FV	Fussell-Vesely
FW	Feedwater
GDC	General Design Criteria
HEP	Human Error Probability
HPCI	High Pressure Coolant Injection
HRA	Human Reliability Analysis
HSS	Safety Significant (High Safety Significance)
IDP	Integrated Decision-Making Panel
IEEE	Institute of Electrical and Electronic Engineers
IFW	Integrated Fussell-Vesely Importance
IPEEE	Individual Plant Examination of External Events
IRAW	Integrated Risk Achievement Worth

ISLOCA	Interfacing Systems LOCA
LERF	Large Early Release Frequency
LOCA	Loss of Coolant Accident
LPCI	Low Pressure Coolant Injection
LSS	Low Safety Significance

ACRONYMS AND ABBREVIATIONS (CONT'D)

MOV	Motor-Operated Valve
MUP	Makeup Pump
NEI	Nuclear Energy Institute
NRC	Nuclear Regulatory Commission
NRS	Not Risk Significant
OBE	Operating Basis Earthquake
ORAM	Outage Risk Assessment and Management Software
PDS	Plant Damage State
PRA	Probabilistic Risk Assessment
PSA	Probabilistic Safety Assessment
PSSA	Probabilistic Safety Shutdown Assessment
QC	Quad Cities
RAW	Risk Achievement Worth
RCIC	Reactor Core Isolation Cooling
RCS	Reactor Coolant System
RFP	Reactor Feedwater Pump
RHR	Residual Heat Removal
RISC	Risk Informed Safety Categorization
RMG	Risk Management Guidelines
RPV	Reactor Pressure Vessel
RRW	Risk Reduction Worth
SAMG	Severe Accident Management Guidelines
SBCS	Standby Coolant Supply
SBGTS	Standby Gas Treatment System
SECY	Secretary of the Commission
SENTINEL	Name of software product for outage risk analysis
SER	Safety Evaluation Report
SJAE	Steam Jet Air Ejector
SLOCA	Small Break Loss of Coolant Accident
SQUG	Seismic Qualification Utility Group
SSCs	Systems, Structures and Components
SSE	Safe Shutdown Earthquake
SSMP	Safe Shutdown Makeup Pump
STP	South Texas Project

STPNOC	South Texas Project Nuclear Operating Company
TBCCW	Turbine Building Closed Cooling Water
TDV	Torus Drywell Vent
TID	Technical Information Document
TMI	Three Mile Island
UFSAR	Updated Final Safety Analysis Report

1. INTRODUCTION

1.1 OVERVIEW

The regulations for design and operation of US nuclear plants define a specific set of design basis accidents that the plants must be designed to withstand. The implicit assumption behind these regulations is that avoidance of the design basis accidents provides adequate assurance to minimize significant public health impacts. This licensing basis was largely developed prior to significant plant operational experience and based on the principle that a limiting set of design basis accidents would bound the functional requirements for the broad set of transients and accidents that could be realistically expected over the life of the plant. In addition to the general design criteria contained in Appendix A of 10CFR50, other regulations have been imposed to assure that performance of Structures, Systems and Components (SSCs) is adequate to address the design basis accidents and other beyond-design basis accidents such as Station Blackout (SBO) and Anticipated Transients Without Scram (ATWS).

Since the inception of this regulatory basis, a large body of experience based on actual transients, accidents, and plant equipment performance has been accumulated. This experience, especially the event at Three Mile Island (TMI) in 1979, highlighted the concept that core damage can occur in ways other than the design basis accidents. This revelation led to the examination of other events and event sequences to determine if there were areas in the design basis, operation or instrumentation of the plants that required modification. To investigate the most likely contributions to core damage, the NRC via Generic Letter 88-20 requested that, "…consistent with the stated position of the commission and pursuant to 10CFR50.54(f), you are requested to perform an Individual Plant Examination (IPE) of your plant (s) for severe accident vulnerabilities and submit the results to the NRC."

As part of this response, all BWRs have performed probabilistic risk analyses (PRA), which use a probabilistic modeling framework to model a large number of potential accident sequences (including sequences not considered in the licensing basis). These PRAs provide an estimate of the frequency of core damage and of large early containment radiological release that can be considered to be a measure of the risk of a significant public health impact. By using realistic assumptions and plant experience, the PRAs provide a realistic estimate of the overall risk during normal plant operation. A key insight from the PRAs is that certain plant equipment important to the licensing basis is of relatively low safety significance, and, conversely, certain plant equipment important to safe operation is not directly addressed by the licensing basis.

Consistent with these PRA findings, the NRC has proposed a new rule known as Option 2 (SECY-98-300 [Ref. 20]) which permits licensees to implement a risk-informed approach for compliance with certain 10CFR50 regulations that establish "special treatment" requirements for plant SSCs. These special treatment requirements are those that provide additional confidence that the equipment is capable of meeting its functional requirements under design basis conditions such as additional design considerations, qualification for accident environmental conditions, change control, documentation, reporting, maintenance, testing, surveillance, and quality assurance requirements. Note that this so-called "Option 2" does not change design performance requirements for systems, structures, or components, only the methods by which these performance requirements are assured. The intent of the Option 2 implementation is to identify appropriate levels of Special Treatment requirements for SSCs in a consistent manner that makes use of the available risk information for the specific plant. There is no change in the functioning or functionality of the SSC.

- The proposed rule, 10 CFR 50.69, would define four categories of SSCs, based on a combination of existing safety categorizations and Safety Significance, to define the scope and applicability

of the existing special treatment provisions as a function of the categorization. The special treatment regulations (see Table 1.1-1) would not in themselves be changed, only the list of specific plant equipment to which they apply. NEI has developed a formal guideline, Option 2 Implementation Guideline (NEI 00-04), that allows consistent categorization and special treatment application for plant equipment subject to the new 50.69 regulation.

To implement the NEI guidelines, risk information for the systems under evaluation is derived from available plant specific risk analyses. In order to derive the risk perspective, the two risk metrics that are used are Core Damage Frequency (CDF)[1] and Large Early Release Frequency (LERF)[1]. Fussell-Vesely[1] and Risk Achievement Worth (RAW)[1] importance measures relative to these risk metrics are then calculated, compared with the guidelines from NEI 00-04, and used as inputs to the Integrated Decision-making Panel (IDP).

According to NRC, the decision to adopt a risk-informed approach for categorizing systems, structures, and components (SSCs) is voluntary. Each licensee will make its determination on whether to adopt a risk-informed approach to regulation based on the estimated benefit.

The NRC rulemaking plan does not replace the existing "safety related" and "non safety related" categorizations. Rather, 10 CFR 50.69 provides that each existing categorization category can be divided into two sub categories based on high or low safety significance. The categorization is depicted in Section 1.4.

The application of special treatment regulations and controls to specific SSCs is a function of the categorization. Regulatory requirements are applied for all categories except RISC 4. The

(1) See definitions in Section 1.4.

existing special treatment provisions for RISC 1 and RISC 2 are maintained. RISC 3 equipment would be subject to the licensee's standard commercial (balance-of-plant) controls with monitoring to provide reasonable assurance that the function directly referenced in the regulations or in the safety analyses required by regulation will be satisfied.

1.2 PURPOSE

This document discusses the application of the current draft NEI categorization process along with the trial application of Special Treatment (Ref 1)[2] to several systems in a typical BWR (Quad Cities) and presents the results of this trial application. The pilot addresses three representative systems as a practical method for "proof testing" the NEI categorization guideline. Through the consideration of the system components, their safety significance and the applicability of the special treatment regulations to those components, an assessment is made as to the benefit of implementing the option risk-informed approach defined in the proposed rule 10CFR50.69.

The results contained in this report are intended for use by an Integrated Decision-Making Panel (IDP), similar to the Maintenance Rule Expert Panel, composed of licensee personnel. The IDP performs the key function of making the final decisions about SSC categorization and special treatment application, using this report as input.

1.3 SCOPE

The scope of the BWROG pilot program is limited to a single representative plant, Quad Cities Unit 1. In addition, the following three systems are evaluated; two systems that are safety related and one system that is non-safety related:

- Core Spray – Safety Related

(2) Table 1.1 of reference 1 lists the special treatment regulations that would be subject to the optional risk-informed approach.

- Standby Gas Treatment System – Safety Related

- Feedwater – Non-Safety

The existing Quad Cities PRA models and their results are used consistent with the current plant configuration at the time of the PRA freeze date 1998.

1.4 DEFINITIONS

The following definitions are useful in reviewing the Option 2 technical discussion:

- Top Event

  A Top Event is a logical statement about some undesirable situation, e.g., "Core Spray unavailable for RPV injection" or "Operator fails to recover drain down." A top event or sequence of top events can lead to an undesirable consequence e.g., core damage.

- Core Damage Frequency (CDF)

- CDF: The loss of adequate core cooling (core damage) is defined as the rapid increase in fuel clad temperature due to heating and Zircaloy-water reactions that lead to sudden deterioration of fuel clad integrity. For the purpose of the Level 1 PSA, a surrogate has been developed that can be used as a first approximation to define the onset of core damage. The onset of core damage is defined as the time at which more than two-thirds of the active fuel becomes uncovered, without sufficient injection available to recover the RPV water level quickly, i.e.,

water level below one-third core height and falling plus calculated peak core temperatures from MAAP Code greater that 1800°F.

- Large Early Release Frequency (LERF)

- LERF: The LERF definition used is the frequency based on the following taken from the PSA Applications Guide:

> *Large, Early Release: A radioactive release from the containment which is both large and early. Large is defined as involving the rapid, unscrubbed release of airborne aerosol fission products to the environment. Early is defined as occurring before the effective implementation of the offsite emergency response and protective actions.*

It is consistent with the parameter chosen for use in the PSA Application Guide [Ref. 21] and Regulatory Guide 1.174 [Ref. 30]. The base internal events LERF for Quad Cities, is 3.3E-06 per year. The LERF associated with fire is not calculated, because no fire LERF model was developed for Quad Cities.

- Fussell-Vesely Importance

The Fussell-Vesely (FV) importance for a component is defined as the conditional probability that the component is in a failed state given that the top event has occurred. The FV importance can be interpreted as the fraction of the total risk measure (e.g., CDF) that can be eliminated if the component can be made perfectly reliable. For example, a FV of 0 (zero) indicates that the risk measure is not affected by the component. A FV of 0.1 indicates that the risk measure can be reduced by 10% if the component can be made perfectly reliable.

- Risk Achievement Worth

The Risk Achievement Worth (RAW) of a component is the factor by which the risk measure (e.g., CDF) will increase if the component is failed. For example, a RAW of 1.0 indicates that there is no change in the risk measure. A RAW of 2.0 indicates that the risk measure has doubled.

- Safety Significant

There are a number of quantitative and qualitative evaluations that are used to assess the safety significance of the SSCs. These evaluations are discussed within the text. One specific quantitative guideline is that related to the SSC importance measures of Fussell-Vesely (FV) and RAW relative to both CDF and LERF. For purposes of Option 2, the NEI 00-04 Guidelines specify that an SSC is defined as safety significant if the FV importance is >0.005 or the RAW importance is >2.0. It is also noted that the draft Appendix T to 10 CFR 50 from the NRC staff also uses these importance measures and these values.

- Complicated Initiating Event

A complicated initiating event is considered an event that trips the plant <u>and</u> causes an impact on a key safety function. Examples of complicated initiating events include loss of all Feedwater, loss of condenser, etc. In addition, a complicated initiating event must have a Fussell-Vesely importance greater than the criteria (0.005).

- SSC

Systems, Structures, and Components are the basic elements of plant hardware. These are the elements that are evaluated as part of the Option 2 risk-informed process.

- Safety Related SSC

Safety related SSCs are those that are so defined in the plant's licensing basis and are historically considered necessary to remain functional during and following design basis events to assure:

1. The integrity of the reactor coolant pressure boundary.
2. The capability to shut down the reactor and maintain it in a safe shutdown condition; or
3. The capability to prevent or mitigate the consequences of accidents which could result in potential offsite exposures comparable to the applicable guideline exposures set forth in §50.34(a)(1) or §100.11 of Title 10 of the code of Federal Regulations, as applicable.

- Risk-Informed Significance

RISK-INFORMED SIGNIFICANCE			
	HIGH	**RISC 1 SSCs** Safety Related, Safety Significant	**RISC 2 SSCs** Non-Safety Related, Safety Significant
	LOW	**RISC 3 SSCs** Safety Related, Low Safety Significant	**RISC 4 SSCs** Non-Safety Related, Low Safety Significant
		Safety Related	**Non-Safety Related**

1.5 REPORT ORGANIZATION

Section 2 describes the four overriding principles and the associated steps of implementation of the principles in the risk-informed categorization process defined by the NEI guidelines (Ref. 1).

Section 3 describes the various risk related evaluations that have been developed at Quad Cities and which form the basis for the risk informed process.

Section 4 provides a compilation of risk insights of the Quad Cities systems that are selected for the pilot study. These insights are typical for those that would be expected to be identified for the Integrated Decision-Making Panel (IDP).

Section 5 provides a consolidated profile of the Safety Significance of the pilot system components and identifies those that are of high safety significance (HSS) and those which are of low safety significance (LSS), based on considerations of all risk related insights.

Section 6 reviews each of the special treatment regulations, discusses which special treatment regulations provide good candidates for exemptions and discusses the potential impact if exemptions are approved for these requirements.

Section 7 provides the conclusions and recommendations from this pilot assessment.

Section 8 contains references.

Appendix A describes the system functions and components for the three systems chosen for the pilot evaluation:

- Core Spray
- SBGTS
- Feedwater

•

Table 1.1
SPECIAL TREATMENT REGULATIONS SUBJECT TO
OPTIONAL RISK-INFORMED APPROACH OF 10 CFR 50.69

50.34	Contents of applications; technical information (FSAR)
50.44	Standards for combustible gas control system in light-water-cooled power reactors
50.49	Environmental qualification
50.54	Conditions of licenses (in reference to Quality Assurance Programs only)
50.55	Conditions of construction permits
50.55a	Codes and standards
50.62	Requirements for reduction of risk from anticipated transients without scram (ATWS) events for light-water-cooled nuclear power plants.
50.63	Loss of all alternating current power
50.65	Monitoring effectiveness of maintenance
50.72	Immediate Notification Requirements
50.73	Licensee Event Reporting
Appendix A	General Design Criteria GDC 1, Quality standards and records GDC 2, Design bases for protection against natural phenomena GDC 3, Fire protection GDC 4, Environmental and dynamic effects design bases GDC 37, Testing of emergency core cooling system GDC 40, Testing of containment heat removal system GDC 42, Inspection of containment atmosphere cleanup systems GDC 43, Testing of containment atmosphere cleanup systems GDC 45, Inspection of cooling water system GDC 46, Testing of cooling water system

Appendix B	Quality Assurance
Appendix J	Containment leakage
Appendix R	Fire Protection
Appendix S	Seismic
Part 21	Reporting of defects and noncompliance
Part 52	Advanced Reactors
Part 54	License Renewal
Part 100	Appendix A, Seismic

2. RISK-INFORMED CATEGORIZATION PROCESS

2.1 GUIDING PRINCIPLES

NEI has established a guideline for implementation of a risk-informed process for the categorization of systems, structures, and components (SSCs) according to the categorization scheme identified in Section 1. The NEI process guidance is contained in
NEI 00-04, Option 2 Implementation Guideline (Draft Revision A2). [Ref. 1]

Before describing the categorization process, it is useful to understand first the objectives, which drove the development of the NEI process, and the guiding principles, which govern the NEI process and criteria.

> *The objective of the NEI guidance is to establish the process and criteria for determining the SSCs that require special treatment. By defining the SSCs that require special treatment, those that do not require special treatment are identified by exception. The process and criteria are intended to be sufficiently clear and robust such that if a licensee's program meets the criteria there is not a need for prior NRC review and approval of the plant specific program.* (Ref. 1)

As the process and criteria were developed, a number of guiding principles were used to steer the process. These principles are:

- Applicable risk assessment information will be utilized.
- If no PRA information exists related to a particular hazard or operating mode, deterministic or qualitative information will be relied upon.
- The categorization process should employ a blended approach considering both quantitative PRA information and qualitative information.

- The principles of the NRC's risk-informed approach to regulations, as embodied in Reg. Guide 1.174, will be maintained.
- Where an engineering basis for recategorization can not be developed, no change in treatment of the SSC will occur.
- The attribute(s) which make an SSC safety significant will be factored into treatment.
- Some treatment for RISC-3 SSCs will be implemented to insure the SSCs maintain function.

2.2 CATEGORIZATION PROCESS STEPS

In overview, the approach to the risk-informed categorization process can be described in a four step process. This four step process is illustrated in the figure below.

Risk-Informed Categorization Process

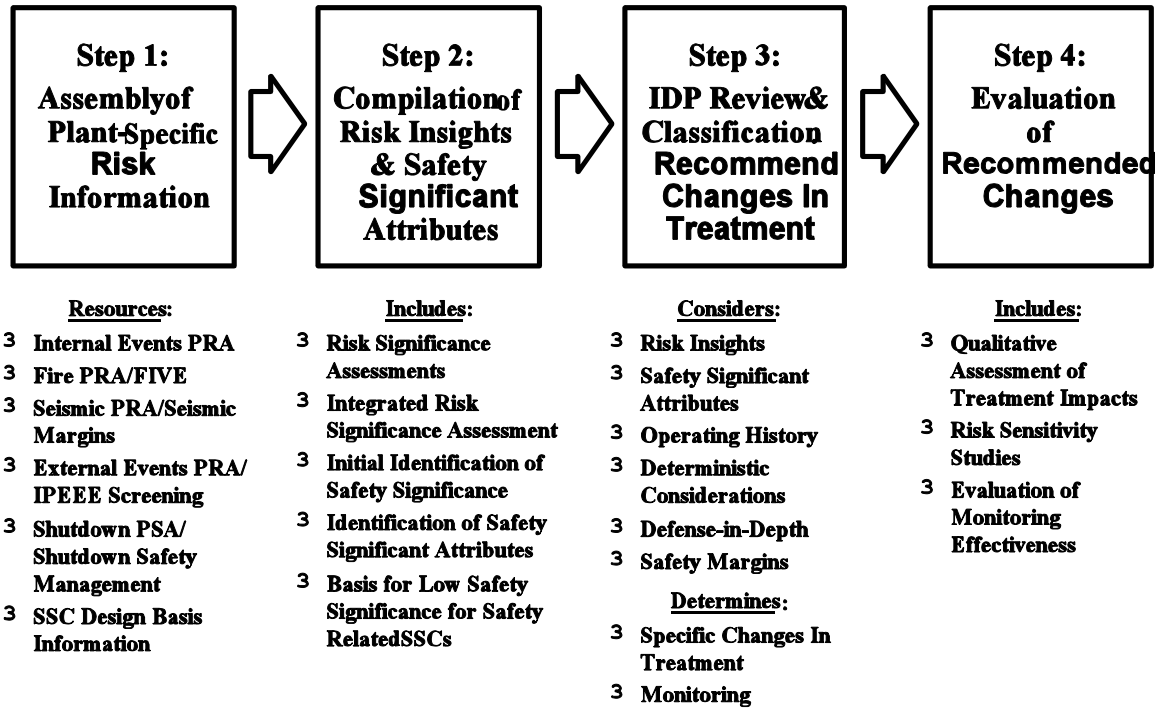

Step 1: Assembly of Plant-Specific Risk Information

This step involves the collection of relevant plant specific risk information. This information includes information from a plant specific internal events PRA as well as other risk information such as external event analyses, shutdown analysis, or other relevant sources of risk information.

Step 2: Compilation of Risk Insights and Safety Significant Attributes

Step 2 is divided into three separate steps:

Step 2.1: Risk Insights

This step involves the evaluation of each candidate system with respect to its safety significance in five areas. These areas are the following:

- Internal Events PRA
- Fire PRA/FIVE Methodology
- Seismic PRA/Seismic Margins
- External Events PRA/IPEEE Screening
- Shutdown PRA/Shutdown Safety Management

The approach taken is to follow the NEI Guidance, NEI 00-04, dated December 2000, on categorization. The NEI Guidelines allow the use of either PRA information or alternative information, including screening techniques and deterministic assessments. The NEI Guidelines make use of flow charts to allow the analyst to implement the process consistent with the type of plant specific information available. Where PRA analyses are not available to support the specific requirements specified in the NEI Guidance, then the best information available is used.

Step 2.2: Safety Significant Attributes

The identification of the SSCs and their associated functions are important in establishing the scope of the PRA evaluations and the approach to be taken for each of the SSCs. Therefore, this step includes the evaluation of the selected pilot systems to ascertain the SSCs associated with each of the functions for these systems.

Functions of a given system will have different safety significance. Therefore, system, structures and components will have their safety significance determined by which functions they participate in.

Step 2.3: Screening Criteria Within the PRA Evaluation

If applicable PRA input information is available, the NEI Guidelines provide the approach and the criteria to be used in a quantitative assessment. The process includes the evaluation of SSCs within the PRA framework to assess the "importance" of the SSCs to the risk profile. The "importance" is measured using both Fussell-Vesely and Risk Achievement Worth. These importance measures are calculated relative to two surrogate risk measures: CDF and LERF. The two risk metrics and the importance measures are used in the quantitative evaluation process for the determination of whether an SSC is potentially a candidate for categorization as safety significant or low safety significant.

Importance measures are also calculated for each individual PRA input (e.g., internal events, fires, seismic, etc.). In addition, integral importance measures are also calculated for the SSC as an over all risk contributor.

The numerical criteria for all importance measure applications are that an SSC is a candidate for high safety significance if either of the following is true:

FV > 0.005

or

RAW > 2.0

This same criteria is identified by the NRC for the proposed Appendix T [Ref. 8] to 10 CFR 50.69.

Based on these importance measures and criteria established in the NEI Guidelines, the PRA evaluation produces a recommendation regarding the safety significance of the SSC. This is presented to the Integrated Decision-Making Panel (IDP) to make the final judgement. (See Step 3 below.)

The necessity of addressing each component, or each part of a component, is determined by the licensee based on the anticipated benefit. A licensee may determine that it is sufficient to perform only system or subsystem analyses. In such cases, all the components within the boundaries of the subsystem or system would be governed by the same set of requirements as the individual components within the system or subsystem. Each licensee has the option, based on the estimated benefit, of performing additional engineering and system analyses to identify specific component level or piece part functions and attributes.

Step 3: IDP Review and Categorization. Recommend Changes in Treatment.

This step involves the review by the IDP of the results from Step 2. The purpose of this panel is to review the risk information developed in Step 2 and evaluate other considerations, which are part of a risk-informed process. The result of the IDP review is the categorization of SSCs and identification of the changes in treatment and monitoring.

Step 4: Evaluation of Recommended Changes.

This step involves both qualitative and quantitative assessments of the anticipated impact of the proposed changes. Because one of the guiding principles of this process is that changes in treatment should not degrade performance for RISC-3 SSCs, and RISC-2 SSCs would be expected

to maintain or improve in performance, it is anticipated that there would be little, if any, net increase in risk. This assessment involves the review of the specific treatment changes recommended by the IDP to identify the anticipated impact on a qualitative basis. It also involves an aggregate evaluation of risk due to all changes in terms of CDF and LERF relative to the acceptance guidelines from Regulatory Guide 1.174. Performance monitoring requirements for the newly categorized SSCs is also a potential part of the process.

The above steps in the Risk-Informed Categorization Process represent a summary of the process steps needed to perform the categorization. A detailed presentation of the steps and considerations are provided in reference [Ref. 1].

3. ASSEMBLY OF PLANT SPECIFIC RISK INFORMATION

This section provides a summary of the first step in the NEI Categorization process, the assembly of plant specific information, as it applies to the Quad Cities pilot plant application. This section consists of the following:

- Documentation of the available resources to support the Categorization Process (Section 3.1).
- Basis for the use of the PRA information (i.e., PRA "Quality") (Section 3.2).
- Disposition of PRA peer review findings as they influence the Option 2 implementation (Section 3.3).
- Description of the safety functions and modeling approach for each of the selected systems (Section 3.4).
- Summary of the results of the information gathering step (Section 3.5).
- Screening Criteria used to identify candidate low safety significant SSCs (Section 3.6).

3.1 AVAILABLE AND DOCUMENTED RESOURCES TO SUPPORT CATEGORIZATION PROCESS

The NEI Option 2 Implementation Guidelines are structured to make use of either PRA input or deterministic inputs to provide a consistent set of input to the IDP. Therefore, this subsection discusses the availability of both types of information for their use as part of developing the integrated input to the IDP. The sources of plant specific risk information are generally the following:

- Internal Events PRA
- Fire PRA or FIVE Analysis
- Seismic PRA or Seismic Margin Assessment
- External Hazards PRA(s) or IPEEE Screening Assessment of External Hazards
- Shutdown PRA or Shutdown Safety Program developed per NUMARC 91-06

The Quad Cities analyses available to support the Categorization process include the following:

- Internal events PRA (Level 1 and Level 2/LERF)
- Internal Fires PRA
- Seismic Margin Assessment
- IPEEE screening assessment for other external hazards

- SENTINEL/ORAM outage management program

Table 3.1-1 summarizes the analytic tools that are available for use in the Option 2 application at Quad Cities. It also summarizes the reviews of the PRA tools that have been performed.

Figure 3.1-1 shows a conceptual flow of information for the evaluation of a system, Core Spray System. The flow of information includes the identification of the functions of Core Spray that apply to both the UFSAR and the PRA. It then shows that the Quad Cities evaluation process to provide input to the IDP varies depending on the tools available at Quad Cities.

In addition to these PRA input sources, Quad Cities has also undergone a PRA application involving a probabilistic assessment of the In Service Inspection (ISI) of welds in critical systems. This provides valuable input into the Option 2 risk evaluation of the Core Spray system.

3.1.1 Internal Events PRA

The internal events Quad Cities PRA [Ref. 14] has been updated in April 1999 to incorporate the plant modifications current at that time and to convert the model to CAFTA software. Therefore, consistent with the NEI Guidelines, the Quad Cities Level 1 PRA has been updated within the last 3 years (1999). The 1999 PRA update includes a full update of the PRA documentation and a re-examination of the modeling approach used for:

- Initiating events
- Accident sequences
- Common cause failures

- Human Reliability Analysis (HRA)

- LERF

The internal events CDF calculated from this last PRA update is 4.6E-6/yr. Quad Cities

No significant plant modification or changes in plant operations philosophy has occurred since then that would significantly change the PRA[1]. In addition, the PRA received a thorough review in 1999 as part of the Industry PRA Peer Review process [Ref. 22] and the principal PRA areas identified for improvement have been performed.

The Quad Cities internal events risk measures include the following:

Risk Measure	Value (events/year)
CDF	4.6E-06/yr
LERF	3.3E-06/yr

The Quad Cities internal events PRA (BWR/3, Mark I) results show similarities with the risk profile of other BWRs of a similar design. The functional contributors to the internal events CDF are the following:

- Loss of Decay Heat Removal (Class II) -- 32%

(1) It is noted that the EOP changes incorporating the EPG/SAGs have been evaluated and incorporated into the PRA. The dominant change in philosophy (use of external RPV injection when containment is outside the PCPL limit curve) has been included quantitatively. In addition, one plant modification (feedwater suction pressure trip) has been implemented that does not affect the base PRA but does influence the importance measures for feedwater.

- Failure to Scram Without Mitigation (Class IV) -- 26%
- Loss of RPV Injection at High Pressure (Class IA/IE) -- 20%
  - Due to Total Loss of DC Power (Class IE) -- 17%
  - Due to Mechanical Failure (Class IA)-- 3%
- LOCA With Loss of RPV Injection at Low Pressure (Class III) -- 13%
- Station Blackout (Class IB) -- 9%

While this profile of contributors is similar to other BWR Mark I plants in type and degree of participation for most contributors, three possible differences are worthy of discussion:

- Station Blackout (SBO) (Class IB) accident sequences are a relatively small contributor at Quad Cities because of the special "SBO Diesels" installed at Quad Cities as part of the SBO rule.
- The LOCA contribution is slightly larger than might be expected because the Quad Cities plant has unpiped safeties that are treated as LOCA events in the PRA.
- Finally, another design difference, an "extra" motor driven high pressure injection source reduces the potential for high and low pressure transient core damage events.

The baseline Quad Cities PRA includes a LERF-only Level 2 model. The Quad Cities conditional probability of a LERF given a core damage accident is at the high end of the spectrum of BWR Mark I evaluations. In general, the conditional probability of a LERF given a core damage event in a BWR Mark I containment is in the range of 0.15 to 0.8. The overall conditional probability is a strong function of the following:

- The accident sequence types that lead to core damage
- The method used to implement accident management guidance from the BWROG
- The Emergency Action Levels (EALs) at the plant
- The deterministic calculations available to support the radionuclide release magnitude assessment

The Quad Cities assessment of LERF is conservative because each of the above items is treated conservatively in the Level 2 assessment.

Table 3.1
AVAILABLE QUAD CITIES ANALYTIC TOOLS

	Analytic Tools	Reviewed
Internal Events	Updated PRA	Industry Peer Review (NEI 00-02), Exelon
Fire Events	Updated PRA	Exelon, NRC
Seismic	Seismic Margins	Exelon, NRC
Shutdown	Outage Management Guidelines	Exelon, NRC
"Other" External Events	IPEEE (GL88-20)	Exelon, NRC SER,

3.1.2 Fire PRA

A fire events IPEEE was submitted by Exelon in response to GL 88-20 supplement requirements. This fire IPEEE analysis was judged by Exelon to be unrealistically conservative. Therefore, subsequently, a thorough PRA re-evaluation was performed to provide a more realistic assessment of the fire induced risk at Quad Cities.

Quad Cities Fire PRA Overview

A Level 1 Internal Fires PRA [Ref. 16] has been updated as part of the risk-informed approach to operating Quad Cities. The Fire PRA has examined the cable routing, the modeling of compartments and their fire hazards, and has probabilistically evaluated the risk associated with fires at Quad Cities.

The risk measure calculated in the Quad Cities Fire PRA is the following:

Risk Measure	Value (events/year)
CDF	6.6E-05/yr

The recently updated Quad Cities Fire PRA was reviewed by the NRC. The Quad Cities Fire PRA is considered to be at the state of the technology in both PRA techniques and fire modeling. Nevertheless, there may be some conservatisms that have been incorporated into the modeling. One such conservatism relates to the treatment of spurious ADS actuation due to a fire. This has been modeled as a large break LOCA in so far that it has used the large break LOCA success criteria. The following describes the impact of this success criteria assumption on the calculated importance measure for Core Spray within the Option 2 risk-informed regulation program.

Impact on Option 2 Safety Significance

The fire events PRA, as submitted and reviewed by the NRC, has identified a small number of potential fire scenarios that result in Core Spray Loop B having a calculated RAW above the Option 2 screening criteria. The postulated accident sequences have the following characteristics:

- Fire initiated
- RPV water level normal

- Fire causes spurious ADS initiation (all 5 valves open)[1]
- Reactor scram occurs on Level 3
- MSIVs close (lo-lo level)
- Fire fails all LPCI injection (MCC 18 and 19 Breakers)
- Fire fails CS Loop A
- No credit for any high pressure injection (HPCI, RCIC, SSMP, CRD) due to the opening of all ADS valves.
- Sequence is treated as a large LOCA above TAF.

In order to confirm that the sequence of events and the assigned success criteria are not overly conservative, a plant specific detailed thermal hydraulic calculation was performed. The specific aspect of these sequences being investigated is whether the availability of other systems could be credited in the success criteria, specifically use of the Quad Cities high pressure system, i.e., the SSMP motor driven system. The SSMP can be used for both high and low pressure makeup. This is a unique system at Quad Cities and not applicable at most other BWRs. For simplicity, the SSMP was conservatively not credited as a makeup source for spurious ADS sequences in the Fire PRA recently reviewed by the NRC. The thermal hydraulic calculation shows that during fire induced spurious ADS events the SSMP can be effectively used to prevent any consequential core damage. Making use of this change in success criteria results in a revision to the base fire events PRA. The total fire core damage frequency decreases as follows for Quad Cities Unit 1:

[1]) this spurious initiation of ADS is an assumed consequence of the fire. This portion of the evaluation could also be considered overly conservative, however this assumption is not investigated here.

Evaluated Cases	Fire PRA CDF (per/yr)
Conservative Success Criteria for Spurious ADS Initiation in recently reviewed PRA	6.6E-05
Revised Best Estimate Success Criteria for Spurious ADS Initiation	6.4E-05/yr

This change in success criteria, as supported by the deterministic calculations, results in a revised set of CDF calculations with relatively small impact on the total CDF. The importance measures for fire initiated events presented here are based on the recently updated Quad Cities Fire Events PRA with the revised best estimate success criteria as demonstrated with the recently performed thermal hydraulic calculation.

3.1.3 Seismic Margin Assessment

As part of the Quad Cities IPEEE Submittal, Exelon performed a seismic margin study of Quad Cities. A safe shutdown path was identified as part of the evaluation.

No quantifications of risk measures (CDF or LERF) were performed as part of the seismic IPEEE assessment.

No risk outliers or vulnerabilities were identified.

3.1.4 IPEEE for Other External Events

As part of the IPEEE Submittal [Ref. 23], Exelon evaluated the impact of “other” external events using the screening approach specified in the NRC guidance of NUREG-1407 [Ref. 18].

No quantitative risk measures were developed as part of the screening method. However, the screening methodology employed as part of the IPEEE led to the assessment that the CDF due to “other” external events is less than 1E-06/yr.

No risk outliers or vulnerabilities were identified.

3.1.5 Shutdown

The Quad Cities plant has been modeled in two different ways to support the management of risk during shutdown. First, a deterministic, defense-in-depth, evaluation model has been developed using the ORAM technology. This defense-in-depth model is the governing process used to control the risk during shutdown operations. As a supplement to this process (also used to confirm the original development of the deterministic model), there is a Probabilistic Shutdown Safety Assessment (PSSA). This PSSA model has not been rigorously verified and is not generally used to quantify the risk for outages.

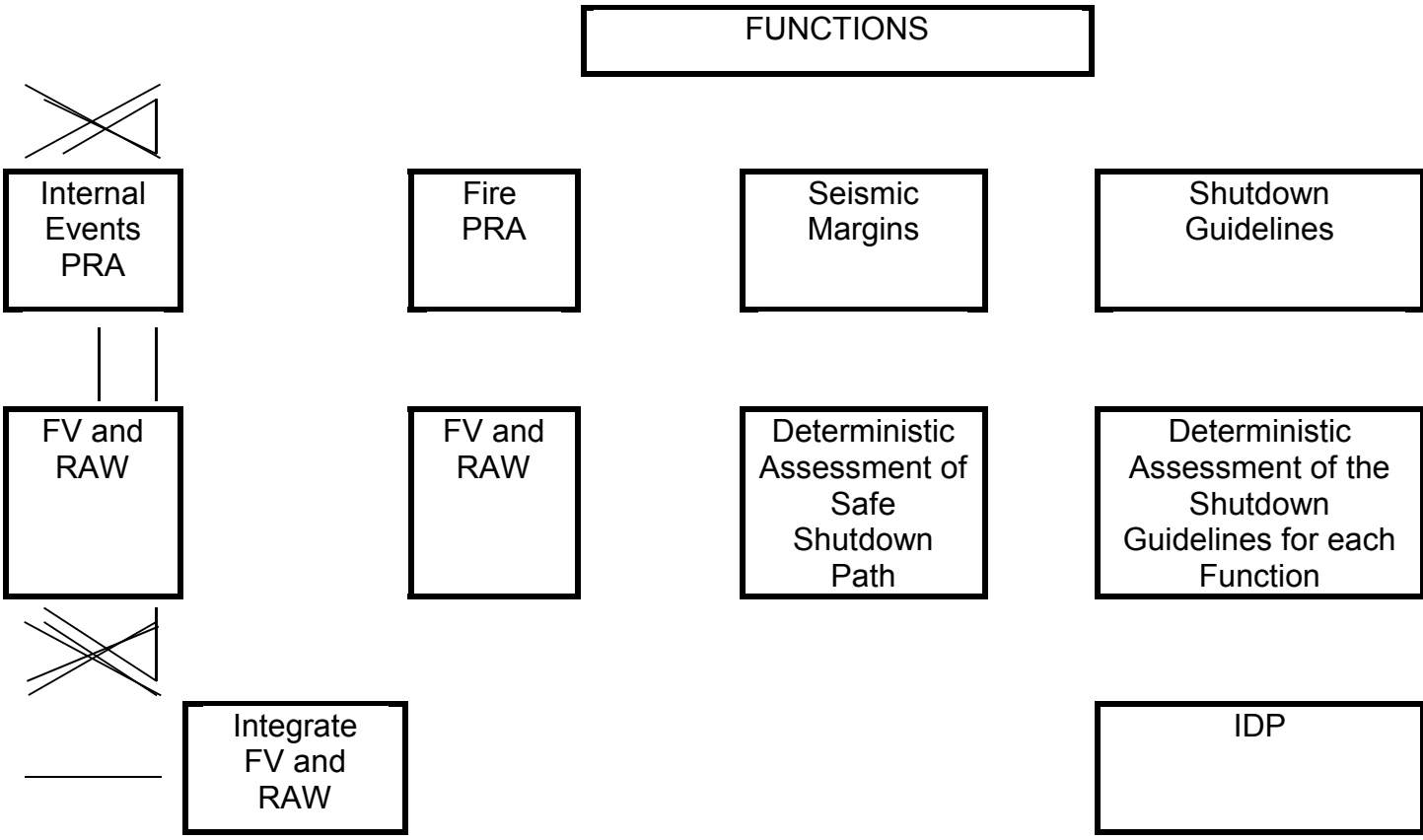

Figure 3.1-1. Quad Cities Option 2 Implementation Process by Function and for Each Risk Contributor

3.2 BASIS FOR USE OF PRA INFORMATION

This subsection addresses the Quad Cities processes that are in place to assure that the PRA information used in the Option 2 process is sufficient to support the required analysis and decisions. Each of the inputs to the risk spectrum as described in Section 3.1 are evaluated and the results described.

3.2.1 Internal Events PRA

The internal events PRA [Ref. 14] is part of the continuing risk management program at Quad Cities. Exelon is committed to ensuring that the PRA is updated, maintained, and used consistent with high quality standards. The elements of the risk management program that are useful to identify to characterize the degree of quality that can be attributed to the internal events PRA are the following:

- Internal Process Controls for PRA
  - Quality process including ten specific features to enhance PRA quality (Appendix B summarizes the PRA approach to PRA quality).
  - Engineering procedure, ER-AA-600, discusses the process for PRA control, change tracking, and update. Qualifications of the personnel who perform and review the PRA are specified.
  - Extensive documentation is available to support the model inputs, methods, and results.
  - The internal events PRA has been updated to the current state of the technology in 1999.

- An independent audit of the internal events PRA using the Industry PRA Peer Review Process [Ref. 22] has been completed for Quad Cities. The results are documented in Reference 13. The documentation provides:
  - the review process methodology
  - the qualification of the reviewers
  - the findings of the review

The results of the findings of the PRA Peer Review assessments are discussed in Section 3.3 of this report.

This approach is consistent with the objectives stated in Regulatory Guide 1.174 [Ref. 30] and SECY 00-0162 [Ref. 31].

3.2.2 Fire PRA

The Fire PRA [Ref. 16] was developed over a number of years through the cooperation of the site and corporate resources. The following are among the key steps in the process:

- The original Quad Cities Fire IPEEE submittal was provided to the NRC via letter dated 2/17/97. The submittal reported CDF values that were above the surrogate safety goals.

- Following the update and conversion of the internal events PRA to state of the technology status in 1998, the Fire IPEEE was substantially updated and upgraded resulting in the preparation of a new analysis. Internal project level reviews occurred by corporate engineering and PRA groups in concert with site engineering. The result was the production of a submittal document to the NRC updating the IPEEE submittal. This document reported CDF values within the surrogate safety goals- 6.60E-05/yr and 7.13E-05/yr for Units 1 and 2, respectively. This new submittal was provided to the NRC via letter dated 5/27/99.

- A focused Safety Significance study of Appendix R Exemptions for Quad Cities was transmitted to the NRC via letter dated 11/5/99. The attachment to this letter presents the results of a study which showed a RRW of 1.06 associated with Appendix R Exemptions. The study considered a hypothetical configuration wherein the plant was modified such that the exemptions were not needed. The CDF associated with this configuration was compared to the CDF for the as-built plant to develop the RRW.

- An NRC team visited the Quad Cities site during the period March 21 through 23, 2000. The NRC team consisted of Alan Rubin, Ed Connell, Ed Chou, and Nathan Siu (all NRC) and Mardy Kazarians (Contractor). The correspondence which was exchanged prior to this visit included 6 preliminary RAI items. During the visit, two

of the RAIs were closed, based on review of documentation, but two new items were added.

- Subsequent to the onsite visit, the 6 RAIs were formally transmitted to Exelon and responses submitted during the summer of 2000.

The Fire PRA [Ref. 16] has been subjected to both internal Exelon review and NRC review to assure that the Quad Cities risk conclusions associated with postulated fire initiating events and their impact on plant modification and procedure changes are understood and reasonable.

The fire events PRA was also reviewed internally at Exelon to ensure that the insights from the internal events PRA Peer Review performed by the BWROG were addressed in the fire events PRA. This added assurance to the robust nature of the fire model for its use in applications.

It is judged that the NRC review satisfies the independent audit process cited in the NEI 00-04 guidelines [Ref. 1] for categorization.

3.2.3 Seismic Margin Study

The Quad Cities IPEEE Submittal [Ref. 15] used a Seismic Margin approach to assess seismic events. This approach does not include a PRA evaluation. Therefore, the pilot process is performed without the aid of PRA input from the seismic hazard evaluation. The NEI Guideline makes specific provision for such alternative deterministic methodologies.

3.2.4 Other External Events

The Quad Cities IPEEE Submittal [Ref. 15] includes a probabilistic screening of "other" external events (e.g., external floods, high winds, transportation events). The screening process is adequate to address the elimination of these hazards from quantitative consideration in the PRA. The NEI Guideline makes specific provision for such alternative methods. In addition, the systems chosen for the Option 2 evaluation are judged not to be adversely impacted by the screened, low frequency "other" external hazards; specifically, the decisions made regarding the three pilot systems based on the PRA quantification for internal events and the Fire PRA would not be affected by insights from the "other" external events quantification.

3.2.5 Shutdown Events

Exelon uses a deterministic process for shutdown configuration control. This ensures that safety is maintained during shutdown conditions. The Option 2 Implementation NEI Guideline specifically addresses how the deterministic shutdown rules are used to make an assessment of the safety significance of the SSCs.

An alternative Quad Cities specific model using a Probabilistic Safety Shutdown Analysis (PSSA) has not been reviewed internally by Exelon or externally by a PRA Peer Review Team. Therefore, the pilot process will be performed without the aid of PRA input from the Shutdown mode of operation as allowed by the NEI Guideline.

3.3 RESULTS OF INDEPENDENT PEER REVIEW

This subsection provides a brief summary of the independent peer review of the PRA input to the Categorization Process.

3.3.1 Internal Events PRA

One of the primary inputs to the IDP is the safety significance of SSCs as evaluated using the internal events PRA. Therefore, extra steps have been included in the process to ensure the accuracy of the internal events PRA model and its results.

The NEI Guideline, NEI 00-04, for categorization (Section 2.4.1.2) identifies number of important items that can have a strong influence on the quality of the PRA input and identifies the need to address these in the implementation of Option 2 for the internal events PRA. These include the following:

- Update the PRA within the last 3 years
- Use a PRA Peer Review as an effective method of ensuring quality
- Ensure the PRA has been subject to a quality approach
- Review all elements identified by the PRA Peer Review with Grades below 3
- Review and disposition all A and B facts and observations (F&Os).

3.3.1.1 PRA Update

Exelon has made a commitment to excellence in the operation of its nuclear power plants. One of the tools used in maintaining the continued excellence of the plant is the PSA, and maintaining the risk assessment tool current and up to date is a critical part of that process. During 1998, an extensive update and revision of the PRA model was performed. The final model was implemented in April 1999.

3.3.1.2 PRA Peer Review

One of the methods to assure PRA quality is through the use of an independent PRA Peer Review process. Figure 3.3-1 provides the conceptual flow of the information from the PRA Peer Review to the IDP. As can be seen, the independent PRA Peer Review results are inputs to the characterization of PRA quality which in turn is direct input to the IDP, and is also part of the Option 2 submittal to the NRC.

Quad Cities has undergone a thorough PRA Peer Review. The Quad Cities PRA Peer Review Process used the industry guidelines, NEI 00-02, as the basis for the peer review.

The PRA Peer Review was carried out on the Quad Cities internal events model used in the Option 2 analysis. The results of the Peer Review are thoroughly documented. [Ref. 13] The Peer Review Team was composed of qualified personnel with no conflicts of interest. Their qualifications are presented in the documented PRA Peer Review. A summary of the Peer Review results is presented in Section 3.3.1.3.

3.3.1.3 Examination of PRA Peer Review Results

As noted, the Quad Cities internal events PRA has been subjected to the industry PRA Peer Review process. Table 3.3-1 summarizes the grades for the eleven (11) PRA elements reviewed by the PRA Peer Review Team. As can be seen, all element grades are 3 or better. This meets the NEI Categorization Guideline for use in Option 2 applications which states:

> *The industry PRA Peer Review Process (NEI 00-02) represents an acceptable approach to assuring the quality of the base internal events PRA. The NEI 00-02 peer review provides several outputs which are useful in characterizing the quality of the PRA. The first output is a set of element grades, ranging from 1 to 4, which provide a consensus assessment by the peer review team of the usability of the PRA in applications. In the terms of the NEI 00-02 grading scheme, the Option 2 categorization process is a Grade 3 application. Thus, elements receiving a grade of 3 or 4 should be expected to be sufficient to support the categorization process.*

3.3.1.4 Disposition of Critical Findings

The second important output of the NEI 00-02 peer review process are the Fact and Observations (F&Os) which document strengths and weaknesses of specific aspects of the PRA. F&Os which identify weaknesses are classified with an importance ranging from A to D, where A is most important and D is generally editorial.

All F&Os in categories A and B should be reviewed and dispositioned by either:

- *Incorporating appropriate changes into the PRA model prior to use,*
- *Identifying appropriate sensitivity studies to address the issue identified, or*

– *Providing adequate justification for the original model.*

The high priority Fact and Observations derived from the PRA Peer Review process as applied to the Quad Cities internal events PRA are tabulated for each PRA element in Table 3.3-2. Appendix C provides each of the high priority F&Os from the PRA Peer Review. Appendix D summarizes the proposed disposition of these F&Os along with the potential impact of the F&O on the Option 2 PRA application. The Appendix D evaluation provides the basis for meeting the NEI 00-04 guidance. To further augment this evaluation, the following additional information is also available to support the use of the Quad Cities PRA for the Option 2 evaluation.

Some of the insights from the PRA Peer Review are as follows:

- All of the PSA elements identified as part of the peer review were included in the PSA. In terms of the overall assessment of each element, all Level 1 elements were consistently graded as sufficient to support risk significant applications supported by deterministic insights.
- The PRA Peer Review concluded that the level of detail of the Quad Cities PRA model was at the current state of the technology (Grade 3) for all elements.
- The initiating event analysis is well documented, well founded, and clearly supports risk significant evaluations with deterministic input.

- The event trees are well structured, model the plant behavior and operating procedures extremely well and the Plant Damage States (PDS) have been defined in a manner that the Level 1 to Level 2 interface is modeled accurately.
- There has been an excellent job of integrating the various parts of the PSA program.
- The detailed treatment of human interface dependencies is excellent. The documentation is excellent.
- The guidance for performing the quantification is thorough and clearly defined. A traceable interface exists between the quantification process, the initiating event analysis, the success criteria analysis, the supporting system models, human reliability analysis, and the data analysis. The dominant sequences provide a clear understanding of the principal contributors to CDF. The truncation levels used in the analysis are sufficient for determining a realistic estimate of CDF as well as the importances of operator actions, systems, and components in the model. The offsite AC power recovery development is well done.
- All known phenomenology is incorporated into the Level 2 Containment Event Tree (CET) structure and includes dynamic failure modes which is considered a strength.

The two principal critiques of the PRA were as follows:

- A simplified approach similar to the NRC approach in NUREG/CR 6595 was developed to support LERF point estimates using multipliers. This LERF estimate may become limiting (i.e., too conservative) during future applications, but meets the acceptable approach of Regulatory Guides 1.174 and 1.177.
- There needs to be a complete integration of this analysis with the operating staff input, ensuring that plant operating procedures, EOPs, AOPs, and training are consistent with the findings of this analysis.

The two principal critiques are addressed as follows:

- The Level 2 LERF model retains its conservatisms. This conservatism could overestimate the importance of CS and FW, but is considered adequate for the Option 2 evaluation.
- The Human Reliability Analysis (HRA) was reviewed with the operating staff and updated based upon an interview process and simulator observations. The changes in the calculated HEP were reviewed. The judgement of the PRA analysts are that the system importance measures for CS, SBGTS, and Feedwater will not change significantly when the latest HEPs are incorporated into the model.

3.3.1.5 Summary

The Quad Cities internal events PRA has the following salient characteristics consistent with the NEI Categorization Guidelines:

- The PRA was updated within 3 years of the initiation of the Option 2 project.
- The PRA Peer Review was completed.
- Grades for all elements are at 3 or higher.
- The Fact and Observations (F&Os) have been assessed in a preliminary fashion and determined not to modify the PRA results for the Option 2 evaluation. The F&Os have been entered into the Quad Cities commitment system for implementation of the next update.
- The HRA sub-elements regarding operator input were specifically addressed and new HEPs calculated.
- The Option 2 sensitivity studies appropriately investigate the uncertainty in the model results related to final implementation of the B Priority Fact and Observations

Table 3.3-3 summarizes the comparison of the PRA quality attributes compared with the NEI guidance.

It is noted that augmenting the Option 2 application is a performance monitoring program which will indicate if any perceived degradation in SSC performance occurs as a result of changes in Special Treatment. Performance monitoring has been identified by the NRC as a viable technique to supplement decision-making that is based on PRA results. The Option 2 implementation at Quad Cities includes continued performance monitoring of the SSCs consistent with the Maintenance Rule and will provide early indication of any perceived degradation in performance.

Table 3.3-1
SUMMARY OF GRADE ASSIGNMENTS BY PRA ELEMENT

PRA Certification Areas Reviewed	Summary Grade
Initiating Events (IE)	3
Accident Sequences (AS)	3
Thermal Hydraulic Analysis (TH)	3
Systems Analysis (SY)	4
Data Analysis (DA)	3
Human Reliability Analysis (HR)	3
Dependency Analysis (DE)	3
Structural Response (ST)	3
Quantification and Results Interpretations (QU))	3
Containment Performance Analysis (L2)	3
Maintenance and Update Process (MU)	3

Table 3.3-2
SUMMARY OF QUAD CITIES PRA PEER REVIEW FACT AND OBSERVATIONS

Element	Fact and Observations		
	No. of "A" Priority	No. of "B" Priority	Disposition
IE	0	2	[1]
AS	0	1	[1]
SY	0	2	[1]
TH	0	2	[1]
DA	0	1	[1]
HR	0	1	[1]
DE	0	2	[1]
ST	0	0	[1]
QU	0	4	[1]
L2	0	3	[1]
MU	0	8	[1]

[1] Committed to resolution in the next PRA update. An assessment, these insights for the current Option 2 pilot indicated that none of the insights would alter the conclusions of the model. This conclusion is confirmed by the sensitivity studies that are performed with the PRA model as described in NEI 00-04 and the results reported in Section 4.

Table 3.3-3
SUMMARY OF QUAD CITIES PRA QUALITY
ATTRIBUTES COMPARED WITH GUIDANCE FROM NEI

Process Element	NEI 00-04 Guidance	Quad Cities Implementation
PRA Update	Update within 3 years	Update Complete in April 1999
PRA Peer Review	Use PRA Peer Review	Subjected to BWROG/NEI Process for PRA Peer Review (NEI 00-02)
PRA subject to a quality approach	Ensure the PRA has been subject to a quality approach	Internal Engineering Controls are Present for: • Reviews by qualified personnel • Change control process
Review of all PRA elements below grade 3 from PRA Peer Review	Review of all PRA elements below grade 3 from PRA Peer Review	All PRA Element Grades at Grade 3 or better
Review of critical Facts & Observations	Review and disposition of all "A" Fact & Observations	No priority "A" Fact & Observations
	Review and disposition of all "B" Fact & Observations	Priority "B" Fact and Observations were reviewed, and it was determined that the sensitivity calculations performed as part of the Option 2 implementation adequately treats these for purposes of the Option 2 categorization

3.3.2 Fire Events PRA Review

The Fire PRA [Ref. 16] has been subjected to both internal Exelon review and NRC review to assure that the Quad Cities risk conclusions associated with postulated fire initiating events and their impact on plant modifications and procedure changes are understood and reasonable.

The fire events PRA was also reviewed internally at Exelon to ensure that the insights from the internal events PRA Peer Review performed by the BWROG were addressed in the fire events PRA. This added assurance to the robust nature of the fire model for its use in applications.

It is judged that the NRC review satisfies the independent audit process cited in the NEI 00-04 guidelines [Ref. 1] for categorization.

In addition, see the results of the independent review of internal events in Section 3.3.1 because these also apply to the fire events PRA model.

3.3.3 Seismic Margin

The seismic margins analysis is not a PRA input to the IDP. No additional insights from the reviews are noted.

3.3.4 Other External Events

The “other” external events were screened using NRC deterministic criteria. No additional insights from the reviews are noted.

3.3.5 Shutdown Events

The shutdown configuration control process is a deterministic process that does not use PRA input for characterization to the IDP. No additional insights from the reviews are noted.

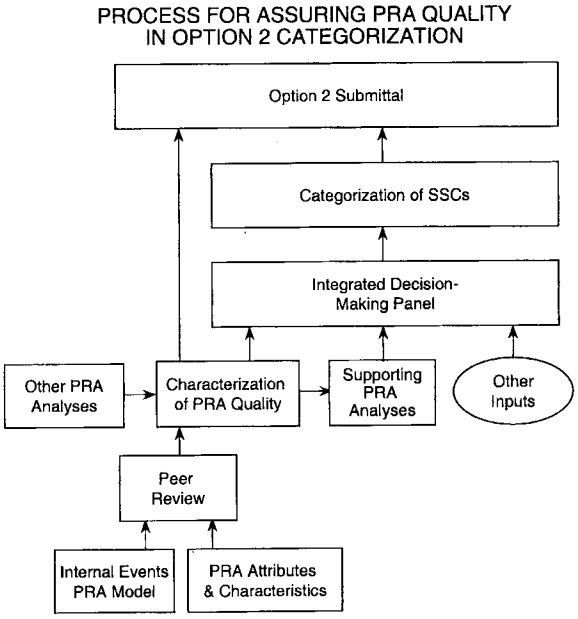

Figure 3.3-1. Process for Assuring PRA Quality in Option 2 Categorization

3.4 IMPLEMENTATION OF QUAD CITIES RISK-INFORMED CATEGORIZATION

As part of the BWROG pilot project, a select group of plant systems are evaluated using the process outlined in the NEI, "Industry Guideline for Risk-Informed Categorization and Treatment of Structures, Systems and Components," [Ref. 1]. These systems are the Core Spray System, Standby Gas Treatment System, and the Feedwater System. These systems were selected based on the results of a survey of BWROG members. The survey considered the FV and RAW importances from the internal events PRAs from a number of plants to identify systems of low safety significance that are classified as safety related and systems of high safety significance that are classified as non-safety related. Based on the survey results, a BWROG subcommittee identified Core Spray, Standby Gas Treatment, and Feedwater as candidate systems for the pilot program.

Purpose

This subsection briefly describes the three systems selected to demonstrate the process and their interface with Quad Cities plant operations and with the PRA model.

Before proceeding to the discussion of the individual systems, the following is a brief characterization of the categorization approaches used in the pilot study.

General Treatment of Categorization Approaches

The categorization process follows the NEI Guideline for both probabilistic and deterministic approaches for the assessment of the systems, structures, or components (SSC) category. The categorization process has several features that are discussed generally here to provide background for the approach as it is implemented here and in Section 4. These general features of the categorization process discussed here are the following:

- Categorization by function

- Categorization considering implicitly modeled SSCs

- Categorization by component, train, or system

This subsection is focused on the identification of the functions that can be performed by the SSCs in the selected systems. The following describes the rationale for this approach.

Categorization by Function

The risk-informed process can be carried out at the component, train, or system level to assess the importance. However, as noted earlier, the component, train, or system may have different functions. For example, the Core Spray System includes two injection valves in series for each train. These two injection valves have the following two functions:

- To open when required for RPV injection via Core Spray.

- To maintain the primary system pressure boundary by acting as pressure isolation valves.

Therefore, consistent with the NEI Guidelines, the risk-informed categorization process is performed on a function level. The function level, as opposed to the system level, is required because systems have multiple functions, which may have different risk importance in terms of core damage or source term impact. Because the system functions are of interest rather than the systems themselves, it is appropriate to collect risk information on the function level. Table 3.4-1 provides the following for the three pilot plant systems for the Quad Cities plant:

- The system

- The functions of potential importance
- The function description
- Whether the function is modeled in the PRA

The interpretation of Special Treatment requirements will be on an individual SSC basis. This will then require the interpretation of the safety significance of the functions with respect to the SSC. The general approach used in the pilot study is that if an SSC has any one function determined to be safety significant, then that SSC is placed in the safety significant category.

Table 3.4-2 lists the three pilot systems along with the functions they support. Table 3.4-2 also summarizes the Safety or Non-Safety related categorization of the system function at Quad Cities.

Categorization Affected by Implicit Modeling

Risk analyses can model components either explicitly or implicitly. Examples of explicitly modeled components are the Core Spray pumps, which are modeled in the risk analyses using plant specific failure rates. Examples of implicitly modeled components in the Core Spray system are the Core Spray spargers which are considered necessary for the system to perform the design basis function, but which are not explicitly represented in the risk model because they are not required to meet the PRA success criteria to prevent core damage or LERF within the 24 hour PRA mission time. The implicit modeling of components is generally performed to simplify the risk model and is usually associated with either of the following types of SSCs: (1) passive components with much higher reliability than the active components in the risk model; (2) SSCs not required to meet the success criteria of the PRA.

Categorization by SSC

The application of the NEI process to Quad Cities has used an approach that includes the use of successive screening processes to maximize the benefit associated with the analysis compared with resources expended. The risk-informed process can be carried out at the component, train, or system level to assess the importance.

The use of the screening processes have their basis in the recognition that the criteria for safety significance determination have their thresholds set at a component level. If an entire system can be shown to meet these stringent threshold requirements, then the entire system can be treated as low safety significant. This can be shown graphically in Figure 3.4-1.

The methodology allows any one of these approaches. The technique used here relative to the probabilistic criteria of Fussell-Vesely and RAW is to show that the most limiting condition (i.e., the entire system) can meet the criteria developed in the NEI Guideline for individual components. If this can be done, then the categorization process for moving SSCs from the safety significant category to the low safety significant category are considered complete for the system. If this cannot be shown, then the SSCs which constitute the train are assessed relative to the NEI Guideline criteria and dispositioned accordingly.

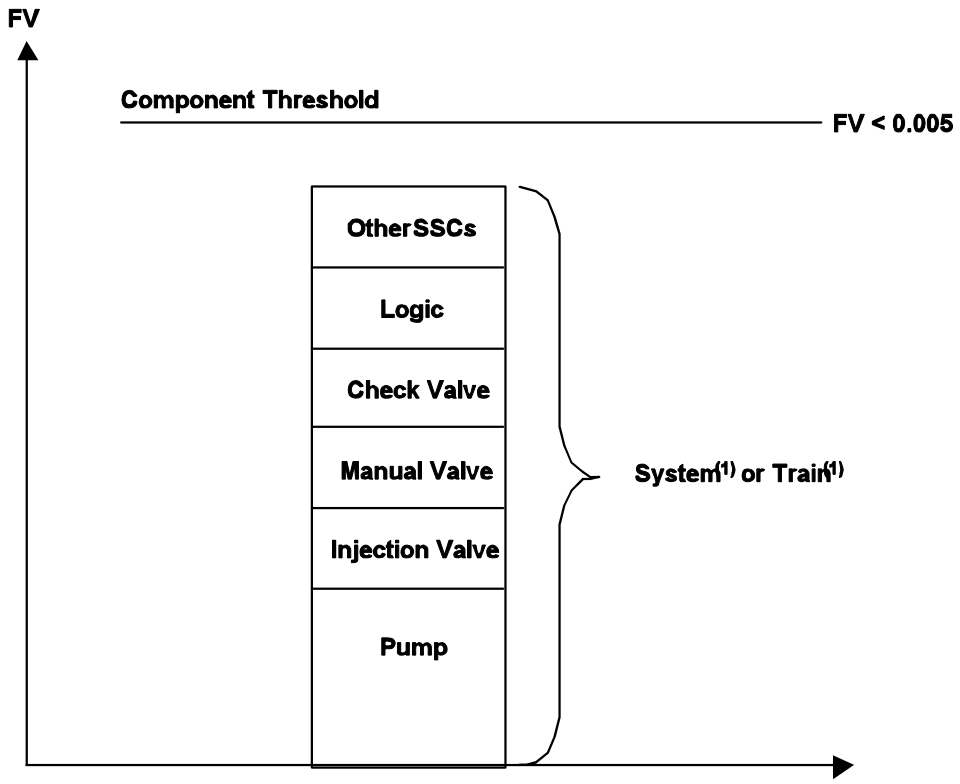
FV
Component Threshold
FV < 0.005
OtherSSCs
Logic
Check Valve
Manual Valve
Injection Valve
Pump
System(1) or Train(1)

Figure 3.4-1 Fussell Vesely - Calculation and Comparison with Safety Significant Criteria

(1) Each of the individual SSCs is below the FV threshold if the system FV is less than the component threshold

Table 3.4-1
SYSTEM FUNCTIONS FOR OPTION 2 CATEGORIZATION

System	Function	Function Description	
Core Spray	RPV Injection	Prevent fuel clad melting during a LOCA by spraying water directly onto the core. Core Spray is used in conjunction with the Automatic Depressurization System (ADS) and the High Pressure Coolant Injection (HPCI) system to protect the reactor core in all postulated liquid or steam pipe breaks. This includes breaks ranging in size from those in which the core is adequately cooled by the HPCI system alone up to and including the design basis accident LOCA. This is a safety related function.	RPV inje consider injects in injection compone modeled does not and injec damage
	Spray Distribution (Sparger)	Provide a spray pattern covering the entire core to ensure complete cooling to all areas of the core above the jet pumps following a DBA LOCA. This is a safety related function.	Not expl by RPV
	Debris Retention	Prevent impact of molten debris on containment which could potentially cause a loss of containment function. This debris cooling function can occur either inside the RPV (to prevent breach) or outside on the drywell floor. This is not a safety related function.	Modeled
	Flood Prevention	Assure isolation of the Core Spray lines to mitigate potential reactor building flooding and loss of torus water inventory due to a Core Spray line breaks. This is not a safety related function.	Flooding suction p located i basemen have bee consider PRA inte because the risk p

Table 3.4-1
SYSTEM FUNCTIONS FOR OPTION 2 CATEGORIZATION (Continued)

System	Function	Function Description	
Core Spray (Cont'd)	Keep Fill	Provides suction for ECCS keep fill system. This is not a safety related function.	Not mod system a mitigatio
	RPV Boundary Protection/ Containment Isolation	RPV Pressure Boundary is maintained by the Core Spray injection pipe. Isolates CS injection lines. Two aspects of the isolation function are considered: - - Pressure isolation function between high RPV pressure and low pressure CS pipe - - Containment isolation function These are safety related functions.	The high interface Quad Ci evaluatio injection consider ISLOCA Other co are scree consider isolation the envir containm
	Containment Flooding	Core Spray can be used to flood containment via the RPV using the CCST as an external water source. This alignment is part of the Quad Cities EOPs and SAMGs, but it is not a design basis safety related function.	Not curr potential manual a
Standby Gas Treatment System	Filter effluent during release to environs.	Provides a method to exhaust primary or secondary containment atmosphere, in a controlled manner, during situations where gaseous and particulate radioactive material need to be removed prior to discharge. This serves to minimize the amount of radioactive discharge and prevents ground level release. This is a safety related function.	Not cred has no si frequenc
	Maintain negative pressure in secondary containment	The SBGTS is designed to maintain the Reactor Bldg. at a negative pressure of 0.25 inches of water while treating and exhausting 4000 scfm ±10%. This is a safety related function.	Not cred has no si frequenc

	Containment Vent	For very small vent paths, SBGT may be used to reduce primary containment pressure. This is a non-safety related function.	Not cred small dia inadequa accidents
Feedwater System	Provide makeup equivalent to steam generation	The motor driven feedwater system provides the primary (normal) means of supplying water to the reactor and maintaining reactor water level under reactor operating and trip conditions. This is not a safety related function.	FW Mak
	Containment Isolation/RPV Pressure Boundary	Containment isolation (isolates FW injection lines). The Feedwater injection lines provide a small portion of the RPV pressure boundary This is a safety related function.	Explicitl Cities PR breaks ou conseque RPV bre impact.
	Provide HPCI, RCIC, SSMP, RWCU flow path to reactor	(Self explanatory) This is a safety related function.	Passive p modeled
	Provide flow path for Zinc and Hydrogen injection	(Self explanatory) This is not a safety related function.	Not mod for accid
	High Pressure Feedwater heating	(Self explanatory) This is not a safety related function.	Not mod for accid
Feedwater (Cont'd)	Low Pressure Feedwater heating	(Self explanatory)	Not mod for accid
	Feedwater Flow Regulation	(Self explanatory) This is not a safety related function.	Modeled
	Flood Prevention	The pathway of flow from the condensate discharge to the RPV is a passive pipe. The ability of the pipe to prevent an internal flood is relied upon in the plant design to prevent damage to other equipment.	Non Safe

Table 3.4-2
SUMMARY OF SAFETY CATEGORIZATION

Systems	Trains	Functions	Safety Related/ Non-Safety Related
Core Spray	A B	RPV Injection	Safety Related
		Spray Distribution	Safety Related
		Debris Retention	Non-Safety Related
		Flood Prevention	Non-Safety Related
		Keep-Fill	Non-Safety Related
		Containment Isolation/RPV Boundary Protection	Safety Related
		Containment Flooding	Non-Safety Related
SBGTS	A B	Filter Effluent	Safety Related
		Maintain Negative Pressure in Secondary Containment	Safety Related
		Containment Vent (2”)	Non-Safety Related
Feedwater	A B C	RPV Makeup	Non-Safety Related
		Containment Isolation/RPV Boundary Protection	Safety Related
		HPCI, RCIC, RWCU Flow Paths	Safety Related
		Zinc and H_2 Flow Path to RPV	Non-Safety Related
		High Pressure FW Heating	Non-Safety Related
		Low Pressure FW Heating	Non-Safety Related
		Feedwater Flow Regulation	Non-Safety Related
		Flood Prevention	Non-Safety Related

3.4.1 Core Spray

The Core Spray functions are discussed for the safety related functions first and then those functions considered non-safety related.

3.4.1.1 RPV Injection Function

The Core Spray system (Figure 3.4-1) injection function is modeled in the Quad Cities PRA as a means to provide RPV injection under accident conditions. The RPV injection function is safety related because it is relied upon in the UFSAR to meet design basis requirements. Failure of the Core Spray injection function is defined as a loss of both Core Spray loops. Pump failure, loss of function of certain key valves, or loss of key support systems will cause failure of the corresponding Core Spray loop. The major assumptions used in the construction of the fault trees are listed below:

1. The “local faults of pipe” (i.e., pipe rupture, leak, open drain valves, etc.) in the Core Spray system are not included in the fault tree model construction, since their contribution to the probability of system failure, compared to other components, is insignificant.
2. There are no preventive maintenance requirements that lead to component unavailability during reactor operation. Corrective maintenance is modeled at the train level.
3. It is assumed that the Core Spray system is in a normal alignment (i.e., suction from the suppression pool).

   Core Spray can also be aligned to take suction from the CCST. This alignment is not modeled. The CCST alignment requires a local operator action to open a manual valve located in the CS Room, and this action is judged to be a relatively high failure probability.

4. It is assumed that only one Core Spray loop may be unavailable for corrective maintenance at any given time. This assumption is based on the Technical Specification requirement that the reactor be in cold shutdown within 24 hours if neither loop is available.

5. Plugging of suction strainers was modeled during all events because of the potential for lagging debris to migrate to these strainers. Because of the design of the torus suction inlet strainers, in conjunction with the general clean nature of the suppression pool water, plugging of suction strainers is considered to have a low failure probability. Different failure values were used in the PRA for different initiating events based upon the perceived likelihood of lagging migration; large LOCA is perceived as the most severe such challenge.

6. Loss of Core Spray room cooling will not lead to failure of the Core Spray pumps. The technical justification for this assumption is contained in a report prepared for the Quad Cities Nuclear Power Station by the Nuclear Fuel Services department of the Commonwealth Edison Company, RSA-Q-90-02.

7. Failure of the minimum flow valve to close on increasing pump flow would not prevent adequate Core Spray flow to the reactor vessel. This assumption is valid due to the small size of the min-flow line (1 ½ inch diameter) compared to the Core Spray injection pipe (12 inch diameter). Failure of the minimum flow valve MO1-1402-38A(B) to open, when CS is initiated, could cause the CS pump to overheat, possibly fail the pump, and fail the system. Failure of this valve to open is included in the fault trees.

8. Failure of 1-1402-4A(B), the test line valve, to close (if open) or remain closed is considered flow diversion. The probability that the full flow test line valve is open at any given time is estimated at 1E-03, based on review of the QCOS 1400 procedures. This valve receives a close signal upon system initiation but is subject to closure failure on

demand, as are all valves. No recovery of the failed valve during the 24 hour mission time is credited in the base fault tree logic.

9. Passive faults (e.g., failure to remain open, failure to remain closed) for normally-closed or normally-open valves, which are not required to change state for the safety performance of the system, are not included in the fault trees per the fault tree guidelines.

10. The common cause component groups used in the Core Spray models are listed below. Common cause failure to start and common cause failure to run were both modeled for the Core Spray pumps.

Component	ID
Core Spray Pumps	1-1401-1A(B)
Motor Operated Valves	1-1402-25A(B) 1-1402-38A(B)
Common Cause and Miscalibration of Pressure Switches	1-263-52A(B)

11. Premature opening of RV1-1402-28A would not cause a flow diversion and fail the system. This assumption is based on the two inch diameter relief valve line size compared to the twelve inch diameter main line size.

12. Failure of the ECCS Keep Fill system is assumed not to cause failure of the CS system. Failure of the ECCS Keep Fill system is annunciated in the control room and the discharge piping must be pressurized as part of the plant Technical Specifications. If stop-check valve 1-1402-8A(B) were to stick open it is assumed that ECCS Keep Fill System water would be diverted back to the torus, a low pressure would occur in the Keep Fill system and an annunciation would be received in the control room.

13. Timer/relays 287-124A and 287-124B are not modeled. These relays are 8.5-minute time delays that will initiate RHR, CS, and ADS if a low reactor water level condition exists for longer than 8.5 minutes even though reactor pressure is above 325 psig. However, Quad Cities Emergency Operating Procedures (QGAs) instruct the operator to inhibit ADS automatic initiation if level cannot be maintained above -59 inches. Also, the RHR and CS systems are not capable of providing injection if reactor pressure is greater than 325 psig. Therefore, these relays provide no function important to RHR and CS initiation.
14. Electrical contacts are not explicitly modeled.
15. Automatic initiation only models low-low RPV level (and the low reactor pressure permissive) signals. High drywell pressure signals are conservatively not modeled.
16. Pressure switches 52A and 52B are included in the Core Spray model for low pressure permissive logic on the Core Spray and LPCI injection valves.

The boundaries of the Core Spray system model are limited to include only those components that could singly, or with other failures, fail an entire Core Spray loop. These boundaries are described below.

1. The Core Spray system includes the ECCS suction header with its suction lines (including the screens) from the torus, the suction valves from the torus and CCSTs, the Core Spray pumps, and all Core Spray valves up to the spray headers.
2. Pumps include the mechanical pump/motor assemblies and all auxiliary equipment attached, the cubicle coolers, and their respective circuit breakers.
3. The ECCS logic signals required for automatic initiation of Core Spray are common to other systems (i.e., RHR, HPCI, RCIC, and ADS). These portions of the Core Spray logic circuitry are modeled in the Quad Cities PRA Common Actuation System (CAS)

notebook as a CAS signal from the support systems event tree to Core Spray and other systems and are not included in the Option 2 pilot study of Core Spray.

4. The pump and motor-operated valve circuit breakers are included within their respective component boundaries.

3.4.1.2 Spray Distribution Function

The Core Spray sparger is located inside the RPV and provides the spray distribution pattern over the core from the Core Spray injection.

The Core Spray sparger for spray distribution function is safety related because it is relied upon in the UFSAR to meet design basis requirements.

The Core Spray sparger is considered necessary to meet the design basis requirements of a large LOCA in the recirculation line. The consequences of not meeting the licensing conditions do not meet the requirements for assignment of the condition to core damage or LERF prescribed in the PRA Applications Guide or in the Quad Cities PRA. Therefore, the Core Spray Sparger although required to meet the licensing requirements established in 10CFR50 is not required to assure that adequate water is available to the RPV to prevent core damage and LERF.

3.4.1.3 Core Spray Impact on ISLOCA Frequency

The Containment Isolation function is safety related because it is relied upon in the UFSAR to meet design basis requirements. The containment isolation function that is explicitly modeled in the PRA is the preservation of the pressure isolation barrier between the RPV and the Core Spray.

The CS system consists of two independent coolant injection loops per unit (Figure 3.4-2), resulting in two potential ISLOCA pathways. Each pathway has a testable check valve inside the drywell (MO1-1402-9A for Loop A and MO1-1402-9B for Loop B) and AC-motor-operated

isolation valves outside the drywell. The inboard isolation valves (MO1-1402-25A for Loop A and MO1-1402-25B for Loop B) are normally closed, while the outboard valves (MO1-1402-24A for Loop A and MO1-1402-24B for Loop B) are normally open. A reactor vessel low pressure permissive signal (325 psig) is required before both valves may be opened simultaneously. This arrangement permits periodic testing of either valve while maintaining two-valve isolation between the low pressure CS piping and the high pressure reactor piping.

An ISLOCA could be caused either by rupture of both the check valve and the closed AC-motor-operated valve (ACMOV) or by rupture of the check valve with the ACMOV left open after its stroke test.

The frequency of an ISLOCA due to CS at Quad Cities is 5.7E-8/yr.

3.4.1.4 Debris Retention Function

The debris retention function is not safety related because it is not relied upon in the UFSAR or in other NRC commitments to meet design basis requirements.

The debris retention function is a severe accident mitigation measure that is used as part of strategies implemented after exiting the Emergency Operating Procedures (EOPs).

3.4.1.5 Flood Prevention Function

The Reactor Building flood prevention function is not safety related because it is not relied upon in the UFSAR or in other NRC commitments to meet design basis requirements.

The flood prevention function relies on the passive reliability of the Core Spray pipe system and the associated components to prevent a leak or break. In addition, there are operator actions that can be implemented to prevent flooding even if a break were to occur.

3.4.1.6 Keep-Fill Function

The keep-fill function is not safety related because it is not relied upon in the UFSAR or in other NRC commitments to meet design basis requirements during an accident response.

The keep-fill system suction is normally open and operating to maintain the ECCS system filled and pressurized.

3.4.1.7 Containment Flooding Function

The containment flooding function is not safety related because it is not relied upon in the UFSAR or in other NRC commitments to meet design basis requirements.

The containment flooding function is part of the severe accident response and is called upon after other mitigation measures specified in the EOPs are ineffective in maintaining RPV water level.

3.4.2 Standby Gas Treatment

The Standby Gas Treatment System (SBGTS) design basis functions are to:

- Filter and exhaust primary and secondary containment atmosphere in a controlled manner when required.
- Maintain the reactor-building (secondary containment) atmosphere at a negative pressure of -0.25 WC.

3.4.2.1 Filter Effluent Filtration Function

The SBGTS (Figure 3.4-3) is typically required for filtering and exhausting of the primary and/or secondary containment atmosphere during refueling or maintenance outages that require opening of the reactor pressure boundary. It may also be required after a design basis accident (Large LOCA) from at-power conditions. In the DBA scenarios at-power, no core damage is calculated to occur and radioactive releases are small and typically limited to at-power, releases from leaking fuel rods (that are within Tech Spec requirements) or releases from activated particles or gases in the reactor coolant. Even assuming the TID source term for the DBA LOCA does not result in a LERF contribution because the containment remains intact for the DBA LOCA evaluation. With containment intact and containment isolation available, such releases pose no threat to the public should the SBGTS become unavailable. The SBGTS filtering and exhausting function during normal (within design basis) operation is therefore not important to public safety using the specified surrogate risk measures of core damage frequency and large, early release frequency (LERF).

- Should the SBGTS, or parts thereof, become inoperable while the unit is at power, a manual shutdown would be required per the Technical Specifications.

Inoperability of the SBGTS can require a manual shutdown of the unit. This is not explicitly modeled in the PRA, but it is included in the manual shutdown initiating event frequency calculation.

- The severe accidents with containment failure cause the reactor building blow-out panels to function. This creates a substantial SBGTS bypass. The environmental conditions caused by the severe accidents would also exceed the equipment qualifications of the SBGTS. The SBGTS is therefore determined not to be effective in the Quad Cities PRA for reducing radioactive releases following the postulated severe accidents with containment failure, i.e., the LERF contributors.

3.4.2.2 Containment Isolation Function

The SBGTS interfaces with the Torus/Drywell Vent (TDV) system that has both a containment isolation function and a function to vent the containment, but no part of the SBGTS has a containment isolation function. The SBGTS is therefore not credited for containment isolation in the PRA.

3.4.2.3 Containment Venting Function

The SBGTS can be also used to vent the primary containment via the TDV 2” diameter vent lines at pressures below 25 psig. However, the 2” vent lines are inadequate to provide any substantial relief capability for containment pressure control. In the PRA severe accidents, the pressure will be above 25 psig for accidents requiring containment pressure control and the vent path from the TDV to the SBGTS will be isolated per procedure. Containment venting is then directed to be via the 18” TDV lines to the TDV system. The SBGTS is therefore not credited for containment venting in the PRA. It is further assumed that failure to isolate the vent path from the TDV to the SBGTS will defeat containment venting. Given that the isolation damper between the TDV and the SBGTS is 1-1601-63, which is part of the TDV system, the SBGTS has no role in defeating containment venting.

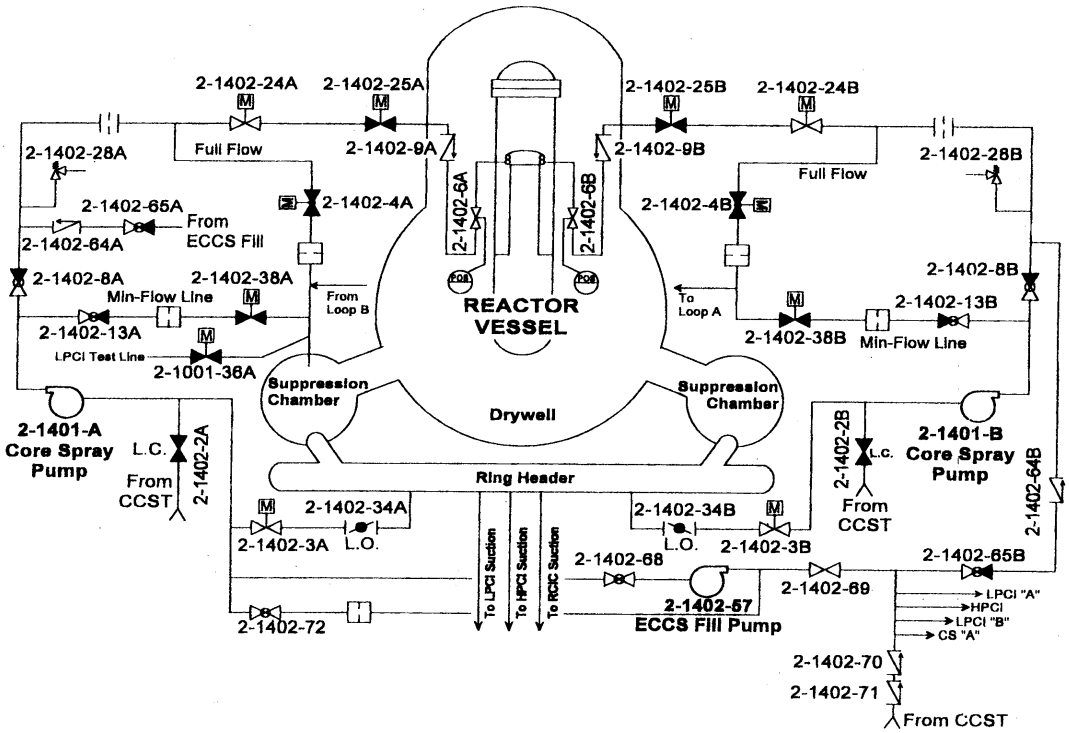

Figure 3.4-2. Core Spray System

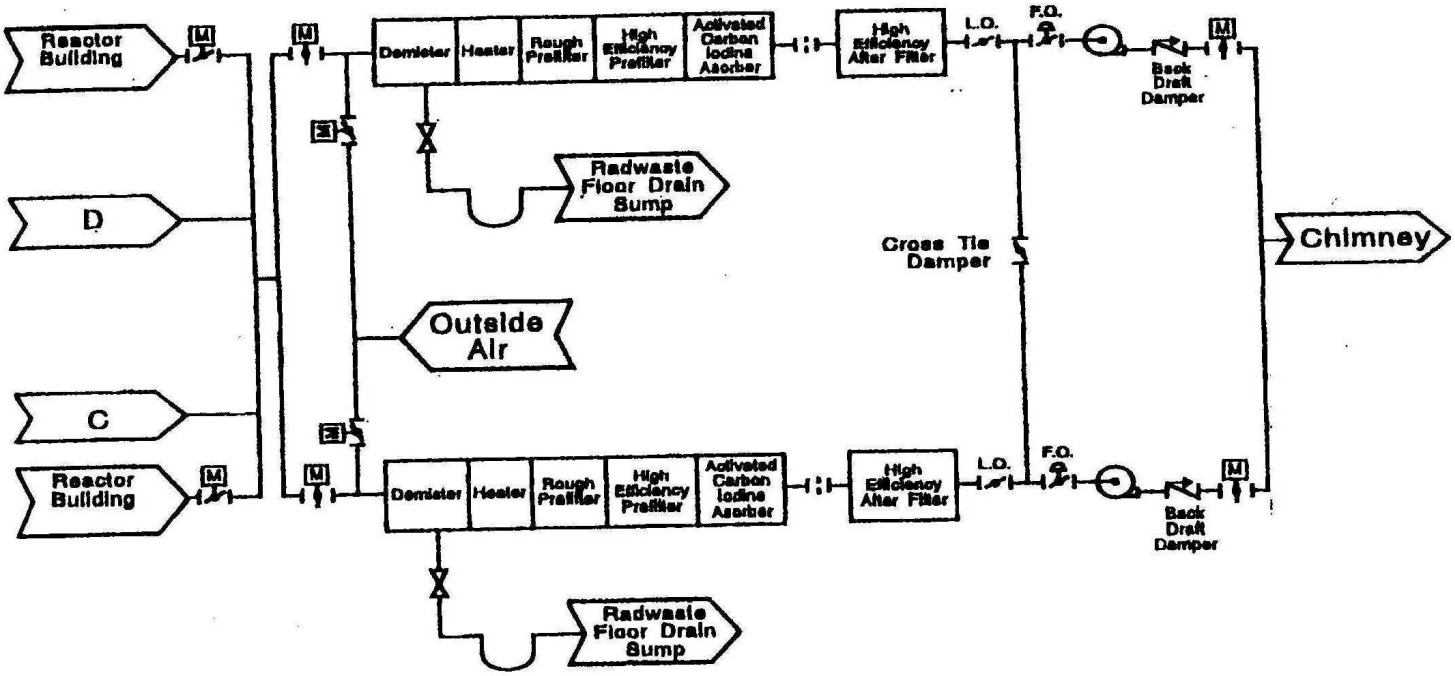

Figure 3.4-3. Standby Gas Treatment System Figure

C = U1 Purge (Torus/Drywell)
D = U2 Purge (Torus/Drywell)

3.4.3 Feedwater

The feedwater system is selected as one of the systems to be investigated because of its potential to be safety significant even though it is not safety related. Similar to other systems investigated, the feedwater system to be analyzed needs to be delineated by drawing a boundary around the SSCs to be included. As with other systems, the support systems are not included within this boundary. These support systems are treated for their safety significance on their own. Consistent with this philosophy, the condensate system, the hotwell, and the hotwell makeup are not part of the feedwater system addressed in the pilot study. These systems can be expected to have similar results to the feedwater system, but they would be the subjects of a separate evaluation.

The feedwater system functions are identified in Table 3.4-1 and are further discussed in the following subsection. These functions include the following:

- Containment Isolation
- Flow path for HPCI, RWCU, SSMP and RCIC to the RPV
- RPV pressure boundary
- RPV injection
- Provide flow path for Zinc and hydrogen injection
- High pressure feedwater heating
- Low pressure feedwater heating
- Feedwater flow regulation

The integrity of the feedwater flow path to the RPV is addressed in three functions:

- RPV injection where flow blockage is addressed
- Flood prevention where the integrity of the system outside the outboard isolation valve is assessed
- RPV boundary integrity where the integrity of the system inside the outboard isolation valve is assessed

These three functional slices address the system integrity and the integrity of the flow path in support of RPV injection.

The feedwater SSCs are generally non-safety related and therefore are to be placed in either RISC 2 or RISC 4 categories. However, certain parts of the feedwater system serve safety related functions to:

- Provide RPV and containment isolation
- Prevent flooding
- Provide flow path for HPCI

The SSCs that participate in these functions have safety related requirements that are not modified by the Option 2 evaluation.

3.4.3.1 Containment Isolation Function

The feedwater injection check valves provide a safety related function to isolate a break in the feedwater line outside containment.

3.4.3.2 HPCI/RCIC Flow Path to the RPV Function

The feedwater pipes to the RPV provide the pathway used by HPCI and RCIC for RPV injection. As such, the feedwater flow path is safety related. SSMP and RWCU pathways to the RPV are also provided by the FW injection lines.

3.4.3.3 RPV Pressure Boundary Function

The feedwater lines to the RPV inside the containment isolation valves have the safety related function to prevent a LOCA and therefore preserve the RPV pressure boundary.

3.4.3.4 RPV Injection Function

The primary function of the Feedwater (FW) system (Figure 3.4-4) is to supply the reactor vessel with demineralized feedwater at a rate equal to that of steam generation, up to 9.7×10^6 lbm/hr (19,600 gpm) at 100% reactor power. During power operations, these components provide the condensate with necessary pressure boost, preheating, and impurity removal. The feedwater must be regulated (controlled) to match the reactor steam generation rate and maintain sufficient water level in the reactor.

When the reactor is not generating steam for power operation, the FW system may be used to provide makeup to the reactor vessel in the removal of decay heat. The preheating and cleanup functions are not essential to cooling the reactor after shutdown or following a failure to scram challenge.

The FW system as an injection source is included in the PRA analysis because it is the primary (preferred) means of supplying water to the reactor and maintaining reactor water level after a reactor trip. After a reactor trip, the FW system may remain operable to provide feedwater to the reactor, or the FW may be recovered if it was tripped or otherwise became unavailable during the transient.

Failure of the FW system injection function is defined as the inability to supply the reactor vessel with feedwater at a rate equal to that of steam generation in response to a non-operating (shutdown) event, including an ATWS event. The failure of feedwater flow may be caused by loss of condenser hotwell water source, loss of condensate/condensate booster or reactor feed pumps, loss of feedwater flow path (including valves, condensers, heaters, demineralizers, etc.), or loss of feedwater control. Feedwater heating and chemical quality treatment are not required to support the shutdown mission of the FW system. The major assumptions used in the construction of the PRA fault tree models are listed below:

1. The FW system is in normal operation with the reactor at 100% power at the time of the transient. During 100% power operation, three of the four condensate/condensate booster pumps and two of the three reactor feed pumps are required.
2. While the reactor is in normal operation, two of the three reactor motor driven feed pumps are running. In the fault tree it is assumed that the 1C and 1B feed pumps are running with the 1A pump in standby.
3. During normal power operation, three of the four condensate/condensate booster pumps are running. In the fault tree it is assumed that the 1D, 1C, and 1B condensate/condensate booster pumps are running with the 1A pump in standby.
4. In accordance with QOP 600-3, it is assumed that during high power operation the hydraulically operated feedwater regulating valves (HO 1-0642A&B) are in automatic operation mode.

5. Upon loss of offsite power, FW is made unavailable. Because of the significant amount of time required to restore the system (fill and vent), feedwater and condensate are not credited following loss of power initiating events.

6. No formal procedure exists for alternating the FW pumps. However, the pumps are rotated following maintenance, and run-time is assumed to be approximately equal for each pump.

7. The reactor feed pumps are dependent upon successful operation of one of the vent fans. RFP vent fan 1A is assumed to be running and RFP vent fan 1B is assumed to be in standby. All pumps depend on TBCCW for pump cooling and pump oil cooling during operation.

8. During normal operation, automatic actions such as starting of pumps selected for automatic start, automatic operation of recirculation valves, and automatic feedwater control are assumed in the model. Responses to failure of the automatic actions above and all other necessary equipment changes or operations must be accomplished by manual operator actions. Recirculation flow is needed during low flow situations that exist during the 24 hours after a scram; therefore, the model reflects that the recirculation valve failure will fail the FW pumps ability to provide the required recirculation flow.

9. In response to a reactor shutdown event, reactor feed pump recirculation flow paths are required for successful pump operation. However, it is assumed that flow through a condensate/condensate booster pump would be adequate to prevent pump failure even if FCV 3401, the condensate/condensate booster recirculation valve, were not opened. Condensate/condensate booster pump recirculation would also be provided by the reactor feed pump recirculation flow paths.

10. For normally operating reactor feed pumps (i.e., FW pump 1B and 1C), failure to continue to run is considered in the fault trees. Failure to start and failure to run are

included for the standby reactor feed pump (i.e., FW pump 1A). Common cause failure to run is included for all reactor feed pumps.

11. Assumptions for the condensate/condensate booster pumps differ from the reactor feed pumps as each condensate pump shares a motor with a condensate booster pump. Since failure-to-start is usually due to motor or electrical problems, the condensate/condensate booster pump is considered as one unit for this failure mode. Failure-to-run is considered for condensate and condensate booster pumps separately. Common cause failure to run is also applied to condensate and condensate booster pumps separately.

12. Backflow through a failed reactor feed pump, condensate or condensate booster pump due to failure to close its respective check valve is modeled in the fault tree. However, backflow through standby pumps is not modeled since it is assumed that a check valve failure-to-close would have been identified during normal operation.

13. Normally open valves that are not required to change state for the safety performance of the system and that are tested quarterly or more often are treated as locally locked open.

14. Normally closed valves that are not required to change state for the safety performance of the system are not included in the fault tree due to low failure probability.

15. Plugging is not included for the FW system since it is a normally operating clean system. The following components are not included in the fault tree:

SJAE Condensers	1A-5401 1B-5401
Gland Steam Condensers	1A-5603 1B-5603
Off Gas Condenser	1A-5407 1B-5407
Condensate Demin	1-A-5501 1-B-5501 1-C-5501

	1-D-5501 1-F-5501 1-G-5501
Drain Cooler	1A1-3102 1A2-3102 1A3-3102
Feedwater Heaters	1A1-3101 1A2-3101 1A3-3101 1B1-3103 1B2-3103 1B3-3103 1C1-3104 1C2-3104 1C3-3104 1D1-3105 1D2-3105 1D3-3105

16. Only one reactor feed pump and one condensate/condensate booster pump and one feedwater regulating valve are needed to provide the necessary flow for adequate decay heat removal after a transient initiating event.

17. Because the Small Break LOCA (SLOCA) break size is defined around the 900 gpm makeup capacity of the two makeup pumps, failure of either one will result in failure of the hotwell makeup system.

18. Failure of TBCCW is assumed to directly result in failure of RFPs, condensate pumps, and booster pumps.

19. RFPs 1B and 1C are assumed to be normally running and RFP 1A is assumed to be in standby. As such, discharge check valves 3208B and C for RFPs 1B and 1C are assumed to be functional and thus not modeled; but discharge check valve 3208A for standby RFP 1A is modeled.

20. FW injection lines to RPV are assumed to be normally in use with all valves in the injection lines functional. As such, the check valves on the FW injection lines are not modeled in the fault tree (check valves 220-59A, B; 220-62A, B; 220-59; and 220-58A, B).

The boundaries of the FW system model are limited to include only those components which could impede the ability of the FW system to supply sufficient condensate water from the condenser hotwell to the reactor vessel. These boundaries are described below.

1. The condenser hotwell only includes the hotwell, hotwell instrumentation, and valves controlling makeup to the hotwell from the CCST. LOCA initiators (excluding small LOCA) require hotwell makeup from the Standby Coolant Supply (SBCS) for long term injection because the volume in the CCST is considered insufficient for these events.
2. Since feedwater heating and water quality are not required for successful operation, all steam heating sources and water chemical treatment sources are not included in the FW models. Only the feedwater side of components are considered.
3. The pump train includes the pumps and their respective circuit breakers, discharge check valves and inlet and outlet isolation valves. Because a FW Pump cannot start without its auxiliary lube oil pump operating (which allows low pressure >6 psig start permissive actuation), the auxiliary lube oil pump is also included in the pump boundary.

3.4.3.5 Flowpath for Zinc and Hydrogen Function

This is a non-safety function and is also not critical to the PRA evaluation of CDF or LERF.

3.4.3.6 High Pressure or Low Pressure Heating Function

This is a non-safety function and is also not critical to the PRA evaluation of CDF or LERF.

3.4.3.7 Feedwater Flow Regulation Function

This is a non-safety related function, however it is critical to the PRA response to a transient and therefore is modeled in the PRA.

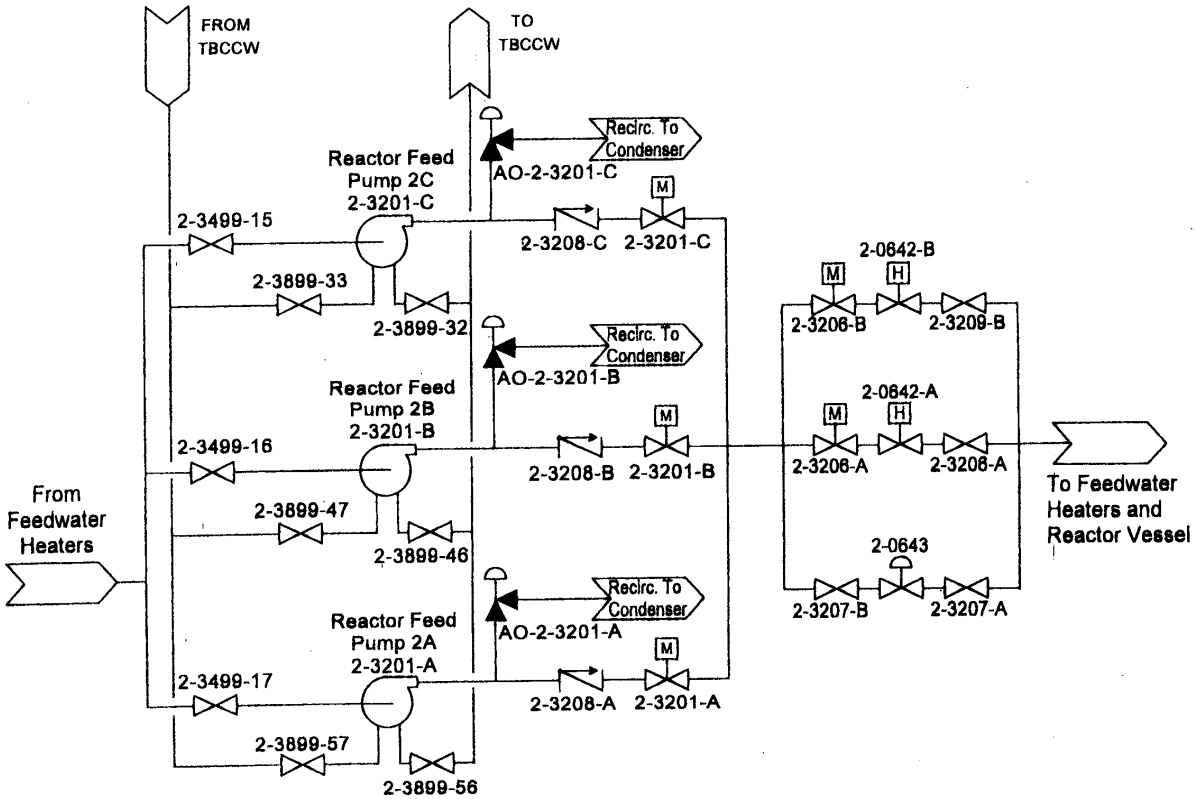
FROM
TBCCW
TO
TBCCW
Recirc. To
Condenser
AO-2-3201-C
Reactor Feed
Pump 2C
2-3201-C
2-3499-15
2-3208-C
2-3201-C
2-3899-33
2-3899-32
2-0642-B
2-3206-B
2-3209-B
Recirc. To
Condenser
AO-2-3201-B
Reactor Feed
Pump 2B
2-3201-B
2-0642-A
2-3499-16
2-3208-B
2-3201-B
2-3206-A
2-3206-A
To Feedwater
Heaters and
Reactor Vessel
From
Feedwater
Heaters
2-3899-47
2-3899-46
2-0643
Recirc. To
Condenser
AO-2-3201-A
2-3207-B
2-3207-A
Reactor Feed
Pump 2A
2-3201-A
2-3499-17
2-3208-A
2-3201-A
2-3899-57
2-3899-56

Figure 3.4-4. Feedwater System

3.5 SUMMARY OF INFORMATION GATHERING TO SUPPORT CLASSIFICATION

This section summarizes the characteristics of the Quad Cities PRA that are important in establishing the probabilistic risk inputs to the Risk-Informed process. The following characteristics are summarized in Table 3.5-1 for each of the potential risk contributors:

- Methodology
- PRA quantification
- Uncertainty attributes
- Degree of detail
- PRA Quality

Table 3.5-2 is a brief summary of the PRA Peer Review findings on the Quad Cities internal events PRA.

3-67

Table 3.5-1

SUMMARY OF THE QUAD CITIES PROBABILISTIC RISK ASSESSMENT (PRA)
INPUTS TO THE RISK-INFORMED PROCESS

Risk Contribution	Methodology	PRA Quantification	Degree of Detail	Uncertainty	
Internal Events	Full Level 1 and Level 2 PRA consistent with current technology	Quantification available and used to support Option 2	Detail consistent with current PRA technology. (See PRA Peer Review discussion in Section 3.3.)	Uncertainty propagation for Level 1 resulted in an Error Factor of approximately 6.	Th de do • •

Table 3.5-1

SUMMARY OF THE QUAD CITIES PROBABILISTIC RISK ASSESSMENT (PRA
INPUTS TO THE RISK-INFORMED PROCESS (CONTINUED)

Risk Contribution	Methodology	PRA Quantification	Degree of Detail	Uncertainty	
Internal Events (Cont'd)					Th ap

Risk Contribution	Methodology	PRA Quantification	Degree of Detail	Uncertainty	
					ar re 3.
Internal Fires	Full Level 1Fire PRA consistent with current technology. No LERF model for fire analysis.	Quantification Available.	Substantial detail consistent with Level 1 internal events.	No current uncertainty propagation.	Si E R C
Seismic	Seismic Margin assessment performed in support of QUAD CITIES IPEEE submittal..	No PRA model	N/A	N/A	IP
Shutdown	ORAM/SENTINEL using qualitative deterministic approach.	No PRA model	N/A	N/A	E co E w
Shutdown (Cont'd)	PSSA model for one outage forms approximate risk basis.	Approximate for 1 outage; not used in Option 2 assessment	Detail to train level.	None	R co E

Table 3.5-2
CHARACTERIZATION SUMMARY FOR INPUT TO IDP

Internal Events PRA

Characteristic	Peer Review Summary
Quad Cities PRA reflects the as-built, as-operated plant.	No items of non-conformance identified.
Quad Cities PRA Elements not meeting Grade 3 (desired Level for Option 2) of the Peer Review Process	No Elements below Grade 3.
A and B Fact and Observations (F AND Os)	No Priority A Fact and Observation identified. All 25 Priority "B" Fact and Observations have resolutic None are expected to have any substantial quantitative ir
Sensitivity analyses required to disposition any open F&Os.	None.

3.6 RISK MEASURES AND GUIDELINES FOR CATEGORIZATION

The NRC PRA Policy Statement and subsequent issuance of Reg. Guide 1.174 demonstrate the NRC's commitment to the continued interest in establishing PRA as a valuable input to the decision-making process for future licensing decisions.

The risk-informed inputs to regulations are structured to address two important risk measures:

- Core damage frequency (CDF)
- Large Early Release Frequency (LERF)

These two surrogate risk measures have been defined in Regulatory Guide 1.174 as the ones to be used in assessing changes to regulations and characterizing the input from risk assessments for use by decision makers. In the Option 2 evaluation, both the NRC in Appendix T [Ref. 8] and NEI in NEI 00-04 [Ref. 1] have also adopted these two risk measures as appropriate for considering the risk impacts of changes to Special Treatment requirements. The definitions of these two risk measures are taken directly from the Quad Cities PRA and are consistent with the PSA Applications Guide and are provided in Section 1.4.

- Using these risk measures, the NEI Guideline specifies that candidate SSCs can be identified to the IDP using importance parameters of Fussell-Vesely (FV) and Risk Achievement Worth (RAW) calculated from the PRA relative to these risk measures of CDF and LERF.
- FV identifies the maximum benefit associated with improving the SSC, i.e., by taking the component to a perfect condition (zero defects).
- RAW identifies the maximum degradation in the risk metrics associated with assuming complete failure of the SSC all of the time.

These two importance measures can then characterize the changes in CDF and LERF. The values of the importance measures used as screening criteria are as follows:

- FV > 0.005 = Safety Significant

  or

- RAW > 2.0 = Safety Significant

Special Considerations

For functions that have a very high failure probability assigned in the PRA because it represents a non-tested or hypothetical back up function capability of the system, the corresponding FV could be quite high. However, this is judged to be an anomaly with the importance measures and not an effect that should be included in the Option 2 decision-making process. This includes the following examples:

- CS use for debris retention in Level 2 where the CS system failed or was ineffective in Level 1.

- CS for containment flooding or RPV makeup with suction from the CCST (currently assumed to be = 1.0 failure probability).

These are non-safety related functions which are considered to have relatively high unavailabilities. However, the failure probability when set to 0.0 for the FV calculation could result in a substantial LERF FV importance measure.

The DRAFT NEI Guidelines do not currently address this issue. It is judged that the SSC reliability associated with Special Treatment does not affect the high failure probability assessed for these two functions, i.e., the Special Treatment considerations do not influence the probability and would not increase the reliability of these functions. Therefore, the FV criteria is not applied to these two functions for the CDF or LERF determinations.

4. COMPILATION OF RISK INSIGHTS AND SAFETY SIGNIFICANT ATTRIBUTES

The NEI Guidelines provide a structured method of characterizing the safety significance of the SSCs to be evaluated. This section reports the results of implementing the NEI Guidelines.

For those PRA inputs which specifically address the SSCs, a complete resolution of the model is performed, i.e., a group of presolved cutsets is not used to generate the importance measures. This section provides the safety significance evaluation, i.e., categorization of the three pilot systems in a segregated manner, i.e., by hazard or operating mode. The segregated treatment of the importance measures and associated evaluation is provided as follows:

- Section 4.1 - INTERNAL EVENTS
- Section 4.2 - FIRE EVENTS
- Section 4.3 - SEISMIC EVENTS
- Section 4.4 - OTHER EXTERNAL EVENTS
- Section 4.5 - SHUTDOWN EVENTS

Sensitivity evaluations to assess the variations in the importance measures as a function of changes in assumptions due to extreme effects of parameters such as HEPs, maintenance unavailability, or failure rates are described in Section 4.6.

The integral importance for each system is provided in Section 5.

4.1 INTERNAL EVENTS ASSESSMENT

In this section, the insights and results from the Quad Cities Level 1 PRA Internal Events are collected and presented for the candidate SSCs by SSC function. Each system and its functions are discussed in turn.

The approach to be taken is to examine the following risk insights:

- Whether a complicated initiating event can result from a failure of the system or a spurious actuation.
- What the risk importance measures are for the component/system/train.[1]
- Whether the function has little or no defense-in-depth or whether alternative SSCs are available. The defense-in-depth evaluation for internal events includes the consideration of the frequency of challenges and the number of available mitigation systems. Figure 4.1-2 shows the template used to assess safety significance for the Level 1 internal events evaluation.

---

(1) Screening Approaches

The application of the NEI process to Quad Cities has used an approach that includes the use of successive screening processes to maximize the benefit associated with the analysis compared with resources expended. These successive screens are consistent with the NEI guidelines. The use of the screening processes have their basis in the recognition that the criteria for safety significance determination have their thresholds set at a component level. If an entire system can be shown to meet these stringent threshold requirements, then the entire system can be treated as low safety significant. This can be shown graphically in Figure 4.1-1.

Figure 4.1-1 Fussell Vesely - Calculation and Comparison with Safety Significant Criteria

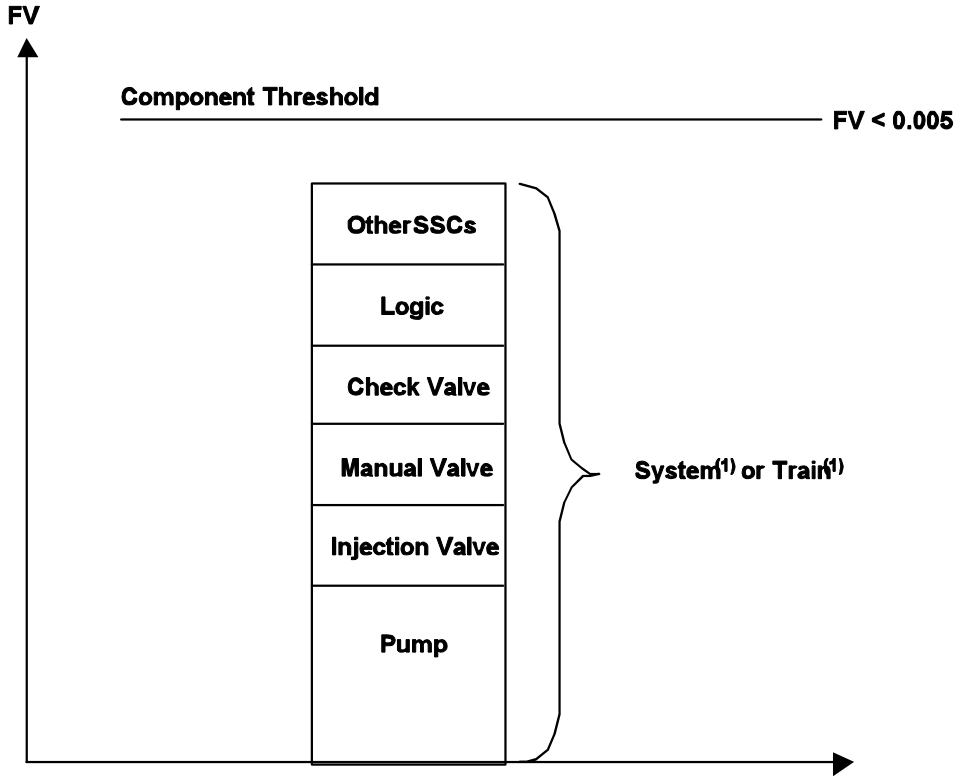

(1) Each of the individual SSCs is below the FV threshold if the system FV is less than the component threshold.

Frequency

Design Basis Event	> 3 diverse trains OR 2 redundant systems	1 train + 1 system with redundancy	2 diverse trains	1 redundant automatic system

> 1 per 1-10 yr	Reactor Trip Loss of Condenser			**POTEN** **SAFETY S**
1 per 10-10^2 yr	Loss of Offsite Power Total loss of Main FW Stuck open SRV (BWR) MSLB (outside cntmt) Loss of 1 SR AC Bus Loss of Instr/Cntrl Air			
1 per 10^2-10^3 yr	SGTR Stuck Open PORV/SV RCP Seal LOCA MFLB MSLB Inside Loss of 1 SR DC bus	**LOW SAFETY** **SIGNIFICANCE CONFIRMED**		
< 1 per 10^3-10^4 yr	LOCAs Other Design Basis Accidents			

Figure 4.1-2. Defense-In-Depth Template to Assess Safety Significance

4.1.1 Core Spray

The Core Spray system functions are described in Appendix A and are the following:

- RPV Injection
- Spray Distribution (sparger)
- RPV Boundary Protection/Containment (Pressure) Isolation
- Debris Retention
- Flood Prevention/System Integrity
- Keep-Fill
- Containment Flooding

System integrity is treated in two separate functions:

- RPV Boundary Protection/Containment Isolation
- Flood Prevention/System Integrity

Each of these functions are evaluated using the NEI Guidelines.

4.1.1.1 RPV Injection

The RPV injection safety related function is primarily a core damage prevention function. It is, however, noted that the same SSCs can also perform a mitigation function to limit the extent of core damage and radionuclide release (see discussion under Sections 4.1.1.4 and 4.1.1.7). All of these functions (RPV injection, debris retention, and containment flooding) are assessed as part of the importance measures developed for the Core Spray system for make-up to the RPV. (Note that the CS injection valves for their pressure isolation function to remain closed are treated separately in the subsection below on Containment Isolation, Section 4.1.1.3.)

Initiating Event

First, the Core Spray system is assessed to determine whether the failure of the system or its spurious operation would cause a complicated initiating event that has a Fussell-Vesely greater than 0.005. Core Spray is not a normally operating system and is not required for continued plant operation. Therefore, the failure of Core Spray does not cause a scram or initiating event. In addition, the spurious initiation of the Core Spray system will result in pump operation and opening of the minimum flow valves to the torus, but will not result in an initiating event.

The conclusion is that the Core Spray system does not cause or contribute to any complicated initiating events. This determination excludes the ISLOCA contribution of the injection valves and RPV Boundary integrity that is treated in a separate subsection. (Section 4.1.1.3).

Risk Insights

The Core Spray RPV injection function importances are presented in Table 4.1.1-1. Table 4.1.1-1 summarizes the train importance measures along with some selected components that survived the model truncation evaluation.

The evaluation does not include the failures of passive components such as the CS pipe and valve bodies. This is consistent with PRA techniques. These passive failures are treated in the RPV pressure boundary and flooding/system integrity functions.

The approach used in this evaluation is to focus on the entire CS system for RPV injection. By demonstrating that the entire system meets the NEI importance guidelines for FV and RAW, each of the SSCs within the system also meet these guidelines.

Table 4.1.1-1 includes system, train and component level importances relative to CDF. The FV importances are all significantly less than 0.005 for components, trains, and the system. For the trains and the Core Spray system as a whole, the RAWs for both CDF and LERF are slightly greater than 1.0, but still are less than the safety significance criteria of 2.0. However, while the Core Spray RPV injection valves for the purpose of opening and supplying RPV injection are found to be of low safety significance, their containment isolation function to remain closed is of higher safety significance and is addressed further below in Section 4.1.1.3.

Table 4.1.1-1 summarizes the FV and RAW importance measures relative to CDF and LERF for the RPV injection function of Core Spray. As can be seen, both FV and RAW measures for Core Spray Train A, Train B, and the entire system are quite low compared with the NEI Guidelines of RAW <2.0 and F-V <0.005.

Defense-in-Depth

NEI 00-04 considers defense-in-depth to require examination of both Level 1 (CDF) and Level 2 (LERF) effects to ensure that adequate systems are available.

As shown by the Core Spray importances in Table 4.1.1-1, the Core Spray system is of low safety significance for RPV injection in the internal events analysis. The quantitative importance determination in Table 4.1.1-1 is logically consistent in view of the substantial number of redundant systems (safety and non-safety) that perform the same function, low pressure RPV injection. This is primarily due to the fact that there are multiple redundant systems for low pressure RPV make-up, namely condensate, RHR (LPCI), SSMP, and Fire Protection in certain cases.

For Level 1, the defense-in-depth evaluation for internal events includes the consideration of the frequency of challenges and the number of available mitigation systems. Figure 4.1-2 shows the template used to assess safety significance for the Level 1 internal events evaluation. For RPV injection, the following additional systems are available:

- LPCI
  - 4 pumps divided into 2 trains
- Condensate
  - Treated as a single system
    - Also uses SBCS for long-term external injection makeup if CCST inventory is inadequate
- SSMP
- Fire Protection System
- CRD

These systems meet all the requirements of the Figure 4.1-2 to allow CS to be placed in the low safety significance category relative to CDF.

For Level 2, the defense-in-depth evaluation for Level 2 considerations includes the following BWR Mark I questions to be answered to ensure adequate LERF mitigation measures:

1. <u>Containment Bypass</u>
   - Can the SSCs initiate or isolate an ISLOCA event?

2. Containment Isolation

- Does the SSC support containment isolation for containment penetrations which are:
  - > 2” in diameter
  - part of a system which is not considered closed a defined in GDC 57,
  - not normally closed or locked closed, and
  - not a part of a normally liquid filled system

The CS system meets the requirements for low safety significance for LERF/Level 2 except for the CS isolation valves which are treated under the separate CS function of Containment Isolation.

The substantial degree of redundancy in the Quad Cities plant for RPV makeup provides more than adequate defense-in-depth for this function.

Summary

All CS components required for RPV injection can be considered as candidates for categorization as low safety significant.

4.1.1.2 Core Spray Distribution Pattern

The ability to provide a spray pattern to the fuel assemblies is a feature of the Core Spray system cited in the Quad Cities UFSAR.

Initiator Impact

The Core Spray sparger has not been identified as the source of a complicated initiating event. It is not used during normal operation and its failure is not considered to cause a credible initiating event.

Risk Insights

This function of the Core Spray system to establish a spray pattern is not modeled in the Quad Cities PRA because it is found from deterministic thermal hydraulic calculations that core damage and LERF, the two surrogate risk measures for Option 2 decision making, are not affected by the spray pattern. The spray pattern characteristics are not critical to the prevention of core damage, the critical feature is the total flow rate from the Core Spray system to the RPV. However, the spray pattern is potentially important to limiting clad oxidation. This function which leads to its listing as safety related is outside of the scope of the PRA.

As the spargers are not explicitly modeled in the Quad Cities PRA, the FV for the Core Spray sparger is 0.0 and the RAW is 1.0. This is based on the detailed PRA thermal hydraulic calculations that indicate that Core Spray is not required to prevent core damage even in a large recirculation line break.

Defense-in-Depth

The defense-in-depth assessment for the Core Spray sparger indicates that while there is no alternative method of producing a water spray pattern above the core region the spray pattern is not necessary to satisfy the safety significance criteria and is adequately provided with a defense-in-depth by:

- Other RPV injection systems
- Containment flooding for the DBA LOCA

Figure 4.1-2 does not apply to the CS sparger function because it does not impact CDF or LERF.

The Level 2 defense-in-depth questions do not apply to the sparger.

The following discussion provides supplemental information to the IDP regarding the safety-significance of the Core Spray function to deliver a spray pattern to the fuel assemblies. The discussion also considers the interface between design basis calculations and PRA calculations as it applies for Option 2 recategorization of systems.

Recent calculations and evaluations (References 35 and 36) address the Core Spray system design basis to provide adequate core cooling via a spray pattern for long-term cooling in BWR cores that have a top peaked axial power shape. The generic BWR design calculations indicate that for the most limiting fuel axial power shapes (i.e., worst time in life), clad oxidation would exceed 17% if the Core Spray system were not available following a Design Basis Accident (DBA), i.e., a large break LOCA in the recirculation suction line. 10CFR50.46 defines this as an unacceptable licensing condition. The conclusion from these generic DBA analyses is that at least one Core Spray loop is

required (based on generic calculations) to avoid exceeding the 17% clad oxidation limit specified in the licensing requirements of 10CFR50 Appendix K. This requirement is attributed to the need for "long-term cooling" of the top of fuel assemblies.

Because of potential issues identified in References 35 and 36 associated with long term cooling following a DBA using cores with top axial peaked power shapes, two approaches are used here to provide additional input to the IDP. The two approaches are:

1) Approach 1: Discuss differences in risk metrics and definitions of successful end states used in the licensing analysis (17% clad oxidation) versus PRA evaluations (core damage).

2) Approach 2: Perform sensitivity calculations to demonstrate risk importance measures used for Option 2 safety significance assessments assuming a restrictive definition of a successful end state (no core damage) corresponding to the licensing requirements of less than 17% clad oxidation.

Then, the results of these two approaches are presented as supplemental information to the IDP for their consideration in the categorization of the Core Spray system, and the "spray" function.

For the first approach, the PRA implications of the calculations [35, 36] on the Core Spray System can be discussed in general and relative to the specific Option 2 PRA application.

The generic BWR design basis calculations [35, 36] indicate that following a DBA LOCA event for the most limiting axial fuel power shapes (i.e., worst time in life) and for at least the peripheral fuel bundles, clad oxidation would exceed 17% and the fuel clad could fragment (crack) when quenched. This is considered to violate the 10CFR50 Appendix K requirements for DBAs.

On the other hand, PRAs have been performed using a different risk metric or unsuccessful end state characterization, i.e., core damage frequency. The core damage definition in the Quad Cities PRA is:

> For the purposes of the Level 1 PRA a surrogate has been developed that can be used as a first approximation to define the onset of core damage. The onset of core damage is defined as the time at which more than two-thirds of the active fuel becomes uncovered, without sufficient injection available to recover the core water level quickly, i.e., water level below one-third core height and falling plus calculated peak core temperatures from MAAP greater than 1800° F.

This definition of core damage is consistent with the PSA Applications Guide [3] and with definitions used by essentially all BWRs [38]. However, the design basis situation examined in References 35 and 36 focuses on the fuel clad structural capability following quenching of the core which results in the potential for cracked fuel elements and the release of fission product gases from the fuel after quenching.

Extensive PRA calculations by the NRC and industry indicate that a coolable geometry can be maintained by a single LPCI pump and core melt progression and RPV breach are both precluded for DBA events in which Core Spray is unavailable. The PRA implementation of these calculations can be found in:

- RMIEP [39]
- NUREG-1150 [40]
- GE LGS PRA [41]

- GE SNPS PRA [Ref. 37]
- GESSAR [Ref. 29]

Therefore, while the specific issues raised in References 35 and 36 appear to potentially have implications relative to the plant licensing basis, there is no impact on the PSA public risk evaluation using the parameters of CDF and LERF because core damage and LERF are precluded by the quenching of the fuel.

References 35 and 36 also state that plant specific analysis instead of this most limiting generic analysis could allow demonstration of the adequacy of the licensing basis without the need for Core Spray. Such plant specific analyses are not available for Quad Cities.

The conclusions regarding the safety significance of Core Spray under the Option 2 program are not directly tied to the licensing analysis.

Option 2 is a risk-informed evaluation using inputs from the available Probabilistic Risk Assessment (PRA) tools and their supporting deterministic analyses to allow the restructuring of special treatment for SSCs. The conclusion from the PRA and deterministic analysis developed as part of the Quad Cities PRA program is that successful prevention of core damage given a DBA does not require a Core Spray loop. This forms the basis of the Option 2 analysis.

For the second approach, in order to demonstrate the sensitivity of the Option 2 conclusions due to the differences between the PRA success criteria and the “design basis” success criteria, the following sensitivity calculation has been performed:

DBALOCAA

Assume that for a DBA size break and location that a Core Spray pump is required. The quantitative impact on the Option 2 importance measures is then computed.

Inputs

Parameter	Value	Basis
DBALOC Frequency	7.9E-6/yr	NUREG/CR 6224 DBA LOCA size and location
CS Failure Probability	7.3E-4	Quad Cities PRA
CS LOOP Failure Probability ($P_{CSA,}$ P_{CSB})	2.1E-2	Quad Cities PRA
CDF	4.6E-6/yr	Quad Cities PRA

Assume that References 35 and 36 define a new accident sequence to be considered to cause core damage in the PRA. Consider the following simplified event tree for reference.

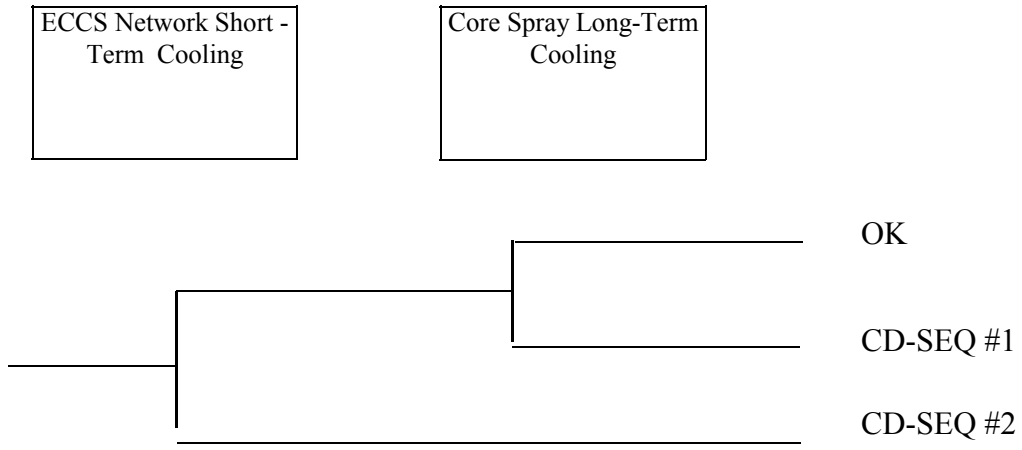

The new accident sequence leading to loss of adequate core cooling is Sequence # 2 (SEQ #2) as follows:

$$CDF = DBALOC * P_{CS} =$$
$$= 7.9E\text{-}6/yr * 7.3E\text{-}4 = 5.89E\text{-}9/yr$$

The internal events PRA importance measures associated with Core Spray SSCs that result when this sequence is added to the PRA can be estimated as the weighted average of the contribution from all sequences plus the new sequence (see Section 5 of Option 2 Report for formula):

Parameter	Calculation	Value	Option 2 Criteria
IFV_{CS}	$= \dfrac{4.6E\text{-}6 * (3.3E\text{-}5) + 5.8E\text{-}9\ (1.0)}{4.6E\text{-}6}$	= 1.3E-3	5E-3
$IRAW_{CSA}$	$= 1 + \dfrac{(1.03 - 1)\ 4.6E\text{-}6 + (28.2\text{-}1)\ 5.89E\text{-}9}{4.6E\text{-}6}$	= 1.065	2.0
RAW_{CSB}	$= 1 + \dfrac{(1.03\text{-}1)\ 4.6E\text{-}6 + (28.2\text{-}1)\ 5.89E\text{-}9}{4.6E\text{-}6}$	= 1.065	2.0

Therefore, the importance measures of FV and RAW associated with the Core Spray SSCs are below the threshold for safety significance even if the more conservative definition of adequate core cooling used in the licensing basis calculations is used for the assessment of Core Spray importance in the Quad Cities PRA.

In summary, two evaluations are presented to examine the safety significance of Core Spray to provide a spray pattern above the fuel. These two evaluations are:

- A deterministic evaluation to consider differences introduced by the definition of a successful end state
- A PRA importance measure calculation using the most restrictive definition of a successful end state.

Both evaluations performed to provide supplemental information to the IDP indicate that the Core Spray function to provide a spray pattern to the fuel assemblies is low safety significant when using a risk-informed approach to the assessments.

Summary

The Core Spray spargers are candidates for categorization as low safety significant using the NEI Guideline.

4.1.1.3 RPV Boundary Protection and Containment Isolation Functions

The RPV boundary protection and containment isolation functions of the Core Spray system are similar in nature and are discussed together.

For containment isolation, the Core Spray injection MOVs and check valves provide the pressure isolation function to prevent overpressurization of the low pressure CS pipe outside

containment from the higher pressure RPV. This is a critical safety related function and is explicitly evaluated in the PRA.

Initiator Impact

Pipe segments inside the containment that can lead to a LOCA initiating event with an isolated containment are considered to have a relatively low set of Fussell-Vesely importance measures (see risk insights below). Therefore, even though they also lead to a complicated initiating event because the main condenser would become unavailable as a heat sink with MSIV closure and containment isolation on low RPV water level, the pipe segments inside containment are identified as candidates for low safety significant. The containment isolation valves have been explicitly treated, and this failure also leads to a complicated initiating event, i.e., an ISLOCA.

An ISLOCA event has significant direct impacts on the ability to safely shut down the plant because of the potential for significant adverse impacts on equipment in the Reactor Building. Therefore, the failure of the Core Spray pressure isolation valves (PIVs) to remain closed is considered a complicated initiator. However, again the FV is less than 0.005.

The remainder of the Core Spray system boundary does not cause one or more complicated initiating events. Therefore, the remainder of the Core Spray system is not safety significant due to this criteria. The Core Spray pipe outside the isolation valves is not rated for RPV pressure. The isolation valves serve the function of preventing a complicated initiating event associated with overpressure of the CS system.

Risk Insights

The RPV pressure boundary is assessed in the PRA by examining the Fussell-Vesely of the Core Spray injection pipe using the large LOCA initiating event. The results for a large LOCA are a FV = 1.01E-02. The Core Spray injection pipe is estimated separately as follows:

The risk assessment can be examined to assess the FV and RAW for the pipe segments inside the containment. These pipe segments are not separated out from other LOCA contributors explicitly treated in the quantified PSA model. This is consistent with most other BWR PSAs and represents an implicit subsuming of this from the model. An estimate of the potential contribution to the large LOCA frequency can be obtained from NUREG/CR-6224 or through the use of pipe rupture operating experience data. These two methods yield the following results:

Source	Core Spray Large LOCA Frequency
NUREG/CR-6224	
Operating Experience Data3.2E-6/Rx Yr[11)]	
5.5E-7/Rx Yr[22)]	

The CCDP for these events is 1E-3 to 1E-4. Therefore, the FV for such failures is 8E-4 or less.

In order to assess the safety significance of the Core Spray (CS) injection valves, a PRA calculation is performed to find the RAW relative to CDF for each of the CS injection valves.

Table 4.1.1-2 summarizes the RAW for the CS injection valves. The ISLOCA RAW is defined as the ratio of the ISLOCA frequency leading to core damage with the valve failed to the base model ISLOCA frequency leading to core damage of 1.1E-07 per year. These RAWs are on the order of 1000 to 2000, which clearly make these valves risk significant. It is noted that when all internal events are combined with the ISLOCA to assess the RAWs of the CS injection valves, the RAWs still remain above 2, i.e., they are in the range of 5.8 to 10.6. It is noted from Table 4.1.1-2 that these ISLOCA accident sequences are also significant LERF contributors, again emphasizing their safety significance.

Defense-in-Depth

The defense-in-depth evaluation for internal events includes the consideration of the frequency of challenges and the number of available mitigation systems. Figure 4.1-2 shows the template used to assess safety significance for the Level 1 internal events evaluation.

For the pipe inside containment, the rupture of this pipe would lead to a large LOCA, but there would still be 3 redundant trains available for mitigation. Therefore, the pipe inside containment does not meet the safety significance criteria.

The RPV pressure boundary is provided with defense-in-depth by having two diverse pressure isolation valves. It is also provided with substantial mitigation capability to cope with a breach in the RPV pressure boundary.

The defense-in-depth capabilities beyond the two series isolation valves in each of the Core Spray loops include the following:

- The low pressure pipe ultimate capability
- The ability to emergency depressurize to reduce the pressurization of the low pressure pipe.
- However, the comparison of defense-in-depth safety significance criteria for Level 2/LERF considerations with the isolation valves indicates that these valves are safety significant.

Summary

The conclusions for the CS injection valves in their function to remain closed as pressure isolation valves are that they are safety significant based on considerations of initiating events, importance measures, and defense-in-depth.

The CS pipe segments inside containment are identified as candidates for categorization as low safety significant based on not meeting any of the criteria for categorization as safety significant.

4.1.1.4 Debris Retention

The Core Spray RPV injection function can also be used to fulfill a function related to cooling debris following RPV breach. This is a critical function as part of accident management but it is merely an extension of the RPV injection function. The evaluation presented in 4.1.1.1 includes this function. Therefore, Core Spray continues to have a low safety significance for the injection function.

4.1.1.5 Flood Protection/System Integrity

Initiator Impact

A break[(1)] in the Core Spray line would not create a complicated initiating event in and of itself. This failure mode is screened from the internal events PRA model, as sufficiently low in probability to be truncated. If it were included in the model it is estimated to be below the NEI criteria for a complicated initiating event, i.e., the FV would be less than 0.005.[(1)] The BOP would remain available and be more than adequate to achieve a safe shutdown condition. If the pipe rupture is an initiating event, the operating crew can take actions to control the reactor and containment parameters to achieve a safe stable configuration. For example, a torus suction line break could result in the draining of the torus. This can be treated by the crew using the motor driven Feedwater and condensate systems for RPV injection. The crew would depressurize the RPV, possibly causing an MSIV closure. The MSIVs at Quad Cities would be opened immediately by the crew to restore the main condenser as a heat sink. In addition, SDC is available for heat removal from the RPV directly. In summary, the internal flood evaluation for Quad Cities determined this failure to be so low in frequency as to be truncated from the internal flooding assessment model. Therefore, the Core Spray suction pipe rupture initiating event has a FV less than 0.005 making this of low safety significance relative to the initiating event criteria.

(1) Pipe breaks as a consequence of failure of isolation valves are already covered. ISLOCA induced failures of the Core Spray line are treated as consequential failures of the isolation valve failures in Section 4.1.1.3.

Risk Insights

The Core Spray system is relied upon to maintain its integrity as part of its fulfilling the Core Spray RPV injection function. The CS pipe segments are considered potential candidates for loss of system integrity and inducing flooding. However, in most PRAs, treatment of passive failures of pipes and components such as valve bodies is not included in the system modeling because of the small failure probabilities involved. The pipe rupture treatment is deferred to the internal flooding analysis. The Quad Cities internal flooding evaluation does not identify any Core Spray pipe failures as risk significant and they are truncated from the internal flooding assessment model.

In addition to the internal flood PRA input, Quad Cities has undergone a PRA application involving a probabilistic assessment of the In-Service Inspection (ISI) of welds in critical systems.

The ISI program evaluated piping systems at Quad Cities consistent with a methodology accepted by the NRC for the purpose of assessing the prudence of the ISI frequency and scope. [Ref. 25] The application to Quad Cities involved the probabilistic assessment of the risk associated with the failures of different pipe segments. The results of the ISI probabilistic assessment are that the Core Spray piping has, in general, been identified as a potential "high consequence" component. Because of the passive nature of the piping and component bodies, they are expected to maintain their integrity. Nevertheless, the conclusion from the ISI study is that substantial portions of the CS pipe should receive the ISI treatment characteristic of "high consequence" segments. The ISI results indicate that the FV for Core Spray pipe, using pessimistic assumptions for pipe break frequency (i.e., break frequencies of 1E-2/yr), would qualify as a high safety significance. However, the best estimate pipe rupture frequency is believed to result in a FV below the threshold for safety significance in the Option 2 program and allows categorization as a low safety significant component for Option 2 consistent with the NEI Guidelines. This result is appropriate despite the fact that the more conservative approach taken in the ISI application retained the CS pipe segments as candidates for the highest level of inspection recommended.

The RAW estimates are considered to not apply to the pipe break case. Specifically, the RAW calculation is considered to be similar to the common cause or initiating event impacts and therefore does not apply to the implementation of the NEI Guidance for Option 2.

In conclusion, the Core Spray piping for the function of flood prevention is evaluated as low safety significance based on the available PRA information and the insights from the ISI PRA application.

Defense-in-Depth

There is defense-in-depth associated with a Core Spray pipe break. This defense-in-depth consists of multiple ways to isolate the resulting flood and multiple ways to fulfill each of the critical safety functions despite an unisolated flood due to a Core Spray break.

Functions Affected	Defense-in-Depth
RPV Injection	FW/Condensate HPCI/RCIC from CCST SBCS to condensate SSMP from CCST or FP
Decay Heat Removal	Condenser Venting SDC

Summary

In conclusion, the Core Spray passive function of flood protection is considered to be highly reliable and to be of low safety significance.

4.1.1.6 Keep-Fill

The Core Spray system acts as a source of water for the keep-fill system. The Core Spray keep-fill function is not safety related because it is not relied upon in the UFSAR or in other NRC commitments to meet design basis requirements.

Initiator Impact

Failure of this function does not result in a complicated initiating event.

Risk Insights

The only function of Core Spray in support of keep-fill is as the suction source of water. In addition, the keep-fill function is not part the quantified PRA because of its low importance at other BWRs. Therefore, the importance of that function can also be judged to be low and result in a low safety significance.

Defense-in-Depth

The defense-in-depth for the function relies on two aspects:

- A controlled shutdown would be performed if the keep-fill function could not be restored.
- The keep-fill failure would not lead to a guaranteed failure of any system function.

Summary

The keep-fill function of the Core Spray system is considered to be of low safety significance.

4.1.1.7 Containment Flooding

Containment flooding is a function that can be partially satisfied by the Core Spray system. It is not included as a safety related function because it is not relied upon in the UFSAR or in other NRC commitments to meet design basis requirements.

Initiator Impact

There are no initiating events caused by this function or failure of this function. See the discussion in 4.1.1.1 under RPV injection for the disposition of initiator impacts.

Risk Insights

The risk evaluation of the Core Spray function for containment flooding is based on the following insights from the PRA:

- The Core Spray flood source is the CCST.
- The CCST is inadequate to provide containment flooding as the sole source.
- The local manual alignment of the CS to the CCST is potentially precluded by the severe accident conditions.
- No credit for this function is included in the Level 2 PRA.

Based on the above, it can be seen that while the Core Spray SSCs may satisfy a part of the containment flooding function, the CS SSCs cannot fulfill the function due to:

- Local operator actions that are precluded.
- Limitations in the total water volume available.

Using these probabilistic insights, the CS system is found to have approximately 0.0 FV importance and 1.0 RAW with respect to the containment flooding function for both CDF and LERF risk measures.

Defense-in-Depth

The Quad Cities plant has the ability to flood the containment using the Standby Coolant System (SBCS) which utilizes the SW and condensate systems to inject external water sources into containment.

Summary

In summary, the Core Spray function to flood containment is considered of low safety significance.

4.1.1.8 Summary of Core Spray Safety Significance Evaluation

Each of the Core Spray functions have been evaluated to determine their safety significance consistent with the NEI Option 2 Implementation Guidelines, NEI 00-04.

Table 4.1.1-3 summarizes the results of the safety significance determination using the following three different aspects affecting the systems safety significance:

- PRA importance measures
- Degree of complication due to an induced initiating event
- Defense-in-depth

As can be seen, the one function that is considered a candidate to be categorized as safety significant is the containment isolation function of the Core Spray injection valves. Each of the other functions is determined to be a candidate to be categorized as low safety significant.

Table 4.1.1-1

QUAD CITIES CORE SPRAY IMPORTANCES FOR INTERNAL EVENTS PRA FOR RPV INJECTION FUNCTION

Description		CDF (Per Rx Yr)		LERF (Per Rx Yr)	
		FV	RAW	FV	RAW
Component	CS TRAIN 1A VALVES[(2)]	1.22E-06	1.00	[(1)]	[(1)]
Component CS TRAIN 1B VALVES[32)]	1.23E-06	1.00	[(1)]	[(1)]	
Component	CORE SPRAY TRAIN 1A UNAVAILABLE DUE TO MAINTENANCE	1.92E-06	1.00	[(1)]	[(1)]
Component	CORE SPRAY TRAIN 1B UNAVAILABLE DUE TO MAINTENANCE	1.94E-06	1.00	[41)](1) Componen tCS PUMP 1A-1041 FAILS1.35 E-051.00[(1)(1)]C omponent CS PUMP 1B-1041 FAILS1.35 E-051.00[(1)(1)]T rainCS	

				Train 1A1.7E-051.030.001.03TrainCS Train 1B1.7E-051.030.001.03	
System	CS Train 1A and Train 1B	3.3E-05	1.12	0.00	1.13

Table 4.1.1-2
SUMMARY OF THE CORE SPRAY INJECTION VALVE RAW IMPORTANCE MEASURES AS PART OF THE CONTAINMENT ISOLATION FUNCTION

CS Valve	CDF Due to ISLOCA Given Valve Is FailedISLOCA RAW Relative to CDF[51)]	Total CDF RAW	Total LERF RAW	
CS LOOP 1A CV	2.22E-05	1009	5.8	7.7
CS LOOP 1A MOV	4.43E-05	2019	10.6	14.4

CS LOOP 1B CV	2.22E-05	1009	5.8	7.7
CS LOOP 1B MOV	4.43E-05	2018	10.6	14.4

Total ISLOCA Contribution

ISLOCA Frequency (LPCI+CS) = 1.1E-07 per year

ISLOCA CCDP = 0.19

ISLOCA CDF (LPCI+CS) = 2.20E-08 per year

Table 4.1.1-3
CORE SPRAY RISK INSIGHT RESULTS - INTERNAL EVENTS

Function	Importance				Complicated Initiating Event	Defense-In-Depth
	CDF		LERF			
	FV	RAW	FV	RAW		
RPV Injection	3E-05	1.12	0.0	1.13	None	Adequate
Spray Distribution	0.0	1.0	0.0	1.0	None	Adequate[1]
Containment Isolation/RPV Boundary	NE [2]	5.8-10.6	NE [2]	7.7-14.4	Yes	Marginal
	<0.005	--	<0.005	--	No	Adequate
Debris Retention	0.0	1.0	0.0	1.0	None	Adequate
Flood Prevention	[3]	[5]	[3]	[5]	None[4]	Adequate
Keep-Fill	0.0	1.0	0.0	1.0	None	Not Required
Containment Flooding	0.0	1.0	0.0	1.0	None	Adequate

(1) No Defense-In-Depth for the spray pattern; but this is not required to meet the safety significance goals

(2) Not Estimated; function is safety significant due to RAW.

(3) Importance measures were not calculated because the accident sequences were found to be so low as to be truncated from the internal flood PRA.

(4) The failure of the CS pipe itself is not considered to be a complicated initiating event.

(5) RAW calculations for pipe breaks are not considered appropriate and these importance measures have not been calculated. (Note, these SSCs have been truncated from the PRA model for Quad Cities internal flood.)

4.1.2 Standby Gas Treatment System

The Standby Gas Treatment System (SBGTS) functions, as described in Appendix A and summarized in Table 3.4-1, include the following:

- Filter effluent during release to environment
- Maintain negative pressure in secondary containment
- Containment Vent

The NEI Guidelines specifically recognize that SSCs may be either explicitly or implicitly modeled in the PRA. The SBGTS is modeled implicitly in the PRA. SBGTS does not impact the CDF assessment. In addition, detailed thermal-hydraulic analyses of severe accidents in BWRs with containment failure has indicated that the SBGTS does not influence the magnitude of radionuclide release due to the lifting of the Reactor Building blow-out panels which then creates a parallel unfiltered release path.

The modeling (or the absence of specific basic events for SBGTS) is a reflection of the Level 1 and Level 2 PRA analysts assessment that SBGTS does not influence either the CDF or the LERF determination. It, therefore, is not explicitly included in the quantitative PRA model.

4.1.2.1 SBGTS for Filtration and Maintenance of Negative Reactor Building Pressure

SBGTS is a system that has the capability to provide mitigation of severe accident releases from an intact, but leaking, containment. The SBGTS provides filtration of containment leakage using activated charcoal filters. The filtration operates effectively in combination with the function of the SBGTS to maintain the Reactor Building at a negative pressure during the accident progression.

SBGTS is effective as long as the Reactor Building is not bypassed (e.g., the Reactor Building blowout panels do not activate).

Initiating Event

The SBGTS has been evaluated to determine whether there are any complicated accident initiating events that may be caused by these SSCs. SBGTS does not cause an initiating event except in those rare cases where a Technical Specification Limiting Condition of Operation (LCO) may be violated. In such cases, a controlled manual shutdown would be implemented. The conclusion from this review is that there are no initiators caused by SBGTS with the exception of controlled shutdowns as a result of potential Technical Specification directions.

Risk Insights

The SBGTS is only a mitigation system. The SBGTS provides no accident prevention function to preclude core damage. Therefore, the Quad Cities Level 1 PRA does not include SBGTS as a system in its models. Consequently, there is no safety significance to SBGTS as measured relative to the CDF surrogate risk measure.

LERF contributors involve severe accident sequences that involve radionuclide releases that completely bypass the mitigation capability of the SBGTS. Therefore, there are no SBGTS functions that mitigate LERF releases.

SBGTS is designed to address only a very small portion of the accident spectrum, i.e., accidents with intact containments and small leakage. These accident types are not LERF contributors. Therefore, the PRA evaluation has determined that SBGTS is not a system that needs to be explicitly modeled in the LERF quantification.

Because neither SBGTS nor any part of SBGTS has any risk significant functions that affect the PRA risk metrics of CDF or LERF, the associated FV importances are all identically 0.0, and the associated RAW importances would all be identically 1.0. Using the agreed-upon risk metrics of CDF and LERF, SBGTS is of low safety significance.

Defense-in-Depth

There are redundant trains of SBGTS, and the Reactor Building itself provides retention mechanisms that can act to mitigate radionuclide releases. Therefore, there are defense-in-depth mechanisms available.

Because of the specialized nature of the system, i.e., for design basis leakage processing, the system has a very narrow window of effectiveness when viewed over the entire spectrum of accidents, i.e., from anticipated transients to severe accidents with containment failure.

The Figure 4.1-2 defense-in-depth chart is not applicable to SBGTS because SBGTS does not affect CDF. The Level 2/LERF assessment questions also indicate that SBGTS is a candidate to be categorized as low safety significant.

Therefore, it is not surprising that this system, which has limited capability, is neither a preventor nor an effective mitigator of severe accidents.

Summary

This function of SBGTS is found to be of low safety significance.

4.1.2.2 SBGTS for Containment Venting

The containment venting interface with SBGTS is for those cases where the smallest vent paths are adequate, i.e., the 2" diameter vent lines. For these cases, the SBGTS can be used to process the discharge, the filter system of the SBGTS is capable of treating these discharges. This is not a safety related function.

Initiator Impact

No initiator is determined to result from the 2" vent function or its failure. The failure to isolate the 2" vent line could lead to a Technical Specification condition that leads to a controlled shutdown. This is not considered to be a complicated initiating event.

Risk Insights

The ability to vent the containment is considered an important aspect of the Quad Cities prevention and mitigation schemes. However, as part of the PRA evaluation, it has been determined that the 2 inch containment vent lines are not effective in the ability to vent containment. Therefore, these containment vent lines have no impact on the calculated CDF or LERF. This means that the importance measures relative to CDF and LERF show low safety significance. The model explicitly excludes success based on this vent path. A hard pipe vent path that does not use portions of the SBGTS is the path that is relied upon for containment venting.

Defense-in-Depth

The 2" venting option is among the options available to the operating crew to control containment pressure. Other alternatives include:

- RHR

- DW Sprays
- SDC
- Hard Pipe Vent

Adequate defense-in-depth exists to support containment pressure control if the 2" vent through SBGTS is unavailable.

4.1.2.3 Summary of SBGTS Safety Significance Evaluation

Each of the SBGTS functions have been evaluated to determine their safety significance consistent with the NEI Option 2 Implementation Guidelines, NEI 00-04.

Table 4.1.2-1 summarizes the results of the safety significance determination using the following three different aspects affecting the system's safety significance:

- PRA importance measures
- Degree of complication due to an induced initiating event
- Defense-in-depth

Each of the SBGTS functions is determined to be low safety significance.

Table 4.1.2-1
SBGTS RISK INSIGHT RESULTS - INTERNAL EVENTS

Function	Importance[1]				Complicated Initiating Event	Defense-In Depth
	CDF		LERF			
	FV	RAW	FV	RAW		
Filtration	0.0	1.0	0.0	1.0	None	Redundant trains of SBGTS
Maintain Negative Pressure in Secondary Containment	0.0	1.0	0.0	1.0	None	None
Containment Vent (2”)	0.0	1.0	0.0	1.0	None	Multiple Systems

(1) The importance measures are quantified here using the implicit modeling of SBGTS in the PRA. In other words, the SBGTS effect on CDF and LERF has been evaluated as part of the PRA and determined to not impact either surrogate risk measure. Therefore, the importance measures can be estimated.

4.1.3 Feedwater System

The Feedwater system functions are described in Appendix A and summarized in Table 3.4-1. The Feedwater system functions include the following:

- Containment Isolation/RPV Pressure Boundary
- RPV makeup by FW
- HPCI, RCIC, SSMP, RWCU flowpath to the RPV
- Zinc and H_2 injection flow paths
- High Pressure FW heating
- Low Pressure FW heating
- FW Flow regulation
- Flood Prevention

Each of the Feedwater functions is non-safety related except the Containment Isolation/RPV Pressure Boundary function and the HPCI/RCIC flow path to the RPV.

The following subsections group similar functions together where feasible.

4.1.3.1 Containment Isolation/RPV Pressure Boundary Function

The feedwater injection lines form part of the RPV pressure boundary inside containment. The Feedwater (FW) injection check valves provide RPV and containment isolation in the event that the RPV is at higher pressure than the Feedwater System and for the case where there is a break outside containment in the FW injection line.

Initiator Impact

Pipe segments that can lead to a LOCA initiating event with an isolated containment are found to have a relatively low set of Fussell-Vesely importance measures. This estimate is based on pipe rupture failures that could lead to a LOCA inside containment (5.6 E-9/ft-yr) times the feet of pipe inside containment (~250') times the CCDP (~ 1E-2 to 1E-4). This results in a CDF contribution of 1.4E-8/yr or a FV of 3E-3. However, they also lead to a complicated initiating event, because the main condenser would become unavailable. Nevertheless, the pipe segments inside containment are identified as low safety significant based on the low FV.

In addition to the pipe RPV pressure boundary, the containment isolation valves have been explicitly treated. Isolation valve failures lead to a severe initiating event, if coincident pipe rupture occurs. However, the pipe is designed for operating pressure.

Therefore, the failure of the check valves in the open position would not cause an initiator and therefore would not be a complicated initiating event. If the check valves fail closed (a highly unlikely situation), the initiator could become a loss of FW initiator. This is one of the more serious anticipated challenges at Quad Cities. Therefore, the FV for the check valves failure to remain open is estimated. The two train FW system would not be completely disabled by the failure of a single check valve. Therefore, the FV of a single check valve to remain open is estimated based on its impact on RCIC or HPCI and SSMP only. The result is that the FV < 0.005 and the check valves (boundary) are candidates to be categorized as low safety significant based on the initiating event criteria.

Risk Insights

The risk assessment can be examined to assess the FV and RAW for the pipe segments in the containment. These pipe segments are not explicitly treated in the quantified PSA model. This is consistent with most other BWR PSAs and represents an implicit truncation of this from the model. An estimate of the potential contribution to the large LOCA frequency can be estimated from NUREG/CR-6224 or through the use of pipe rupture operating experience data. These two methods yield the following results:

Source	Feedwater Large LOCA Frequency
NUREG/CR-6224	1.4E-5/Rx Yr
Operating Experience Data	1.1E-6 / Rx Yr[61)]

The CCDP for these events is 1E-3 to 1E-4. Therefore, the FV for such failures is 3.5E-3 or less.

The FW injection valves are included in the Quad Cities model as protection against breaks outside containment. The calculated importance measures for the containment isolation function can be derived from the PRA which includes an assessment of the unisolated breaks outside containment.

The CDF and LERF associated with the FW break outside containment (BOC) is 5.3E-12/yr. This means that the FV associated with this SSC is essentially zero for both CDF and LERF.

The RAW is more sensitive and is computed as follows:

$$RAW_{CDF} = \frac{9E\text{-}4}{4.6E\text{-}06} = 196$$

$$RAW_{LERF} = \frac{9E\text{-}4}{3.3E\text{-}06} = 272$$

Defense-in-Depth

The single isolation valve inside containment is the only isolation valve for some parts of the BOC evaluation. Therefore, while the failure probability of the pipe is low, there is no other defense-in-depth available.

Summary

The Containment Isolation function and the RPV pressure boundary are considered safety significant Feedwater SSCs.

4.1.3.2 RPV Makeup Function

This function is non-safety related. The RPV makeup function is a standard function of the normally operating Feedwater system and supports the power generation capability of the reactor. The function is also potentially available after a transient to continue to supply water to the RPV.

Initiator Impact

Total Loss of Feedwater Flow: INEEL [Ref. 24] provides a summary table of the contributors to the total loss of Feedwater flow. The major contributor to total loss of Feedwater flow is directly related to problems within the Feedwater system. These problems include: the trip of the only operating Feedwater pump while operating at reduced power; the loss of a startup or an auxiliary Feedwater pump normally used during plant startup; the loss of all operating feed pumps due to trips caused by low suction pressure, loss of seal water, or high RPV water level; anticipatory reactor trip due to loss of all operating feed pumps; and manual reactor trip in response to feed problems (characteristic of a total loss of Feedwater flow) but prior to automatic reactor trip.

Loss of Feedwater Category	% of Total
Total Loss of Feedwater Flow	54
Loss of Condensate System Flow	20
Loss of Support System	12
Others	14

The FV for loss of feedwater initiator from the internal events PRA is 0.03. This means that the feedwater system as a whole would be considered safety significant.

As an initiating event, loss of FW is loss of the normal inventory makeup supply to the RPV. Loss of FW results in low RPV level and potential RPV isolation on low-low water level. Isolation of the RPV creates a "complicated initiating event" when the FV is greater than 0.005.

Risk Insights

The importance calculations for Feedwater for the RPV injection function can be performed in several ways:

- Individual components
- System unavailability as a whole
- Combination of system unavailability and initiating event

The following are the insights from these three perspectives.

Individual Components

The importance of individual components is calculated directly using the CAFTA features to allow FV and RAW importance measures to be determined. (Common cause events do not have RAW values calculated based on the NEI guidelines.) The Feedwater system at Quad Cities has a number of redundant pathways and components that preclude most individual components from causing a total loss of Feedwater for Unit 1.

There are a number of Feedwater support systems that can lead to a failure of the Feedwater system. However, for the Option 2 calculations, these support systems are not included in the calculation of the Feedwater importance or in the Feedwater SSCs evaluated because the focus of the pilot is only the FW SSCs.

Based on the PRA evaluation and examination of the FW system according to NEI 00-04, only one component has been identified as a candidate for safety significance – i.e., the suction pressure switch.

The single component failure (a suction pressure sensor failure) identified for the Feedwater system is applicable to the Unit 1 PRA model (April 1999). Unit 2 has implemented a 2 of 2 logic scheme that would prevent the single failure from causing the loss of Feedwater. Plant modifications after the freeze date of the PRA were also performed on Unit 1 to eliminate this single component failure. This not reflected in the PRA model. Although installation of the modification to the FW suction pressure sensor logic for U1 occurred beyond the "freeze date" of the PRA model, this single failure has been eliminated from the plant design, resulting in no single component that is safety significant.

System Unavailability

The system unavailability can be assessed for its importance by examining the most limiting component. Based on the RAW criteria, the most limiting single component unavailability would be safety significant.

Combination of System Unavailability and Initiating Event

Table 4.1.3-1 provides the FW system importance measures associated with the FW RPV injection function from the internal events PRA. The table includes system, train and component importances. None of the component FV importances exceed 0.005, and none of the RAW importances exceed 2.0 for the plant design as of January 2001. This would be indicative of a low safety significant system. The traceability of the importance to individual components is not available except as discussed above under the individual components assessment.

The system (non-single failure proof) as a whole has a RAW > 2 and therefore is a candidate safety significant system for the RPV injection function.

Defense-in-Depth

The defense-in-depth evaluation for internal events includes the consideration of the frequency of challenges and the number of available mitigation systems. Figure 4.1-2 shows the template used to assess safety significance for the Level 1 internal events evaluation.

For RPV injection, the following additional systems are available:

- LPCI

  -

  - 4 pumps divided into 2 trains

- Core Spray

  -

  - 2 pumps in 2 trains

- SSMP

- Fire Protection System

- CRD

These systems meet all the requirements of the Figure 4.1-2 for defense-in-depth to allow FW to be placed in the low safety significance category relative to CDF.

The defense-in-depth evaluation for Level 2 considerations includes the following BWR Mark I questions:

1. Containment Bypass
    - Can the SSCs initiate or isolate an ISLOCA event?

2. Containment Isolation
    - Does the SSC support containment isolation for containment penetrations which are:
        - 2” in diameter
        - part of a system which is not considered closed a defined in GDC 57,
        - not normally closed or locked closed, and
        - not a part of a normally liquid filled system

FW for RPV injection meets the requirements for low safety significance for LERF/Level 2 except for the FW isolation valves which are treated under a separate FW function.

In conclusion, there are a large number of systems that can supply RPV makeup. Therefore, there is substantial defense-in-depth.

Summary

The feedwater system for the RPV Injection Function has been evaluated according to the NEI Guideline and it is determined that while all the SSCs have importance measures less than the "safety significant" threshold and there is adequate defense-in-depth, the feedwater SSCs are placed in the safety significant category because loss of feedwater is a complicated initiating event (loss of RPV injection function and FV>0.005). Individual components within the feedwater system have not been singled out as the potential cause of loss of feedwater events. This exercise could result in reducing the number of FW SSCs considered to be safety significant. This exercise has not been included in the preparatory work performed for the IDP.

4.1.3.3 HPCI, RCIC, SSMP, RWCU Flow Path to RPV

The Feedwater flow path to the RPV is treated under three separate sections: 4.1.3.1, 4.1.3.3, and 4.1.3.6. Section 4.1.3.1 evaluates the complete rupture of the pipe segments that are inside containment and unisolable. Section 4.1.3.6 summarizes the treatment of pipe rupture outside the isolation valves that could create a potential flood hazard. The assessment of other failure modes associated with the flow path for HPCI, RCIC, SSMP, and RWCU involve the following failure modes:

- line blockage
- isolation valves fail closed
- diversion of flow away from the RPV

This function is safety related for HPCI. It represents the FW pipe and check valve flow path from the system discharge to the RPV. The function is passive and requires no active components.

There is a small segment of pipe located from the inside isolation valve to the isolation valve upstream of the HPCI/SSMP connection on the "B" FW line or the RCIC connection on the "A" FW line. Blockage in these pipe segments could result in preventing flow from a portion of the FW system and either: (a) HPCI and SSMP or (b) RCIC, respectively.

Initiator Impact

Pipe rupture or flow blockage could cause a complicated initiator that adversely impacts FW, and either (1) HPCI and SSMP, or (2) RCIC, and for the pipe break possibly other Reactor Building equipment. Specifically, a break or blockage in the "A" Feedwater line would cause a loss of the "A" FW injection and RCIC. A break or blockage in the "B" Feedwater line would cause loss of the "B" Feedwater injection and injection from SSMP and HPCI. However, the FV for all modeled components is less than 0.005 by a substantial margin. A pipe break if modeled would also be expected to have a low FV.

Risk Insights

The FW pathway for HPCI and SSMP (FW line B) or RCIC (RW line A) have been assessed in the PRA for blockage-related failure modes and it is found that these SSCs are candidates for the safety significant category.[1] The internal events PRA evaluation indicates that the failure of either FW line by blockage or rupture which causes the loss of HPCI and SSMP or RCIC will result in a RAW greater than 2.0. This leads to this pathway and the associated SSCs being candidates for categorization as safety significant.

(1) The pathway has been evaluated in the Containment Isolation and RPV boundary integrity discussion for FW and has been identified as safety significant. This would include the FW check valves to prevent back flow of HPCI into the FW system. The failure mode modeled in those cases is a failure to close. The failure mode of interest that would compromise this FW function is a failure to open. Regardless of the specific failure mode, the convention used in this evaluation is to consider an SSC safety significant if one of its failure modes is safety significant.

Defense-in-Depth

There is limited, but adequate, defense-in-depth due to the piping failure or blockage disabling selected additional high pressure RPV injection sources.

Summary

The flowpath formed by the FW injection lines for use by HPCI and SSMP (FW-B) or RCIC (FW-A) is found to be a candidate for categorization as safety significant based on its function to act as a flowpath. The same SSCs are also assessed in Section 4.1.3.1.

4.1.3.4 Miscellaneous

This set of functions encompasses the following:

- Zinc and H_2 injection flow paths
- High Pressure FW heating
- Low Pressure FW heating

All of these functions are non-safety related.

Initiator Impact

None of the functions are considered to produce a complicated initiator.

Risk Insights

None of the functions are included in the PRA because they do not affect the post accident assessment of CDF or LERF.

Defense-in-Depth

None of the functions require defense-in-depth for safety considerations.

4.1.3.5 FW Flow Regulation

The function of FW flow regulation is to control the FW flow into the RPV during power and post trip RPV injection.

Initiator Impact

The multiple Feedwater regulation valves are not of a single common design. The failure of the Feedwater regulation valves could be a complicated initiator, i.e., no FW makeup to the RPV.

Risk Insights

The Feedwater regulation function is not calculated to be safety significant from the PRA results.

Defense-in-Depth

There are a large number of systems that can supply RPV makeup. Therefore, there is substantial defense-in-depth.

Summary

Because the complete failure of the Feedwater regulation function would be a complicated initiating event, FW flow regulation can be considered safety significant. The IDP needs to consider the nature of this determination in their deliberations.

4.1.3.6 Flood Prevention

The FW system integrity can be examined from several different perspectives to assess its overall importance to safety. These perspectives include:

- LOCA inside containment
- LOCA outside containment (unisolated)
- System ruptures outside containment

These three different perspectives can each be addressed using the criteria for Safety Significance assessment. First, these are defined more specifically:

> LOCA Inside Containment: This is a LOCA event which occurs inside containment and is unisolable. It results in RPV depressurization and diversion of one feedwater injection train's flow.
>
> This integrity element is treated in Section 4.1.3.1 for RPV boundary integrity.
>
> LOCA Outside Containment (Unisolated): This perspective involves the assessment of a feedwater pipe break outside containment coupled with the failure of the pressure isolation valves to hold. This severe event is treated in the Containment Isolation function assessment, Section 4.1.3.1.
>
> System Rupture Outside Containment: Finally, there is the FW system integrity function for pipes and components outside containment. This function is to prevent the internal flooding effects of a FW break outside containment.

It is this last function of the FW system that is addressed in this section.

Initiator Impact

A break in a FW line could create a complicated initiating event in and of itself. This failure mode is screened from the model as sufficiently low in probability to be truncated. If it were included in the model, it is estimated to be below the NEI criteria for a complicated initiating event, i.e., the FV would be less than 0.005.

Risk Insights

The FW system is relied upon to maintain its integrity as part of its fulfilling the RPV injection function. The feedwater pipe segments can be considered potential candidates for loss of system integrity and inducing flooding. However, the internal flood evaluation for Quad Cities determined this failure to be so low in frequency as to be truncated from the model. Therefore, this failure mode is screened from the model as sufficiently low in probability to be truncated. If it were included in the quantitative model it would be below the NEI criteria for a complicated initiating event, i.e., the FV would be less than 0.005.

In most PRAs, treatment of passive failures of pipes and components such as valve bodies is not included in the system modeling because of the small failure probabilities involved. The pipe rupture treatment is deferred to the internal flooding analysis. It should be noted that because the hotwell contains a relatively small inventory (e.g., 100,000 gal), the resultant flood event if it were to occur would result in substantially less water volume discharged than other water sources. The Quad Cities internal flooding evaluation does not identify any FW pipe failures as risk significant due to internal flooding and they are truncated from the model.

In addition to the internal flood PRA input, Quad Cities has undergone a PRA application involving a probabilistic assessment of the In-Service Inspection (ISI) of welds in critical systems.

The ISI program evaluated piping systems at Quad Cities consistent with a methodology accepted by the NRC for the purpose of assessing the prudence of the ISI frequency and scope.[Ref. 25] The application to Quad Cities involved the probabilistic assessment of the risk associated with the failures of different pipe segments. The results of the ISI probabilistic assessment are that the FW piping has, in general, been identified as a potential "high consequence" component. Because of the passive nature of the piping and component bodies, they are expected to maintain their integrity. Nevertheless, the conclusion from the ISI study is that substantial portions of the FW pipe should receive the ISI treatment characteristic of "high consequence" segments. The ISI results indicate that the FV for FW pipe, using pessimistic assumptions for pipe break frequency (i.e., break frequencies of 1E-2/yr), would qualify as a high safety significance. However, if the best estimate pipe rupture frequency is used, it results in a FV below the threshold for safety significance in the Option 2 program and allows categorization as a low safety significant component for Option 2 consistent with the NEI Guidelines. This result is appropriate despite the fact that the more conservative approach taken in the ISI application retained the CS pipe segments as candidates for the highest level of inspection recommended.

The ISI evaluation identified pipe segments as "high consequence" based on their other functions, i.e., LOCA prevention. Pipe segments that could result in flooding potential were not identified as safety significant.

The RAW estimates are considered to not apply to the pipe break case. Specifically, the RAW calculation is considered to be similar to the common cause or initiating event impacts and therefore does not apply to the implementation of the NEI Guidance for Option 2.

In conclusion, the FW piping for the function of flood prevention is evaluated as a candidate for categorization as low safety significant based on the available PRA information and the insights from the ISI PRA application.

Defense-in-Depth

If the pipe break occurs in the Reactor Building (Steam Tunnel), there is some potential for the water to flow to the RHR corner rooms. However, the primary flow path would be to the torus basement where it is extremely unlikely that equipment used for safe shutdown would be affected.

If the pipe break occurs in the Turbine Building, the principal impact would be flooding of the condensate pump pit which would fail the FW/condensate injection. However, this leaves all the ECCS systems and SSMP to respond. This risk contributor is negligible.

There is defense-in-depth associated with a FW pipe break. This defense-in-depth consists of multiple ways to isolate the resulting flood and multiple ways to fulfill each of the critical safety functions despite an unisolated flood due to a FW break.

Functions Affected	Defense-in-Depth
RPV Injection	HPCI RCIC SSMP LPCI Core Spray
Decay Heat Removal	RHR for Suppression Pool Cooling Venting SDC

Summary

In conclusion, the FW passive function of flood protection is considered to be highly reliable and to be a candidate for categorization as low safety significant.

4.1.3.7 Summary of Feedwater Safety Significance Evaluation

Each of the Feedwater functions have been evaluated to determine their safety significance consistent with the NEI Option 2 Implementation Guidelines, NEI 00-04.

Table 4.1.3-2 summarizes the results of the safety significance determination using the following three different aspects affecting the system's safety significance:

- PRA importance measures
- Degree of complication due to an induced initiating event
- Defense-in-depth

As can be seen, the functions that are considered safety significant are the containment isolation function of the Feedwater injection valves and the RPV makeup function. Each of the other functions is determined to be a candidate for categorization as low safety significant.

Table 4.1.3-1
FEEDWATER IMPORTANCE MEASURES FOR
HIGH PRESSURE RPV INJECTION[1]

Level	Description	CDF		LERF	
		FV	RAW	FV	RAW
Component	FAILURE OF LUBE OIL PRESSURE SWITCH 1-3241-57B	1.47E-04	1.59	4.08E-05	1.16
Component	FAILURE OF PS 1-3441-33 CAUSES LOW SUCT-PRESS TRIP OF ALL 3 RFPs[2]	5.56E-043.22[]	3.95E-04	2.58	
Component	MISCAL OF LIS (HIGH): FAIL TO TRIP OF ALL 3 RFPs	7.86E-04	1.39	-	-
Component	CLOSURE OF 1B RFP DSCH MO 1-3201-B	5.62E-05	1.56	1.12E-05	1.11
Component	RFP PUMP 1-3201B FAIL TO RUN (LOCAL FAULTS)	3.50E-05	1.56	3.98E-06	1.06
Component	RFP RECIRCULATION VALVE 1-3201B FAILS TO OPEN (LOCAL FAULTS)	1.21E-03	1.61	3.93E-04	1.2
Train	Feedwater Train 1A	0	1.0	0.00	1.0
Train	Feedwater Train 1B	1.4E-03	1.16	0.00	1.2
Train	Feedwater Train 1C	0[3]	1.0	0.00	1.0
System	Feedwater Trains 1A, 1B and 1C	0.03	3.98[4]	8.5E-04	3.13

(1) This accounting of importance does not include initiating event importance impacts.

(2) The calculated importance measures are using the existing PRA model as of a freeze date of 12/98. The change to increase the redundancy of this sensor was performed after the freeze date.

(3) The FW train 1A, 1B and 1C component importances are asymmetrical because of the dependencies associated with the power supplies to each train.

(4) The calculated importance measures are using the existing PRA model as of a freeze date of 12/98. The change to increase the redundancy of this sensor was performed after the freeze date.

Table 4.1.3-2
FEEDWATER RISK INSIGHT RESULTS - INTERNAL EVENTS

Function	Importance[1]				Complicated Initiating Event	Defense-In-Depth
	CDF		LERF			
	FV	RAW	FV	RAW		
Containment Isolation	0.0	196	0.0	272	No	Marginal
RPV Make-up (FW System)	1.4E-03	3.98[2]	0.0	3.13[2]	Yes[3]	Adequate
HPCI, SSMP, RCIC, and RWCU Flow Path to RPV	[1]	[1]	[1]	[1]	See Containment Isolation[1]	[1]
Miscellaneous	0.0	1.0	0.0	1.0	None	Not Required
FW Flow Regulation	0.0	1.0	0.0	1.0	Yes	Adequate
Flood Prevention	0.0	1.0	0.0	1.0	No	Adequate

(1) The flow path to the RPV has been identified in the Containment Isolation discussion as safety significant.
(2) A plant design change for Unit 1 has eliminated the single point failure of the suction pressure switch and has made all individual SSC RAW values less than 2.0.

(3) The feedwater system for the RPV Injection Function has been evaluated according to the NEI Guideline and it is determined that while all the SSCs have importance measures less than the "safety significant" threshold and there is adequate defense-in-depth, the feedwater SSCs are placed in the safety significant category because loss of feedwater is a complicated initiating event (loss of RPV injection function and FV>0.005). Individual components within the feedwater system have not been singled out as the potential cause of loss of feedwater events. This exercise could result in reducing the number of FW SSCs considered to be safety significant. This exercise has not been included in the preparatory work performed for the IDP.

4.2 FIRE ASSESSMENT

The assessment of possible fire implications with regards to the safety significance of SSCs is performed in this section. Quad Cities has recently updated the Fire PRA and it has been reviewed by the NRC and its consultants. The Fire PRA is used to provide risk information regarding the importance of the pilot systems. The approach taken is identical to that used in the internal events safety significance evaluation using the internal events PRA. (See Section 4.1.) It is noted that the internal events evaluation has already treated many of the same issues that need to be dispositioned for postulated fire initiators. The analysis of the fire initiating events using the NEI Guidelines makes use of the Quad Cities fire PRA results. Consistent with the NEI Guideline, the determinations for complicated initiating events and defense-in-depth are performed as part of the internal events evaluation. The conclusions from the internal events PRA generally apply to each of the functions subject to the fire hazard unless specifically noted. Therefore, the following discussion identifies those functions for which exceptions are noted relative to the internal events conclusions. Therefore, advantage will be taken of this information in dispositioning the SSCs in this section.

The insights and results of the Quad Cities Fire PRA [Ref. 16] are collected and presented for the candidate Option 2 SSCs in the following subsections using the NEI Guidelines for fire PRAs.

4.2.1 Core Spray System

The Core Spray functions are re-evaluated considering the fire initiating events and their probabilistic evaluation. The functions are the following:

- RPV Injection
- Spray Distribution (sparger)

- RPV Boundary Protection/Containment (Pressure) Isolation
- Debris Retention
- Flood Prevention
- Keep-Fill
- Containment Flooding

System integrity is treated in two separate functions:

- RPV Boundary Protection/Containment Isolation
- Flooding Prevention/System Integrity

Each of these safety related functions are evaluated using the NEI Guidelines.

All of the functions found to be of low safety significance in the internal events evaluation are also found to be of low safety significance in the fire analysis for similar reasons. Only the exceptions to this conclusion or special circumstances are discussed below.

4.2.1.1 RPV Injection Function

The fire PRA provides a quantitative assessment of the RPV injection function. The fire PRA evaluation was performed using all non-screened fire accident sequences. The truncation of the fire PRA model is 1E-10/yr.

The existing fire PRA has a conservatism imbedded in the quantitative evaluation. This conservatism is related to the deterministic success criteria modeling for spurious ADS operation. The updated fire PRA completed in 1999 uses the large LOCA success criteria to model the spurious ADS. This conservatism affects the CDF calculated for a few fire initiators. The specific fire scenarios which adversely impact LPCI injection and one train of CS along with a spurious ADS initiation include the following:

- FZ060-C
- FZ087-L
- FZ067-N
- FZ088-B
- FZ089-H

This conservative success criteria has recently been reevaluated using the MAAP thermal hydraulic analysis code previously used for PRA success criteria determination for the Quad Cities PRA. Results of these MAAP calculations indicate that the success criteria for the spurious ADS can be expanded to include additional systems as success paths (e.g., SSMP).

Using the MAAP results to justify the addition of SSMP as a success criterion for spurious ADS, the fire PRA results for the six compartments identified above (those involving the spurious ADS initiation) were updated to be consistent with these most recent Quad Cities thermal hydraulic analyses. The calculated fire CDF decreased from 6.6E-05/yr to 6.4E-05/yr, a reduction of 3%. As seen, this revised modeling has only a small impact on the total fire CDF. However, this revised

modeling is required to more accurately determine the CS system importance for fire. With this revised fire model the importance measures were reassessed.

Table 4.2.1-1 summarizes the importance measures for the trains CS A and CS B relative to CDF. Tables 4.2.1-2 and 4.2.1-3 summarize the Fussell-Vesely (FV) importance for the Core Spray components that survived the truncation of the PRA model (1E-10/yr) and Core Spray trains. As can be seen, each individual Core Spray component has a FV less than the NEI guideline of 0.005.

The LERF importance cannot be calculated because a LERF model for the external hazards is not available. The NEI Guidelines specify that where LERF can not be quantitatively linked into the fire model, the insights from the internal events LERF model should be qualitatively coupled with the assessment of fire impacts on containment isolation to develop recommendations to the IDP on LERF contributors. The isolation valves are normally closed valves with two valves in series from different power supplies. Interruption of power or control power would lead to isolation. The one exception is the Reactor Building to wetwell vacuum breakers. This line is protected by a normally closed check valve and an air operated isolation valve. The AOV fails open on loss of control power or air leaving the check valve as the isolation method. It is further noted that this pathway would be a scrubbed release.

- The fire evaluation has not introduced any new failure modes into the containment isolation assessment nor has it increased the LERF associated with failure of containment isolation.

Table 4.2.1-1

SUMMARY OF FIRE PRA IMPORTANCE MEASURES
RELATIVE TO CDF CORE SPRAY TRAIN

System	Revised Model[1] FV[2]	RAW
CS A	2.6E-03	1.3
CS B	4.5E-03	1.5

(1) Base internal fire CDF = 6.6E-05/yr (Unit 1) and 7.3E-05/yr (Unit 2). Revised internal fire CDF = 6.4E-05/yr (Unit 1). Revised model includes SSMP as a successful injection.

(2) The CS train FV has been computed without the maintenance unavailability FV contribution included.

Table 4.2.1-2

CORE SPRAY TRAIN A FIRE PRA IMPORTANCE MEASURES

Basic Event ID	DESCRIPTION	TYPE	F
1CSCV140213A-D--	MIN-FLOW LINE CHECK VALVE 1-1402-13A FAILS TO OPEN	RANDOM	0
1CSCV14028A--D--	CHECK VALVE 1-1402-8A FAILS TO OPEN	RANDOM	0
1CSCV14029A--D--	INJECTION CHECK VALVE 1-1402-9A FAILS TO OPEN	RANDOM	0
1CSFT1-1464-AF--	FLOW TRANSMITTER (FT 1-1464-A) FAILS TO FUNCTION	RANDOM	0.
1CSMV1402-24AV-F	FIRE INDUCED SPURIOUS CLOSURE OF 1A CS PUMP UPSTM VLV MO 1-1402-24A	FIRE	0
1CSMV140225A-D--	MOV 1-1402-25A FAILS TO OPEN DUE TO LOCAL FAULTS	RANDOM	0
1CSMV140238A-D--	MIN-FLOW VALVE MO1-1402-38A FAILS TO OPEN DUE TO LOCAL FAULTS	RANDOM	0
1CSMV1402-3A-V-F	FIRE INDUCED SPURIOUS CLOSURE OF 1A CS PUMP SUCT VLV MO 1-1402-3A	FIRE	0
1CSMV1402-4A-K--	CS LOOP A TEST LINE MOV 1-1402-4A FAILS TO CLOSE	RANDOM	
1CSMV14024A--O--	CS LOOP A TEST LINE MOV 1-1402-4A OPEN FOR TESTING	MAINT	0
1CSMV14024A--U--	CS LOOP A TEST LINE MOV 1-1402-4A FAILS TO REMAIN CLOSED	RANDOM	0
1CSMV1402-4A-U-F	FIRE INDUCED SPURIOUS OPEN OF 1A CS PUMP TEST VLV MO 1-1402-4A	FIRE	0
1CSPM1A1401--A--	CS PUMP 1A-1401 FAILS TO START (LOCAL FAULTS)	RANDOM	0
1CSPM1A1401--X--	CS PUMP 1A-1401 FAILS TO RUN (LOCAL FAULTS)	RANDOM	0
1CSRE102A----F--	FAILURE OF RELAY 1-1430-102A	RANDOM	0
1CSRE111A----F--	FAILURE OF RELAY 1-1430-111A, ESS I ACTUATION	RANDOM	0
1CSRE114A----F--	FAILURE OF RELAY 1-1430-114A	RANDOM	0
1CSRE115A----F--	FAILURE OF RELAY 1-1430-115A	RANDOM	0
1CSRE129A----F--	FAILURE OF RELAY 1-1430-129A	RANDOM	0
1CSRE310-----F--	CS PUMP 1A TIME DELAY START RELAY 1-1430-310-1 FAILS TO FUNCTION	RANDOM	0
1CSRE312-----F--	FAILURE OF RELAY 1-1430-312	RANDOM	0
1CSSWHS308A--U--	FAILURE OF SWITCH 1-1430-308A CONTACT	RANDOM	0.0
1CS--TRAIN-A---F	CORE SPRAY TRAIN A COMPONENTS ON LOGIC DRAWINGS	RANDOM	0
1CS--TRAIN-A-M--	CORE SPRAY TRAIN A UNAVAILABLE DUE TO MAINTENANCE	MAINT	

	TOTAL

Note that these basic events do not address the fire induced “hot shorts” impact. No “hot short” basic events were identified for CS to be significant in the determination of CDF as part of the QUAD CITIES fire analysis.

Table 4.2.1-3

CORE SPRAY TRAIN B FIRE PRA IMPORTANCE MEASURES

Basic Event ID	DESCRIPTION	TYPE
1CSCV140213B-D--	MIN-FLOW LINE CHECK VALVE 1-1402-13B FAILS TO OPEN	RANDOM
1CSCV14028B--D--	CHECK VALVE 1-1402-8B FAILS TO OPEN	RANDOM
1CSCV14029B--D--	INJECTION CHECK VALVE 1-1402-9B FAILS TO OPEN	RANDOM
1CSFT1-1464-BF--	FLOW TRANSMITTER (FT 1-1464-B) FAILS TO FUNCTION	RANDOM
1CSMV1402-24BV-F	FIRE INDUCED SPURIOUS CLOSURE OF 1B CS PUMP UPSTM VLV MO 1-1402-24B	FIRE
1CSMV140225B-D--	MOV 1-1402-25B FAILS TO OPEN DUE TO LOCAL FAULTS	RANDOM
1CSMV140238B-D--	MIN-FLOW VALVE MO1-1402-38B FAILS TO OPEN DUE TO LOCAL FAULTS	RANDOM
1CSMV1402-3B-V-F	FIRE INDUCED SPURIOUS CLOSURE OF 1B CS PUMP SUCT VLV MO 1-1402-3B	FIRE
1CSMV14024B--K--	CS LOOP B TEST LINE MOV 1-1402-4B FAILS TO CLOSE	RANDOM
1CSMV14024B--O--	CS LOOP B TEST LINE MOV 1-1402-4B OPEN FOR TESTING	MAINT
1CSMV14024B--U--	CS LOOP B TEST LINE MOV 1-1402-4B FAILS TO REMAIN CLOSED	RANDOM
1CSMV1402-4B-U-F	FIRE INDUCED SPURIOUS OPEN OF 1B CS PUMP TEST VLV MO 1-1402-4B	FIRE
1CSPM1B1401--A--	CS PUMP 1B-1401 FAILS TO START (LOCAL FAULTS)	RANDOM
1CSPM1B1401--X--	CS PUMP 1B-1401 FAILS TO RUN (LOCAL FAULTS)	RANDOM
1CSRE102B----F--	FAILURE OF RELAY 1-1430-102B	RANDOM
1CSRE107B----F--	FAILURE OF RELAY 1-1430-107B	RANDOM
1CSRE111B----F--	FAILURE OF RELAY 1-1430-111B, ESS II ACTUATION	RANDOM
1CSRE114B----F--	FAILURE OF RELAY 1-1430-114B	RANDOM
1CSRE115B----F--	FAILURE OF RELAY 1-1430-115B	RANDOM

Table 4.2.1-3
CORE SPRAY TRAIN B FIRE PRA IMPORTANCE MEASURES (CONTINUED)

Basic Event ID	DESCRIPTION	TYPE
1CSSWHS308B--U--	FAILURE OF SWITCH 1-1430-308B CONTACT	RANDOM
1CS--TRAIN-B---F	CORE SPRAY TRAIN B COMPONENTS ON LOGIC DRAWINGS	RANDOM
1CS--TRAIN-B-M--	CORE SPRAY TRAIN B UNAVAILABLE DUE TO MAINTAINANCE	MAINT
	TOTAL	

4.2.1.2 Containment Isolation

The containment isolation function is determined to be safety significant based on the internal events PRA. This is sufficient to consider it safety significant.

It is noted that the fire PRA has not identified comparable scenarios that would be induced by a fire and would lead to the safety significance finding.

4.2.1.3 Summary of Core Spray Safety Significance Due to Fire Events

As in the internal events PRA, one of the primary Core Spray functions modeled in the Fire PRA is RPV injection. Table 4.2.1-1 lists the Core Spray train A and B importance measures for RPV injection from the fire PRA.

The other functions of Core Spray are evaluated in Section 4.1. The conclusions from those evaluations also apply to the assessment of fire induced risk for these functions, therefore, those discussions are not repeated here. Table 4.2.1-4 summarizes the Core Spray functions and the conclusions relative to safety significance.

4.2.2 Standby Gas Treatment System

The SBGTS characterization in terms of safety significance using the surrogate risk measures of CDF and LERF from the internal events PRA is provided in Section 4.1.2. The results are that SBGTS is of low safety significance.

The safety significance of SBGTS is unaffected by consideration of fire initiating events. The rationale for the SBGTS safety significance determination due to fire events is identical to that discussed for internal events.

Therefore, SBGTS can be considered of low safety significance for the fire events evaluation.

Table 4.2.1-4
CORE SPRAY RISK INSIGHT RESULTS – FIRE EVENTS

Function	Importance CDF	
	FV	RAW
RPV Injection CS A	2.6E-03	1.3
RPV Injection CS B	4.5E-03	1.5
Spray Distribution	0.0	1.0
Containment Isolation	(1)	(1)
Debris Retention	0.0	1.0
Flood Prevention	(2)	(3)
Keep-Fill	0.0	1.0
Containment Flooding	0.0	1.0

Notes

(1) Not Estimated; function is safety significant due to RAW from internal events. Fire PRA does not identify any risk significant sequences.

(2) Importance measures were not calculated because the accident sequences were found to be so low as to be truncated from the PRA.

(3) RAW calculations for pipe breaks are not considered appropriate and these importance measures have not been calculated. (Note, these SSCs have been truncated from the PRA model for Quad Cities internal flood.)

4.2.3 Feedwater System

As in the internal events PRA, one of the primary FW functions modeled in the Fire PRA is high pressure RPV injection. Table 4.2-3-1 below lists the FW RPV injection importance measures from the fire PRA. All the individual component RAW importances are less than 2.0. FW for RPV injection is considered as having low safety significance in the fire PRA based solely on the calculated importance measures. This low safety significance result can be understood because the fires that are identified as contributing most to the calculated fire induced CDF result in accident sequences that either:

(1) Also fail feedwater

OR

(2) Are due to functional failures (heat removal) that are not mitigated by feedwater

Therefore, the importance of feedwater in the successful mitigation of fire induced scenarios is found to be low based on the quantified fire PRA model.

Table 4.2.3-1
FEEDWATER SYSTEM IMPORTANCE MEASURES FOR RPV INJECTION FROM THE QUAD CITIES FIRE PRA

Description	CDF	
	FV	RAW
CV 1-3208A FAILS TO CLOSE	7.8E-07	1.0
CV 1-3208B FAILS TO CLOSE	7.8E-07	1.0
CV 1-3208C FAILS TO CLOSE	7.8E-07	1.0
CV 1-220-58A FAILS TO OPEN	7.3E-06	1.04
CV 220-59B FAILS TO CLOSE	2.2E-06	1.0
CV 1-220-62A FAILS TO OPEN	7.3E-06	1.04
FAILURE OF LIS 263-59A	1.1E-06	1.0
FAILURE OF PS 1-3441-33 CAUSES LOW-SUCT-PRESS TRIP OF ALL 3 RFPs	2.4E-06	1.01

4.3 SEISMIC ASSESSMENT

In this section, the insights and results of the seismic safety significance assessment are collected and presented for the candidate Option 2 SSCs. Quad Cities does not have a seismic PRA. The Quad Cities seismic evaluation process for response to GL 88-20 relied on a seismic margins study consistent with the SQUG effort. [Ref. 15]

The seismic margins methodology is a screening approach for evaluating seismic hazards. It does not generate core damage frequency values; rather, it assists in identifying potential seismic susceptibilities and vulnerabilities. In the NEI Categorization process, the seismic margins analysis is reviewed to determine if the component is credited as part of the safe shutdown paths evaluated. If a component is credited, it is considered safety significant. This is conservative because the seismic margin process does not generate core damage frequency values. However, the option always exists for the licensee to perform a seismic PRA to remove any conservatisms.

If the component does not participate in the safe shutdown path, then it is considered a candidate for low safety significance with respect to seismic risk.

The conclusions from the internal events PRA risk assessment generally apply to each of the functions subject to the seismic hazard unless specifically noted. Therefore, the following discussion identifies those functions for which exceptions are noted relative to the internal events conclusions.

Table 4.3-1 derived from Section 3.2.1 of the Quad Cities IPEEE Report [Ref. 15] identifies the seismic safe shutdown path. The Seismic Qualification Utility Group (SQUG) Safe Shutdown Equipment List (SSEL)/Seismic Individual Plant Examination for External Events (IPEEE) Success Path Equipment List (SPEL) is used.

Table 4.3-1
SEISMIC SAFE SHUTDOWN PATH

Safe Shutdown Function	Primary Shutdown Path	Backup Shutdown Path
Reactor Reactivity Control	• Reactor Protection System • Control Rod Drive System	N/A
Reactor Coolant Pressure Control	• Automatic Depressurization Valves (B, C)	• Automatic Depressurization Valves (E, D)
Decay Heat Removal	• Residual Heat Removal RHR Loop A • RHR Service Water RHRSW Loop A	• RHR Loop B • RHRSW Loop B
Reactor Coolant Inventory Control	• High Pressure Coolant Injection (HPCI) • RHR Loop A	• RHR Loop B

4.3.1 Core Spray System

The Core Spray system is not identified as participating in the deterministic seismic safe shutdown path. Therefore, the SBGTS is a candidate for treatment as low safety significant. Quad Cities seismic analysis as required for safe shutdown. Because the Core Spray system is not credited in the seismic analysis, therefore, consistent with the NEI Guidelines it is assigned a low safety significance for seismic scenarios consistent with the NEI Guidelines.

The seismic evaluation assumes that the RPV pressure boundary and the Core Spray boundary outside containment are adequate for seismic events. Therefore, the seismic hazard impact on the Core Spray system functions associated with RPV pressure boundary integrity and flood prevention are not explicitly assessed in the categorization process. They have been assigned to a low safety

significant category for the seismic hazard based on a recognition that pipe runs generally have substantial seismic capability above that for equipment.

4.3.2 Standby Gas Treatment System

The Standby Gas Treatment system is not identified as participating in the deterministic seismic safe shutdown path. Therefore, the SBGTS is a candidate for treatment as low safety significant.

4.3.3 Feedwater System

The Feedwater System is not identified in the seismic analysis as required for safe shutdown. As such, the FW system is assigned a low safety significance for seismic scenarios, consistent with the NEI Guidelines. Because the seismic event is already postulated to fail offsite power, Feedwater would not be available and therefore does not further complicate the accident response.

The seismic evaluation assumes that the RPV pressure boundary and the Feedwater boundary outside containment are adequate for seismic events. Therefore, the seismic hazard impact on the Feedwater system functions associated with RPV pressure boundary integrity and flood prevention are not explicitly assessed in the categorization process. They have been assigned to a low safety significant category for the seismic hazard based on a recognition that pipe runs generally have substantial seismic capability above that for equipment.

4.4 OTHER EXTERNAL HAZARD ASSESSMENT

In this section, the insights and results of the other external hazard risk assessments are collected and presented for the candidate Option 2 SSCs. These other external risk assessments include external flood, high winds, transportation, nearby facility accidents as well as other site specific hazards. Quad Cities does not have an external hazards PRA for the "other" events. Therefore, reliance is placed on the NEI Guideline alternative process.

The external events considered in this section include all of those germane to Quad Cities, except for fire and seismic events, which are covered in other sections of this document. While numerous potential external events have been cited in industry literature (such as NUREG/CR-2300), the primary focus in this assessment is on high winds, external floods, transportation accidents and accidents at nearby facilities. The methodology for assessing these events differs from those established for other aspects of the overall IPE/IPEEE Program efforts in keeping with the general perception of the low potential risk contribution of these events.

Supplement 4 of Generic Letter 88-20 [Ref. 17] and the related NUREG-1407 [Ref. 18] request specific evaluations be performed based on a progressive screening approach.

External events characterized as "high winds, floods and other external events" in NUREG-1407 have been evaluated in the Quad Cities IPEEE using the guidance in NUREG-1407. Those evaluations have been made on the basis of the UFSAR, the NRC's SER for Quad Cities, and bounding analyses. The IPEEE submittal [Ref. 23] demonstrated that the plant has been specifically designed to withstand the postulated external events through recourse to bounding analyses and assessments, and by demonstrating extensive margins built into the plant initially.

The alternative process in NEI 00-04 allows the disposition of SSCs that do not participate in the safe shutdown path to be eliminated from further consideration. While a specific safe shutdown path is not defined for each of the "other" external events, it is judged appropriate to use the seismic

safe shutdown path as a surrogate for the "other" external events. (It is also noted that the IPEEE evaluation process has determined for Quad Cities that the CDF associated with these events using bounding analyses is less than 1E-06/yr., i.e., a small risk contribution.)

The deterministic alternative to a PRA evaluation of the "other" external events from NEI 00-04 is to develop the following:

1. *Identify a safe shutdown path for each external event challenge (presumably the same as the seismic safe shutdown path).*
2. *The NEI 00-04 screening approach is then to:*
   a) *Review the SRP on the NUREG 1407 analysis to determine if the SSC is credited as part of the identified safe shutdown path.*

      If a component is credited, it is considered safety significant.
   b) *Ensure that the SSC is not relied upon to support or protect any of the SSCs supporting safe shutdown functions given the challenges to the SSC resulting from the "other" external events. If a component is credited to be available under these conditions, it is considered safety significant, as are the SSCs which assure the functionality of those safety significant SSCs.*

If the SSC passes these screens, then it can be identified as low safety significant.

The result of the identification of a safe shutdown path allows the SSCs to be dispositioned in the same manner as for the seismic assessment – see Section 4.3. The conclusions from the internal events PRA risk assessment generally apply to each of the functions subject to the "other" external hazards. Therefore, the following discussion identifies those functions for which exceptions are noted relative to the internal events conclusions.

4.4.1 Core Spray System

The progressive screening approaches identified by the NRC as acceptable means to disposition external hazards have resulted in screening out the "other" external hazards as being of low safety significance. Naturally, all structures included in the analysis to demonstrate successful screening, such as the Reactor Building, tornado missile shields, flood doors, and flood protective devices, are to be considered safety significant. The Core Spray System and its interactions associated with prevention and mitigation are generally considered sufficiently similar to the internal events evaluation to not warrant further analysis.

No explicit challenge to the RPV integrity function or the flood prevention function is judged to arise from the "other" external events. Therefore, these functions are also assigned low safety significance for this hazard evaluation.

The defense-in-depth for RPV injection is maintained by the availability of multiple safety related systems (e.g., HPCI, LPCI).

The Core Spray SSCs are not relied upon in the "other" external events evaluation to achieve safe shutdown. Therefore, the Core Spray system is assigned a low safety significance for "other" external hazard scenarios, consistent with the NEI Guideline.

4.4.2 Standby Gas Treatment System

As in the internal events analysis (see Section 4.1), SBGTS is not safety significant for "other" external hazards because it does not prevent core damage and does not provide a viable means to mitigate radionuclide releases below the LERF threshold.

SBGTS SSCs are not relied upon in the "other" external events evaluation to achieve safe shutdown. Therefore, SBGTS is found to have low safety significance for "other" external hazard scenarios, consistent with the NEI Guideline.

4.4.3 Feedwater System

The progressive screening approaches identified by the NRC as acceptable means to disposition external hazards have resulted in screening out the Feedwater system from further consideration of "other" external hazards as safety significant. Naturally, all structures included in the analysis to demonstrate the screening such as the Reactor Building, tornado missile shields, flood doors, and flood protective devices are to be considered safety significant. The systems (such as Feedwater) and their interactions associated with prevention and mitigation are generally considered sufficiently similar to the risk implications as evaluated in the internal events PRA. Feedwater is found in the internal events evaluation to be safety significant for containment isolation and for RPV makeup. The external events can, in many cases, result in the loss of offsite power (e.g., high winds, tornadoes, external floods). The loss of offsite power will defeat Feedwater success and mask the importance of Feedwater. Therefore, additional quantitative evaluations are not considered necessary or warranted.

No explicit challenge to the RPV integrity function or the flood prevention function is judged to arise from the "other" external events. Therefore, these functions are also assigned low safety significance for this hazard evaluation.

The defense in-depth for RPV injection is maintained by the availability of multiple safety related systems (e.g., HPCI, LPCI).

FW SSCs are not relied upon in the "other" external events evaluation to achieve safe shutdown. Therefore, the FW system is found to have low safety significance for the "other" external hazard scenarios, consistent with the NEI Guideline.

4.5 SHUTDOWN ASSESSMENT

The systems being evaluated also have potential uses during shutdown conditions. Therefore, the safety significance under shutdown conditions is also investigated. The shutdown safety significance can be evaluated using either of the following:

- A shutdown PRA (Probabilistic Shutdown Safety Assessment - PSSA)
- Deterministic assessment

As noted in Section 3, a Quad Cities Probabilistic Shutdown Safety Assessment (PSSA) model is available and it has been used to confirm the deterministic Outage Risk Management Guidelines. The PSSA model evaluates the multiple plant states associated with various shutdown configurations and calculates a configuration specific core damage frequency. An integrated calculation of the cutset contributors for all states that allows an importance calculation relative to the annualized CDF does not exist. The importance at each of the 12 – 57 plant shutdown states (depending upon the outage) evaluated could be calculated; however, this would be a tedious calculational effort and outside the scope of this pilot evaluation. In addition, the PSSA model is not verified by Exelon and therefore has not been used in this Option 2 evaluation process.

As a result, the shutdown mode of operation is evaluated deterministically in this Option 2 pilot process consistent with the NEI Guideline by using the Outage Risk Management Guidelines. The NEI Guideline specify the following deterministic evaluation process to identify the safety significance under the shutdown conditions.

In this process, a component can be identified as safety significant for shutdown conditions for one of two reasons:

1. *It could initiate a shutdown event (e.g., loss of shutdown cooling, drain down, etc.)*

   <u>OR</u>

2. *It satisfies both of the following conditions:*

It participates in a safety function whose failure can result in increasing CDF or LERF, and

The minimum requirements[1] *cannot be met for the safety function without the system, structure*, or component.

If the component does not participate in either of these manners, then it is considered a candidate as low safety significance with respect to shutdown safety.

Figure 4.5-1 is a simple flow chart reflecting the criteria from NEI 00-04. The remaining subsections of 4.5 address the shutdown risk implications for the pilot SSC evaluation. The conclusions from the internal events PRA generally apply to each of the functions investigated for the shutdown mode of operation. Therefore, the following discussion identifies those functions for which exceptions are noted relative to the internal events conclusions.

(1) Each outage may be uniquely planned. However, the configuration control in place will maintain adequate safety and defense-in-depth. The Outage Risk Management Guidelines categorize the level of safety and specify the minimum acceptable number of system for each safety function (e.g., sometimes referred to as the ORANGE condition).

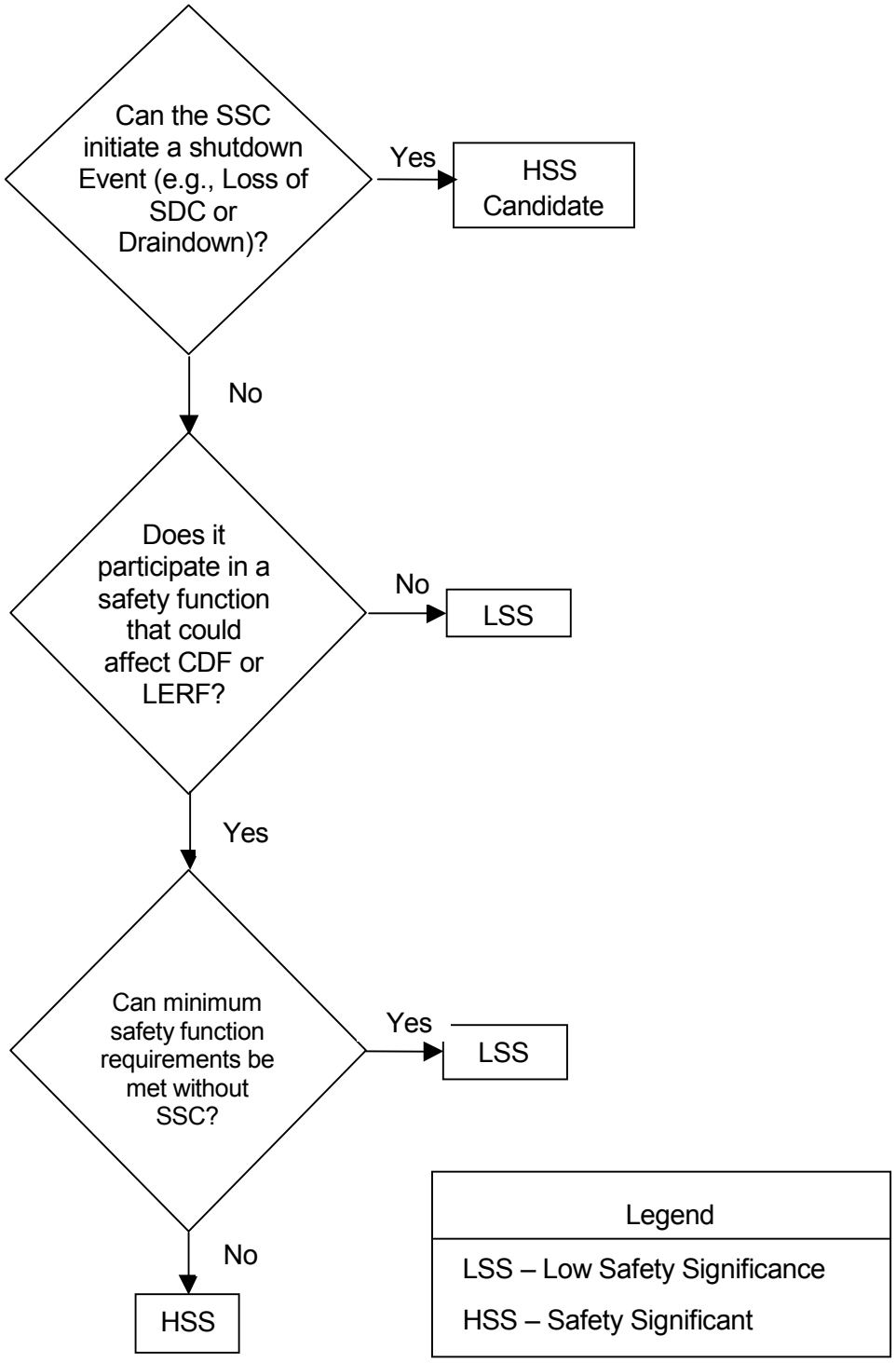
Can the SSC initiate a shutdown Event (e.g., Loss of SDC or Draindown)?
Yes
HSS Candidate
No
Does it participate in a safety function that could affect CDF or LERF?
No
LSS
Yes
Can minimum safety function requirements be met without SSC?
Yes
LSS
No
HSS
Legend
LSS – Low Safety Significance
HSS – Safety Significant

Figure 4.5-1. Safety Significance Determination for Shutdown Safety Assessment

4.5.1 Core Spray System

The Core Spray System is investigated from the standpoint of the functions identified in Appendix A and discussed in Section 4.1:

- RPV injection
- Spray pattern
- Containment Isolation/RPV Boundary Integrity
- Debris Retention
- Flood Prevention
- Keep-Fill
- Containment Flooding

4.5.1.1 Core Spray RPV Injection

The flowchart in Figure 4.5-1 from the NEI Guidelines can be implemented for the Core Spray RPV injection functions as follows:

<u>Initiator</u>

The RPV injection function of Core Spray is found not to be a contributor to a shutdown initiating event such as the loss of shutdown cooling or a draindown except as discussed under the isolation function under Core Spray injection valves.

Deterministic Risk Assessment

The RPV injection function of Core Spray is found to participate in the RPV makeup function and this function may in turn affect the CDF and LERF estimates under shutdown conditions. Therefore, additional investigation must occur to ascertain the safety significance.

The Quad Cities Outage Management Guidelines (OMG-7) and the implementation in ORAM/Sentinel are investigated to assess the minimum requirements for RPV injection. The RPV Injection safety function part of the Outage Management Guidelines cite the following systems as possible to satisfy the safety function (the number of pumps potentially available are identified in parentheses):

- Feedwater (3)
- Condensate (4)
- CRD and SLC (4)
- ECCS Pumps
  - LPCI (4)
  - Core Spray (2)
- Condensate Transfer (2)
- SSMP (1)
- Fire Pump (2)

- The minimum requirements (ORANGE Color) for the RPV injection safety function are determined directly from the outage management tool -- ORAM/Sentinel.
- The minimum requirements vary depending on the mode, the potential for an activity that could impact RPV inventory, and the RPV water level (e.g., at the flange or flooded up).
- The minimum requirements vary from 0 to 3 pumps depending on the plant condition.
- If in this "minimum required" configuration (ORANGE) additional compensatory measures are to be instituted and the time in the ORANGE state is to be minimized.
- In this assessment, it is important to note that Core Spray remains a viable system. Option 2 changes do not remove Core Spray from the plant. In fact, for the shutdown outage management both safety related (LPCI/CS) and non-safety related (FW/condensate, CRD, condensate transfer, SSMP/ are all treated to satisfy the RPV injection function depending on the plant mode.
- The minimum requirements for the RPV injection function can be met without Core Spray. Therefore, the Core Spray RPV injection function can be considered of low safety significance.

Defense-in-Depth

- RPV Injection is a "backup" function during shutdown operation. Shutdown cooling provides an effective means to both remove decay heat and control inventory when there is no LOCA or draindown event. The Outage Management Guideline process under outage conditions provides defense-in-depth via the following:
- Identification of the specific systems that satisfy the function
- Identification of the "minimum" systems available condition (non-ORANGE condition)
- Direction to avoid the minimum system available condition
- Use of compensatory actions when the minimum system available condition is present

Summary

The Core Spray system is considered as a high volume injection source for inventory make-up. However, given the relatively large number of redundant systems for inventory make-up and the time typically available for recovery from initiating events, Core Spray is a low safety significant system for shutdown accident scenarios - analogous to the at-power situation.

Using the NEI 00-04 Guideline, the Core Spray system is found to be of low safety significance.

4.5.1.2 Spray Distribution

The Core Spray System can produce a spray pattern above the core; however, this spray pattern is not relied upon as a safety related function during shutdown.

Initiator

The spray function of Core Spray is found not to be a contributor to a shutdown initiating event such as the loss of shutdown cooling or a drain down (see also the discussion under Core Spray injection valve).

Deterministic Risk Assessment

The spray function of Core Spray is not a function that affects the CDF and LERF estimates under shutdown conditions.

Therefore, the spray function can be considered of low safety significance.

Summary

The Quad Cities PSSA work and the RMGs do not specify the sparger as required to fulfill any required shutdown function. Therefore, the CS sparger is assessed as low safety significance under shutdown outage conditions. This is a similar conclusion to the at-power result.

4.5.1.3 Containment Isolation/RPV Boundary Integrity

Core Spray injection lines inside containment provide a part of the RPV boundary. These lines are relied upon to maintain the RPV boundary integrity. The CS injection valves provide a boundary between the high pressure RPV and the Core Spray System.

Initiator

Opening the CS injection valves without the CS pumps operating could lead to back flow from the RPV to the torus. Because each line contains both a check valve and an MOV, the probability of both being opened without CS pump operation during shutdown is considered to be low. This low likelihood scenario would result in draining the RPV down to the CS spargers, i.e., below normal RPV water level but above TAF. The pressure isolation function of Core Spray is found to be a potential low frequency contributor to a shutdown initiating event, RPV draindown. Similarly, the failure of the CS injection lines would also lead to a draindown.

Summary

Therefore, the Core Spray isolation function, the Core Spray isolation valves, and Core Spray injection lines inside the isolation valves can be considered safety significant. Other Core Spray functions are found to be candidates to be categorized as low safety significant.

4.5.1.4 Debris Retention

Initiator

The debris retention function of Core Spray or its failure is found not to be a contributor to a shutdown initiating event such as the loss of shutdown cooling or a draindown (see also the discussion under Core Spray injection valves).

Deterministic Risk Assessment

The debris retention function of Core Spray is found not to participate in determining CDF. This function may affect the LERF estimates under shutdown conditions. However, debris retention is not a function monitored for shutdown safety consideration.

Because the debris retention function is similar to the RPV injection function, it is useful to recognize the multiple systems available to fulfill the RPV injection (and debris retention) function. The minimum requirements for the RPV injection function can be met without Core Spray.

Summary

Therefore, the Core Spray debris retention function can be considered of low safety significance.

4.5.1.5 Flood Prevention

Initiator

The failure of the flood prevention function of Core Spray is found not to be a contributor to a shutdown initiating event, RPV draindown, because of the Core Spray injection valves high reliability. (See the functions of RPV Boundary Integrity.)

Deterministic Risk Assessment

The failure of the flood prevention function of Core Spray may affect the CDF and LERF estimates under shutdown conditions, however, the estimated frequency is so low that it is truncated from the PSSA and the at-power PRA.

There is no Outage Management Guideline for Core Spray system integrity. This passive feature of the system is of high reliability and does not need to be explicitly included.

Summary

Therefore, the Core Spray flood prevention function is found to be of low safety significance consistent with the NEI Guideline for assessing shutdown conditions.

4.5.1.6 Keep-Fill

Initiator

The Core Spray keep-fill function or its failure is found not to be a contributor to a shutdown event such as the loss of shutdown cooling or a draindown.

Deterministic Risk Assessment

The keep-fill function of Core Spray under accident conditions may affect the CDF and LERF estimates under shutdown conditions; however, the estimated frequency is so low that it can be considered below the level at which models would calculate CDF or LERF. Nevertheless, if this question is answered "yes," then the outage management guidelines are investigated to determine if the minimum requirements for RPV injection (which is the function supported by the keep-fill function) can be met without the keep-fill function. The answer is yes and the function can be considered low safety significant.

Summary

Therefore, the Core Spray keep-fill function can be considered of low safety significance.

4.5.1.7 Containment Flooding

Initiator

The Core Spray containment flooding function or its failure is found not to be a contributor to a shutdown event such as the loss of shutdown cooling or a draindown.

Deterministic Risk Assessment

The containment flooding function of Core Spray is found not to affect the CDF and LERF estimates under shutdown conditions,

Therefore, the Core Spray containment flooding function can be considered of low safety significance.

Summary

Containment Flooding is not a function that is included in the shutdown safety significance assessment. It is screened out as a potential safety significant system.

4.5.2 Standby Gas Treatment System

The Standby Gas Treatment System (SBGTS) functions as described in Appendix A and summarized in Table 3.4-1 include the following:

- Filter effluent during release to environment
- Maintain negative pressure in secondary containment
- Containment Vent

As in the case with internal initiating events, the Standby Gas Treatment System provides minimal mitigation potential under shutdown conditions. This is due to the fact that the standby gas treatment system is not designed for the prevention of large releases following core uncovery and eventual heatup and failure of the fuel during shutdown conditions. The Standby Gas Treatment system is not modeled in the Quad Cities PSSA because following boiling in the RCS with the head removed, SBGTS effectiveness may be adversely affected by the steam generation.

Figure 4.5-1 is used to implement the NEI 00-04 Guideline. The flow chart first questions the possibility of an initiator (draindown or loss of SDC) then it questions whether CDF or LERF would be affected if the system were unavailable.

4.5.2.1 SBGTS for Filtration and Maintenance of Negative Reactor Building Pressure

The assessment of SBGTS under shutdown conditions has many of the same attributes associated with the similar analysis performed for the at-power condition. For example, SBGTS cannot prevent core damage under power or shutdown conditions. SBGTS provides a part of secondary containment. Under shutdown conditions, SBGTS provides a method to maintain a negative pressure inside the Reactor Building. The SBGTS can filter secondary containment atmosphere before release to the environment. It is capable of radionuclide filtration for events such as a fuel assembly drop accident. These accidents are not sufficient to produce a LERF whether SBGTS is operating or not. Therefore, SBGTS can be considered to be of low safety significance.

The role of the standby gas treatment system in shutdown conditions is primarily the mitigation of radionuclide releases following a Design Basis fuel drop accident. In this accident, gap release from the dropped fuel is released into the Reactor Building. However, this release is extremely small when compared with the releases associated with a postulated full core accident involving prolonged loss of cooling and eventual failure of fuel in the core that could cause a LERF. Although the Standby Gas Treatment System does provide some mitigation of the releases associated with the fuel drop accident, this mitigation potential is not considered safety significant as measured by CDF or LERF due to the relatively small radionuclide release and the potential for success of other protective measures (e.g., evacuation of onsite personnel).

<u>Initiator</u>

The functions of filtration and maintenance of a negative Reactor Building pressure function of SBGTS is found not to be a contributor to a shutdown initiating event such as the loss of shutdown cooling or a draindown.

Deterministic Risk Assessment

The types of shutdown accidents that have been identified include the following principal categories:

- A severe accident with substantial core damage and a relatively large source term coupled with substantial steam generation.
- A refueling accident involving dropping a fuel assembly.

These two extremes of the consequence spectrum have the following effects considering SBGTS:

- Steam generation during a severe accident is expected to cause the blow out panels to fail and the large release to bypass the SBGTS making the SBGTS ineffective in preventing a LERF.
- A fuel drop event is expected to have a release sufficiently small based on the UFSAR estimates that the SBGTS mitigation is not required to keep these releases below the definition of a LERF release.

Therefore, these functions do not participate in the determination of CDF or LERF estimates under shutdown conditions.

Summary

Therefore, using the NEI 00-04 Guideline, the SBGTS is found to be a candidate to be categorized as low safety significant for filtering and maintaining a negative Reactor Building pressure under shutdown conditions.

4.5.2.2 SBGTS for Containment Venting

For the majority of refueling outages, the drywell head is removed and containment venting is not a relevant function. Therefore, containment venting is in general not a function that needs to be satisfied. However, for non refuel outages and for certain times during refuel outages containment venting could be specified for some mitigation actions. The safety significance under these narrow range of conditions is similar to that assessed in the at-power evaluation, (i.e., low safety significance). It is noted that there are potential low frequency sequences for which decay heat may be exceedingly low. These are judged to require decay heat levels consistent with a shutdown of more than one month. Under such conditions, the SBGTS 2” diameter vents may be adequate for containment heat removal. However, the time window when this may occur also affords a situation where substantial time >50 hours are available to restore torus cooling or SDC.

Initiator

The Containment Venting function of SBGTS is found not to be a contributor to a shutdown initiating event such as the loss of shutdown cooling or a drain down.

Deterministic Risk Assessment

The Containment Venting function of SBGTS does not participate in the determination of the CDF and LERF estimates under shutdown conditions.

Summary

Therefore, the SBGTS vent function is found to be a candidate for categorization as low safety significant using the NEI 00-04 Guideline.

4.5.3 Feedwater System

The Feedwater system functions are described in Appendix A and summarized in Table 3.4-1. The Feedwater system functions include the following:

- Containment Isolation/RPV Boundary Protection
- RPV makeup by FW
- HPCI, RCIC, SSMP, RWCU flow path to the RPV
- Zinc and H_2 injection flow paths
- High pressure FW heating
- Low pressure FW heating
- FW flow regulation
- Flood prevention

Each of the Feedwater functions is non-safety related except the functions for containment isolation, RPV Boundary Protection, Flood Protection and the HPCI/RCIC flowpath to the RPV.

The following subsections group similar functions together where feasible.

4.5.3.1 Containment Isolation/RPV Boundary Protection

Initiator

The failure of the containment isolation or RPV Boundary Protection function of Feedwater is found to be a potential low frequency contributor to a shutdown initiating event, RPV draindown. This is because the containment isolation function of Feedwater is found to be a low probability contributor to the loss of RPV inventory and a challenge to RPV makeup.

In addition, Feedwater injection lines inside containment provide a part of the RPV boundary. These lines are relied upon to maintain the RPV boundary integrity.

Deterministic Risk Assessment

These functions may affect the CDF and LERF estimates in a very small way under shutdown conditions by inducing a draindown and requiring an RPV makeup response.

The minimum requirements for the containment isolation function require FW integrity and isolation valve operation.

Summary

Therefore, the Feedwater isolation and RPV Boundary protection function can be considered safety significant based on the shutdown evaluation.

4.5.3.2 RPV Make-Up by Feedwater

Initiator

The RPV make-up function of Feedwater is found not to be a contributor to a shutdown initiating event, such as the loss of shutdown cooling or a draindown (see also the discussion under Feedwater Containment Isolation valves).

Deterministic Risk Assessment

The RPV make-up function of Feedwater is found to participate in the RPV makeup function and this function may in turn affect the CDF and LERF estimates under shutdown conditions. However, the minimum requirements for the RPV make-up function under shutdown conditions consistent with NEI 00-04 can be met without Feedwater. Therefore, the Feedwater RPV make-up function is found to be of low safety significance.

The motor driven Feedwater system is modeled in the Quad Cities PSSA as a high volume injection source for inventory make-up. In addition to Feedwater, Core Spray, LPCI, SSMP, CRD and Fire Protection are also modeled. Only one pump train on any of these systems would be sufficient to mitigate LOCA and draindown events. Because of the relatively long time scales associated with shutdown accident scenarios, recovery from initiating events is credited. Given the relatively large number of redundant systems for inventory make-up and the time typically available for recovery from initiating events, Feedwater is low safety significance for shutdown accident scenarios.

Summary

Using the NEI 00-04 Guideline for the assessment of shutdown conditions when no PRA is available, it is found that the FW injection function is of low safety significance.

4.5.3.3 HPCI, RCIC, SSMP, and RWCU Flow Path to the RPV

Initiator

One function of the Feedwater system is to provide a flow path to the RPV for HPCI, RCIC, SSMP, and RWCU. Failure of the RWCU flow path to the RPV is found to be a contributor to a shutdown initiating event under some very narrow sets of conditions associated with very low decay heat levels.

Deterministic Risk Assessment

Loss of shutdown cooling under the conditions where RWCU is providing RPV heat removal can be induced by either pipe failure, flow blockage, or check valves failing. This function may in turn affect the CDF and LERF estimates under shutdown conditions.

Because HPCI and RCIC are not operational at shutdown, the flow paths for these systems are not participants in either initiators, prevention, or mitigation of severe accidents under shutdown conditions

Summary

Therefore, the Feedwater pathway for the RWCU function can be considered safety significant.

4.5.3.4 Zinc and H_2 Injection Flow Paths

Initiator

One function of the Feedwater system is to provide a flow path for Zinc and H_2 injection to the RPV. This function is found not to be a contributor to a shutdown initiating event, such as the loss of shutdown cooling or a drain down.

Deterministic Risk Assessment

This function of Feedwater is found not to affect the CDF and LERF estimates under shutdown conditions.

Summary

Therefore, this function is of low safety significance.

4.5.3.5 High Pressure and Heating

Initiator

The high pressure and low pressure heating function of Feedwater is found not to be a contributor to a shutdown initiating event such as the loss of shutdown cooling or a drain down.

Deterministic Risk Assessment

This function of Feedwater is found not to affect the CDF and LERF estimates under shutdown conditions.

Summary

Therefore, this function is of low safety significance.

4.5.3.6 FW Flow Regulation

Initiator

The flow regulation function of Feedwater is found not to be a contributor to a shutdown initiating event such as the loss of shutdown cooling or a draindown (see also the discussion under Feedwater injection valves).

Deterministic Risk Assessment

The flow regulation function of Feedwater is found to participate in the RPV makeup function and this function may in turn affect the CDF and LERF estimates under shutdown conditions. However, the minimum requirements for the RPV make-up function can be met without Feedwater.

Summary

Therefore the Feedwater flow regulation function is found to be of low safety significance using the NEI 00-04 Guideline for shutdown importance assessment.

4.5.3.7 Flood Prevention

Initiator

The failure of the flood prevention function of Feedwater is found not to be a contributor to a shutdown initiating event, RPV draindown, because of the Feedwater injection valves high reliability. (See the functions of RPV Boundary Integrity.)

Deterministic Risk Assessment

The failure of the flood prevention function of Feedwater may affect the CDF and LERF estimates under shutdown conditions, however, the estimated frequency is so low that it is truncated from the PSSA and the at-power PRA.

There is no Outage Management Guideline for Feedwater system integrity. This passive feature of the system is of high reliability and does not need to be explicitly included.

Summary

Therefore, the Feedwater flood prevention function is found to be of low safety significance consistent with the NEI Guidelines for assessing shutdown conditions.

4.6 SENSITIVITY ANALYSIS

The PRA uses best estimate and realistic assessments of the plant conditions, equipment reliability, system unavailabilities, and operating crew performance. Variations in these parameters can in turn affect the PRA point estimate evaluations of CDF, LERF, and their associated importance measures. Therefore, the prudent approach to PRA inputs is to perform sensitivity evaluations on key inputs to the process to ensure that the best estimate answer is robust given the potential for variations in inputs to the PRA process.

Therefore, the performance of sensitivities using the best estimate model is judged to be an important analysis result to provide to the IDP.

Table 4.6-0 summarizes the sensitivity evaluations performed in accordance with NEI 00-04. These include the examination of:

- Variations in Human Error Probabilities (HEPs)
- Variations in common cause failure (CCF) probabilities
- Variation in maintenance unavailabilities
- Variation in equipment random failure probability

Uncertainty Bounds

The uncertainty distributions on basic events are in general unknown both in terms of the distribution type and the uncertainty bounds. Nevertheless, generic estimates of both uncertainty characterizations have been made for failure modes of typical hardware components[Refs. 26, 27, 28]. These characterizations usually use the log normal distribution to characterize the uncertainty distribution and have used the following error factors to characterize the spread in the distribution (sampling from references is presented only for dominant failure modes):

COMPONENTS	NUCLAAR [27]	ASME Draft # 10 PRA STD [28]	NUREG-1150 [26]
Diesels	EF=5	Beta (.9, 70.2)	EF=3
Pumps			
Motor Driven	EF=5	EF=3	EF=3
Pumps			
FTS	EF=5	EF=10	EF=10
FTR	EF=10	EF=6	EF=10
Turbine Driven	EF=5	EF=3	EF=10
Valves			
AOV	EF=3	EF=3	EF=3
Check	EF=3	--	EF=3
MOV	EF=3	EF=10	EF=10
Hydraulic	EF=3	EF=3	EF=3
SRVs	EF=3	EF=3	EF=3
Manual	EF=3	EF=3	EF=3
Explosive	--	--	EF=3
Electrical			
Battery	EF=5	EF=3	EF=3
Charger	--	EF=3	EF=3
Inverter	EF=5	EF=3	EF=3
Circuit Breaker	EF=10	EF=3	EF=3
Transformer	EF=10	EF=10	EF=10

In addition to component failure rates, another major basic event category input to the PRA is that for human errors. The uncertainty distribution for HEPs is generally considered larger than for hardware failure rates. Each HEP is treated as a log normal distribution with an EF = 10.

Based on this information, the 5th and 95th percentiles of the distributions associated with the specified sensitivities are calculated and input into the PRA models for recalculation.

Sensitivity analyses were performed according to the specified sensitivity cases from the NEI Guidance, NEI 00-04, for the two available quantified PRA models: (1) the internal events PRA; and, (2) the fire events PRA. The sensitivity evaluations performed in this pilot study concentrate on those instances where an SSC or its function is found to be of low safety significance using the best estimate PRA quantitative input and where there may be a concern that the determination would change for different PRA assumptions. For example, the containment isolation boundary and RPV pressure boundary for Core Spray and Feedwater are found to be safety significant in the internal events PRA. Therefore, sensitivity evaluations are not performed to demonstrate this conclusion for various assumptions. It is judged that the base case evaluation is sufficient to support this premise.

Core Spray System Sensitivity Treatment

The Core Spray system is determined to be a candidate low safety significant system for the following functions:

- RPV injection
- Spray distribution
- Debris Retention
- Flood Prevention
- Keep-fill

- Containment Flooding

The spray distribution, flood prevention and keep-fill functions are not explicitly modeled in the Quad Cities PRA because they have been determined to be insignificant risk contributors based on thermal hydraulic calculations or quantitative screening process. The other low safety significant functions are grouped with the RPV injection function of Core Spray in the importance measures calculated by the model. Therefore, performing the sensitivities on of the Core Spray RPV injection functions effectively treats these other two Core Spray functions.

In addition, one Core Spray function has been identified as a candidate for categorization in the safety significant category. This function is the Containment Isolation and RPV boundary integrity. Therefore, this function has not been subject to additional sensitivities because it is judged sufficient to have the safety significance set by the base PRA.

Feedwater System Sensitivity Treatment

The Feedwater System is determined to be a candidate low safety significant system for the following functions:

- Zinc and H_2 flow path
- High and low pressure FW heating
- Flood prevention

These functions are not explicitly modeled in the Quad Cities PRA because they have been determined to be insignificant risk contributors based on the quantitative screening process. Therefore, no sensitivities are performed for these functions.

Four Feedwater System functions are determined to be candidates for categorization as safety significant. These are:

- RPV Make-up
- Containment Isolation/RPV Boundary Integrity
- HPCI/RWCU flow path to the RPV
- FW flow regulation

Selected sensitivities are performed for the RPV make-up function for Feedwater. The determination of the safety significant category for the other functions is considered established by the base PRA.

Sensitivity Case Approach

Sections 4.6.1 through 4.6.6 summarize the sensitivity case results. The following is a brief synopsis of the approach used for the three pilot systems.

Core Spray quantitative sensitivity analysis are performed with the two quantitative PRA models:

- Internal events
- Fire events

The sensitivity analyses identified in Table 4.6-0 were performed for Core Spray at a train and system level. Only selected sensitivities where performed for Feedwater since Feedwater appears as potentially safety significant using the best estimate evaluation.

The SBGTS shows no sensitivity to the parameter changes identified in Table 4.6-0. Therefore, quantitative sensitivity results are not presented.

The Feedwater system is found to be safety significant for its function of RPV injection and containment isolation. Other Feedwater injection functions are not safety significant and they show no sensitivity to the changes identified in Table 4.6-0. Individual feedwater components are not found to be safety significant.

4.6.1 Base Case for Sensitivity Analysis

The base calculations of FV and RAW importances for Core Spray and Feedwater for the RPV injection function are shown in Table 4.6-1 for both fire and internal initiating events. As discussed in Section 4.1, all internal event FV importances for CS and FW in the RPV injection function base case are less than 0.005. The internal event RAW importances are less than 2.0, except for the Feedwater system (all three trains). This indicates that Feedwater system may be a candidate for categorization as safety significant whereas Core Spray components are candidates for categorization as low safety significant for the RPV injection function.

The fire events PRA was evaluated as summarized in Section 4.2. As noted, the fire PRA includes an assessment of the CDF due to fire initiating events for the RPV injection function and these results are also reported in Table 4.6-1. Both Core Spray and Feedwater are found to be candidates for categorization as low safety significant using the Fire PRA model because the system or train importance measures are below the safety significant threshold. There is no Level 2 or LERF model developed for the fire risk contribution. Therefore, the LERF importance measures are not calculated for the fire initiating events.

4.6.2 Sensitivity to HEPs

This section summarizes the sensitivity evaluation results for variations imposed on the Human Error Probabilities (HEPs).

Increased HEPs (Case 1A)

The internal events FV and RAW importances for Core Spray and Feedwater are summarized in Table 4.6-2 for the sensitivity case where all HEPs which are less than 0.1 are increased to 0.1. The Core Spray sensitivity is performed using both the internal event and fire events PRA models. The Feedwater system sensitivity is done for the internal events PRA model. (The fire PRA model shows negligible impact from the feedwater system and therefore sensitivities were considered unwarranted.) None of the resulting FV importances for Core Spray or Feedwater exceed 0.005. The RAW importance for the Feedwater system as a whole exceeds 2.0, which indicates that the Feedwater system is a candidate to be safety significant.

This sensitivity analysis does not change the conclusions of the base case, i.e., Feedwater components may be safety significant but Core Spray components are low safety significance.

Reduced HEPs (Case 1B)

The HEPs are reduced by the recommended values which correspond to reductions of a factor of 26.8 (for an error factor of 10 [Ref. 34]). Table 4.6-3 provides the Core Spray internal events and fire events FV and the RAW results. The sensitivity case for reduced HEP emphasis (Case 1B) indicates that the train-wise importance calculation has a Fussell-Vesely greater than the threshold for safety significance. This is different than the base case for the Fire PRA analysis. Because the F-V threshold applies to individual SSCs, the next step in the process is to calculate whether individual SSCs within the Core Spray train exceed the F-V threshold. The component with largest failure probability and, therefore, the highest F-V in the CS pumps. The fractional contribution from the CS-1B pumps is 0.47. Therefore, the highest SSC F-V for either Core Spray train is 4.0E-3 which is below the 0.005 threshold for an SSC to be considered safety significant. The conclusions remain the same as in the Base Case. Feedwater was not subjected to the sensitivity because it has been identified as a safety significant candidate.

4.6.3 Sensitivity to Common Cause

The common cause hardware failure probabilities are specific basic events that have been found in the past and in the Quad Cities PRA to have a significant influence on the calculated PRA results. It is, therefore, prudent to investigate if the importance measures of SSCs are robust over a range of common cause failure (CCF) assumptions. Two sets of sensitivities are performed to examine the range: (1) Cases where the CCF probabilities are placed at the high end of their probability distribution; (2) Cases where the CCF probabilities are eliminated from the model.

Increased CCF (Case 2A)

Two sensitivities are recommended to address common cause failure impacts. The first sensitivity evaluates the change in importances if the CCF contributors in the model are increased to their 95th percentile values. This is equivalent to multiplying the mean by a factor of 3.73 assuming a log normal distribution and an Error Factor of 10 [Refs. 32, 33]). Table 4.6-4 summarizes the sensitivity case for increased CCF emphasis (Case 2A) and indicates that the train-wise importance calculation has a Fussell-Vesely greater than the threshold for safety significance. This is different than the base case for the fire PRA analysis. Because the F-V threshold applies to individual SSCs, the next step in the process is to calculate whether individual SSCs within the Core Spray train exceed the F-V threshold. The component with largest failure probability and, therefore, the highest F-V is the CS pumps. The fractional contribution from the CS-1B pump is 0.47. Therefore, the highest SSC F-V for either Core Spray train is 2.7E-3 which is below the 0.005 threshold for an SSC to be considered safety significant. Table 4.6-4 shows the Base Case conclusions do not change for Core Spray using the internal events and fire PRA models. Feedwater was not subjected to the sensitivity because it has been identified as a safety significant candidate.

Reduced CCF (Case 2B)

The second CCF case evaluates the change in importance if the CCF contributors in the model are reduced to the 5th percentile values. This case is evaluated here conservatively by setting all CCF basic events to 0.0. Table 4.6-5 summarizes the sensitivity case for decreased emphasis on CCF (Case 2B) and indicates that the train-wise importance calculation has a Fussell-Vesely greater than the threshold for safety significance. This is different than the base case for the fire PRA analysis. Because the F-V threshold applies to individual SSCs, the next step in the process is to calculate whether individual SSCs within the Core Spray train exceed the F-V threshold. The component with largest failure probability and, therefore, the highest F-V is the CS pump. The fractional contribution from the CS-1B pumps is 0.47. Therefore, the highest SSC F-V for either Core Spray train is 3.0E-3 which is below the 0.005 threshold for an SSC to be considered safety significant. Table 4.6-5 shows that the Base Case conclusions do not change for both Core Spray and Feedwater using the internal events PRA model. In addition, the Core Spray sensitivity case is performed with the fire PRA model and again the Base Case conclusions do not change.

4.6.4 Sensitivity to Elimination of Maintenance Unavailability

The maintenance unavailability associated with an SSC has been found to produce dominant cutsets in past PRAs including the Quad Cities PRA. Because the maintenance unavailabilities may mask the importance of individual SSCs, it is judged useful to examine the case where the maintenance unavailabilities are eliminated from the model.

The FV and RAW importances for Core Spray and Feedwater are shown in Table 4.6-6 for the case where maintenance unavailability is eliminated from the internal events PRA. All FV importances are less than 0.005. The RAW importances are less than or equal to 2.0, except for Feedwater (all three trains). This indicates that Feedwater components may be safety significant and that Core Spray components are low safety significant. This confirms the conclusions from the base

internal events PRA. The fire PRA sensitivity case for Core Spray is also included in Table 4.6-6. It also confirms the Base Case conclusions.

4.6.5 Sensitivity to Random Component Failure Probabilities

Random component failure probabilities may show variation that is characteristic of the plant specific design, maintenance, or environment. Varying the random failure probabilities exposes whether the importance results may be sensitive to a uniform plant specific variation (increase or decrease) in the SSC failure probabilities.

Tables 4.6-7 and 4.6-8 provide the sensitivity results if the random component failure probabilities are set to their 95th and 5th values, respectively, for Core Spray in the internal events and fire PRA models. The sensitivity case for increased random failure probabilities (Case 4A) and indicates that the train-wise importance calculation has a Fussell-Vesely greater than the threshold for safety significance. This is different than the base case for the fire PRA analysis. Because the F-V threshold applies to individual SSCs, the next step in the process is to calculate whether individual SSCs within the Core Spray train exceed the F-V threshold. The component with largest failure probability and, therefore, the highest F-V is the CS pump. The fractional contribution from the CS-1B pumps is 0.47. Therefore, the highest SSC F-V for either Core Spray train is 3.2E-3 which is below the 0.005 threshold for an SSC to be considered safety significant. Again, the Base Case results do not change the conclusions for the Core Spray system based on the internal events PRA. Feedwater was not subjected to the sensitivity because it has been identified as a safety significant candidate.

4.6.6 Sensitivity Summary

The recommended sensitivity cases for candidate low safety significant SSCs have been performed with the available Quad Cities PRA models. The results indicate the following:

- Core Spray: The Core Spray RPV injection function which also incorporates the risk profile impacts of the functions: debris retention and containment flooding has been subject to the recommended sensitivity cases from NEI 00-04. The base case internal events and fire events PRA models found these functions to be candidates for categorization as low safety significant. No sensitivity cases resulted in the CDF or LERF risk measures calculated for individual SSCs to exceed their Fussell-Vesely or RAW criteria for the RPV injection function. It is concluded that the internal events PRA conclusions regarding the low safety significance of Core Spray are robust and are valid over a very broad range of variations in plant performance.

- SBGTS: The SBGTS conclusions are not subject to sensitivity variations because the system does not influence either surrogate risk measure, i.e., CDF or LERF. Therefore, the SBGTS conclusions remain valid without additional sensitivities..

- Feedwater: The Feedwater system is determined to be a candidate safety significant system for two functions:

  – RPV injection

  – Containment Isolation

In addition, these FW system functions contribute to complicated initiating events. Therefore, the two Feedwater functions are classified as candidates for categorization as safety significant. A subset of sensitivity cases were performed and they confirmed that the Feedwater system function of RPV injection remains safety significant based on the calculated RAW for the system (not for individual trains within the system).

The other functions for Core Spray, SBGTS, and feedwater did not have an identified need to perform sensitivity analysis to confirm the conclusions of their safety significance.

Table 4.6-0
SUMMARY OF SENSITIVITY CASES IDENTIFIED BY NEI 00-04

Case	Sensitivity Description	Implementation in the Quad Cities Model
1A	Increase all human error basic events to their 95th percentile value.	Instead of increasing by a factor of 3.73 corresponding to the 95th percentile for HEPs with a log normal distribution and error factor of 10, the HEPs were increased to 0.1. This resulted in strong HEP emphasis.
1B	Decrease all human error basic events to their 5th percentile value.	Decreased all HEPs by a factor of 26.8; equivalent to an Error Factor of 10.
2A	Increase all component common cause events to their 95th percentile value.	Increased all CCF events by a factor of 3.73; equivalent to an Error Factor of 10.
2B	Decrease all component common cause events to their 5th percentile value.	Set all CCF to zero; this results in eliminating CCF.
3	Set all maintenance unavailability terms to 0.0.	Set all maintenance unavailability terms to 0.0.
4A	Increase all component random failure events to their 95th percentile value.	Increased all hardware basic events by a factor of 2.4 corresponding to a log normal distribution with an error factor of 3 except Initiators, HEPs, maintenance unavailabilities.
4B	Decrease all component random failure events to their 5th percentile value.	Decrease all B.E. by a factor of 3.75 except Initiators, HEPs, maintenance unavailabilities.

Table 4.6-1

OPTION 2 BASE CASE IMPORTANCE MEASURES FOR RPV INJECTION FUNCTION

Train/ Systems	Internal Events				Internal Fire			
	CDF[1]		LERF[2]		CDF[3]		LERF[4]	
	FV	RAW	FV	RAW	FV	RAW	FV	RAW
CS Train 1A	1.70E-05	1.03	0.00	1.03	2.6E-03	1.3	n/a	n/a
CS Train 1B	1.70E-05	1.03	0.00	1.03	4.5E-03	1.5	n/a	n/a
CS System	3.30E-05	1.12	0.00	1.13	6.1E-3	2.1	n/a	n/a
FW Train 1A	0.00	1.00	0.00	1.00	0.00	1.00	n/a	n/a
FW Train 1B	1.40E-03	1.61	0.00	1.2	0.00	1.00	n/a	n/a
FW Train 1C	0.00	1.00	0.00	1.00	0.00	1.00	n/a	n/a
FW System	1.40E-03[5]	3.98	0.00[5]	3.13	0.00	1.00	n/a	n/a

Notes:

(1) Base internal events CDF = 4.6E-06/yr (Units 1 and 2).

(2) Base internal events LERF = 3.3E-06/yr (Units 1 and 2).

(3) Base internal fire CDF = 6.4E-05/yr (Unit 1) as modified for success criteria defined in Section 4.2.

(4) No base internal fire LERF model available.

(5) The Fussell-Vesely (FV) importance measure for the feedwater system does not include the initiating event FV for loss of feedwater which is 0.03. This is treated separately in the NEI Guideline evaluation process.

Table 4.6-2
OPTION 2 SENSITIVITY CASE 1A IMPORTANCE MEASURES FOR RPV INJECTION FUNCTION (INCREASED HEP EMPHASIS)[5], [6]

Train/Systems	Internal Events				Internal Fire [4]	
	CDF[1]		LERF[2]		CDF[3]	
	FV	RAW	FV	RAW	FV	RAW
CS Train 1A	1.60E-06	1.00	0.00	1.00	9.9E-4	1.1
CS Train 1B	1.60E-06	1.00	0.00	1.00	3.5E-3	1.3
CS System	3.20E-06	1.02	0.00	1.02	4.5E-3	1.4
FW Train 1A	0.00	1.00	0.00	1.00	n/a	n/a
FW Train 1B	6.60E-05	1.04	1.15E-05	1.02	n/a	n/a
FW Train 1C	0.00	1.00	0.00	1.00	n/a	n/a
FW System	6.60E-05	6.36	1.15E-05	5.78	n/a	n/a

Notes:

[1] Sensitivity Case 1A internal events CDF = 1.1E-04/yr (Units 1 and 2).

[2] Sensitivity Case 1A internal events LERF = 9.49E-05/yr (Units 1 and 2).

[3] Sensitivity Case 1A internal fire CDF = 3.7E-4/yr (Unit 1).

[4] No internal fire LERF model available.

[5] HEPs revised to a maximum of 1.0 if base>0.1, or 0.1 of base HEP<0.1

[6] Offsite AC power non-recoveries not modified.

Table 4.6-3
OPTION 2 SENSITIVITY CASE 1B IMPORTANCE
MEASURES FOR RPV INJECTION FUNCTION (DECREASED HEPs EMPHASIS)[6]

Train/Systems	Internal Events				Internal Fire[4]	
	CDF[1]		LERF[2]		CDF[3]	
	FV	RAW	FV	RAW	FV	RAW
CS Train 1A	1.05E-05	1.00	0.00	1.00	6.8E-3[7]	1.6
CS Train 1B	1.05E-05	1.00	0.00	1.00	8.6E-3[7]	1.7
CS System	2.10E-05	1.16	0.00	1.16	1.5E-2	2.6
FW Train 1A	[5]	[5]	[5]	[5]	n/a	n/a
FW Train 1B	[5]	[5]	[5]	[5]	n/a	n/a
FW Train 1C	[5]	[5]	[5]	[5]	n/a	n/a
FW System	[5]	[5]	[5]	[5]	n/a	n/a

Notes:

[1] Sensitivity Case 1B internal events CDF = 2.29E-06/yr (Units 1 and 2).

[2] Sensitivity Case 1B internal events LERF = 1.35E-06/yr (Units 1 and 2).

[3] Sensitivity Case 1B internal fire CDF = 3.4E-5/yr (Unit 1).

[4] Sensitivity Case 1B internal fire LERF does not have a model available to support quantification.

[5] Feedwater is assessed as of high safety significance for the base case. Additional Feedwater importance not calculated for Sensitivity Case 1B.

[6] Offsite AC power non-recoveries not modified.

[7] Individual SSCs within the CS train 1B are <u>all</u> found to be less than the 0.005 threshold value for safety significance.

Table 4.6-4
OPTION 2 SENSITIVITY CASE 2A IMPORTANCE
MEASURES FOR RPV INJECTION FUNCTION
(INCREASED EMPHASIS ON COMMON CAUSE FAILURE)

Train/Systems	Internal Events				Internal Fire[4]	
	CDF[1]		LERF[2]		CDF[3]	
	FV	RAW	FV	RAW	FV	RAW
CS Train 1A	1.30E-05	1.00	3.18E-06	1.00	3.5E-3	1.3
CS Train 1B	1.30E-05	1.00	3.18E-06	1.00	5.8E-3[6]	1.5
CS System	2.60E-05	1.06	6.36E-06	1.07	9.3E-3	1.8
FW Train 1A	[5]	[5]	[5]	[5]	n/a	n/a
FW Train 1B	[5]	[5]	[5]	[5]	n/a	n/a
FW Train 1C	[5]	[5]	[5]	[5]	n/a	n/a
FW System	[5]	[5]	[5]	[5]	n/a	n/a

Notes:

(1) Sensitivity Case 2A internal events CDF = 1.52E-05/yr (Units 1 and 2).

(2) Sensitivity Case 2A internal events LERF = 1.20E-05/yr (Units 1 and 2).

(3) Sensitivity Case 2A internal fire CDF = 7.1E-5/yr (Unit 1).

(4) No internal fire LERF model available.

(5) Feedwater is assessed as of high safety significance for the base case. Additional Feedwater importance not calculated for Sensitivity Case 2A.

(6) Individual SSCs within the CS train 1B are <u>all</u> found to be less than the 0.005 threshold value for safety significance.

Table 4.6-5
OPTION 2 SENSITIVITY CASE 2B IMPORTANCE
MEASURES FOR RPV INJECTION FUNCTION
(REDUCED EMPHASIS IN COMMON CAUSE CONTRIBUTIONS)

Train/Systems	Internal Events				Internal Fire[4]	
	CDF[1]		LERF[2]		CDF[3]	
	FV	RAW	FV	RAW	FV	RAW
CS Train 1A	3.00E-05	1.00	0.00	1.00	4.0E-3	1.3
CS Train 1B	3.00E-05	1.00	0.00	1.00	6.3E-3[5]	1.5
CS System	6.00E-05	1.21	0.00	1.21	1.0E-2	2.1
FW Train 1A	0.00	1.00	0.00	1.00	n/a	n/a
FW Train 1B	0.00	1.01	0.00	1.00	n/a	n/a
FW Train 1C	0.00	1.00	0.00	1.00	n/a	n/a
FW System	0.00	4.59	0.00	3.46	n/a	n/a

Notes:

(1) Sensitivity Case 2B internal events CDF = 2.14E-06/yr (Units 1 and 2).

(2) Sensitivity Case 2B internal events LERF = 1.47E-06/yr (Units 1 and 2).

(3) Sensitivity Case 2B internal fire CDF = 6.2E-5/yr (Unit 1).

(4) No internal fire LERF model available to support quantification.

(5) Individual SSCs within the CS train 1B are all found to be less than the 0.005 threshold value for safety significance.

Table 4.6-6
OPTION 2 SENSITIVITY CASE 3 IMPORTANCE
MEASURES FOR RPV INJECTION FUNCTION
(REDUCED EMPHASIS ON MAINTENANCE UNAVAILABILITIES)

Train/Systems	Internal Events				Internal Fire[4]	
	CDF[1]		LERF[2]		CDF[3]	
	FV	RAW	FV	RAW	FV	RAW
CS Train 1A	1.30E-05	1.00	0.00	1.00	2.7E-3	1.3
CS Train 1B	1.30E-05	1.00	0.00	1.00	4.3E-3	1.5
CS System	2.60E-05	1.11	0.00	1.11	7.0E-3	2.0
FW Train 1A	0.00	1.00	0.00	1.00	n/a	n/a
FW Train 1B	1.60E-03	1.69	0.00	1.00	n/a	n/a
FW Train 1C	0.00	1.00	0.00	1.00	n/a	n/a
FW System	1.60E-03	3.74	0.00	3.05	n/a	n/a

Notes:

(1) Sensitivity Case 3 internal events CDF = 4.05E-06/yr (Units 1 and 2).

(2) Sensitivity Case 3 internal events LERF = 2.94E-06/yr (Units 1 and 2).

(3) Sensitivity Case 3 internal fire CDF = 4.8E-5/yr (Unit 1).

(4) No internal fire LERF model available.

Table 4.6-7
OPTION 2 SENSITIVITY CASE 4A IMPORTANCE
MEASURES FOR RPV INJECTION FUNCTION
(INCREASE OF THE RANDOM FAILURE PROBABILITIES) [6]

Train/Systems	Internal Events				Internal Fire[4]	
	CDF[1], [7]		LERF[2]		CDF[3], [8], [9]	
	FV	RAW	FV	RAW	FV	RAW
CS Train 1A	3.60E-05	1.00	0.00E+00	1.00	6.8E-3[10]	1.3
CS Train 1B	3.60E-05	1.00	0.00E+00	1.00	6.2E-3[10]	1.5
CS System	7.20E-05	1.12	0.00E+00	1.14	1.3E-2	2.0
FW Train 1A	[5]	[5]	[5]	[5]	n/a	n/a
FW Train 1B	[5]	[5]	[5]	[5]	n/a	n/a
FW Train 1C	[5]	[5]	[5]	[5]	n/a	n/a
FW System	[5]	[5]	[5]	[5]	n/a	n/a

Notes

(1) Sensitivity Case 4A internal events CDF = 1.62E-05/yr (Units 1 and 2).

(2) Sensitivity Case 4A internal events LERF = 1.04E-05/yr (Units 1 and 2).

(3) Sensitivity Case 4A internal fire CDF = 1.1E-4/yr (Unit 1).

(4) No internal fire LERF model available.

(5) Feedwater is assessed as of high safety significance for the base case. Additional Feedwater importance not calculated for Sensitivity Case 4A.

(6) Initiating event, HEP, maintenance, and AC non-recovery values not modified.

(7) Truncation limit increased from 5E-12/yr to 1E-10/yr.

(8) Truncation limit increased from 1E-9/yr to 1E-8/yr.

(9) Calculation includes additional modification to credit the availability of RHR Train B in scenario FZ067N to remove model conservatism.

(10) Individual SSCs within the CS train 1B are <u>all</u> found to be less than the 0.005 threshold value for safety significance.

Table 4.6-8
OPTION 2 SENSITIVITY CASE 4B IMPORTANCE
MEASURES FOR RPV INJECTION FUNCTION
(REDUCTION OF THE RANDOM FAILURE PROBABILITIES) [6]

Train/Systems	Internal Events				Internal Fire[4]	
	CDF[1]		LERF[2]		CDF[3]	
	FV	RAW	FV	RAW	FV	RAW
CS Train 1A	0.00E+00	1.00	0.00E+00	1.00	6.7E-4	1.3
CS Train 1B	0.00E+00	1.00	0.00E+00	1.00	1.1E-3	1.5
CS System	0.00E+00	1.08	0.00E+00	1.07	1.8E-3	2.0
FW Train 1A	[5]	[5]	[5]	[5]	n/a	n/a
FW Train 1B	[5]	[5]	[5]	[5]	n/a	n/a
FW Train 1C	[5]	[5]	[5]	[5]	n/a	n/a
FW System	[5]	[5]	[5]	[5]	n/a	n/a

Notes:

[1] Sensitivity Case 4B internal events CDF = 2.15E-06/yr (Units 1 and 2).

[2] Sensitivity Case 4B internal events LERF = 1.57E-06/yr (Units 1 and 2).

[3] Sensitivity Case 4B internal fire CDF = 4.5E-5/yr (Unit 1).

[4] No internal fire LERF model available.

[5] Feedwater is assessed as of high safety significance for the base case. Additional Feedwater importance not calculated for Sensitivity Case 4B.

[6] Initiating event, HEP, maintenance, and AC non-recovery values not modified.

5. INTEGRAL SAFETY SIGNIFICANCE RESULTS AND DISCUSSION

This section provides a focal point for summarizing the risk inputs to the IDP. Three separate types of input are discussed. These are:

- The integrated safety significance assessment – Section 5.1.
- The summary sheets by function giving the results of each of the aspects of the safety significance determination process – Section 5.2.
- A single tabular summary of the safety significance for the three systems by function – Section 5.3.

5.1 INTEGRAL RESULTS

In order to provide the IDP with an overall assessment of the Safety Significance of SSCs, an integrated computation is performed using the available importance measures from PRA calculations. This integrated importance measure essentially weights the importance from each risk contributor (e.g., internal events, fire, seismic PRAs) by the fraction of the total core damage frequency (or LERF, as appropriate) associated with that contributor. The following formulas define how such measures are to be computed for CDF. The same format can be used for LERF, if available, however, for the Quad Cities evaluation, a LERF model is only available for internal events.

Integrated Fussell-Vesely Importance

$$IFV_i = \frac{\sum_j \left(FV_{i,j} * CDF_j\right)}{\sum_j CDF_j}$$

Where

IFV_i = Integrated Fussell-Vesely Importance of Component i over all CDF Contributors

$FV_{i,j}$ = Fussell-Vesely Importance of Component i for CDF Contributor j

CDF_j = CDF of Contributor j

Integrated Risk Achievement Worth Importance

$$IRAW_i = 1 + \frac{\sum_j \left(RAW_{i,j} - 1\right) * CDF_j}{\sum_j CDF_j}$$

Where

$IRAW_i$ = Integrated Risk Achievement Worth of Component i over all CDF Contributors

$RAW_{i,j}$ = Risk Achievement Worth of Component i for CDF Contributor j

CDF_j = CDF of Contributor j

Once calculated, an assessment should be made of these integrated values against the screening criteria of Fussell-Vesely >0.005 or RAW >2. In no case will the integrated importance become higher than the maximum of the individual measures. However, it is possible that the integral value could be significantly less than the highest individual hazard contributor, if that contributor is small relative to the total CDF/LERF.

The quantitative PRA inputs for Quad Cities are from the internal events and fire PRA models for CDF. Therefore, the integrated importance measures are the weighted averages of the importance from these two quantifications. There are no explicit fire model calculations available for LERF. Therefore, the integral LERF measures are derived directly from the internal events PRA because no comparable LERF model exists for the other hazards. The LERF calculations are not repeated here.

The calculation of the integral importance measures for each of the system functions is performed in the following subsections:

- Core Spray – Section 5.1.1
- SBGTS – Section 5.1.2
- Feedwater – Section 5.1.3

5.1.1 Core Spray System

Each of the Core Spray functions is addressed to determine the integrated importance measures. These functions are as follows:

- RPV Injection
- Spray Distribution (sparger)
- RPV Boundary Protection/Containment (Pressure) Isolation
- Debris Retention
- Flood Prevention
- Keep-Fill
- Containment Flooding

System integrity is treated in two separate functions:

- RPV Boundary Protection/Containment Isolation
- Flooding Prevention/System Integrity

5.1.1.1 RPV Injection

<u>Core Damage</u>

The integral measures for CDF is derived by implementation of the formulae from the NEI Guidelines. Importance measures from CDF calculations for both internal events and fire events are available as input to the calculation.

$$IFV_{CS}^{CDF} = \frac{3.3E\text{-}5 * 4.6E\text{-}6/yr + 0.0 * 6.4E\text{-}5/yr}{6.9E\text{-}5/yr} = 2.E\text{-}06$$

$$IRAW_{CS}^{CDF} = \frac{0.12 * 4.6E\text{-}6/yr + 1.0 * 6.4E\text{-}5/yr}{6.9E\text{-}5/yr} + 1.0 = 1.07$$

The results confirm the low safety significance for the function relative to CDF.

5.1.1.2 Core Spray Containment Isolation and RPV Boundary

Core Damage

The raw integral measure for CDF is derived by implementation of the formulae from the NEI Guidelines. The importance measure from CDF calculations for both internal events and fire events is available as input to the calculation. The FV is not calculated because the RAW by itself indicates a safety significant SSC.

$$IRAW_{CS}^{CDF} = \frac{197 * 4.6E\text{-}6/yr + 0.0 * 6.4E\text{-}5/yr}{6.9E\text{-}5/yr} + 1.0 = 13.8$$

5.1.1.3 Spray Distribution

The importance measures for the spray distribution are determined by inspection. Specifically, the Spray distribution does not affect either the CDF or the LERF. Therefore, the importance measures are directly known.

Core Damage

$$IFV_{CS}^{CDF} = 0.0 \text{ (Internal Events and Fire Events)}$$

$$IRAW_{CS}^{CDF} = 1.0 \text{ (Internal Events and Fire Events)}$$

The integral importance measures are identical to those from the individual hazard assessments.

5.1.1.4 Debris Retention

The importance measures for the debris retention are determined by inspection. Specifically, the debris retention does not affect either the CDF or the LERF. Therefore, the importance measures are directly known.

Core Damage

$$IFV_{CS}^{CDF} = 0.0 \text{ (Internal Events and Fire Events)}$$

$$IRAW_{CS}^{CDF} = 1.0 \text{ (Internal Events and Fire Events)}$$

The integral importance measures are identical to those from the individual hazard assessments.

5.1.1.5 Flood Prevention

The importance measures for the flood prevention are determined by inspection. Specifically, flood prevention does not affect either the CDF or the LERF using the available models. Therefore, the importance measures are directly known.

Core Damage

$$IFV_{CS}^{CDF} = 0.0 \text{ (Internal Events and Fire Events)}$$

$$IRAW_{CS}^{CDF} = 1.0 \text{ (Internal Events and Fire Events)}$$

The integral importance measures are identical to those from the individual hazard assessments.

5.1.1.6 Keep Fill

The importance measures for the keep-fill are determined by inspection. Specifically, the keep-fill does not affect either the CDF or the LERF. Therefore, the importance measures are directly known.

Core Damage

$$IFV_{CS}^{CDF} = 0.0 \text{ (Internal Events and Fire Events)}$$

$$IRAW_{CS}^{CDF} = 1.0 \text{ (Internal Events and Fire Events)}$$

The integral importance measures are identical to those from the individual hazard assessments.

5.1.1.7 Containment Flooding

The importance measures for the containment flooding are determined by inspection. Specifically, the containment flooding spray distribution does not affect either the CDF or the LERF. Therefore, the importance measures are directly known.

Core Damage

$$IFV_{CS}^{CDF} = 0.0 \text{ (Internal Events and Fire Events)}$$

$$IRAW_{CS}^{CDF} = 1.0 \text{ (Internal Events and Fire Events)}$$

The integral importance measures are identical to those from the individual hazard assessments.

5.1.2 Standby Gas Treatment System

The Standby Gas Treatment System (SBGTS) functions are described in Appendix A and summarized in Table 3.4-1. They are evaluated here relative to the integral calculation:

- Filter effluent during release to environment
- Maintain negative pressure in secondary containment
- Containment Vent

The importance measures for SBGTS are determined by inspection. Specifically, the SBGTS does not affect either the CDF or the LERF. Therefore, the importance measures are directly known.

5.1.2.1 Filtration and Maintain Negative Pressure in RB

Core Damage

$$IFV = \frac{0.0 * 4.6E\text{-}6/yr + 0.0 * 6.4E\text{-}5/yr}{7.1E\text{-}5/yr} = 0.0$$

$$IRAW = \frac{0.0 * 4.6E\text{-}6/yr + 0.0 * 6.4E\text{-}5/yr + 1.0}{6.9E\text{-}5/yr} = 1.0$$

5.1.2.2 Containment Vent Via SBGTS

Core Damage

$$IFV_{CS}^{CDF} = 0.0 \text{ (Internal Events and Fire Events)}$$

$$IRAW_{CS}^{CDF} = 1.0 \text{ (Internal Events and Fire Events)}$$

The integral importance measures are identical to those from the individual hazard assessments.

5.1.3 Feedwater System

The Feedwater system functions are described in Appendix A and summarized in Table 3.4-1. The Feedwater system functions include the following:

- Containment Isolation/RPV Pressure Boundary
- RPV makeup by FW
- HPCI, RCIC, RWCU flowpath to the RPV
- Zinc and H2 injection flow paths
- High Pressure FW heating

- Low Pressure FW heating
- FW Flow regulation

5.1.3.1 Feedwater Containment Isolation/RPV Pressure Boundary

Core Damage

$$IFV^{CDF}_{FW} = \frac{0.0 * 4.6E\text{-}6/yr + 0.0 * 6.6E\text{-}5/yr}{6.9E\text{-}5/yr} = 0.0$$

$$IRAW^{CDF}_{FW} = \frac{1.2 * 4.6E\text{-}6/yr + 0.0 * 6.6E\text{-}5/yr}{6.9E\text{-}5/yr} + 1.0 = 1.07$$

5.1.3.2 RPV Makeup by Feedwater

Core Damage

$$IFV^{CDF}_{FW} = \frac{1.4E\text{-}3 * 4.6E\text{-}6/yr + 0.0 * 6.4E\text{-}5/yr}{6.9E\text{-}5/yr} = 9.1E\text{-}05$$

$$IRAW^{CDF}_{FW} = \frac{2.98 * 4.6E\text{-}6/yr + 1.0 * 6.4E\text{-}5/yr}{6.9E\text{-}5/yr} + 1.0 = 1.2$$

5.1.3.3 HPCI, RCIC, SSMP, RWCU Flowpath to the RPV

The Feedwater SSCs which provide the flow path to the RPV are the same pipes assessed under the RPV Pressure Boundary. In addition, the FW check valves that must operate (remain closed) are part of the containment isolation evaluation (of the PRA) of the pressure boundary. Therefore it is justified to use the integrated assessment from the Feedwater Containment Isolation and RPV Pressure Boundary assessment in 5.1.3.1.

5.1.3.4 Zinc and H_2 Flow Paths

The importance measures for the Zinc and H_2 flow paths are determined by inspection. Specifically, the Zinc and H_2 flow paths do not affect either the CDF or the LERF. Therefore, the importance measures are directly known.

<u>Core Damage</u>

IFV = 0.0

IRAW = 1.0

The integral importance measures are identical to those from the individual hazard assessments.

5.1.3.5 High and Low Pressure FW Heating

The importance measures for the high and low pressure FW heating function are determined by inspection. Specifically, the high and low pressure FW heating function does not affect either the CDF or the LERF. Therefore, the importance measures are directly known.

Core Damage

IFV = 0.0

IRAW = 1.0

The integral importance measures are identical to those from the individual hazard assessments.

5.1.3.6 FW Flow Regulation

Not quantified.

Considered safety significant based on complicated initiating event effect.

5.1.3.7 Flood Prevention

The importance measures for the flood prevention are determined by inspection. Specifically, flood prevention does not affect either the CDF or the LERF using the available models. Therefore, the importance measures are directly known.

Core Damage

$$IFV_{CS}^{CDF} = 0.0 \text{ (Internal Events and Fire Events)}$$

$$IRAW_{CS}^{CDF} = 1.0 \text{ (Internal Events and Fire Events)}$$

The integral importance measures are identical to those from the individual hazard assessments.

5.1.3.8 Keep Fill

The importance measures for the keep-fill are determined by inspection. Specifically, the keep-fill does not affect either the CDF or the LERF. Therefore, the importance measures are directly known.

Core Damage

$$IFV_{CS}^{CDF} = 0.0 \text{ (Internal Events and Fire Events)}$$

$$IRAW_{CS}^{CDF} = 1.0 \text{ (Internal Events and Fire Events)}$$

The integral importance measures are identical to those from the individual hazard assessments.

5.2 RESULTS OF THE SIGNIFICANCE DETERMINATION

The NEI Guideline for the Classification of System, Structure, and Components (SSCs) is implemented for the three pilot systems. The results for the three pilot systems are summarized in Table 5.2-0. Part A is a qualitative summary of the analysis results including the overall recommendation regarding the safety significance.

Part B is a tabular summary of the individual analyses results regarding safety significance for each hazard or operating mode investigated and the integral results. Table B is a direct input into Table A.

Table 5.2-0
LISTING OF THE SUMMARY TABLES USED TO PROVIDE INPUT TO THE IDP REGARDING SYSTEM AND FUNCTION SAFETY

System Component	Function	Summary Table
Core Spray	RPV Injection	5.2-1 A&B
	Containment Isolation/Pressure Boundary Integrity	5.2-2 A&B
	Spray Distribution	5.2-3 A&B
	Debris Retention	5.2-4 A&B
	Flood Prevention	5.2-5 A&B
	Keep-Fill	5.2-6 A&B
	Containment Flooding	5.2-7 A&B
SBGTS	Filtration	5.2-8 A&B
	Maintain Negative Pressure in RB	5.2-8 A&B
	Containment Vent	5.2-9 A&B
Feedwater	RPV Make-Up	5.2-10 A&B
	Containment Isolation/RPV Boundary	5.2-11 A&B
	HPCI, RCIC, RWCU Flow Paths	5.2-12 A&B
	Zinc and H_2 Flow Path to RPV	5.2-13 A&B
	High Pressure FW Heating	5.2-14 A&B
	Low Pressure FW Heating	5.2-14 A&B
	FW Flow Regulation	5.2-15 A&B
	Flood Prevention	5.2-16 A&B

Table 5.2-1A

RISK-INFORMED SSC ASSESSMENT WORKSHEET

SSC(S) EVALUATED:	Core Spray (Except Containment Isolation Valves)
SAFETY RELATED:	YES X NO __
DESIGN BASIS FUNCTION (S) SUPPORTED:	RPV Injection
PRA FUNCTIONS SUPPORTED:	RPV Injection (except CS injection valves).
INITIATING EVENT IMPACT:	Core Spray does not lead to a complicated initiator (except CS injection valves).
SENSITIVITY RESULTS:	Sensitivity Results Confirm the Base Case Information.
DEFENSE IN DEPTH/COMMON CAUSE ASSESSMENT:	Defense-in-Depth examined and multiple redundant methods available to fulfill the function.
INTERNAL EVENTS RISK CONTRIBUTION:	Importance measures from the internal events PRA show low safety significance when evaluated consistent with NEI 00-04 Guideline and risk metrics.
OTHER RISK CONTRIBUTIONS:	Seismic, Fire, Shutdown, and "Other" external event evaluations do not indicate potential risk contributions that meet the NEI 00-04 Guideline for safety significant.
INTEGRATED IMPORTANCE IMPACTS:	The calculated integrated importance measures are below the NEI Guideline, NEI 00-04, for safety significance using the FV and RAW risk metrics.
ABOVE SAFETY SIGNIFICANCE THRESHOLD	YES _ NO X___
BASIS FOR RECOMMENDED SSC CATEGORIZATION:	Assessed as low safety significance with adequate defense -in-depth.
SAFETY SIGNIFICANCE ATTRIBUTES:	• Two Independent, Redundant Trains • Normal and Emergency AC Power • Automatic Initiation

	• Safety Related Water Source • Used for DBA LOCA Response

Table 5.2-1B
RISK-INFORMED SSC ASSESSMENT WORKSHEET -- SSC(s) EVALUATED:
CORE SPRAY (EXCEPT CONTAINMENT ISOLATION VALVES)

Hazards		Potentially Safety Significant	Potentially Low Safety Significant	Not Addressed	Comments
Internal Events	CDF		X		PSA
	LERF		X		PSA
Fire	CDF		X		Fire PSA
	LERF		X		Estimated
Seismic	CDF		X		Seismic Margin
	LERF		X		Seismic Margin
"Other" External Events	CDF		X		IPEEE Screening
	LERF		X		IPEEE Screening
Low Power/Shutdown	CDF		X		RMGs
	LERF		X		RMGs
Integral	CDF		X		
	LERF		X		

Table 5.2-2A

RISK-INFORMED SSC ASSESSMENT WORKSHEET

SSC(S) EVALUATED:	Core Spray Pressure Isolation Valves (Injection Line)/RPV Boundary.
SAFETY RELATED:	YES X NO __
DESIGN BASIS FUNCTION (S) SUPPORTED:	Containment Isolation and RPV Boundary Integrity.
PRA FUNCTIONS SUPPORTED:	Isolation Function and RPV Pressure Boundary Integrity.
INITIATING EVENT IMPACT:	Core Spray injection valve failures could lead to a complicated initiating event with little or no mitigating capability. The Core Spray injection line integrity inside containment is needed to preserve the RPV pressure boundary. Failure of the Core Spray injection lines is calculated not to be a complicated initiating event.
SENSITIVITY STUDY RESULTS:	No sensitivity studies performed.
DEFENSE IN DEPTH/COMMON CAUSE ASSESSMENT:	Prevention defense-in-depth identified as inspection and leak before break. Mitigation defense-in-depth is adequate.
INTERNAL EVENTS RISK CONTRIBUTION:	Importance measures from the internal events PRA show the CS injection valves to be safety significant when evaluated consistent with NEI 00-04 Guideline and risk metrics. RPV boundary is assessed as low safety significant.
OTHER RISK CONTRIBUTIONS:	Seismic, Fire, and “Other” external event evaluations do not indicate potential risk contributions that meet the NEI 00-04 Guideline for safety significant. Shutdown evaluation according to NEI 00-04 leads to assignment of safety significant to both:

	– CS injection valves – RPV boundary
INTEGRATED IMPORTANCE IMPACTS:	The calculated integrated importance measures are below the NEI Guideline, NEI 00-04, for safety significance using the FV and RAW risk metrics for the RPV pressure boundary. For CS Isolation, the integrated RAW is greater than NEI 00-04 Guideline for safety significance.
ABOVE SAFETY SIGNIFICANCE THRESHOLD:YES X[71)] NO __ BASIS FOR RECOMMENDED SSC CATEGORIZATION:Assessed as Safety Significant because: CS Injection Valves – High RAW for CDF and LERF from Internal Events PRA CS Injection Lines – Potential for Complicated initiating event	
SAFETY SIGNIFICANCE ATTRIBUTES:	• Preserve Containment isolation. • Preserve RPV Pressure Boundary • Avoid Complicated Challenges to Safe Shutdown

Table 5.2-2B

RISK-INFORMED SSC ASSESSMENT WORKSHEET -- SSC(s) EVALUATED: CORE SPRAY PRESSURE ISOLATION VALVES (INJECTION LINE) AND RPV BOUNDARY

Hazards		Potentially Safety Significant	Potentially Low Safety Significant	Not Addressed	Comments
Internal Events	CDF	X(1)			PSA
	LERF	X(1)			PSA
Fire	CDF		X		Fire PSA
	LERF		X		Estimated
Seismic	CDF		X		Seismic Margin
	LERF		X		Seismic Margin
"Other" External Events	CDF		X		IPEEE Screening
	LERF		X		IPEEE Screening
Low Power/Shutdown	CDF	X(2)			RMGs(2)
	LERF	X(2)			RMGs(2)
Integral	CDF	X(1)			
	LERF	X(1)			

(1) Isolation Valves only.
(2) Deterministic guideline assessment used to assign safety significance to both the isolation valves and RPV boundary under shutdown conditions.

Table 5.2-3A
RISK-INFORMED SSC ASSESSMENT WORKSHEET

SSC EVALUATED:	Core Spray Distribution Sparger.
SAFETY RELATED:	YES X NO __
DESIGN BASIS FUNCTION SUPPORTED:	Fuel Element Spray Cooling.
PRA FUNCTIONS SUPPORTED:	None.
INITIATING EVENT IMPACT:	None.
SENSITIVITY STUDY RESULTS:	No sensitivity studies performed.
DEFENSE IN DEPTH/COMMON CAUSE ASSESSMENT:	Defense-in-Depth for spray is not available, however spray is not required to reach a safe stable state.
INTERNAL EVENTS RISK CONTRIBUTION:	Importance measures from the internal events PRA show the CS sparger to be of low safety significance when evaluated consistent with NEI 00-04 Guideline and risk metrics.
OTHER RISK CONTRIBUTIONS:	Seismic, Fire, Shutdown, and "Other" external event evaluations do not indicate potential risk contributions that meet the NEI 00-04 Guideline for safety significant.
INTEGRATED IMPORTANCE IMPACTS:	The calculated integrated importance measures are below the NEI Guideline, NEI 00-04, for safety significance using the FV and RAW risk metrics.
ABOVE SAFETY SIGNIFICANCE THRESHOLD:	YES __ NO X
BASIS FOR RECOMMENDED SSC CATEGORIZATION:	Assessed as low safety significant: Not important in the risk evaluation of Quad Cities and does not lead to a complicated initiating event. No defense in depth for spray function, however, it is not required in the risk assessment.
SAFETY SIGNIFICANCE ATTRIBUTES:	None.

Table 5.2-3B
RISK-INFORMED SSC ASSESSMENT WORKSHEET -- SSC(s)
EVALUATED: CORE SPRAY DISTRIBUTION SPARGER

Hazards		Potentially Safety Significant	Potentially Low Safety Significant	Not Addressed	Comments
Internal Events	CDF		X		PSA
	LERF		X		PSA
Fire	CDF		X		Fire PSA
	LERF		X		Estimated
Seismic	CDF		X		Seismic Margin
	LERF		X		Seismic Margin
"Other" External Events	CDF		X		IPEEE Screening
	LERF		X		IPEEE Screening
Low Power/Shutdown	CDF		X		RMGs
	LERF		X		RMGs
Integral	CDF		X		
	LERF		X		

Table 5.2-4A

RISK-INFORMED SSC ASSESSMENT WORKSHEET

SSC(s) EVALUATED:	Core Spray Debris Retention
SAFETY RELATED:	YES __ NO X
DESIGN BASIS FUNCTION SUPPORTED:	None.
PRA FUNCTIONS SUPPORTED:	RPV Injection post RPV Breach.
INITIATING EVENT IMPACT:	Failure of function does not lead to a complicated initiator.
SENSITIVITY RESULTS:	Sensitivity Results Confirm the Base Case Information (see RPV Injection function).
DEFENSE IN DEPTH/COMMON CAUSE ASSESSMENT:	Defense-in-Depth examined and multiple redundant methods available to fulfill the function.
INTERNAL EVENTS RISK CONTRIBUTION:	Importance measures from the internal events PRA show low safety significance when evaluated consistent with NEI 00-04 Guideline and risk metrics.
OTHER RISK CONTRIBUTIONS:	Seismic, Fire, Shutdown, and "Other" external event evaluations do not indicate potential risk contributions that meet the NEI 00-04 Guideline for safety significant.
INTEGRATED IMPORTANCE IMPACTS:	The calculated integrated importance measures are below the NEI Guideline, NEI 00-04, for safety significance using the FV and RAW risk metrics.
ABOVE SAFETY SIGNIFICANCE THRESHOLD:	YES __ NO X
BASIS FOR RECOMMENDED SSC CATEGORIZATION:	Low assessed safety significance with adequate defense –in-depth.

SSC(s) EVALUATED:	Core Spray Debris Retention
SAFETY SIGNIFICANCE ATTRIBUTES:	• Two Independent, Redundant Trains • Normal and Emergency AC Power • Automatic Initiation • Safety Related Water Source • Used for DBA LOCA Response

Table 5.2-4B
RISK-INFORMED SSC ASSESSMENT WORKSHEET -- SSC(s)
EVALUATED: CORE SPRAY DEBRIS RETENTION

Hazards		Potentially Safety Significant	Potentially Low Safety Significant	Not Addressed	Comments
Internal Events	CDF		X		PSA
	LERF		X		PSA
Fire	CDF		X		Fire PSA
	LERF		X		Estimated
Seismic	CDF		X		Seismic Margin
	LERF		X		Seismic Margin
"Other" External Events	CDF		X		IPEEE Screening
	LERF		X		IPEEE Screening
Low Power/Shutdown	CDF		X		RMGs
	LERF		X		RMGs
Integral	CDF		X		
	LERF		X		

Table 5.2-5A

RISK-INFORMED SSC(s) ASSESSMENT WORKSHEET

SSC(s) EVALUATED:	Core Spray Flood Prevention
SAFETY RELATED:	YES X NO __
DESIGN BASIS FUNCTION SUPPORTED:	Prevent flooding and prevent damage to other critical safety functions.
PRA FUNCTIONS SUPPORTED:	Prevent flooding and prevent damage to other critical safety functions. Truncated from the internal events PRA as negligible risk impact.
INITIATING EVENT IMPACT:	Failure of function does not lead to a complicated initiator, i.e., FV is not > 0.005
SENSITIVITY RESULTS:	Sensitivity Results Confirm the Base Case Information.
DEFENSE IN DEPTH/COMMON CAUSE ASSESSMENT:	Defense-in-Depth examined and multiple redundant methods available to fulfill the critical safety functions given the failure of the flood prevention function.
INTERNAL EVENTS RISK CONTRIBUTION:	Pipe segments are truncated from the model. Therefore, importance measures from the internal events PRA show low safety significance when evaluated consistent with NEI 00-04 Guideline and risk metrics.
OTHER RISK CONTRIBUTIONS:	Seismic, Fire, Shutdown, and "Other" external event evaluations do not indicate potential risk contributions that meet the NEI 00-04 Guideline for safety significant.
INTEGRATED IMPORTANCE IMPACTS:	The calculated integrated importance measures are below the NEI Guideline, NEI 00-04, for safety significance using the FV and RAW risk metrics.
ABOVE SAFETY SIGNIFICANCE THRESHOLD:	YES __ NO X
BASIS FOR RECOMMENDED SSC CATEGORIZATION:	Low assessed safety significance with adequate defense -in-depth.
SAFETY SIGNIFICANCE ATTRIBUTES:	Maintain Boundary integrity – a passive function

Table 5.2-5B
RISK-INFORMED SSC ASSESSMENT WORKSHEET -- SSC(s)
EVALUATED: CORE SPRAY FLOOD PREVENTION

Hazards		Potentially Safety Significant	Potentially Low Safety Significant	Not Addressed	Comments
Internal Events	CDF		X		PSA
	LERF		X		PSA
Fire	CDF		X		Fire PSA
	LERF		X		Estimated
Seismic	CDF		X		Seismic Margin
	LERF		X		Seismic Margin
"Other" External Events	CDF		X		IPEEE Screening
	LERF		X		IPEEE Screening
Low Power/Shutdown	CDF		X		RMGs
	LERF		X		RMGs
Integral	CDF		X		
	LERF		X		

Table 5.2-6A
RISK-INFORMED SSC ASSESSMENT WORKSHEET

SSC(s) EVALUATED:	Core Spray Keep-Fill
SAFETY RELATED:	YES ___ NO X
DESIGN BASIS FUNCTION(s) SUPPORTED:	None
PRA FUNCTIONS SUPPORTED:	Prevent water hammer in ECCS systems.

SSC(s) EVALUATED:	Core Spray Keep-Fill
INITIATING EVENT IMPACT:	Failure of function does not lead to a complicated initiator.
SENSITIVITY RESULTS:	Sensitivity Results Confirm the Base Case Information (see RPV Injection function).
DEFENSE IN DEPTH/COMMON CAUSE ASSESSMENT:Defense-in-Depth examined and multiple redundant methods not required.[81)]	
INTERNAL EVENTS RISK CONTRIBUTION:	Importance measures from the internal events PRA show low safety significance when evaluated consistent with NEI 00-04 Guideline and risk metrics
OTHER RISK CONTRIBUTIONS:	Seismic, Fire, Shutdown, and "Other" external event evaluations do not indicate potential risk contributions that meet the NEI 00-04 Guideline for safety significant.
INTEGRATED IMPORTANCE IMPACTS:	The calculated integrated importance measures are below the NEI Guideline, NEI 00-04, for safety significance using the FV and RAW risk metrics.
ABOVE SAFETY SIGNIFICANCE THRESHOLD:	YES __ NO X
BASIS FOR RECOMMENDED SSC CATEGORIZATION:	Low assessed safety significance with adequate defense -in-depth.
SAFETY SIGNIFICANCE ATTRIBUTES:	Prevention of water hammer.

Table 5.2-6B
RISK-INFORMED SSC ASSESSMENT WORKSHEET -- SSC(s)
EVALUATED: CORE SPRAY KEEP-FILL

Hazards		Potentially Safety Significant	Potentially Low Safety Significant	Not Addressed	Comments
Internal Events	CDF		X		PSA
	LERF		X		PSA
Fire	CDF		X		Fire PSA
	LERF		X		Estimated
Seismic	CDF		X		Seismic Margin
	LERF		X		Seismic Margin
"Other" External Events	CDF		X		IPEEE Screening
	LERF		X		IPEEE Screening
Low Power/Shutdown	CDF		X		RMGs
	LERF		X		RMGs
Integral	CDF		X		
	LERF		X		

Table 5.2-7A
RISK-INFORMED SSC ASSESSMENT WORKSHEET

SSC(S) EVALUATED:	Core Spray Containment Flooding.
SAFETY RELATED:	YES __ NO X
DESIGN BASIS FUNCTION (S) SUPPORTED:	None.
PRA FUNCTIONS SUPPORTED:	Containment Injection for flooding.
INITIATING EVENT IMPACT:	Failure of function does not lead to a complicated initiator.
SENSITIVITY RESULTS:	Sensitivity Results Confirm the Base Case Information (see RPV Injection function).
DEFENSE IN DEPTH/COMMON CAUSE ASSESSMENT:	Defense-in-Depth examined and multiple redundant methods available to fulfill the function.
INTERNAL EVENTS RISK CONTRIBUTION:	Importance measures from the internal events PRA show low safety significance when evaluated consistent with NEI 00-04 Guideline and risk metrics.
OTHER RISK CONTRIBUTIONS:	Seismic, Fire, Shutdown, and "Other" external event evaluations do not indicate potential risk contributions that meet the NEI 00-04 Guideline for safety significant.
INTEGRATED IMPORTANCE IMPACTS:	The calculated integrated importance measures are below the NEI Guideline, NEI 00-04, for safety significance using the FV and RAW risk metrics.
ABOVE SAFETY SIGNIFICANCE THRESHOLD:	YES _ NO X
BASIS FOR RECOMMENDED SSC CATEGORIZATION:	Low assessed safety significance with adequate defense -in-depth because other methods are the preferred methods of flooding containment.

Table 5.2-7B
RISK-INFORMED SSC ASSESSMENT WORKSHEET -- SSC(s)
EVALUATED: CORE SPRAY CONTAINMENT FLOODING

Hazards		Potentially Safety Significant	Potentially Low Safety Significant	Not Addressed	Comments
Internal Events	CDF		X		PSA
	LERF		X		PSA
Fire	CDF		X		Fire PSA
	LERF		X		Estimated
Seismic	CDF		X		Seismic Margin
	LERF		X		Seismic Margin
"Other" External Events	CDF		X		IPEEE Screening
	LERF		X		IPEEE Screening
Low Power/Shutdown	CDF		X		RMGs
	LERF		X		RMGs
Integral	CDF		X		
	LERF		X		

Table 5.2-8A
RISK-INFORMED SSC ASSESSMENT WORKSHEET

SSC(S) EVALUATED:	SBGTS Filtration and Maintenance of RB Negative Pressure
SAFETY RELATED:	YES X NO __
DESIGN BASIS FUNCTION (S) SUPPORTED:	• Maintain Negative Pressure in R.B. • Filter effluent for DBA leakage

SSC(S) EVALUATED:	SBGTS Filtration and Maintenance of RB Negative Pressure
PRA FUNCTIONS SUPPORTED:	None.
INITIATING EVENT IMPACT:	No complicated initiating event occurs as a result of SBGTS failures.
SENSITIVITY RESULTS:No sensitivity cases required.[91)]	
DEFENSE IN DEPTH/COMMON CAUSE ASSESSMENT:	Defense-in-depth for the design basis functions is provided by the redundant SBGTS trains.
INTERNAL EVENTS RISK CONTRIBUTION:	Importance measures inferred from the internal events PRA show low safety significance when evaluated consistent with NEI 00-04 Guideline and risk metrics.
OTHER RISK CONTRIBUTIONS:	Seismic, Fire, Shutdown, and "Other" external event evaluations do not indicate potential risk contributions that meet the NEI 00-04 Guideline for safety significant.
INTEGRATED IMPORTANCE IMPACTS:	The calculated integrated importance measures are below the NEI Guideline, NEI 00-04, for safety significance using the FV and RAW risk metrics.
ABOVE SAFETY SIGNIFICANCE THRESHOLD:	YES _ NO X
BASIS FOR RECOMMENDED SSC CATEGORIZATION:	Low safety significance determined by all risk contributions assessed.
SAFETY SIGNIFICANCE ATTRIBUTES:	Performs narrow design basis function to provide decontamination factor on fission products including elemental iodine.

Table 5.2-8B
RISK-INFORMED SSC ASSESSMENT WORKSHEET -- SSC(s) EVALUATED: SBGTS FILTRATION AND MAINTENANCE OF RB NEGATIVE PRESSURE

Hazards		Potentially Safety Significant	Potentially Low Safety Significant	Not Addressed	Comments
Internal Events	CDF		X		PSA
	LERF		X		PSA
Fire	CDF		X		Fire PSA
	LERF		X		Fire PSA
Seismic	CDF		X		Seismic Margin
	LERF		X		Seismic Margin
"Other" External Events	CDF		X		IPEEE Screening
	LERF		X		IPEEE Screening
Low Power/Shutdown	CDF		X		RMGs
	LERF		X		RMGs
Integral	CDF		X		
	LERF		X		

Table 5.2-9A
RISK-INFORMED SSC ASSESSMENT WORKSHEET

SSC(S) EVALUATED:	SBGTS – Containment Vent
SAFETY RELATED:	YES __ NO X
DESIGN BASIS FUNCTION (S) SUPPORTED:	None.

SSC(S) EVALUATED:	SBGTS – Containment Vent
PRA FUNCTIONS SUPPORTED:	None of any safety significance (small vent pathway) as assessed using CDF or LERF.
INITIATING EVENT IMPACT:	No complicated initiating event occurs as a result of SBGTS failures to vent.
SENSITIVITY RESULTS:No sensitivity cases required.[101)]	
DEFENSE IN DEPTH/COMMON CAUSE ASSESSMENT:	No design basis function.
INTERNAL EVENTS RISK CONTRIBUTION:	Importance measures from the internal events PRA show low safety significance when evaluated consistent with NEI 00-04 Guideline and risk metrics.
OTHER RISK CONTRIBUTIONS:	Seismic, Fire, Shutdown, and "Other" external event evaluations do not indicate potential risk contributions that meet the NEI 00-04 Guideline for safety significant.
INTEGRATED IMPORTANCE IMPACTS:	The calculated integrated importance measures are below the NEI Guideline, NEI 00-04, for safety significance using the FV and RAW risk metrics.
ABOVE SAFETY SIGNIFICANCE THRESHOLD:	YES _ NO X
BASIS FOR RECOMMENDED SSC CATEGORIZATION:	Low safety significance
SAFETY SIGNIFICANCE ATTRIBUTES:	Provide very limited containment vent capability, through 2" vent paths. This function is a "normal" capability i.e., not sufficient for severe accident mitigation measure.

Table 5.2-9B
RISK-INFORMED SSC ASSESSMENT WORKSHEET -- SSC(s)
EVALUATED: SBGTS CONTAINMENT VENT

Hazards		Potentially Safety Significant	Potentially Low Safety Significant	Not Addressed	Comments
Internal Events	CDF		X		PSA
	LERF		X		PSA
Fire	CDF		X		Fire PSA
	LERF		X		Fire PSA
Seismic	CDF		X		Seismic Margin
	LERF		X		Seismic Margin
"Other" External Events	CDF		X		IPEEE Screening
	LERF		X		IPEEE Screening
Low Power/Shutdown	CDF		X		RMGs
	LERF		X		RMGs
Integral	CDF		X		
	LERF		X		

Table 5.2-10A
RISK-INFORMED SSC ASSESSMENT WORKSHEET

SSC(S) EVALUATED:	Feedwater for RPV Injection
SAFETY RELATED:	YES __ NO X
DESIGN BASIS FUNCTION (S) SUPPORTED:	None
PRA FUNCTIONS SUPPORTED:	RPV Injection.

SSC(S) EVALUATED:	Feedwater for RPV Injection
INITIATING EVENT IMPACT:	FW failure leads to a complicated initiator. (See Risk Contribution discussion)
SENSITIVITY RESULTS:	Sensitivity Results Confirm the Base Case Information.
DEFENSE IN DEPTH/COMMON CAUSE ASSESSMENT:	Defense-in-Depth examined and multiple redundant methods available to fulfill the function.
INTERNAL EVENTS RISK CONTRIBUTION:	Importance measures from the internal events PRA show low safety significance for all individual SSCs when evaluated consistent with NEI 00-04 Guideline and risk metrics. The system as a whole also has a RAW greater than 2.0. The initiator has a high FV of 0.03 and can be determined to be a complicated initiating event. This leads to the assignment to the safety significant category.
OTHER RISK CONTRIBUTIONS:	Seismic, Fire, Shutdown, and "Other" external event evaluations do not indicate potential risk contributions that meet the NEI 00-04 Guideline for safety significant.
INTEGRATED IMPORTANCE IMPACTS:	The calculated integrated importance measures are below the NEI Guideline, NEI 00-04, for safety significance using the FV and RAW risk metrics.
ABOVE SAFETY SIGNIFICANCE THRESHOLD:	YES X NO _

SSC(S) EVALUATED:	Feedwater for RPV Injection
BASIS FOR RECOMMENDED SSC CATEGORIZATION:The feedwater system is considered safety significant[1] when assessed for its RPV injection function based on the fact that the failure of the function can create a complicated initiating event with a relatively high FV (i.e., 0.03).	Despite the low assessed safety significance for all SSCs within the feedwater system; and despite adequate defense-in-depth, the potential for a complicated initiating event results in assignment to the safety significant category.
SAFETY SIGNIFICANCE ATTRIBUTES:	– Normal AC Power – No safety related function – Not single failure proof

(1) The feedwater system for the RPV Injection Function has been evaluated according to the NEI Guideline and it is determined that while all the SSCs have importance measures less than the "safety significant" threshold and there is adequate defense-in-depth, the feedwater SSCs are placed in the safety significant category because loss of feedwater is a complicated initiating event (loss of RPV injection function and FV>0.005). Individual components within the feedwater system have not been singled out as the potential cause of loss of feedwater events. This exercise could result in reducing the number of FW SSCs considered to be safety significant. This exercise has not been included in the preparatory work performed for the IDP.

Table 5.2-10B
RISK-INFORMED SSC ASSESSMENT WORKSHEET -- SSC(s)
EVALUATED: FEEDWATER FOR RPV INJECTION

Hazards		Potentially Safety Significant	Potentially Low Safety Significant	Not Addressed	Comments
Internal Events	CDF	X			PSA
	LERF	X			PSA
Fire	CDF		X		Fire PSA
	LERF		X		Estimated
Seismic	CDF		X		Seismic Margin
	LERF		X		Seismic Margin
"Other" External Events	CDF		X		IPEEE Screening
	LERF		X		IPEEE Screening
Low Power/Shutdown	CDF		X		RMGs
	LERF		X		RMGs
Integral	CDF		X		
	LERF		X		

Table 5.2-11A

RISK-INFORMED SSC ASSESSMENT WORKSHEET

SSC(S) EVALUATED:	Feedwater for Containment Isolation and RPV Boundary Protection
SAFETY RELATED:	YES X NO _
DESIGN BASIS FUNCTION (S) SUPPORTED:	Containment Isolation and RPV Boundary Protection
PRA FUNCTIONS SUPPORTED:	Containment Isolation and RPV Boundary Protection
SENSITIVITY STUDY RESULTS:	No sensitivity cases required.
DEFENSE IN DEPTH/COMMON CAUSE ASSESSMENT:	LERF could be increased by Isolation Failure. RPV pressure boundary is a passive function with no defense-in-depth.
INTERNAL EVENTS RISK CONTRIBUTION:	Importance measures from the internal events PRA show the containment isolation function to be safety significant when evaluated consistent with NEI 00-04 Guideline and risk metrics. The RPV pressure boundary integrity is low safety significant based on the internal events PRA and it cannot create a complicated initiating event because the FV is <0.005.
OTHER RISK CONTRIBUTIONS:	Seismic, Fire, and "Other" external event evaluations do not indicate potential risk contributions that meet the NEI 00-04 Guideline for safety significant. Shutdown Guideline indicate that the RPV pressure boundary and the isolation valves could create an initiating event and therefore this qualifies them as safety significant.
INTEGRATED IMPORTANCE IMPACTS:	The calculated integrated importance measures are below the NEI Guideline, NEI 00-04, for safety significance using the FV and RAW risk metrics.
ABOVE SAFETY SIGNIFICANCE THRESHOLD:	YES X NO _

SSC(S) EVALUATED:	Feedwater for Containment Isolation and RPV Boundary Protection
BASIS FOR RECOMMENDED SSC CATEGORIZATION:	The isolation valves represent critical SSCs to preserve low the LERF calculation. The RPV pressure boundary integrity is safety significant using the shutdown deterministic guideline for safety significance.
SAFETY SIGNIFICANCE ATTRIBUTES:	• Double isolation check valves • RPV pressure boundary

Table 5.2-11B
RISK-INFORMED ASSESSMENT WORKSHEET -- SSC(s)
EVALUATED: FEEDWATER FOR CONTAINMENT
ISOLATION AND RPV BOUNDARY PROTECTION

Hazards		Potentially Safety Significant	Potentially Low Safety Significant	Not Addressed	Comments
Internal Events	CDF	X()			PSA
	LERF	X(1)			PSA
Fire	CDF		X		Fire PSA
	LERF		X		Fire PSA
Seismic	CDF		X		Seismic Margin
	LERF		X		Seismic Margin
"Other" External Events	CDF		X		IPEEE Screening
	LERF		X		IPEEE Screening
Low Power/Shutdown	CDF	X(2)	X		RMGs
	LERF	X(2)	X		RMGs
Integral	CDF		X		
	LERF		X		

(
(1) Isolation valves only
(2) Deterministic guideline assessment used to assign safety significance to both the isolation valves and the RPV boundary.

Table 5.2-12A
RISK-INFORMED SSC ASSESSMENT WORKSHEET

SSC(S) EVALUATED:	Feedwater for HPCI, RCIC, SSMP, RWCU Flow Paths to the RPV
SAFETY RELATED:	YES _X_ NO __
DESIGN BASIS FUNCTION (S) SUPPORTED:	None
PRA FUNCTIONS SUPPORTED:	RPV Injection for HPCI, RCIC, SSMP, RWCU
INITIATING EVENT IMPACT:	Functional failure does not lead to a complicated initiator because the FV is less than 0.005.
SENSITIVITY RESULTS:	No sensitivity cases required.
DEFENSE IN DEPTH/COMMON CAUSE ASSESSMENT:	Defense-in-Depth examined. Multiple redundant high pressure makeup methods can be compromised based on the failure of the FW pathway, but there is still adequate defense-in-depth.
INTERNAL EVENTS RISK CONTRIBUTION:	RAW importance measures from the internal events PRA show the flow path and check valves to be significant when evaluated consistent with NEI 00-04 Guideline and risk metrics.
OTHER RISK CONTRIBUTIONS:	Seismic, Fire, Shutdown, and "Other" external event evaluations do not indicate potential risk contributions that meet the NEI 00-04 Guideline for safety significant with the exception of the RWCU pathway for certain shutdown conditions which depend on RWCU for heat removal.
INTEGRATED IMPORTANCE IMPACTS:	The calculated integrated importance measures are below the NEI Guideline, NEI 00-04, for safety significance using the FV and RAW risk metrics.
ABOVE SAFETY SIGNIFICANCE THRESHOLD:	YES _X_ NO ___

SSC(S) EVALUATED:	Feedwater for HPCI, RCIC, SSMP, RWCU Flow Paths to the RPV
BASIS FOR RECOMMENDED SSC CATEGORIZATION:	RAW from the internal events PSA insights and the fact that RWCU interruption under certain low frequency shutdown conditions could lead to a loss of shutdown cooling initiator is the basis for the categorization.
SAFETY SIGNIFICANCE ATTRIBUTES:	• Passive pathway

Table 5.2-12B
RISK-INFORMED SSC ASSESSMENT WORKSHEET -- SSC(s)
EVALUATED: FEEDWATER FOR RPV INJECTION
PATHWAY FOR HPCI, RCIC, AND RWCU

Hazards		Potentially Safety Significant	Potentially Low Safety Significant	Not Addressed	Comments
Internal Events	CDF	X			PSA
	LERF	X			PSA
Fire	CDF		X		Fire PSA
	LERF		X		Estimated
Seismic	CDF		X		Seismic Margin
	LERF		X		Seismic Margin
"Other" External Events	CDF		X		IPEEE Screening
	LERF		X		IPEEE Screening
Low Power/Shutdown	CDF	X(1)			RMGs
	LERF		X		RMGs
Integral	CDF		X		
	LERF		X		

(1) Deterministic guidelines for shutdown direct the loss of RWCU potential to be included as a potential shutdown initiator. This could be shown to be a negligible quantitative risk contributor in a quantitative shutdown risk model.

Table 5.2-13A
RISK-INFORMED SSC ASSESSMENT WORKSHEET

SSC(S) EVALUATED:	Feedwater for Zinc and H_2 Flow Path to RPV
SAFETY RELATED:	YES __ NO _X_
DESIGN BASIS FUNCTION (S) SUPPORTED:	None
PRA FUNCTIONS SUPPORTED:	None
SENSITIVITY STUDY RESULTS:	No sensitivity cases required.
DEFENSE IN DEPTH/COMMON CAUSE ASSESSMENT:	None
INTERNAL EVENTS RISK CONTRIBUTION:	No modeling of these functions in the PRA because the function has been screened out as having a low safety significance for accident initiation or accident mitigation.
OTHER RISK CONTRIBUTIONS:	Seismic, Fire, Shutdown, and "Other" external event evaluations do not indicate potential risk contributions that meet the NEI 00-04 Guideline for safety significant.
INTEGRATED IMPORTANCE IMPACTS:	There are no calculated importance measures.
ABOVE SAFETY SIGNIFICANCE THRESHOLD:	YES __ NO _X_
BASIS FOR RECOMMENDED SSC CATEGORIZATION:	No accident mitigation or accident initiation impact.
SAFETY SIGNIFICANCE ATTRIBUTES:	None

Table 5.2-13B
RISK-INFORMED SSC ASSESSMENT WORKSHEET -- SSC(s)
EVALUATED: FEEDWATER FOR PATHWAY
FOR ZINC AND H_2 FLOW TO RPV

Hazards		Potentially Safety Significant	Potentially Low Safety Significant	Not Addressed	Comments
Internal Events	CDF		X		PSA
	LERF		X		PSA
Fire	CDF		X		Fire PSA
	LERF		X		Fire PSA
Seismic	CDF		X		Seismic Margin
	LERF		X		Seismic Margin
"Other" External Events	CDF		X		IPEEE Screening
	LERF		X		IPEEE Screening
Low Power/Shutdown	CDF		X		RMGs
	LERF		X		RMGs
Integral	CDF		X		
	LERF		X		

Table 5.2-14A
RISK-INFORMED SSC ASSESSMENT WORKSHEET

SSC(S) EVALUATED:	Feedwater High Pressure and Low Pressure Heating
SAFETY RELATED:	YES __ NO X
DESIGN BASIS FUNCTION (S) SUPPORTED:	None

SSC(S) EVALUATED:	Feedwater High Pressure and Low Pressure Heating
PRA FUNCTIONS SUPPORTED:	FW Heating
INITIATING EVENT IMPACT	No complicated initiator results from failure of function
SENSITIVITY RESULTS:	No sensitivity analysis required.
DEFENSE IN DEPTH/COMMON CAUSE ASSESSMENT:	None required
INTERNAL EVENTS RISK CONTRIBUTION:	No modeling of these functions in the PRA because the function has been screened out as having a low safety significance for accident initiation or accident mitigation.
OTHER RISK CONTRIBUTIONS:	Seismic, Fire, Shutdown, and "Other" external event evaluations do not indicate potential risk contributions that meet the NEI 00-04 Guideline for safety significant.
INTEGRATED IMPORTANCE IMPACTS	There are no calculated importance measures.
ABOVE SAFETY SIGNIFICANCE THRESHOLD:	YES _ NO X
BASIS FOR RECOMMENDED SSC CATEGORIZATION:	Low assessed safety significance.
SAFETY SIGNIFICANCE ATTRIBUTES:	None

Table 5.2-14B
RISK-INFORMED SSC ASSESSMENT WORKSHEET -- SSC(s)
EVALUATED: FEEDWATER FOR LP AND HP HEATING

Hazards		Potentially Safety Significant	Potentially Low Safety Significant	Not Addressed	Comments
Internal Events	CDF		X		PSA
	LERF		X		PSA
Fire	CDF		X		Fire PSA
	LERF		X		Estimated
Seismic	CDF		X		Seismic Margin
	LERF		X		Seismic Margin
"Other" External Events	CDF		X		IPEEE Screening
	LERF		X		IPEEE Screening
Low Power/Shutdown	CDF		X		RMGs
	LERF		X		RMGs
Integral	CDF		X		
	LERF		X		

Table 5.2-15A
RISK-INFORMED SSC ASSESSMENT WORKSHEET

SSC(S) EVALUATED:	Feedwater Flow Regulation
SAFETY RELATED:	YES __ NO X

SSC(S) EVALUATED:	Feedwater Flow Regulation
DESIGN BASIS FUNCTION (S) SUPPORTED:	None
PRA FUNCTIONS SUPPORTED:	RPV injection
SENSITIVITY STUDY RESULTS:	Sensitivity cases performed resulted in not exceeding NEI 00-04 Guideline for importance.
DEFENSE IN DEPTH/COMMON CAUSE ASSESSMENT:	The FW Regulator uses multiple FW Regulation valves of diverse design. The capability to supply RPV makeup via any of the three FW Regulation Valves is further backed up by the multiple high and low pressure injection systems.
INTERNAL EVENTS RISK CONTRIBUTION:	Importance measures from the internal events PRA show low safety significance when evaluated consistent with NEI 00-04 Guideline and risk metrics. The failure of the FW regulating function will create a complicated initiating event with the FV potentially greater than 0.005
OTHER RISK CONTRIBUTIONS:	Seismic, Fire, Shutdown, and "Other" external event evaluations do not indicate potential risk contributions that meet the NEI 00-04 Guideline for safety significant.
INTEGRATED IMPORTANCE IMPACTS:	The calculated integrated importance measures are below the NEI Guideline, NEI 00-04, for safety significance using the FV and RAW risk metrics.
ABOVE SAFETY SIGNIFICANCE THRESHOLD:	YES X NO _
BASIS FOR RECOMMENDED SSC CATEGORIZATION:	The FW Regulating Valves can be considered to be safety significant based solely on the single criteria of whether a complicated initiating event may result from the complete failure of the function. This criteria may be too stringent, and the IDP should consider system operating history in determining whether this should remain HSS or be downgraded to LSS.
SAFETY SIGNIFICANT ATTRIBUTES:	Controls the RPV injection capability of FW

Table 5.2-15B
RISK-INFORMED SSC ASSESSMENT WORKSHEET SSC(s)
EVALUATED: FEEDWATER FLOW REGULATION

Hazards		Potentially Safety Significant	Potentially Low Safety Significant	Not Addressed	Comments
Internal Events	CDF	X(1)			PSA
	LERF	X(1)			PSA
Fire	CDF		X		Fire PSA
	LERF		X		Fire PSA
Seismic	CDF		X		Seismic Margin
	LERF		X		Seismic Margin
"Other" External Events	CDF		X		IPEEE Screening
	LERF		X		IPEEE Screening
Low Power/Shutdown	CDF		X		RMGs
	LERF		X		RMGs
Integral	CDF		X		
	LERF		X		

(1) The failure of the FW regulating function will create a complicated initiating event with the FV potentially greater than 0.005.

Table 5.2-16A

RISK-INFORMED SSC(s) ASSESSMENT WORKSHEET

SSC(s) EVALUATED:	Feedwater Flood Prevention
SAFETY RELATED:	YES X NO _
DESIGN BASIS FUNCTION SUPPORTED:	Prevent flooding and prevent damage to other critical safety functions.
PRA FUNCTIONS SUPPORTED:	Prevent flooding and prevent damage to other critical safety functions.
INITIATING EVENT IMPACT:	Failure of function does not lead to a complicated initiator, i.e., FV is not > 0.005
SENSITIVITY RESULTS:	No Sensitivity results available based on truncation from the model..
DEFENSE IN DEPTH/COMMON CAUSE ASSESSMENT:	Defense-in-Depth examined and multiple redundant methods available to fulfill the critical safety functions given the failure of the flood prevention function.
INTERNAL EVENTS RISK CONTRIBUTION:	Pipe segments are truncated from the model. Therefore, importance measures from the internal events PRA show low safety significance when evaluated consistent with NEI 00-04 Guideline and risk metrics.
OTHER RISK CONTRIBUTIONS:	Seismic, Fire, Shutdown, and "Other" external event evaluations do not indicate potential risk contributions that meet the NEI 00-04 Guideline for safety significant.
INTEGRATED IMPORTANCE IMPACTS:	The calculated integrated importance measures are below the NEI Guideline, NEI 00-04, for safety significance using the FV and RAW risk metrics.
ABOVE SAFETY SIGNIFICANCE THRESHOLD:	YES _ NO X
BASIS FOR RECOMMENDED SSC	Low assessed safety significance with adequate defense

SSC(s) EVALUATED:	Feedwater Flood Prevention
CATEGORIZATION:	-in-depth.
SAFETY SIGNIFICANCE ATTRIBUTES:	• Maintain Boundary integrity – a passive function

Table 5.2-16B
RISK-INFORMED SSC ASSESSMENT WORKSHEET -- SSC(s)
EVALUATED: FEEDWATER FLOOD PREVENTION

Hazards		Potentially Safety Significant	Potentially Low Safety Significant	Not Addressed	Comments
Internal Events	CDF	X			PSA
	LERF	X			PSA
Fire	CDF		X		Fire PSA
	LERF		X		Estimated
Seismic	CDF		X		Seismic Margin
	LERF		X		Seismic Margin
"Other" External Events	CDF		X		IPEEE Screening
	LERF		X		IPEEE Screening
Low Power/Shutdown	CDF	X(1)			RMGs
	LERF		X		RMGs
Integral	CDF		X		
	LERF		X		

5.3 SUMMARY OF SAFETY SIGNIFICANCE DETERMINATION

Section 5.2 examined each of the functions identified for each of the three pilot systems using a two table format. These 32 tables provide the input to the Integrated Decision-Making Panel (IDP) that summarize the key findings of the categorization process using the NEI guidelines. For convenience, the results of the evaluation are tabulated on a single table, Table 5.3-1 to provide a quick overview of the results.

As such, Table 5.3-1 provides the overall conclusions from the categorization process for each system and each function as input to the IDP.

Table 5.3-1 summarizes the following for each of the three pilot systems:

Functions

Safety Significance Assessment for each of the risk contributors (e.g., internal events fire, seismic, etc.)

Overall Safety Significance recommendation to the IDP based solely on the PRA insights and the guidance from NEI 00-04

Table 5.3-1
SAFETY SIGNIFICANCE SUMMARY BY SYSTEM, FUNCTION, AND ASSESSMENT CHAR

System Component	Function	Assessment Characteristic

		Internal Events PRA[1]	Fire Events PRA	Seismic Margins	Other External Events Screening	Shutdow
Core Spray	RPV Injection	LSS	LSS	LSS	LSS	LSS
	Containment Isolation/RPV Boundary	HSS/LSS	LSS[2]/ LSS	LSS/LSS	LSS/LSS	HSS/HS
	Spray Distribution	LSS	LSS[2]	LSS	LSS	LSS
	Debris Retention	LSS	LSS[2]	LSS	LSS	LSS
	Flood Prevention	LSS	LSS[2]	LSS	LSS	LSS
	Keep-Fill	LSS	LSS[2]	LSS	LSS	LSS
	Containment Flooding	LSS	LSS[2]	LSS	LSS	LSS
SBGTS	Filter Effluent Release	LSS	LSS	LSS	LSS	LSS
	Maintain Negative Pressure in RB	LSS	LSS	LSS	LSS	LSS
	Containment Vent	LSS	LSS	LSS	LSS	LSS

Table 5.3-1
SAFETY SIGNIFICANCE SUMMARY BY SYSTEM, FUNCTION, AND ASSESSMENT CHARACTERISTICS
(CONTINUED)

System Component	Function	Assessment Characteristic				
		Internal Events PRA(1)	Fire Events PRA	Seismic Margins	Other External Events Screening	Shutdow
Feedwater	RPV Make-Up	HSS	LSS	LSS	LSS	LSS
	Containment Isolation/RPV Boundary	HSS/LSS	LSS/LSS	LSS/LSS	LSS/LSS	HSS/HS
	HPCI, RCIC, SSMP, RWCU Flow Paths	HSS	LSS	LSS	LSS	HSS
	Zinc and H_2 Flow Path to RPV	LSS	LSS	LSS	LSS	LSS
	High Pressure FW Heating	LSS	LSS	LSS	LSS	LSS
	Low Pressure FW Heating	LSS	LSS	LSS	LSS	LSS
	FW Flow Regulation	HSS(3)	LSS	LSS	LSS	LSS
	Flood Prevention	LSS	LSS	LSS	LSS	LSS

Legend
HSS = Safety Significant
LSS = Low Safety Significance

Notes to Table 5.3-1:

(1) May include determination based on: (1) PRA importance; or (2) complicated initiating event; or (3) lack of defense-in-depth

(2) The determination of low safety significance is determined by correspondence with the internal events evaluation. The fire risk evaluation did not identify any quantitative impacts on the NEI 00-04 risk metrics associated with this function.

(3) The determination of safety significance for the feedwater flow regulation function is based solely on the single criteria of whether a complicated initiating event may result from the complete failure of the function.

5.4 AGGREGATE IMPACT OF EXERCISING OPTION 2 CHANGES IN SPECIAL TREATMENT

The NEI Guideline (Section 2.4.3.2) specifies that after the IDP categorizes SSCs and the Special Treatment requirements are changed, then a re-evaluation of the risk profile (CDF and LERF) is required. The aggregate calculation of the changes to special treatment identified as part of the examination of the IDP actions (Section 2.4.3.2) includes the following comparison:

> "The second step is to perform sensitivity studies using the available PRAs to evaluate the potential impact on CDF and LERF."

Therefore, as a preview of this calculation and input to the IDP, the following CDF and LERF results are developed and compared with the Reg. Guide 1.174 acceptance guidelines. This re-evaluation results in a "bounding" assessment of the possible change in risk profile, due to changes in the special treatment requirements, as follows:

> "The aggregate impact of the changes should be evaluated to assess whether new risk insights are revealed. Sensitivity studies should be realistic. For example, increasing the unreliability of RISC-3 SSCs by a factor of 2 to 5 could represent a bounding impact on SSC performance. Likewise, reducing the unreliability of RISC-1 and RISC-2 SSCs by a similar factor may be called for, depending upon the specific changes in special treatment. The changes in CDF and LERF computed in such sensitivity studies should be compared to the risk acceptance guidelines of Reg. Guide 1.174 as a measure of their acceptability."

The assessment is performed by imposing increases in unreliability of SSCs subject to relaxation in Special Treatment of factors of 2 to 5. However, it is noted that the specific change in reliability is difficult or impossible to tie directly to changes in Special Treatment. Therefore, the change in reliability is merely a bounding surrogate to represent the Special Treatment changes. Then, the changes in risk measures are compared with the guidelines from Reg. Guide 1.174.

The following are the aggregate calculations performed to assess the change in CDF and LERF by raising the unreliability by factor of 2 (Case A) and 5 (Case B) for low safety significant SSCs as specified in the NEI Guidelines.

It is noted that no reduction in unreliability of feedwater is included in this aggregate calculation. This may be conservative and may add to the bounding nature of the sensitivity.

INTERNAL EVENTS PRA (PER YR)		
	Case A	**Case B**
CDF	4.6141E-6	4.6169E-6
LERF	3.2842E-6	3.2855E-6

This can then be compared with the Base Case PRA to assess the change in CDF and LERF. The Base Case CDF is 4.6137E-6/yr and LERF is 3.2842E-6/yr.

The changes in CDF and LERF are then calculated:

INTERNAL EVENTS PRA (PER YR)		
	Case A	**Case B**
❒ CDF	4E-10	3.2E-9
❒ LERF	0.0	1.3E-9

These CDF and LERF changes are represented graphically on the Reg. Guide 1.174 acceptance guidelines as shown in Figures 5.4-1 and 5.4-2, respectively.

The same process can be undertaken for the Fire PRA results. The following are the results for the Fire PRA:

FIRE PRA (PER YR)

	Case A	**Case B**
CDF	6.463E-5	6.616E-5
LERF	No PRA available	No PRA available

This can be compared with the Base Case Fire PRA CDF of 6.4128E-5/yr to assess the change in CDF due to the assumed changes in unreliability for the low safety significant SSCs.

The changes in CDF are then calculated:

FIRE PRA (PER YR)		
	Case A	**Case B**
❒ CDF	5.02E-7	2.03E-6

These changes in CDF are represented graphically on the Reg. Guide 1.174 acceptance guidelines as shown on Figure 5.4-3.

Figure 5.4-1

COMPARISON OF CHANGES IN THE INTERNAL EVENTS CALCULATED CDF WITH THE ACCEPTANCE GUIDELINES FOR CDF (FROM RG 1.174)

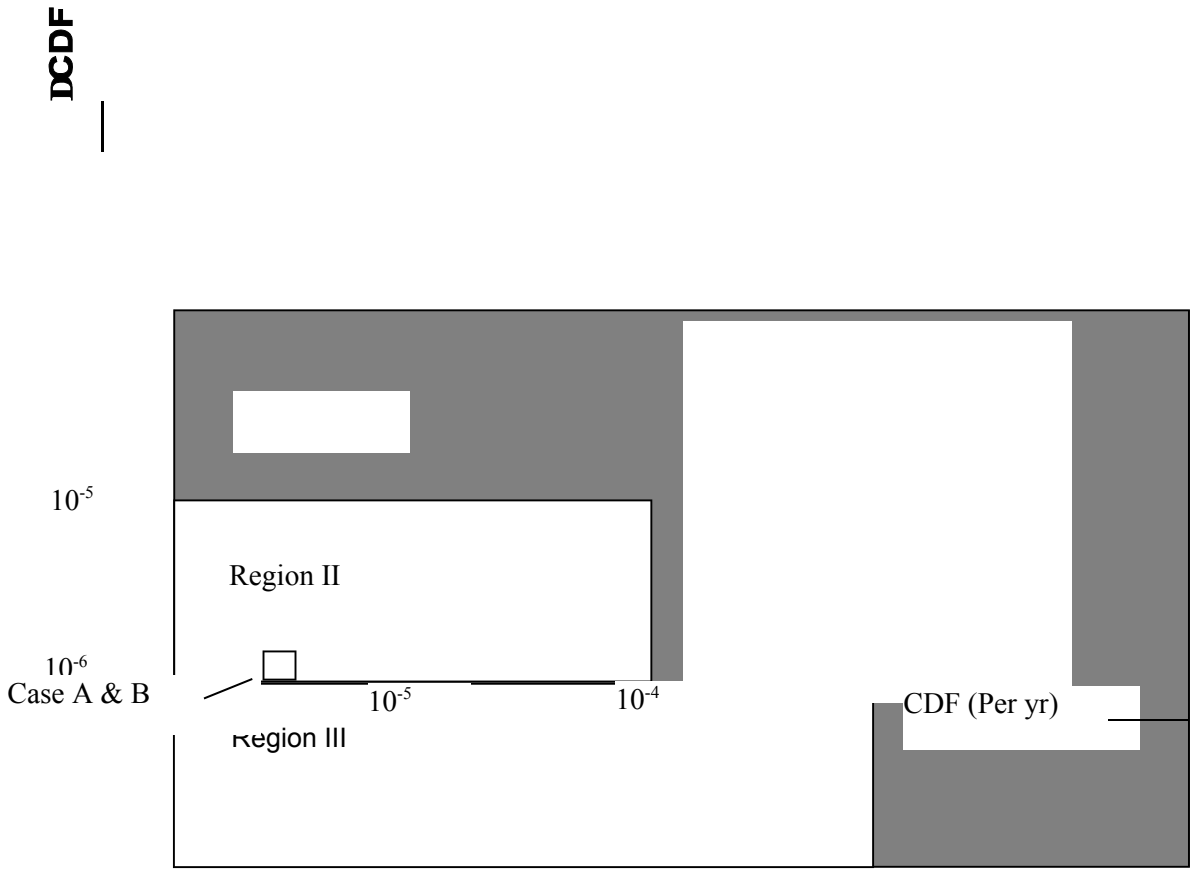

Figure 5.4-2

COMPARISON OF CHANGES IN THE INTERNAL EVENTS CALCULATED LERF WITH THE ACCEPTANCE GUIDELINES FOR LERF (FROM RG 1.174)

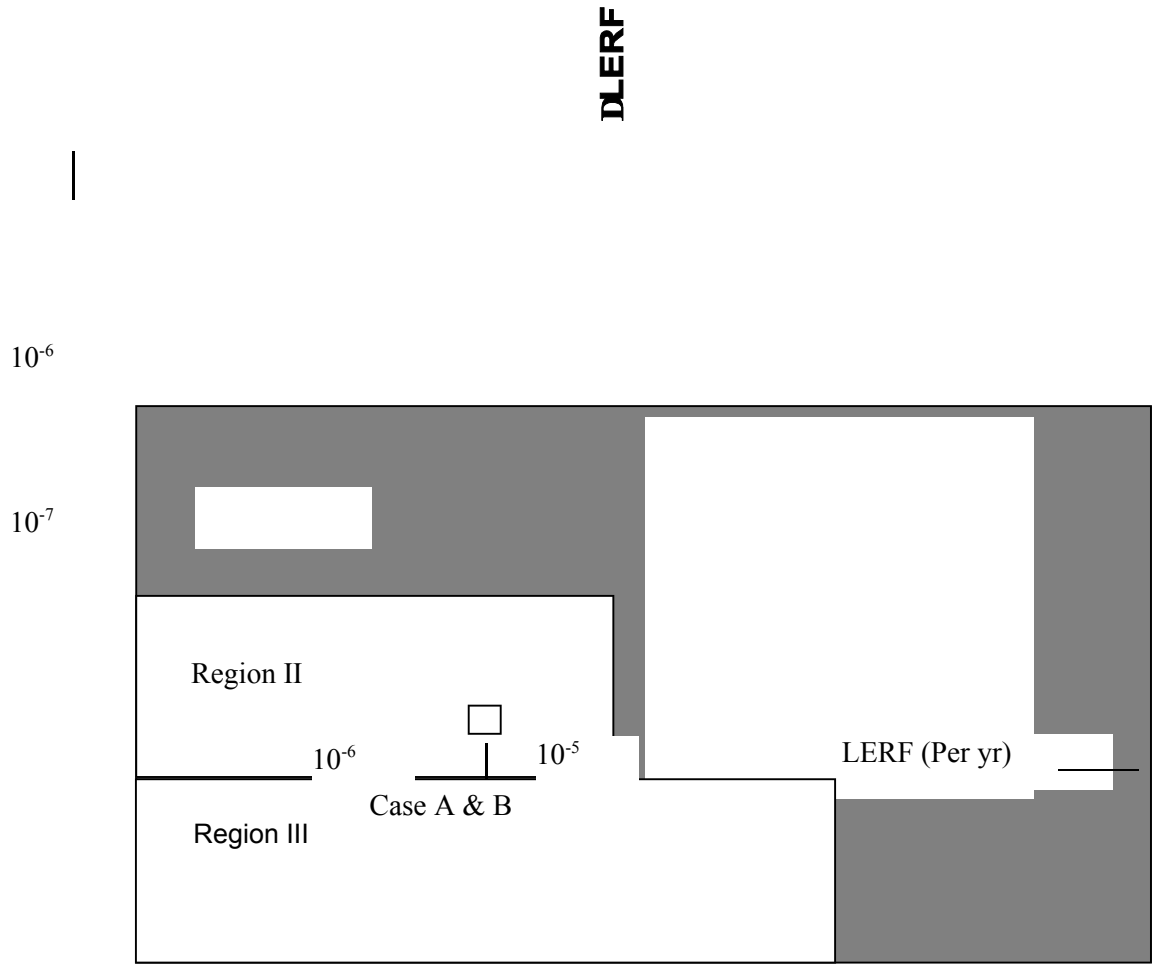

DCDF

Figure 5.4-3

COMPARISON OF CHANGES IN THE FIRE EVENTS PRA CALCULATION OF CDF WITH THE ACCEPTANCE GUIDELINES FOR CDF (FROM RG 1.174)

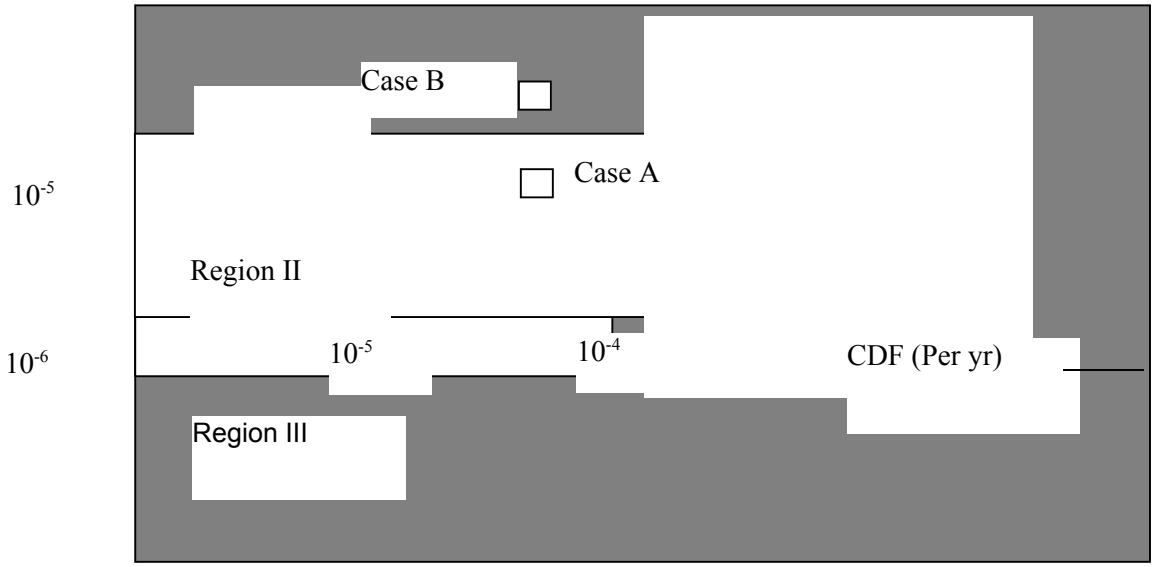

6. SPECIAL TREATMENT OPTIONS AND ASSOCIATED IMPACT

6.1 DISCUSSION

Other sections of this report have classified the pilot systems trains and components by Safety Significance and discussed the individual risk contribution results. This section discusses which special treatment regulations provide good candidates for exemptions and discusses the potential impact if exemptions are approved for these requirements.

Special treatment regulations identified in SECY-99-256 (Ref 6) and NEI Draft Guidelines (Ref 1) have been classified into three distinct categories. These include:

Regulations not addressed in the Pilot Evaluation	• 10 CFR 50.2 • 10 CFR 50.34 • 10 CFR 50.44 • 10 CFR 50.55 • 10 CRF 50.48 • 10 CFR 50.71 • 10 CFR 52 • 10 CFR 50, Appendix A • 10 CFR 50, Appendix S	• Definitions • Contents of applications; technical information • Standards for Combustible Gas Control System in Light-water-cooled power reactors • Conditions of Construction Permits • Fire Protection" and 10 CFR 50, Appendix R, "Fire Protection Program for Nuclear Power Facilities Operating prior to January 1, 1979 • Maintenance of Records, Making of Reports – (UFSAR Updates) • Early Site Permits; Standard Design

		Certifications; and combined licenses for Nuclear Power Plants • General Design Criteria for Nuclear Power Plants” • Earthquake Engineering Criteria for Nuclear Power Plants”

Administrative Control Regulations	• 10 CFR 21 • 10 CFR 50.59 • 10 CFR 50.72 • 10 CFR 50.73 • 10 CFR 50.54 and Appendix B	• Reporting of Defects and Noncompliance • Changes, Tests and Experiments • Immediate notification requirements for operating nuclear power reactors • Licensee Event Report System • Quality Assurance Criteria For Nuclear Power Plants and Fuel Reprocessing Plants
Technical Performance Regulations	• 10 CFR 50.36 • 10 CFR 50.49 • 10 CFR 50.55a • 10 CFR 50, Appendix J	• Technical Specifications • Environmental Qualification of electric equipment important to safety for nuclear power plants • Codes and Standards • Primary Reactor Containment Leakage Testing for Water Cooled Power Reactors

	• 10 CFR 50.65 • 10 CFR 100	• Requirements for monitoring the effectiveness of maintenance at nuclear power plants" (Maintenance Rule) • Reactor Site Criteria

Each of these items will be discussed in greater detail in the following sections.

A detailed NRC submittal is required committing to the process described in NEI 00-04 and describing changes in plant implementation of the special treatment regulations as applicable to the pilot systems. This NRC submittal would commit to implementing 10 CFR 50.69.

6.2 EXEMPTIONS TO SPECIAL TREATMENT REGULATIONS

6.2.1 Regulations Not Addressed in the Pilot Evaluation

Some of the special treatment regulations deal with areas that are not applicable to the pilot systems. These include:

- Regulations which have no impact on the pilot systems
- Regulations which are addressed in other programs

6.2.1.1 Regulations Which Have No Impact on the Pilot Systems

1. 10 CFR 50.2 – Definitions

Discussion: This section provides definitions for terms used in Section 10 CFR 50. This section is primarily administrative in nature and is therefore not a candidate for Risk Informed Evaluations.

2. 10 CFR 50.44 – "Standards for Combustible Gas Control System in Light-water-cooled power reactors"

Discussion: This section addresses the requirements for systems used to control the Hydrogen generation which occurs following a postulated Loss of Coolant Accident (LOCA). This regulation is not applicable to the Core Spray, Standby Gas Treatment System or Feedwater System.

3. 10 CFR 50.55 – "Conditions of Construction Permits"

Discussion: This provides the terms and conditions for initial construction permits. As this is primarily for new plant construction, it would not be applicable for the pilot plants.

4. 10 CFR 52 - "Early Site Permits; Standard Design Certifications; and combined licenses for Nuclear Power Plants"

Discussion: This regulation addresses the issuance of early site permits, standard design certifications and combined licenses for Nuclear Facilities. This regulation is primarily directed to the licensing of new plants and is therefore not a candidate for Risk Informed Evaluations.

6.2.1.2 Regulations which are addressed in other programs

1. 10 CFR 50.36 – "Technical Specifications"

Discussion: This regulation requires that the Licensee issues and maintains a set of Technical Specifications that define the conditions for operability consistent with the licensing basis. Other industry-wide programs are addressing improved technical specifications including the potential for moving some SSCs currently in the scope of Technical Specifications to the site controlled Technical Requirements Manual.

The removal of LSS SSCs from Technical Specifications will have little or no impact on overall risk to the public. This conclusion is based on the screening performed as part of the Option 2 categorization process that identifies components as having low safety significance. Based on the categorization process, certain surveillance tests can be moved into the Technical Requirements Manual or can be completely removed (e.g. SGTS). This would result in cost savings in reduced LER's and manpower expediture for performing and reviewing the surveillance tests.

The functionality of the LSS SSCs would be verified during required testing of system, normal operations (e.g. operating SGTS to verify Secondary Containment) or at a frequency identified in the Industrial Program.

NEI 00-04 should clarify the relationship between the special treatment program and the Risk Informed Technical Specification activities.

2. 10 CRF 50.48 – "Fire Protection" and 10 CFR 50, Appendix R, "Fire Protection Program for Nuclear Power Facilities Operating prior to January 1, 1979"

Discussion: This section addresses the requirements for the Station's Fire Protection Program. This is a stand-alone program and therefore exempt from this evaluation. A

separate BWROG committee is addressing Appendix R issues. However, it should be noted that none of the systems in this pilot study have high safety significance in the fire events PRA (see Table 5.3-1).

3. Appendix A to part 50 of 10 CFR – "General Design Criteria for Nuclear Power Plants"

Discussion: This Appendix addresses the minimum design criteria that must be applied to structures, systems and components important to safety. This regulation is primarily directed to the design of SSCs and is therefore not a candidate for Risk Informed Evaluations. However, it may be addressed in the Option 3 activity.

4. Appendix S to part 50 of 10 CFR – "Earthquake Engineering Criteria for Nuclear Power Plants"

Discussion: This Appendix provides criteria to design structures systems and components important to safety to withstand the effects of an earthquake. This regulation is primarily directed to the design of SSCs and is therefore not a candidate for Risk Informed Evaluations. However, it may be addressed in the Option 3 activity.

5. 10 CFR 50.34, "Contents of applications; technical information"

Discussion: This section identifies the site information that must be provided for the UFSAR including post TMI requirements. This section implements the requirements of 10 CFR 100. This section is primarily focused on providing information in support of the licensing process and is therefore not a candidate for Risk Informed Evaluations.

6. 10 CFR 50.71 – Maintenance of Records, Making of Reports – (UFSAR Updates)

Discussion: This provides requirements for submitting routine reports to the NRC. As this requirement deals with general administration, it would not be a good candidate for Risk

Significant Evaluation. However, 10 CFR 50.69 may require updates to include RISC 2 SSC designations.

6.2.2 Administrative Control Regulations

1. 10 CFR 21 – "Reporting of Defects and Noncompliance"

Discussion: This requirement establishes procedures and requirements for notification of the NRC should a component, activity or facility fails to conform to regulations or contain defects that could create a substantial safety hazard.

Components classified as P, S, A or I safety class (see Appendix A) with low safety significance or N with high safety significance

The number of components which meet this criteria are:

	RISC 3	RISC 2
Core Spray	27	0
Feedwater	2	15
SBGTS	44	0

Components potentially affected:	
Estimate of Safety Significance:	Part 21 is primarily an administrative requirement, requiring a report to be generated, when a defect or failure in a SSC results in a substantial safety hazard. The screening performed as part of the Risk-Informed program would allow changes for components that have been evaluated as having low safety significance. Therefore, failure to report defects for these SSCs will have little or no impact on the overall risk to the public.
Potential Impact:	This exemption would effectively remove low safety significant SSCs (RISC 3) from the scope of 10 CFR Part 21 and, for the exempted SSCs, would eliminate the requirement for the licensee to invoke 10 CFR Part 21 through procurement documents (10 CFR 21.31), the requirement for dedication of commercial grade items (10 CFR 21.3) and the requirement for reportability evaluations of deviations in component critical characteristics or other reportable defects (10 CFR 21.21). There is a possibility that RISC 2 category equipment would need to have the same report-ability requirements when the defect affects it's ability to perform it's mitigation function and resulting in a substantial safety risk. This increase in reporting could negate the savings cause by the change. In SECY 00-0194, the NRC said that they were looking into this. (Ref 5) NEI 00-04 should exclude low safety significant (LSS) SSCs from the scope of the definition of "basic component" as defined in 10 CFR 21.3. This exemption would effectively remove LSS SSCs

from the scope of 10 CFR Part 21 and associated report-ability evaluations of deviations in component critical characteristics or other reportable defects (10 CFR 21.21). For exempted SSCs, this would also eliminate the requirement for Exelon to invoke 10 CFR Part 21 through procurement documents (10 CFR 21.31), the requirement for dedication of commercial grade items (10 CFR 21.3). This could increase the available suppliers for RISC3 components and result in cost savings. Because for the pilot systems, such evaluations are rare, at present there is little benefit of this exemption for the pilot system.

2. 10 CFR 50.54 – "Conditions of Licenses" and Appendix B "Quality Assurance Criteria For Nuclear Power Plants and Fuel Reprocessing Plants"

Discussion: This section provides various generic requirements imposed on each licensee. These requirements are mostly of an administrative nature (e.g., Shift staffing, Description of QA Program, Notification of changes to SAR etc.) and may have potential for exemption in certain areas.

Appendix B requires that the safety-related Structures, Systems and Components (SSC), be included in the plants Quality Assurance Program. These quality assurance requirements are then applied to specific activities relating to these SSCs including designing, purchasing, fabricating, handling, shipping, storing, cleaning, erecting, installing, inspecting, testing, operating, maintaining, repairing, refueling and modifying.

Component affected:	Components classified as P, S, A or I safety class (see Appendix A) with low safety significance or N with high safety significance. The number of components which meet this criteria are:

	RISC 3	RISC 2
Core Spray	27	0
Feedwater	2	15
SBGTS	44	0

Estimate of Safety Significance: As part of the risk assessment process, only those components with low safety significance would be exempted from this program. Therefore, even if exclusion from the special process requirements were to adversely affect the function or reliability of an exempted SSC, the sensitivity evaluation included in the categorization process provides confidence that there would be no significant increase in risk to the health and safety of the public.

Potential Impact: NEI 00-04 should exclude LSS SSCs from the scope of the requirements of all of the criteria of Appendix B to 10 CFR Part 50, and commit to the implementation of an Industrial Program. Design engineering practices at Quad Cities would not be impacted since a single program is applied to all engineering processes. LSS SSCs also would be excluded from the scope of SSCs important to safety under the requirements of GDC 1, Quality Standards and Records" for LSS SSCs.

Some benefit would be derived in procurement of equipment if the LSS SSCs at Quad Cities were to use SQAD 3 documentation rather than SQAD 1.

There is a possibility that additional performance requirements for RISC 2 category equipment would be required. Although Appendix B safety grade design requirements would not be required, some additional engineering to justify that the

equipment will perform as designed may be needed as part of the Industrial Program implementation.

3. 10 CFR 50.59 – "Changes, Tests and Experiments"

Discussion: This regulation requires evaluations to be performed to determine if changes, test or experiments involving the facility result in an un-reviewed safety question.

Component affected: Components classified as P, S, A or I safety class (see Appendix A) with low Safety Significance or N with high safety significance. The number of components which meet this criteria are:

	RISC 3	RISC 2
Core Spray	27	0
Feedwater	2	15
SBGTS	44	0

Estimate of Safety Significance: The 50.59 process provides a systematic and rigorous evaluation of all changes, tests and experiments prior to their implementation to establish if the change remains within the analyzed licensing basis of the plant. Since Quad Cities applies this regulation to all changes independent of safety classification, there is no impact on plant safety.

Potential Impact: Exempting low safety significant equipment from this requirement could lessen or simplify the administrative burden of the evaluations for RISC3 SSCs and save cost.

There is a possibility that additional evaluation of RISC 2 category equipment would be required. The evaluation would

need to address how the proposed change affects the ability to perform it's safety significant function (reliability, availability and capability) and whether that poses a increase in (consequences) risk or categorization.
NEI 00-04 should define that LSS SSCs are not subject to a written evaluation of changes and that the Industrial Program would assure that the safety related functions are maintained.

4. 10 CFR 50.72 – "Immediate notification requirements for operating nuclear power reactors"

Discussion: This section provides the requirements for rapid (i.e. between 1 and 4 hours depending on nature of event) NRC notification.

Component affected: Components classified as P, S, A or I safety class (see Appendix A) with low Safety Significance or N with high safety significance.

The number of components which meet this criteria are:

	RISC 3	RISC 2
Core Spray	27	0
Feedwater	2	15
SBGTS	44	0

Estimate of Safety Significance: The 50.72 reporting process provides a systematic notification of events or conditions occurring in the Plant. As only those components that have been identified as being of low Safety Significance will be exempted from this requirement, there is minimal change to the overall risk to the public. Increasing the

Potential Impact:	reporting of safety significant items does not by itself impact risk. Exempting low safety significant equipment from this requirement would lessen or simplify the administrative burden and save cost. There is a possibility that reporting of RISC 2 category equipment malfunctions would be required. The report would need to include a discussion of how the change affects the ability to perform it's mitigation function (reliability, availability and capability) and whether that poses a increase in (consequences) risk. NEI 00-04 should clarify the reporting requirements applied to RISC 3 and RISC SSCs.

5. CFR 50.73 – "Licensee Event Report System"

Discussion: Requires licensees submit written reports under certain defined conditions or events.

Component Potentially affected:

Components classified as P, S, A or I safety class (see Appendix A) with low safety significance or N with high safety significance.

The number of components which meet this criteria are:

	RISC 3	RISC 2
Core Spray	27	0
Feedwater	2	15
SBGTS	44	0

Estimate of Safety Significance:

This requirement is administrative, requiring reports to be generated, when certain events or conditions occur. The screening performed as part of the Risk-Informed program would only allow changes for components that have been evaluated as

Potential Impact:	having low safety significance. Therefore, removal of these LSS SSCs will have little or no impact on the overall risk to the public. Exempting low safety significant equipment (RISC 3) from this requirement would lessen the administrative burden and save cost. There is a possibility that additional evaluations for RISC 2 category equipment could be required. The evaluation would include an assessment of how the event affects the ability to perform it's mitigation function (reliability, availability and capability) and whether that poses a increase in (consequences) risk. NEI 00-04 should clarify the reporting requirements applied to RISC3 and RISC2 SSCs.

6.2.3 Technical Performance Regulations

1. 10 CFR 50.49 – "Environmental Qualification of electric equipment important to safety for nuclear power plants"

Discussion: This regulation provides requirements to insure that electrical equipment required for safety is capable of performing under the expected environmental conditions expected.

Component affected: Components with EQ Class 1, 2, or 3 (see Appendix A) with low Safety Significance or N or 4 with high safety significance. The following numbers of components meet this criteria:

	RISC 3	RISC 2
Core Spray	6	3
Feedwater	0	18
SBGTS	5	0

Estimate of Safety Significance: The evaluation and categorization process will only permit exclusion of those components that have low safety significance. Therefore, even if exemption from the special process requirements were to adversely affect the function or reliability of an exempted SSC, the categorization process provides confidence that there would be no significant increase in risk to the health and safety of the public.

Potential Impact:	By exempting equipment with low safety significance, there will be some reduction in cost during procurement and maintenance activities. At Quad Cities, this would result in application of reduced quality documentation and consequently lower prices from vendors. There is a possibility that additional requirements (augmented quality) would be required to demonstrate functionality for RISC 2 category equipment. Although current EQ requirements would not be required, some additional engineering and possibly testing may be needed to show that the equipment will perform under conditions identified in the PRA. RISC 2 components will be addressed in the Industrial Program. NEI 00-04 should remove the testing and documentation requirements associated with Environmental Qualification Programs from equipment that has been screened to be LSS. Comparing the manufacturers stated capability with the design environmental requirements, and then evaluating the differences would assure functionality in the design basis environment. The Industrial Program would need to be formalized to support this as defined in NEI 00-04.

3. 10 CFR 50.55a – "Codes and Standards"

Discussion: provides the requirement for SSC's required for safety to conform to industry Codes and Standards (as modified by NRC regulatory guides).

Component affected: Components classified as ASME A, B or C or Electrical (IEEE) E (see Appendix A) with low safety significance or components classified N with high safety significance. The following components meet this criteria:

	RISC 3	RISC 2
Core Spray	23	2
Feedwater	2	15
SBGTS	12	0

Estimate of Safety Significance: Only those components, which have already been evaluated as having low Safety Significance, would be candidates for exclusion. Therefore, even if exclusion from the special process requirements were to adversely affect the function or reliability of an exempted SSC, the categorization process provides confidence that there would be no significant increase in risk to the health and safety of the public.

Potential Impact: By excluding equipment with low Safety Significance, there will be some reduction in cost due to decreased testing and documentation requirements.

NEI 00-04 should specify that LSS components are exempt from the requirements of Section XI of the American Society of Mechanical Engineers (ASME) Boiler and Pressure Vessel Code (the Code), for repair and replacement of safety-related LSS SSCs

required under 10 CFR 50.55a(f) and (g). The technical requirements of replacement SSCs related to material specifications, loadings, design methodology, and stress allowables would remain consistent with the original SSC technical requirements. Replacement safety-related LSS SSCs could specify that they be fabricated or manufactured to the requirements of an alternative nationally recognized code, standard, or specification appropriate for that type of SSC.

Included within the scope of NEI 00-04 should be exemptions from 10 CFR 50.55a(f) and 10 CFR 50.55a(g), the IST and ISI requirements for safety-related LSS SSCs. Installation and examination of LSS replacement SSCs could be performed in accordance with American National Standards Institute (ANSI) B31.1, "Power Piping." Post-installation testing would be performed in accordance with Section XI of the ASME Code and the requirements of the work package.

For electric SSCs important to safety, NEI 00-04 should establish an exemption from 10 CFR 50.55a(h) to exclude LSS SSCs from the scope of SSCs required to meet Sections 4.3 and 4.4 of Institute of Electrical and Electronics Engineers (IEEE) 279, "Criteria for Protection Systems for Nuclear Power Generating Stations". This would allow exclusion of these SSCs from the scope of the quality and environmental qualification requirements described in those sections.

Quad Cities has implemented a Risk-Informed ISI program on Class 1 piping. This program has significantly reduced outage

related ISI activities. NEI 00-04 should include reference to this program or equivalent.

4. 10 CFR 50.65 – "Requirements for monitoring the effectiveness of maintenance at nuclear power plants" (Maintenance Rule).

Discussion: The Maintenance Rule imposes requirements for monitoring the performance of SSCs in a manner sufficient to provide confidence that the SSCs are capable of fulfilling their intended functions. Included within the scope of 10 CFR 50.65(b) are SSCs such as safety-related and non-safety-related SSCs that are either relied upon to remain functional during design-basis events, relied upon in emergency operating procedures, or whose failure could result in the failure of a safety function.

Component affected:	A specific list of components for each system that are currently in the Maintenance Rule Program at Quad Cities is not available. The systems are evaluated at the train and system level.
Estimate of Safety Significance:	Due to the nature of the monitoring process inherent in the Maintenance Rule Program, trains and systems are being continuously evaluated . Only components with low safety significance would be excuded from the Maintance Rule. The classification process provides confidence that there is minimal impact on the overall risk to the public.
Potential Impact:	A DELPHI process is used at Quad Cities to establish the importance of system functions included in the database. Although based on the review of the expert panel, the categorization could provide the basis for redefining the significance of some functions.

Based on the categorization, LSS components testing and maintenance may be replaced with less monitoring requirements and possibly fewer inspections as defined in the Industrial Program. RISC 2 components are already included in the Maintenance Rule program. Therefore, there may be no impact for these components. There is the possibility that some HSS beyond design basis functions would need to be added to the scope of the Maintenance Rule.

NEI 00-04 should clarify the scope of the Maintenance Rule with regard to HSS SSCs and exclude LSS SSCs from the scope of the Maintenance Rule defined in 10 CFR 60.65(B). The Industrial Program would conduct monitoring at the plant, system, or train level.

5. 10 CFR 100 – "Reactor Site Criteria"

Discussion: The requirements of 10 CFR Part 100 pertain to reactor site criteria and its Appendix A addresses seismic and geologic siting criteria. Sections VI(a)(1) and (2) of 10 CFR Part 100, Appendix A, address the engineering design for the Safe Shutdown Earthquake (SSE) and Operating Basis Earthquake (OBE), respectively.

Component affected:	Components classified as seismic I, Q or S (see Appendix A) with low safety significance or seismic N with high safety significance. The following components meet this criteria:

	RISC 3	RISC 2
Core Spray	40	0
Feedwater	08	14
SBGTS	62	0

Estimate of Safety Significance:	The programmatic requirement that components retain their functionality under all design conditions makes the likelihood that this exemption will have any safety significance extremely unlikely.
Potential Impact:	Certain components (RISC 3) can be shown to have low safety significance under seismic conditions and may realize cost savings in procurement and possibly the hanger, snubber inspection programs. NEI 00-04 should exclude safety-related SSCs classified as LSS from the requirements of Sections VI(a)(1) and (2) of 10 CFR Part 100, Appendix A. The Industrial Program would need to include a seismic function assessment as discussed in NEI 00-04.

6. Appendix J to 10 CFR 50 – "Primary Reactor Containment Leakage Testing for Water Cooled Power Reactors"

Discussion: provides testing requirements for periodic verification of leak tightness of the primary reactor containment and those systems that penetrate the primary containment.

Component affected:	Containment isolation valves with low Safety Significance (see Appendix A components with a Containment Isolation function). None of the pilot system isolation valves were evaluated as having low safety significance:

Estimate of Safety Significance:	Based on the requirements that only those components which have little or no impact on the short and long term containment integrity could be included in this program, exempting these components will have little or no effect on the change in risk to the general public.
Potential Impact:	By excluding valves with low safety significance from the scope of this requirement, there will be reduction in cost due to decreased testing, outage schedule reduction and documentation requirements. However, it is doubtful that any containment isolation valves would be classified as RISC 3. NEI 00-04 should exclude safety-related LSS SSCs from the scope of SSCs requiring Type C containment isolation valve leak rate tests (10 CFR Part 50, Appendix J, Option B, III.B, "Type B and C Tests"). It would propose that the Industrial Program could specify leakage requirements, but testing would not be required.

7. CONCLUSIONS AND RECOMMENDATIONS

Three systems, Core Spray, Feedwater and Standby Gas Treatment, were evaluated using the NEI Risk-Informed Categorization and Treatment assessment methodology. The following conclusions are drawn from this pilot assessment:

1. The Core Spray system is shown to be of mostly low safety significance based on internal event analysis. However, the Core Spray injection valves which serve the pressure and containment isolation function were shown to be of high safety significance.
2. The Standby Gas Treatment system is shown to be of low safety significance for all events.
3. The Feedwater system is shown to be of high safety significance based on internal event analysis.
4. No system was shown to be of high safety significance based on Fussell-Vesely risk measures alone. Risk Achievement Worth data were used to justify the categorizations.
5. Several of the regulations that are candidates for special treatment relaxation are being addressed by other Industry Programs. These are not being addressed by this pilot evaluation,
6. The numbers of potential RISC 3 components appears to outnumber the number of potential RISC 2 components by a significant degree. However, justifications for exclusion from specific regulations have not been accomplished at this time. The final assessment of program savings will depend on a detailed evaluation of the impact on the various programs in place at the pilot plant.
7. Cost estimates of the current impact of the special treatment regulations is difficult to obtain due to the utility accounting practices which do not isolate such information.

8. Significant ongoing discussion between NRC, NEI and the industry leave the application of the Special Treatment regulations to RISC 3 as well as potential RISC 2 components highly uncertain at this time. Revision of NEI 00-04 based on the pilot plant observations would assist in the finalization and issuance of 10CFR50.69.

9. As part of the pilot program, the NEI Option 2 Implementation Guidelines (Ref. 1) were exercised. The conclusions of the pilot study relative to the NEI Option 2 Implementation Guidelines are as follows:

   - NEI 00-04 provides a viable approach to Option Risk Informed Regulation.
   - Some refinements to the guidelines could be useful to clarify the quantification approaches.
   - Stringent requirements on importance measures may limit applicability of systems.

10. The Option 2 Implementation Guidelines (NEI 00-04) have been used for three systems at Quad Cities. The Option 2 approach and process results in the categorization of SSCs within the plant as Low Safety Significance (LSS) and High Safety Significance (HSS) according to a formal accepted process. The following conclusions can be reached from this analysis:

    - The process is easily understood and is judged to be valuable for SSC safety categorization.
    - The process success for utilities appears to demand that a phased approach be allowed to avoid expending huge resources at one time.
    - The results of the process establishes a strong technical bases for representing the safety significance of SSCs. This technical bases could be useful in future interactions both on-site (e.g., IDP, PORC) and with the regulator, e.g., NRC.

8. REFERENCES

1. Nuclear Energy Institute (NEI), "Option 2 Implementation Guideline", NEI 00-04. Draft, Revision A2, December, 2000.

2. Boiling Water Reactor Owners Group (BWROG), "BWR Survey – Option 2", C102004.040-4273.

3. Nuclear Regulatory Commission (NRC), Letter to NEI, "Initial Observations on Proposed Risk-Informed Part 50 Option 2 Categorization Guideline (TAC No. MA8584)", September 26, 2000.

4. Commonwealth Edison, "Quad Cities – Updated Final Safety Analysis Report (UFSAR)", Chapter 15, Accident and Transient Analysis, Revision 4, April 1997.

5. SECY-00-0194, "Risk-Informing Special Treatment Requirements", dated September 7, 2000.

6. SECY-99-256, "Rulemaking Plan For Risk-Informing Special Treatment Requirements", dated October 29, 1999.

7. Draft Safety Evaluation By the Office Of Nuclear Reactor Regulation, "Risk-Informed Exemptions From Special Treatment Requirements STP Nuclear Operating Company South Texas Project Electric Generating Station, Units 1 and 2", Docket Nos. 50-498 and 50-499, Dated November 8, 2000.

8. NEI Letter to USNRC, "Advance Notice of Proposed Rulemaking on Risk-Informed Special Treatment Requirements, (65 Fed. Reg. 11488, March 3, 2000)" Dated May 17, 2000.

9. NEI Draft Guidelines, "Risk Informed Regulation, 10 CFR Part 21" dated June 29, 2000.

10. Initiating Events Notebook, QCPSA-001, Rev. 1, 10/18/99.

11. Core Spray System Notebook, QCPSA-005.13, 2/23/99.

12. Residual Heat Removal System and Residual Heat Removal Service Water System (RHR and RHRSW) Notebook, QCPSA-005.11, 4/28/00.

13. Quad Cities PSA Peer Review Certification Report, BWROG/PSA 99-02, February, 2000

14. Quad Cities PRA, 1998.

15. Commonwealth Edison, Quad Cities Individual Plant Examination of External Events Submittal Report, Docket No. 50-254 and 50-265, dated February 13, 1997.

16. Quad Cities Fire PRA.

17. Generic Letter 88-20, Supplement 4, "Individual Plant Examination of External Events for Severe Accident Vulnerabilities – 10CFR50.54(f)," United States Nuclear Regulatory Commission, June 28, 1991.

18. NUREG-1407, "Procedural and Submittal Guidance for the Individual Plant Examination of External Events (IPEEE) for Severe Accident Vulnerabilities," United States Nuclear Regulatory Commission, June 1991.

19. Personal Communication P.D. Knecht (GE) to Jan Grobbelaar (ERIN), December 5, 2000.

20. SECY-98-300, "Options for Risk-Informed Revisions to 10CFR Part 50 - Domestic Licensing of Production and Utilization Facilities", dated December 23, 1998.

21. D.E. True, et al., "PSA Applications Guide", EPRI TR-105396, August 1995.

22. PRA Peer Review Guidelines, NEI 00-02 (DRAFT), April 2000.

23. Quad Cities Station, "Individual Plant Examination of External Events Submittal Report", Com Ed, February 13, 1997.

24. J.P. Poloski, D.G. Marksberry, C.L. Atwood, W.J. Galyean, "Rates of Initiating Events at U.S. Commercial Nuclear Power Plants 1987-1995", NUREG/CR-5750 (INEEL/EXT-98-00401), February 1999.

25. ComEd Risk Informed Inservice Inspection Evaluation, Quad Cities Nuclear Power Plants Units 1 and 2, 51349918-1349, February 2001.

26. M.T. Drouin, et al., "Analysis of Core Damage Frequency: Internal Events Methodology", NUREG/CR-4550, Vol.1, Rev.1, January 1990.

27. S.A. Eide, et al., "Generic Component Failure Data Base for Light Water and Liquid Sodium Reactor PRAs", EGG-SSRE-8875, February, 1990.

28. ASME PRA Standard Draft No. 10.

29. General Electric Standard Safety Analysis Report (GESSAR)

30. Regulatory Guide 1.174, "An Approach for Using Probabilistic Risk Assessment in Risk-Informed Decisions on Plant-Specific Changes to the Licensing Basis," July 1998.

31. "Addressing PRA Quality in Risk-Informed Activities," SECY-00-0162, July 28, 2000.

32. A. Mosleh/University of Maryland, et al., "Guidelines on Modeling Common-Cause Failures in Probabilistic Risk Assessment", NUREG/CR-5485, November 1998.

33. F.M. Marshall/INEEL, D.M. Rasmuson/NRC, A. Mosleh/Univ. of Maryland, "Common-Cause Failure Parameter Estimations", NUREG/CR-5497, October 1998.

34. A.D. Swain, H.E. Guttmann, "Handbook of Human Reliability Analysis with Emphasis on Nuclear Power Plant Applications", NUREG/CR-1278, August 1983.

35. White Paper on Fuel Oxidation for EPG Issue 9921, May 31, 2001, OG00-0170-062.

36. GE Position Summary: Long-Term Post-LOCA Adequate Core Cooling Requirements, DRF-E22-00135-01, November 2000, GE Proprietary Information.

37. "Shoreham Nuclear Power Station Probabilistic Risk Assessment", Long Island Lighting Company, Docket File 50-322, June 1983.

38. BWROG PRA Certification Process Results

39. W.L. Ferrell, A.C. Payne, Jr., and S.L. Daniel, "Analysis of the LaSalle Unit 2 Nuclear Power Plant: Risk Methods Integration and Evaluation Program (RMIEP), Internal Flood Analysis, " NUREG/CR-4832 ((SAND92-0537), Vol. 10, October 1992.

40. U.S. Nuclear Regulatory Commission, "Severe Accident Risks: An Assessment for Five U.S. Nuclear Power Plants", NUREG-1150, December 1990.

41. "Limerick Probabilistic Risk Assessment", Philadelphia Electric Company, Docket Files 50-532, 50-533, March 1981.

(1) Using RHR estimate to represent CS

(2) Pipe Rupture Frequency = 5.5E-9/ft-yr and estimate 100 ft of FW pipe inside containment

(1) Refer to the train and system level importance measures.

(2) The RPV injection valves for the purpose of opening and supplying RPV injection are found to be of low safety significance. For additional information regarding the injection valves, the treatment of the containment isolation function is required to be included. The function of the valves for that function is to remain closed.

(1) If ISLOCA is considered as a separate CDF contributor, the RAW for this class of challenge can be calculated separately.

(1) The calculation for the large LOCA frequency uses the pipe rupture frequency = 5.6E-9/ft-yr and an estimate of 200 ft of feedwater pipe inside containment.

(1) Applies to both (1) CS injection valves and (2) RPV boundary.

(1) Keep fill is a system that operates prior to accident challenges. Failures of the keep fill can be fixed prior to any initiating event.

(1) Not a contributor to CDF or LERF in the PRA.

(1) Not a contributor to CDF or LERF in the PRA.