Mail Envelope Properties (3B570BF1.980 : 23 : 27008)

Subject: DRAFT RAI response
Creation Date: 7/19/01 12:33PM
From: <jboatwright@txu.com>

Created By: jboatwright@txu.com

Recipients
nrc.gov
owf4_po.OWFN_DO
DHJ (David Jaffe)

txu.com
jseawright

Post Office	**Route**
owf4_po.OWFN_DO	nrc.gov
	txu.com

Files	**Size**	**Date & Time**
MESSAGE	373	07/19/01 12:33PM
cpses uprate boatwright.wpd	28579	
Header	726	

Options
Expiration Date: None
Priority: Standard
Reply Requested: No
Return Notification: None

Concealed Subject: No
Security: Standard

From: <jboatwright@txu.com>
To: <dhj@nrc.gov>, <jseawright@txu.com>
Date: 7/19/01 12:34PM
Subject: DRAFT RAI response

Please find attached, in Word Perfect format, draft responses to the concerns identified by Ichbal (sp?). The responses are presented as red line changes to the responses provided in our June 22 letter.

Please let me know of the adequacy of these responses at your earliest convenience.

Thanks, James (214-812-8232)

(See attached file: cpses uprate boatwright.wpd)

Question: **.....Please submit a plant specific power calorimetric measurement**

(EEIB1) **uncertainty calculation, using an approved methodology, to establish the stated value of the uncertainty in thermal power measurement.....**

CPSES Response:

The CPSES-specific uncertainty analyses associated with the measurement of the core thermal power is based on the square root of the sum of the squares methodology summarized in "Westinghouse Setpoint Methodology for Protection Systems Comanche Peak Unit 1, Revision 1, " WCAP-12123, Revision 2, April, 1989. The Westinghouse statistical setpoint methodology was used for all setpoints presented in the plant Technical Specifications when CPSES Unit 1 was originally licensed. This methodology was licensed by TXU Electric from Westinghouse and applied to all RPS and ESFAS-related Technical Specification setpoints for the original licensing of CPSES Unit 2 and in all subsequent applications to either unit. References to this methodology may be found in the Bases to Technical Specification 3.3.1 and 3.3.2.

Similarly, the current power calorimetric uncertainty calculation is consistent with the 1990-vintage Westinghouse methods with which CPSES was originally licensed. Although specific input values have changed, the methodology has not been revised since the plant was initially licensed. This specific methodology was used to support the recent 1% power uprate to CPSES Unit 2.

In the current CPSES-specific application of this methodology to the core power measurement uncertainty when using the LEFM✓ as the source for the feedwater mass flow rate, the benefits attainable through the use of multiple channels are not pursued. In other words, the calculation is a single-loop uncertainty and overstates the actual uncertainty associated with the core power measurement. As noted in the "Response to NRC Request for Additional Information On License Amendment Request 98-010," (TXX-99105, April 23, 1999), from the previous 1% uprate documents for Unit 2, this approach is consistent with ASME PTC 19.1 - 1985, "Measurement Uncertainty."

The general methodology for determining the core power is summarized below:

$$Q_{core} = Q_{ss} - NPHA$$

where: Q_{core} = the core thermal power (BTU/hr)

Q_{ss} = the heat removal through the secondary side of the plant

$$= W_f \cdot \{h_{stm}(P_{stm},x) - h_{fw}(P_{fw}, T_{fw})\} - W_{bldn} \cdot \{h_{stm} - h_{bldn}\}$$

where W_f = Feedwater mass flow rate

h_{stm} = steam generator outlet steam enthalpy as a function of steam pressure and quality

h_{fw} = main feedwater enthalpy as a function of feedwater pressure and temperature

W_{bldn} = steam generator blow down mass flow rate

h_{bldn} = steam generator blowdown enthalpy

NPHA = the net pump heat adder, which is the sum of the heat addition added to the reactor coolant by the reactor coolant pumps less system heat losses, primarily attributed to the charging and letdown flows, less an allowance for the ambient heat loss attributed to conduction and convection from the RCS metal masses.

The uncertainty associated with the feedwater mass flow rate is extracted from the NRC-approved report by the LEFM✓ supplier, Caldon, Inc. ("Improving Thermal Power Accuracy and Plant Safety While Increasing Operating Power Level Using the LEFM✓ System," ER-80P, Revision 0, March 1997).

The uncertainties associated with the remainder of the secondary-side heat removal calculation are determined by calculating the uncertainty associated with each process measurement (e.g., steam pressure) and then relating that uncertainty to an equivalent uncertainty associated with the secondary-side heat removal calculation through the use of sensitivity factors. Unless otherwise noted below, the sensitivity factors were developed by individually varying the measured parameters (feedwater pressure, feedwater temperature, main steam pressure, and feedwater mass flow rate) and allowances for other plant parameters (e.g., steam moisture content) in the above equation from nominal, full power values and assessing the effect of the change on the calculated core power. The individual parameters are varied over a range in excess of their expected values at full power operation, including allowances for measurement uncertainties. The results of these sensitivity analyses are presented in Table 1.

Effects of the Feedwater Flow Indication

The LEFM✓ system allows for a very precise determination of the feedwater mass flow rate. The LEFM✓ actually measures the fluid velocity. Based on precise measurements of the feedwater pipe diameter, a volumetric flow rate is digitally calculated. Given reasonably accurate feedwater pressure indications, the LEFM✓ digitally calculates a feedwater mass flow rate. As described in Reference 5, the LEFM✓ can measure/calculate the mass flow rate to within ±0.48% of the nominal (or rated) feedwater flow. As may be observed in the preceding equation, there is a direct,

one-to-one relationship between the feedwater flow indication and the core thermal power indication.

Effects of Steam Generator Blowdown

To obtain the most "accurate" core thermal power measurement, steam generator blowdown should be isolated. However, recognizing that blowdown isolation is not always practical, an evaluation of the accuracy associated with the effects of blowdown on the secondary power uncertainty is appropriate.

When performing calorimetric measurements when steam generator blowdown is not isolated, an explicit calculation of the blowdown heat removal rate is performed. This calculation is based on the blowdown flow rate, pressures, and temperatures, and assumes an uncertainty allowance of ±10% of the steam generator blowdown heat removal. The "inlet" enthalpy for the blowdown heat balance is based on the feedwater pressure and final temperature. For the "exit" enthalpy, feedwater pressure is again assumed and the temperature is approximately 500 °F. Although typically operated at much lower flow rates, the maximum blowdown flow rate can be as high as approximately 310,000 lbm/hr. Based on these conditions, the blowdown can remove approximately 6.26 MWt (total, from all four steam generators). The nominal NSSS thermal power is 3458 MWt plus the net RCP heat. Thus, blowdown accounts for a maximum of approximately 0.2% of the total heat removal through the secondary system. A ±10% uncertainty in the blowdown heat removal rate would affect the total NSSS calorimetric measurement by ±10% of 0.2%, or 0.02% RTP.

Effects of the Net Pump Heat Adder

The uncertainty associated with the net pump heat adder is derived by Westinghouse from the combination of primary system net heat losses and additions. The uncertainty allowance for the system heat losses (primarily attributed to charging and letdown flows) is ±10% of the measured value. An allowance of ±50% of the calculated value is provided for the ambient heat losses. The reactor coolant pump heat is known to a relatively high confidence level based on testing. The arithmetic sum of these uncertainties is less than 2 MWt which is less than the 0.085% RTP value used when RTP was defined to be 3411 MWt. This same conservative allowance will continue to be applied, even though Rated Thermal Power will be redefined as 3458 MWt.

For the remainder of the input parameters and indications to the core calorimetric measurement, standard SRSS methods are used to determine the uncertainty associated with a particular indication. Sensitivities of the core power to changes in the input parameters or indications are used to translate the uncertainty in the input to an equivalent uncertainty on the core calorimetric measurement. The sensitivities are summarized in Table 1.

The input parameters and indications actually used in the plant calorimetric measurement are feedwater pressure, feedwater temperature and steam pressure. A design allowance of 0.25%

moisture for the steam moisture carryover input is used. Precision instrumentation, distinct from the main plant monitoring equipment, is used for this calorimetric measurement.

The basic components of the pressure indication uncertainty calculations (for both the main steam pressure and the feedwater pressure) are:

$$P_{unc} = \pm\{(SCA + SMTE + SD)^2 + STE^2 + SPE^2 + RCA^2\}^{1/2}$$

where (all units are % span):

SCA = Sensor calibration allowance
= ±0.60% span

SMTE = Sensor measurement and test equipment accuracy allowance
= ±0.60% span

SD = Sensor drift allowance between calibration intervals
= ±0.90% span

STE = Sensor temperature effect (an allowance for changes to the ambient temperature from calibration)
= ±0.25% span

SPE = Sensor pressure effect (an allowance, only required for differential pressure transmitters, for changes to ambient and process pressures from calibration)
= ±0.00% span

RCA = Rack calibration allowance (an allowance for the accuracy with which the plant computer reflects the signal from the transmitter). Because the plant computer, with its digital output, is used as the M&TE device in the calibration, only a very small value for RCA is required to address any uncertainties introduced by the indication. For example, the stated accuracy of the plant computer A/D conversion and indication is less than ±0.05% span.
= ±0.15% span

Therefore,

$$P_{unc} = \pm\{(SCA + SMTE + SD)^2 + STE^2 + SPE^2 + RCA^2\}^{1/2}$$

$$= \pm\{(0.60 + 0.60 + 0.90)^2 + 0.25^2 + 0.0^2 + 0.15^2\}^{1/2}$$

$$= \pm 2.12\% \text{ span.}$$

These transmitters have a span of 500 psi; thus, the pressure uncertainty is 10.6 psi, rounded to 11 psi.

The feedwater temperature indication is calculated by the LEFM✓ system and has a stated accuracy of ±0.9˚F.

The individual uncertainties associated with the precision calorimetric measurement are summarized in Table 1.

Table 1. Precision Calorimetric Uncertainties Using the LEFM✓

COMPONENT	INSTRUMENT ERROR	SENSITIVITY	POWER UNCERTAINTY
Feedwater Flow LEFM✓	**±0.48%**	**1:1**	**±0.48% RTP**
Steam Generator Blowdown	**±10.0%**	**1:0.002**	**±0.02% RTP**
Feedwater Enthalpy **Temperature** **Pressure**	**±0.9˚F** **±11.0 psi**	**0.1430%RTP/˚F** **0.0001035%RTP/psi**	**±0.129% RTP** **±0.001% RTP**
Steam Enthalpy **Pressure** **Moisture**	**±11.0 psi** **±0.25 %mst**	**0.00491%RTP/psi** **0.85%RTP/%mst**	**±0.054% RTP** **±0.21% RTP**
Net Pump Heat Addition			**±0.085% RTP**

The total power calorimetric uncertainty is:

$$\text{UNC-PWRCAL} = \pm\{(\text{LEFM})^2 + (\text{BLDN})^2 + (\text{FWh}_{temp})^2 + (\text{FWh}_{prs})^2 + (\text{STMh}_{prs})^2 + (\text{STMh}_{moist})^2 + (\text{NPHA})^2\}^{1/2}$$

$$\text{UNC-PWRCAL} = \pm\{(0.48)^2 + (0.02)^2 + (0.129)^2 + (0.001))^2 + (0.054)^2 + (0.21)^2 + (0.085)^2\}^{1/2}$$

$$= \pm 0.55\% \text{ RTP}$$

This value is less than the value of ±0.61% RTP reported in the previously cited Caldon, Inc. Engineering Report (ER-80P).

Question: (EEIB1 cont.) **.... In addition, please provide a description of the programs and procedures that will control calibration of the LEFM system and the pressure and temperature instrumentation whose measurement uncertainties affect the plant power calorimetric uncertainties. In this description, please include the procedure for:**

1. **Maintaining calibration,**
2. **Controlling software and hardware configuration,**
3. **Performing corrective actions,**
4. **Reporting deficiencies to the manufacturer, and**
5. **Receiving and addressing manufacturer deficiency reports.**

CPSES Response:

1. The LEFM✓ system contains self-diagnostic routines. Alarms annunciate the detection of any off-normal conditions (i.e., when monitored parameters fall outside acceptable ranges). In addition to the continuous self-diagnostics internally performed, the LEFM✓ system is periodically calibrated per the manufacturer's recommendations. This procedure also includes a calibration of the pressure transmitters which provide input to the LEFM and their associated A/D converters. A separate procedure is periodically performed to verify the adequacy of the calibration of all the transmitters and their associated plant computer inputs which are used in the plant power calorimetric measurement.

2.-5. As described in FSAR Table 17A-1, the LEFM and its associated software are classified as non-1E equipment. Full QA requirements were not imposed for manufacture and/or installation; however, a specifically structured non-Appendix B QA program is applied at CPSES. The software and supporting hardware associated with the LEFM is controlled in accordance with the CPSES Nuclear Software Quality Assurance Program. This program includes measures to maintain the system in the validated configuration.

The CPSES Nuclear Software Quality Assurance Program includes provisions for reporting and resolving deficiencies as well as receipt and evaluation of condition reports received from the manufacturer. Non-conforming conditions are entered into the corrective action program where, among other activities, they are evaluated for 10CFR 21 reportability. This evaluation necessitates contact with the LEFM✓ system manufacturer. The manufacturer, Caldon, Inc., is also required, both contractually and in accordance with their Quality Assurance Plan, to report any non-conformance identified with the equipment or software to TXU

Electric.

The other transmitters and associated channels that are used in the plant power calorimetric measurement are addressed within the non-Appendix B QA program, which includes the typical requirements for design and configuration control, processing of vendor information, and a corrective action program.

Mail Envelope Properties (3B58B078.AC0 : 6 : 39616)

Subject: Draft LAR 01-06 Supplement 1
Creation Date: 7/20/01 6:27PM
From: "Michael Riggs" <mriggs1@txu.com>

Created By: mriggs1@txu.com

Recipients
nrc.gov
owf4_po.OWFN_DO
DHJ (David Jaffe)

txu.com
Todd_Evans CC (Todd Evans)
rwalker5 CC (Roger Walker)
jlamarc1 (Jeffrey LaMarca)
iahmad1 (Ijaz Ahmad)
JTAYLOR2 (John A Taylor)
chudson1 (Scott Hudson)
vmeiron1 (Trey Meiron)
ssmith6 (Stephen L Smith)
dtirsun1 (Dan Tirsun)
skarpyak
dwoodla1 (Don Woodlan)

Post Office	**Route**
owf4_po.OWFN_DO	nrc.gov
	txu.com

Files	**Size**	**Date & Time**
MESSAGE	875	07/20/01 06:27PM
LAR 0106 sup & att 1 0720.wpd		28398
LAR 0106 att 2 0720.wpd	526906	
LAR 0106 att 3 0720.wpd	49228	
LAR 0106 att 4 0720.wpd	25849	
LAR 0106 att 5 0720.wpd	48894	
LAR 0106 att 6 0720.wpd	25896	
LAR 0106 att 7 0720.wpd	9709	
LAR 0106 att 8 RAI.wpd	58868	
Header	1139	

Options
Expiration Date: None
Priority: Standard

Reply Requested: No
Return Notification: None

Concealed Subject: No
Security: Standard

From: "Michael Riggs" <mriggs1@txu.com>
To: <dhj@nrc.gov>, "Don Woodlan" <dwoodla1@txu.com>, <skarpyak@txu.com>, "Dan Tirsun" <dtirsun1@txu.com>, "Stephen L Smith" <ssmith6@txu.com>, "Trey Meiron" <vmeiron1@txu.com>, "Scott Hudson" <chudson1@txu.com>, "John A Taylor" <JTAYLOR2@txu.com>, "Ijaz Ahmad" <iahmad1@txu.com>, "Jeffrey LaMarca" <jlamarc1@txu.com>
Date: 7/20/01 6:28PM
Subject: Draft LAR 01-06 Supplement 1

Dear Mr. Jaffe,

As requested by Don Woodlan, I am forwarding you a draft copy of our LAR 01-06 Supplement Letter. This supplement would request a one-time TS amendment needed to perform at-power preventive maintenance on offsite circuit startup transformer XST2.

The transmittal letter and supporting attachments are provided as separate files created with WordPerfect 9. Please let me know if you encounter any problems with the attached files.

Mike Riggs
(254) 897-5218
Regulatory Affairs
Comanche Peak

(See attached file: LAR 0106 sup & att 1 0720.wpd)(See attached file: LAR 0106 att 2 0720.wpd)(See attached file: LAR 0106 att 3 0720.wpd)(See attached file: LAR 0106 att 4 0720.wpd)(See attached file: LAR 0106 att 5 0720.wpd)

(See attached file: LAR 0106 att 6 0720.wpd)(See attached file: LAR 0106 att 7 0720.wpd)(See attached file: LAR 0106 att 8 RAI.wpd)

CC: "Roger Walker" <rwalker5@txu.com>, "Todd Evans" <Todd_Evans%T@txu.com>

Ref: 10CFR50.90

CPSES-
Log # TXX-
File # 00236

July 31, 2001

U. S. Nuclear Regulatory Commission
Attn: Document Control Desk
Washington, DC 20555

SUBJECT: COMANCHE PEAK STEAM ELECTRIC STATION (CPSES)
DOCKET NOS. 50-445 AND 50-446
RESPONSE TO REQUEST FOR ADDITIONAL INFORMATION
AND SUPPLEMENT TO LICENSE AMENDMENT REQUEST 01-06
FOR REVISION TO TECHNICAL SPECIFICATIONS,
EXTENSION OF ALLOWABLE COMPLETION TIMES AND
SURVEILLANCE REQUIREMENT CHANGE FOR EMERGENCY
DIESEL GENERATORS, QUALIFIED OFFSITE CIRCUITS, AND
AC ELECTRICAL POWER DISTRIBUTION SUBSYSTEM

REF: 1) TXU Electric letter logged TXX-01077, dated April 25, 2001, from C. L. Terry to the NRC

Gentlemen:

Pursuant to 10CFR50.90, TXU Electric herein supplements Licensing Amendment Request (LAR) 01-06 and requests that the approval date for changes to the CPSES Unit 1 and Unit 2 Technical Specification (TS), as initially submitted by reference 1, be rescheduled until April 25, 2002.

In addition, as provided in the attached supplement to LAR 01-06, TXU Electric hereby requests prompt NRC review and approval of a one-time only change to the CPSES Technical Specifications that would extend the required Completion Time for restoration of an inoperable offsite circuit from 72 hours to 21 days. This change is needed to ensure the continued long term reliability of 138 kV offsite circuit Startup Transformer XST2 which is common to both CPSES units. NRC approval of this request would allow sufficient time to perform preventive maintenance on the XST2 transformer while both units remain at power. This change applies to both CPSES

Unit 1 and Unit 2.

In order to support timely and optimized scheduling considerations needed to finalize planning for an XST2 transformer outage in the fall of this year, TXU Electric requests NRC approval of the proposed one-time change to the CPSES Technical Specifications by September 15, 2001, to be implemented within 60 days. This This supplement does not affect the proposed TS changes previously submitted by reference 1. This supplement only revises the previously requested approval date.

Attachment 1 is the required affidavit. Attachment 2 provides a detailed description of the proposed one-time change to TS, a technical analysis of the proposed change, TXU Electric's determination that the proposed change does not involve a significant hazard consideration, a regulatory analysis of the proposed changes and an environmental evaluation. Attachment 3 provides the affected Technical Specification pages marked-up to reflect the proposed change. Attachment 4 provides proposed changes to the Technical Specification Bases for information only. These changes will be processed per CPSES site procedures. Attachment 5 provides retyped Technical Specification pages which incorporate the requested changes. Attachment 6 provides retyped Technical Specification Bases pages which incorporate the proposed changes. The commitments made in this letter are listed in Attachment 7 and the figures to support this supplement are included in Attachment 8.

Also included in this supplement is TXU Electric's response to NRC Requests for Additional Information (RAI) regarding the risk-informed evaluations performed in support of the TS changes initially submitted by reference 1. The RAI response is included as Attachment 9.

In accordance with 10CFR50.91(b), TXU Electric is providing the State of Texas with a copy of this proposed License Amendment Request.

Should you have any questions, please contact Mr. Mike Riggs at (254) 897-5218.

Sincerely,

C. L. Terry

By: _____
Roger D. Walker
Regulatory Affairs Manager

MJR/mjr
Attachments
1. Affidavit
2. Description and Assessment
3. Markup of Technical Specifications pages
4. Markup of Technical Specifications Bases pages (for information)
5. Retyped Technical Specification Pages
6. Retyped Technical Specification Bases Pages (for information)
7. Commitments
8. Response to NRC Request for Additional Information (RAI)

c - E. W. Merschoff, Region IV
J. A. Clark, Region IV
D. H. Jaffe, NRR
Resident Inspectors, CPSES

Mr. Authur C. Tate
Bureau of Radiation Control
Texas Department of Public Health
1100 West 49th Street
Austin, Texas 78704

UNITED STATES OF AMERICA
NUCLEAR REGULATORY COMMISSION

In the Matter of	)		
	)		
TXU Electric	)	Docket Nos.	50-445
	)		50-446
(Comanche Peak Steam Electric Station,	)	License Nos.	NPF-87
Units 1 & 2)	)		NPF-89

AFFIDAVIT

Roger D. Walker, being duly sworn, hereby deposes and says that he is the Regulatory Affairs Manager of TXU Electric, the licensee herein; that he is duly authorized to sign and file with the Nuclear Regulatory Commission this supplement to License Amendment Request 01-06; that he is familiar with the content thereof; and that the matters set forth therein are true and correct to the best of his knowledge, information and belief.

_____
Roger D. Walker
Regulatory Affairs Manager

STATE OF TEXAS)
)
COUNTY OF)

Subscribed and sworn to before me, on this _____ day of _____, 2001.

_____
Notary Public

ATTACHMENT 2 to TXX-

LICENSEE'S EVALUATION

LICENSEE'S EVALUATION

Subject: Supplement to License Amendment Request 01-06 to allow for a one time preventive outage on Startup Transformer XST2

1.0 DESCRIPTION

2.0 PROPOSED CHANGE

3.0 BACKGROUND

4.0 TECHNICAL ANALYSIS

5.0 REGULATORY SAFETY ANALYSIS

5.1 No Significant Hazards Consideration (NSHC)

5.2 Applicable Regulatory Requirements/Criteria

6.0 ENVIRONMENTAL CONSIDERATION

7.0 REFERENCES

8.0 PRECEDENTS

9.0 FIGURES

1.0 DESCRIPTION

Per reference 1, TXU Electric initially requested an amendment to the CPSES Unit 1 facility operating license (NPF-87) and Unit 2 facility operating license (NPF-89) by incorporating changes to CPSES Units 1 and 2 Technical Specification (TS) 3.8.1 for AC Sources - Operating to extend the allowable Completion Times for the Required Actions associated with restoration of an inoperable Emergency Diesel Generator (EDG) and an inoperable offsite circuit (i.e., startup transformer). Changes were also requested to revise TS Surveillance Requirement SR 3.8.1.14 for the 24-hour EDG endurance run to allow performance during Modes 1 and 2, and to revise Technical Specification (TS) 3.8.9 for Distribution Systems - Operating to extend the allowable Completion Times for the Required Actions associated with restoration of an inoperable AC electrical power distribution system (i.e., 6.9 kV AC safety bus). The requested changes were based upon CPSES plant specific risk-informed and deterministic evaluations performed in a consistent manner with the risk-informed approaches endorsed by Regulatory Guides 1.174 and 1.177. The proposed changes would increase operational flexibility and provide additional allowances for performance of testing, repairs, and periodic maintenance while at power.

In consideration of recent discussions with NRC project review personnel, TXU Electric has requested by this supplement to LAR 01-06 to revise the initially proposed approval date for the above TS changes (as submitted by reference 1) until April 25, 2002. This action is intended to support the need for prompt review and approval of the proposed one-time only TS change request discussed below.

TXU Electric herein request, in addition to the TS changes previously submitted by reference 1, an amendment to the CPSES Units 1 and 2 Technical Specifications to allow a one-time only change to TS 3.8.1 Action A.3 by extending the required Completion Time for restoration of an inoperable offsite circuit from 72 hours to 21 days. This change would facilitate timely preventive maintenance needed to ensure the long term reliability of Startup Transformer (ST) XST2 by allowing CPSES Units 1 and 2 to remain at-power for the duration of the extended XST2 transformer outage.

2.0 PROPOSED CHANGE

The proposed changes to Comanche Peak - Units 1 and 2 Technical Specifications (TS) would allow for a one-time only preplanned preventative maintenance outage of Startup Transformer XST2 for up to 21 days. In order to effect this one-time change, Technical Specification (TS) 3.8.1 AC Sources - Operating would be revised by modifying the Completion Time for Required Action A.3. The modification includes a new completion time which reads, "21 days for a one time preventive maintenance outage on Startup Transformer XST2 to be completed by February 28, 2002." This new completion time will be connected with a logical connector "OR." The logical connector "AND" in the current completion time for this require action will be moved to the right. The changes to TS 3.8.1 are marked-up on the Technical Specification pages in Attachment 3.

Under the Technical Specifications Bases Control program, TXU electric intends to revise TS Bases 3.8.1 by inserting the information below (see Attachment 4).

> A temporary Completion Time is connected to the Completion Time requirements above (72 hours AND 6 days from discovery of failure to meet LCO) with an "OR" connector. The temporary completion time is 21 days and applies to the performance of preventive maintenance on Startup Transformer XST2. The temporary Completion Time of 21 days expires on February 28, 2002. If, during the conduct of the prescribed XST2 maintenance outage, should any combination of the remaining operable AC Sources be determined inoperable (on an individual unit bases), current TS requirements would apply.

Retyped Technical Specification pages and Technical Specification Bases pages which incorporate the proposed changes, are provided in Attachments 5 and 6, respectively.

3.0 BACKGROUND

3.1 System Descriptions

The offsite AC power circuits for CPSES consists of two physically independent circuits from separate switchyards with startup transformers sized to simultaneously carry plant essential loads for both units. Two independent emergency diesel generators (EDGs) per unit supply on site AC power.

3.1.1 Availability of the Off-Site Power System

The transmission lines of TXU Electric are an integrated system with operations coordinated by the system dispatcher so as to maintain system reliability. Transmission systems consist of 345-kV lines for bulk supply and 138-kV and 69-kV lines to transmit power to load-serving substations. Composition of TXU Electric's generation sources include fossil fuel plants (lignite, gas/oil, and combustion turbines) and the CPSES nuclear plant (interconnected). Direct ties to other utilities in Texas are maintained, creating a highly reliable integrated system.

The CPSES output is connected to the 345-kV transmission system via the CPSES Switchyard. The startup and shutdown power for the units are derived from the 138-kV and 345-kV system. Separate connections to the 138-kV Switchyard and the 345-kV Switchyard provide independent and reliable offsite power sources to the Class 1E systems. The highly reliable network interconnections are made through five 345-kV and two 138-kV transmission lines to the TXU Electric grid as shown on the figures in Attachment 8.

Two physically independent and redundant sources of offsite power are available on an immediate basis for the safe shutdown of either unit. The preferred source to Unit 1 is the 345-kV offsite supply from the 345-kV Switchyard and the startup transformer, XST2; the preferred source to Unit 2 is the 138-kV offsite supply from the 138-kV Switchyard and the startup transformer, XST1. Each of the startup transformers (XST1 and XST2) normally energizes its related 6.9 kV AC Class 1E buses; i.e., XST1 normally energizes Unit 2 Class 1E buses and XST2 normally energizes Unit 1 Class 1E buses. This eliminates the need for automatic transfer of safety-related loads in the event of unit trips. In the event one startup transformer (e.g., XST1, a preferred source) becomes unavailable to its normally fed class 1E buses, power is made available from the other startup transformer (e.g., XST2, an alternate source) by an automatic transfer scheme.

The preferred power sources supply power to the Class 1E buses during plant startup, normal operation, emergency shutdown, and upon a unit trip.

Each startup transformer has the capacity to carry the required Class 1E loads of both units during all modes of plant operation.

The Class 1E buses of each unit can be supplied by two independent and reliable immediate-access offsite power sources. Sharing of these offsite power sources between the two units has

no effect on the station electrical system reliability because each transformer is capable of supplying the required safety-related loads of both units if it becomes necessary to safely shut down both units simultaneously, although the design criteria require consideration of a Design Basis Accident on one unit only.

The design basis load capability of each Startup Transformer includes both of the ESF buses on both units, assuming an accident in progress on one unit and the orderly shutdown and cooldown of the second unit. In the event that all offsite power sources become unavailable, fully redundant EDGs (two per unit) will furnish power to Engineered Safeguards Features (ESF) equipment.

3.1.2 Availability of the On-Site Power System

The standby AC Power System is an independent, onsite, automatically starting system designed to furnish reliable and adequate power for Class 1E loads to ensure safe plant shutdown and standby when preferred and alternate power sources are not available. Four independent diesel generator sets, two per unit, are provided.

Loads important to plant safety are divided into redundant divisions. Each division is supplied standby power from an individual EDG. Each EDG is completely independent of any auxiliary transformer in the performance of its required function. The EDGs are physically and electrically independent. With this arrangement, redundant components of all ESF systems are supplied from a separate ESF bus so that no single failure can jeopardize the proper functioning of redundant ESF loads. Due to the redundancy of the unit's ESF divisions and EDGs, the loss of any one of the EDGs will not prevent the safe shutdown of the unit. The total standby power system, including EDGs and electrical power distribution equipment, satisfies the single failure criterion.

The purpose of the EDGs is to provide an onsite standby power source upon the loss of preferred and alternate offsite power sources. An EDG is automatically started by a safety injection signal or an under-voltage signal on the 6.9 kV ESF bus served by the EDG. Upon loss of voltage on a 6.9 kV ESF bus due to a Loss of Offsite Power (LOOP) with no safety injection signal present, under-voltage relays automatically start the EDGs. Sequential loading of the EDG is automatically performed.

The EDG feeder breaker will close to its associated load group automatically only if the other source feeder breakers to the load group are open. When the EDG feeder breaker is closed, no other source feeder breaker will close automatically. Design and procedural controls ensure that no means exist for connecting redundant load groups with each other.

The design basis for the EDGs is that loss of one EDG will not result in the loss of safety function. With two EDGs available per unit, the system is capable of performing its intended safety function with an assumed single failure of one EDG.

3.1.3 Station Blackout (SBO) EDG Capacity

Comanche Peak Station is able to withstand and recover from a SBO event of 4 hours in accordance with the guidelines of RG 1.155, "Station Blackout," dated August 1988 (Reference 6).

3.2 FSAR References

Related background in the CPSES FSAR is found primarily in Section 1A(B) and Section 8. Compliance with NRC design criteria is described in detail in FSAR Section 8.1, "INTRODUCTION," (Reference 1) and in FSAR Appendix 1A(B) "APPLICATION OF NRC REGULATORY GUIDES" (Reference 1). On site power systems are described in FSAR section 8.3 and Station Blackout is described in Appendix 8B of the FSAR.

3.3 Conditions That Proposed Amendment Is Intended to Resolve

In order to perform maintenance on Startup Transformer XST2 both CPSES units would need to be in the cold shutdown state simultaneously for an extended period of time. This is due to the fact that Startup Transformer XST2 is provides one of the two TS required offsite power source to both Unit 1 and Unit 2 and both units are required to maintain two offsite power sources when above cold shutdown conditions. Based on experience with similar transformers, the proposed preventive maintenance could not be completed in the relatively short duration currently allowed by TS. CPSES allows 72 hours to restore the transformer to an operable status. A plant shutdown to cold shutdown is required if the transformer is not restored to an operable status within the Completion Time limits. As will be discussed in the next section of this submittal, little preventative maintenance could be performed in such a short period of time.

Given the importance of offsite power sources, it is prudent to maintain them in a reliable condition while minimizing their unavailability. TXU Electric has gained experience with similar type transformers installed in TXU transmission system and has identified the need to perform preventive maintenance on offsite circuit Startup transformer XST2. Based on this experience, the high voltage bushings presently in service on transformer XST2 should be replaced to insure the long term reliability of the transformer. TXU Electric has successfully performed the recommended maintenance on similar transformers in the TXU transmission system.

Due to power generation demands and overall economic considerations, it is not anticipated for unit planned outage schedules to include overlapping, or prolonged simultaneous shutdown of both units of sufficient duration to perform the recommended XST2 preventive maintenance.

Comanche Peak intends to use the proposed one time 21 day Completion Time to perform a planned overhaul of ST XST2. 21 days has been requested to ensure the CT can be met even with emergent issues and that a cold shutdown would be unlikely. The proposed Completion Time of 21 days is adequate to perform the proposed preventive maintenance requiring disassembly of the transformer and to perform post-maintenance and operability tests required to return the offsite circuit to operable status.

3.4 Circumstances That Establish a Need for the Proposed Amendment

A discussion of the preventive maintenance activity being planned for Startup Transformer XST2 and the estimated times associated with these activities is included in the following section of this submittal.

Details associated with the recommended XST2 preventative maintenance are discussed to provide adequate justification for the length of the proposed Completion Time extension. In addition, the risk associated with extending the Completion Time, and the contingencies that will be established to minimize such risk are also discussed. The following table represents an estimate of the work to be performed and the time associated with each activity. The information in this table is subject to change depending on the initial inspection results once the transformer is removed from service, any degradations detected during the performing the desired maintenance, additional industry experience, etc.

Startup Transformer XST2 is a FOA (forced oil and air), 58.33 KVA, tapped at 345 kV/ 6.9 kV. Routine preventative maintenance is performed on this transformer on a periodic basis of every three years. This maintenance can be performed either at power or while either unit is shutdown. The routine preventative maintenance does not expose the transformer internals to outside air and typically requires 36 hours to complete from the time the transformer is taken out of service until the time the safety related buses are normalized. Any preventative maintenance that removes transformer oil could allow air and moisture to be admitted to the transformer internals, thus this type maintenance is typically scheduled every ten years or as determined by gas analysis. Maintenance of this nature requires subsequent oil processing and longer outage times to restore the transformer to operating conditions. The typical time to process transformer oil is approximately 5 days.

The following table details the proposed preventative maintenance for XST2. Enveloped within this table is the routine maintenance performed every three years which adds no additional length to the duration of the transformer outage. The routine maintenance includes:

- Relay and metering calibrations.
- Instrumentation calibrations
- External clean and inspect.
- Affected breaker cubicle clean and inspect.
- Grounding resistor bank clean and inspect.

MAINTENANCE ACTIVITY	ESTIMATED DURATION
Remove transformer from service and danger tag.	12 hours
Drain oil. Calibrate instrumentation and relaying.	24 hours
Remove and regasket coolers and pumps. Clean and inspect transformer.	72 hours
Replace and regasket bushings.	72 hours

Oil fill.	24 hours
Process oil.	96 hours
Place transformer in soak and vacuum.	24 hours
Trip test, deluge and restore to power.	12 hours
TOTAL	**336 HOURS (14 DAYS)**

The estimated hours for each set of activities assumes that work is performed around the clock, 24 hours a day and 7 days a week.

In addition, in order to minimize the overall transformer outage time,

- Service and support equipment will be pre-staged.
- Replacement parts will be in hand and pre-staged.
- Experienced personnel will be used.
- Detailed pre-job briefs will be conducted with affected departments, including Operations, at least one week before the outage start.

Based on the above planned transformer maintenance activities, the CPSES Work Planning and Scheduling group has recommended a two week window in the month of October 2001 as the optimum time for the proposed XST2 maintenance outage. The 14 day window is based upon anticipated favorable transmission grid and weather conditions, and on the availability of experienced manpower and technical support. Additionally, there are no significant competing plant modifications or outage requirements planned for this period.
Based on similar transformer outage experience, the requested 21 Completion Time is believed sufficient to provide for unforeseen adverse weather conditions and emergent needs.

Since the transformer is exposed to atmospheric conditions, maintenance on XST2 could be halted during severe weather conditions, especially since the maintenance involves work around high voltage electrical equipment. Therefore, based on the above information, TXU Electric requests a Completion Time of 21 days to support situations when such extensive, preplanned preventative maintenance may be required. The transformer will be returned to service and declared operable as soon as possible following completion of the maintenance and should not challenge the required Completion Time.

During the most limiting state of transformer maintenance, CPSES Electrical Maintenance has estimated that XST2 could be reassembled and placed in service within a maximum of five days should the need arise.

4.0 TECHNICAL ANALYSIS

The proposed changes have been evaluated to determine that current regulations and applicable requirements continue to be met, that adequate defense-in-depth and sufficient safety margins are maintained, and that any increases in core damage frequency (CDF) and large early release frequency (LERF) are small and consistent with the NRC Safety Goal Policy Statement (Reference 3), and the acceptance criteria in Regulatory Guide 1.174, "An Approach for Using Probabilistic Risk Assessment In Risk-Informed Decisions On Plant-Specific Changes to the Licensing Basis," July 1998, (Reference 4) and Regulatory Guide 1.177, "An Approach for Plant-Specific, Risk-Informed Decision making: Technical Specifications," August 1999 (Reference 5).

The justification for the use of a 21 day offsite circuit extended Completion Time is based upon a risk-informed and deterministic evaluation consisting of three main elements: 1) the availability of the redundant offsite power source, 2) the risk reduction which occurs when the maintenance is performed at power in lieu of performing plant shutdowns and startups on both units, and 3) the implementation of the Configuration Risk Management Program (CRMP) administrative requirements when Startup Transformer XST2 is removed from service the extended Completion Time. The CRMP is used to assess the risk impact due to XST2 out of service, as other work, and helps ensure that there is no significant increase in the risk of a severe accident while maintenance is performed. These elements provide the bases for justification of the proposed TS change by providing a high degree of assurance that power can be provided to the ESF buses during all Design Basis Accidents (DBAs) during the XST2 extended Completion Time.

The assumptions used in the SBO analysis regarding the availability and reliability of the EDGs are unaffected by this proposed change. The results of the SBO analysis are also unaffected by this change.

4.1 Deterministic Considerations

The unavailability of one startup transformer is already considered in the plant design and is allowed by the current CPSES Technical Specifications. The increased outage time for a startup transformer has no affect on the capability of each transformer to supply the required safety-related loads of both units if it becomes necessary to safely shut down both units simultaneously.

Comanche Peak Station is designed and operated consistent with the defense-in-depth philosophy. The units have diverse power sources available (e.g., EDGs and STs) to cope with a loss of the preferred AC source (i.e., offsite power). The overall availability of the AC power sources to the ESF buses will not be reduced significantly as a result of increased on-line maintenance activities and the planned preventive maintenance on XST2 will further insure the continued long term reliability of the transformer. It is therefore, acceptable, under certain controlled conditions, to extend the Completion Time and perform on-line maintenance intended

to maintain the reliability of the onsite emergency power systems.

The impact of the proposed TS changes were evaluated and determined to be consistent with the defense-in-depth philosophy. The defense-in-depth philosophy in reactor design and operation results in multiple means to accomplish safety functions and prevent release of radioactive material.

Even with XST2 out of service there are multiple means to accomplish safety functions and prevent release of radioactive material. The CPSES PRA (see Section 4.2 below) evaluation confirms the results of the deterministic analysis, i.e., the adequacy of defense-in-depth and that protection of the public health and safety are ensured. System redundancy, independence, and diversity are maintained commensurate with the expected frequency and consequences of challenges to the system. As demonstrated in Section 4.2 below there are no risk outliers. Implementation of the proposed changes will be done in a manner consistent with the defense-in-depth philosophy. Station procedures will ensure consideration of prevailing conditions, including other equipment out of service, and implementation of compensatory actions to assure adequate defense-in-depth whenever XST2 is out of service. No new potential common cause failure modes are introduced by these proposed changes and protection against common cause failure modes previously considered is not compromised. Independence of physical barriers to radionuclide release is not affected by these proposed changes.

Adequate defenses against human errors are maintained. These proposed changes do not require any new operator response or introduce any new opportunities for human errors not previously considered. Qualified personnel will continue to perform XST2 maintenance activities whether they are performed on-line or during shutdown. The maintenance activities are not affected by this change with the exception that sufficient time will be available to perform the XST2 preventive maintenance while both units remain on-line. No other new actions are necessary.

The acceptability of the extended duration is supported by the following deterministic enhancements.

Application of Configuration Risk Management Program (CRMP)

Methodologies (CRMP and ORAM™) associated with risk monitoring and contingency action planning currently exist at CPSES and provide acceptable assurance of continued safe reactor operations during periods of equipment inoperability. The Configuration Risk Management Program (CRMP) (see TS 5.5.18) will be applied throughout the duration of the extended outage.

The CRMP additionally requires management approval for entry into an LCO for planned maintenance activities that would exceed 50% of the required LCO Completion Time. Thus the planned maintenance on XST2 (14 day duration) would be greater 50% of the requested 21 day Completion time ensuring specific management attention and overall heightened plant awareness in support of the planned activity.

In accordance with the CRMP, equipment identified as important to Loss of Offsite Power and Station Blackout considerations will be administratively controlled and protected to insure that the equipment, including the Emergency Diesel Generators, the Turbine Driven Auxiliary Feedwater Systems, Station Service Water Systems, and Backout Sequencers, assuming both units at power, remain operable and available for the duration of the planned XST2 transformer maintenance outage. The CRMP also requires identification and preparation of contingency plans as warranted.

Work Planning

As discussed in section 3.4 above, extensive planning has been performed. Two important aspects of this planning are the pre-staging of needed equipment and the confirmation of the availability of qualified personnel to perform the maintenance.

No major switchyard Activity will be allowed

During this maintenance on XST2, all activity in the switchyards will be closely monitored and controlled. No activity will be allowed that could challenge the operability of the other offsite AC power source.

Controls or Prohibition of Maintenance or Testing of Other Important Equipment

To minimize risk during the planned maintenance outage of startup transformer XST2, maintenance and testing of the EDGs or the 6.9 kV AC safety bus will not be conducted.

Whether planned or unplanned, activities that result in the inoperability of a TS required offsite power source require contingencies to be established that act to protect all other available sources of power. In the instance of XST2 being removed from service for preplanned preventative maintenance, elective maintenance would not be allowed on XST1 or any of the EDGs that are supporting an operable bus on either unit.

Scheduling to Minimize Grid Load and Weather Impacts

The scheduled window for the proposed transformer outage has been optimized to occur well past the summer peak loads and prior to the likelihood of winter weather ice storms (providing optimum grid conditions). The proposed schedule also anticipates suitable weather conditions conducive to the performance of the mostly outdoor transformer maintenance tasks. These considerations include equipment protection, minimized job interruptions, and good worker conditions.

Scheduling to Maximize Operator, Maintenance and Management Focus

By performing this maintenance on line when no other significant activities are taking place (as opposed to an outage, for example, where many competing tasks are occurring at the same time), the plant operators, the maintenance staff and plant management will be able to focus on this activity. The XST2 transformer outage is scheduled to ensure the availability of experienced manpower and technical support personnel, as well as to reduced the potential for distraction due to competing job demands.

Unit Work Schedules Modified to Support XST2 Maintenance

Work Scheduling has preliminarily determined that routine testing and preventive maintenance activities, which are normally performed on a 12 week rotating basis, can be adjusted to insure that surveillance testing of equipment identified as important to Loss of Offsite Power and Station Blackout considerations is demonstrated current prior to the start of the XST2 outage work window, and that additional routine testing and preventive maintenance should not be required on the identified equipment for the duration of the planned XST2 outage.

Turbine Drive Auxiliary Feedwater Pumps Protected

In addition, the steam driven emergency feedwater pumps (one per unit and called the Turbine Driven Auxiliary Feedwater pumps at CPSES) are likewise protected from elective maintenance activities since they are considered a mitigation to station blackout conditions when electric feedwater pumps would be unavailable. Surveillance testing of any such "protected" equipment that falls due during the period that XST2 is out of service would be performed prior to removing XST2 from service to prevent jeopardizing such equipment during the XST2 maintenance window. Risk strategies and maintenance practices at CPSES also act to ensure replacement parts are available and pre-staged, along with other support equipment that may be required prior to entry into the maintenance window. Other factors that are considered at CPSES when offsite power sources are involved include the time of year (projected atmospheric stability), projected offsite power grid requirements, overall plant condition, availability of qualified and experienced personnel, etc.

Summary

In summary, CPSES has a rugged design which retains desired design features such as defense in depth, the ability to mitigate design basis accidents with a single failure, independent trains, etc. with Startup Transformer XST2 out of service. This condition is allowed by the design and the Technical Specifications. The following is a listing of contingencies or conditions that will be applicable during the proposed XST2 preventative maintenance window to deterministically enhance the capability of the plant:

1. The Configuration Risk Management Program of TS 5.5.18 will be applied during the extended outage.
2. Controls will be in place to limit maintenance on other important equipment

3. All necessary equipment will be prestaged
4. Necessary personnel will be pre-assigned and verified available
5. The maintenance will be scheduled to minimize potential adverse impact from the electrical grid or weather
6. Major switchyard activities will be prevented
7. Surveillance testing of key equipment will be performed prior to removing XST2 from service .
8. The focus of operators, maintenance personnel and management is enhanced by scheduling the work when competing activities are not occurring.
9. The operability of the Turbine Driven Auxiliary Feedwater Pump will be controlled

For the one-time increase in allowed Completion Time for preventive maintenance on Startup Transformer XST2, the plant remains in a condition for which the plant has already been analyzed and deterministic enhancements will be implemented: therefore, from a deterministic aspect, these changes are acceptable.

4.2 Evaluation of Risk Impact

The purpose of this section is to describe the Probabilistic Safety Assessment (PRA) conducted in support of the Comanche Peak submittal of a one-time CT extension request for offsite circuit startup transformer XST2. Risk-informed changes to a nuclear power plant's licensing basis consist of both deterministic and probabilistic evaluations, as required by NRC Regulatory Guides 1.174 (Reference 4) and 1.177 (Reference 5). This Section documents the probabilistic evaluation and is intended to supplement the deterministic engineering evaluations described in Section 4.1

This analysis evaluates extending the offsite circuit startup transformer CT from 72 hours to 21 days. The one time CT extension for the startup transformer will be used to support maintenance activities on startup transformer XST2. The risks associated with performing the work on XST2 at power and in mode 5 were determined and compared. This comparison includes the risks associated with the transition to and from mode 5.

The probabilistic evaluations presented in the following sections support the one time CT extension request for offsite circuit startup transformer XST2 The results of the evaluations presented herein justify extending the CT for the ST . The risk methods employed are detailed in Section 4.2.1, followed by a discussion on PRA quality in Section 4.3. The analysis tasks and results are presented in Sections 4.2.1 and 4.2.2, respectively.

4.2.1 Overall Methodology

This section describes the CPSES PRA model for internal events and provides a description of the overall methodology that was used for the PRA analysis in support of this submittal. Features

of the CPSES PRA model that were used in the analysis are also described. In general, the overall methodology is designed to address the considerations described in the Regulatory Guides 1.174 and 1.177. However, this is a one-time extension request and as such is not a permanent change to the plant, thus the approach used here is somewhat different than that described in the regulatory guides. In particular, instantaneous CDF and ICCDP are the most important considerations and the values obtained in this evaluation are typical of normal maintenance conducted on site. In addition, maintenance rule configuration risk management plays an important role in this request.

Description of the CPSES PRA Model

The CPSES PRA model for internal events is an all-modes model that allows quantification of configurations to determine core damage frequency and large early release frequency at power (mode 1), in transition (modes 2 through 4) and shutdown (modes 5 and 6, shutdown address only CDF). The CPSES PRA model for internal events also includes spent fuel pool modeling for core-off load configurations. A description of the CPSES PRA model pedigree is provided in section 4.3.

Data Review and Model Evaluation

The scope of the existing PRA was reviewed to assure that it is adequate to evaluate this application. Two key areas were considered: (1) review aspects of the PRA model related to 6.9 kV AC electrical power to ensure high quality standards for the submittal; and (2) review the RCP seal LOCA model to ensure integrity and completeness. The 6.9 kV AC system fault tree models and reliability data for the EDGs were reviewed. This review included common cause failure parameters, unavailability parameters, failure rates, and level of detail of the system models. Similarly, the CPSES Loss of Offsite Power (LOOP) and Station Blackout (SBO) models were reviewed.

The review of the PRA model to ensure high quality standards is required for all risk-informed submittals under Regulatory Guide 1.174. The review of the RCP Seal LOCA model is required when the utility has not incorporated the Brookhaven RCP Seal LOCA model. For this submittal, TXU reviewed the EDG reliability data, the Loss of Offsite Power and Station Blackout sequences, and the RCP seal LOCA model using the Westinghouse Owners Group certification guidelines. The key areas reviewed are summarized below.

1. The 6.9 kV AC system fault tree models and reliability data for the EDGs were reviewed against the WOG review criteria. Minor modifications to the models and enhancements to the documentation needed to meet the PRA quality review criteria described later in this section.

2. The CPSES Loss of Offsite Power (LOOP) and Station Blackout (SBO) models were also reviewed. Specifically, the LOOP frequency, LOOP recovery models, and the LOOP/SBO

event trees were reviewed against the WOG review criteria. It was concluded that the LOOP and SBO modeling are detailed and appropriate. Additionally, the impact of a higher LOOP initiating event frequency was evaluated and it was concluded that although the risk of both full power and shutdown will increase linearly (with an increase in initiating event frequency), the delta between power and shutdown will remain constant. Therefore, the increased LOOP initiating event frequency does not change the conclusion of the evaluation and the proposed CT extension.

3. It was confirmed that the existing RCP seal LOCA model contains all of the failure modes identified in the USNRC-approved Brookhaven RCP Seal LOCA model. The impact of using the Brookhaven RCP Seal LOCA model was then examined as a sensitivity analysis. This sensitivity analysis showed an increase in the baseline risk if the Brookhaven RCP Seal LOCA model is used. The use of the revised RCP seal LOCA model would cause an increase in risk for the full power plant state but would have no impact on the cold shutdown (Modes 5 and 6) plant states. Thus, the conclusions of this study remain unchanged and the proposed one time CT extension is supported.

PRA Model Modifications

The Safety Monitor™ computer program was used to allow for easier quantification of various configurations required to support this submittal. Baseline comparisons of the Safety Monitor model baseline results and the CPSES PRA model (evaluated using the EPRI- CAFTA™ code) baseline results were completed and indicated good correlation between the two quantification methods.

During the evaluation process, the quantification runs that were performed to calculate CDF and LERF values were based on no test and maintenance values. In addition, to support the analysis, the data associated with certain basic events in the shutdown model were revised to allow the model to evaluate only the risk associated with damage to the fuel in the reactor vessel and to not consider the fuel in the fuel pool. The plant response modeling for the Spent Fuel Pool is bounded by the CPSES PRA internal events model since the Loss of Offsite Power and Station Blackout modeling contains the same progression.

The CPSES PRA internal events model does not include contributions from internal fires, internal floods, seismic events and other external events. However, due to the common cause nature of these events and the fact that the increased CT only impacts risk contributions of independent component unavailabilities, inclusion of floods, fires and external events would not impact the conclusions of this evaluation. While such contributions, if added would make small contributions to the base CDF, the change in CDF or LERF due to the increased CT would be unaffected.

Analysis Assumptions

The following assumptions were used in performing the analysis:

- The incremental CDF and LERF are calculated by assuming the affected component is in maintenance for the entire CT duration.

- The CT extension for XST2 is used on a one-time basis. The increase in CDF and LERF as a result of the change is therefore the ICCDP and ICLERP for the configuration calculated below.

- The CPSES Loss of Offsite Power and RCP seal LOCA model are the base case. The existing RCP seal LOCA model contains all of the failure modes identified in the USNRC approved Brookhaven RCP Seal LOCA model. Sensitivity studies will examine the impact of implementing the Brookhaven RCP seal LOCA model and evaluating the impact of varying Loss of Offsite Power initiating event frequency.

- The impact of the proposed CT change is evaluated by the CPSES PRA internal events model. Basic events in the shutdown model are revised to allow the model to evaluate only the risk associated with damage to the fuel in the reactor vessel and to not consider the fuel in the fuel pool. The plant response modeling for the Spent Fuel Pool is bounded by the CPSES PRA internal events model since the Loss of Offsite Power and Station Blackout modeling contains the same progression.

Evaluation Criteria

The guidance suggested in Regulatory Guides 1.174 and 1.177 (References 4 and 5) was used to determine the effect of the proposed allowed CT extension. Thus, the following risk metrics were used to evaluate the risk impacts of extending the CT.

ICCDP = The incremental conditional core damage probability with XST2 out-of-service for a period equal to the proposed new CT. This risk metric is used as suggested in RG 1.177 to determine whether a proposed increase in CT has an acceptable risk impact.

ICLERP = The incremental conditional large early release probability with XST2 out-of-service for a period equal to the proposed new CT. RG 1.177 criteria are also applied to judge the significance of changes in this risk metric.

The evaluation was based on the assumption that the extended CT will be used on a one-time basis.

The incremental conditional core damage probability (ICCDP) and incremental conditional large early release probability (ICLERP) are computed per the definitions from RG 1.177 (Reference 5). In terms of the parameters defined above, the definition of ICCDP is as follows:

$$ICCDP_{xA} = (CDF_{xAOOS} - CDF_{xBASE})T_{CT}$$

$$ICCDP_{xA} = (CDF_{xAOOS} - CDF_{xBASE}) * (21days) * (365days/year)^{-1}$$

$$ICCDP_{xA} = (CDF_{xAOOS} - CDF_{xBASE}) * 5.75x10^{-2}/year$$

Note that in the above formula 365 days/year is merely a conversion factor to make the units for CT consistent with the units for CDF frequency. The ICCDP values are dimensionless incremental probabilities of a core damage event over a period of time equal to the extended CT. This should not be confused with the evaluation of DCDFxAVE in which the CDF is averaged over an 18-month refueling cycle.

Similarly, ICLERP is defined as follows.

$$ICLERP_{xA} = (LERF_{xAOOS} - LERF_{xBASE}) * 5.75x10^{-2}/year$$

4.2.2 Evaluation

The CPSES PRA internal events model was used to evaluate the XST2 CT extension. All of the runs were quantified using the Safety Monitor™ computer program and the updated CPSES internal events model.

- Baseline CDF with no test and maintenance for all components before and after the proposed CT.
- Baseline LERF with no test and maintenance for all components before and after the proposed CT.
- Conditional Core Damage Probability was evaluated out of service for the proposed CT.
- Conditional Large Early Release Probability was evaluated for the proposed CT.

The incremental CDF and LERF were calculated while exercising the requested CT. This was done with the Safety Monitor™ computer program. The initial PRA analysis followed the steps listed below. Each step included calculation of the overall change in CDF and LERF as well as

the incremental change in CDF and LERF. That is, there were four risk numbers calculated for each step. The overall CDF and LERF are calculated using the no test and maintenance model. The incremental CDF and LERF were calculated by assuming XST2 is in maintenance for the entire CT duration.

1. Quantitative Full Power Internal Events and Qualitative External Events/Shutdown Check. The CT submittal development initially examined a submittal based on a quantitative analysis of Full Power internal events only.

2. Quantitative Check of Transition Risk to/from Shutdown. The transition risk model used to support this analysis evaluated the impact of requiring shutdown to mode 5 conditions to perform the maintenance. Then the risk associated with on-line maintenance while the corrective action is being performed is compared with the risk associated with the transition to shutdown with the component being unavailable, plus the risk associated with conducting the maintenance while in mode 5, and the risk associated with the transition back to full power (mode 1).

Evaluation of XST2 CT

The proposed CT evaluated for the startup transformers is 21 days. This evaluation was done using the methodology described above. The equations defined under section 4.2.1 were used for the evaluations cases described below.

An evaluation of risk associated with a startup transformer outage with the plant in a shutdown condition was also performed. The startup transformers feed both Unit 1 and Unit 2; therefore, simultaneous outages on both units are not normally scheduled. This was evaluated because it is the plant condition that is required by technical specifications for such extended maintenance. That is, if XST2 is to be taken out of service for a period of time in excess of the TS CT, then both units must be in cold shutdown.

If the XST2 startup transformer is taken out of service for maintenance, it affects both units since transformer XST2 also functions as a back-up to XST1. The increase in risk results in an additional CDF contribution of approximately 1.90E-6/year and an additional LERF contribution of approximately 2.79E-8/year. The at power ICCDP and ICLERP values calculated are shown below. The subscripts for ICCDP and ICLERP shown below represent the case numbers from Table 1, located at the end of this section.

$ICCDP_{104A} = 1.09E-7$
$ICLERP_{104A} = 2.42E-9$

The risk increase associated with this proposed CT extension is considered small, according to the guidelines contained in Regulatory Guide 1.177. In addition, based on the risk graphs in

Regulatory Guide 1.174, these values indicate that the change in core damage probability and large early release probability is not considered significant when startup transformer maintenance is completed at power.

At Power,
ICCDP = 1.09E-7 and ICLERP = 2.42E-9

During a Maintenance Shutdown the following plant states,

ICCDP = 3.98E-8	ICLERP = 3.69E-10	Mode 3 Hot Standby (Early)
ICCDP = 3.36E-8	ICLERP = 5.72E-10	Mode 4 Hot Shutdown (Early)
ICCDP = 1.23E-4		Mode 5 Cold Shutdown
ICCDP = 2.86E-8	ICLERP = 3.85E-9	Mode 4 Hot Shutdown (Late)
ICCDP = 5.59E-8	ICLERP = 5.21E-10	Mode 3 Hot Standby (Late)
ICCDP = -3.9E-9	ICLERP =4.52E-11	Mode 2 Reactor Startup

$ICCDP_{MAINTOUT}$ = 1.23E-4 $ICLERP_{MAINTOUT}$ = 5.26E-9 (not including Mode 5)

The results of these analyses allow a comparison of the change in risk for conducting 21 day maintenance outage on XST2 at power with the risk of conducting the same maintenance in mode 5 following a controlled shutdown. It indicates that the net change in core damage probability is reduced when XST2 maintenance is completed at power rather than during a planned shutdown and therefore presents a lower overall risk. It should also be noted that the ICCDP from mode 1 to mode 4 and back up (i.e., the transition risk) is of the same magnitude as performing the maintenance at power.

4.2.3 Sensitivity Studies

In the past, TXU reviewed the Loss of Offsite Power using the Westinghouse Owners Group certification guidelines. The associated sensitivity studies performed at that time were conducted using a previous version of the model; however, the model version differences are minor and do not affect conclusions. Results of the sensitivity study and its applicability to this evaluation are summarized below.

Sensitivity Cases – Offsite Power Initiating Event Frequency

Sensitivity cases were run to determine the effect of a higher Loss of Offsite Power initiating event frequency. The normal value for INIT-X3 is 0.0395/year and for the sensitivity analysis, this value was changed to 0.052/year. The value used for the sensitivity was the frequency used by another plant in this region and is on the higher end of the Loss of Offsite Power initiating event frequencies cited in NUREG/CR-5496, Evaluation of Loss of Offsite Power Events at Nuclear Power Plants: 1980-1996, November 1998. The results showed that the CDF rises as the Loss of Offsite Power initiator frequency is increased. A higher loss of offsite power initiating event frequency affects both full power and shutdown. Since both the full power and shutdown risk increase linearly, the delta between full power and shutdown risk remains relatively constant. Thus, an increased loss of offsite power initiating event frequency does not change the conclusions of this analysis and the proposed CT extension is supported.

4.2.4 Restriction on High Risk Configuration

To avoid or reduce the potential for risk-significant configurations from either emergent or planned work, CPSES has put in place a set of administrative guidelines that go beyond the limitations set forth in the plant Technical Specifications. These guidelines control configuration risk by assessing the risk impact of equipment out-of-service during all modes of operation to assure that the plant is always being operated within acceptable risk guidelines.

CPSES employs a conservative approach to at power maintenance. The weekly schedules are train/channel based and prohibit the scheduling of opposite train activities without additional review, approvals and/or compensatory actions. The assessment process further minimizes risk by restricting the number and combination of systems/trains allowed to be simultaneously unavailable for scheduled work.

Unplanned or emergent work activities are factored into the plant's actual and projected condition, and the level of risk is evaluated. Based on the result of this evaluation, decisions pertaining to what action, if any, are required to achieve an acceptable level of risk (component restoration or invoking compensatory measures) are made. The unplanned or emergent work activities are also evaluated to determine impact on planned activities and the affect the combinations would have on risk.

Technical Specification 5.5.18, "Configuration Risk Management Program (CRMP)," will apply

to this license amendment request and is repeated below for information:

The Configuration Risk Management Program (CRMP) provides a proceduralized risk-informed assessment to manage the risk associated with equipment inoperability. The program applies to technical specification structures, systems, or components for which a risk-informed CT has been granted. The program shall include the following elements:

a. Provisions for the control and implementation of a Level 1, at-power, internal events PRA-informed methodology. The assessment shall be capable of evaluating the applicable plant configuration.

b. Provisions for performing an assessment prior to entering the LCO Action for preplanned activities.

c. Provisions for performing an assessment after entering the LCO Action for unplanned entry into the LCO Action.

d. Provisions for assessing the need for additional actions after the discovery of additional equipment out of service conditions while in the LCO Action.

e. Provisions for considering other applicable risk significant contributors such as Level 2 issues, and external events, qualitatively or quantitatively.

Risk Significant Components Given a Startup Transformer is out of Service

The following provides a list of the risk significant components and /or systems given that a Startup Transformer is out of service. The list provides those components and / or systems whose simultaneous unavailability would likely place the plant in a high-risk configuration, based upon quantitative and deterministic analysis. These are not necessarily in ranked order.

- Electric Power – AC and DC power distribution, both trains
- The redundant Startup Transformer
- Service Water - Both trains
- Emergency Diesel Generators

4.2.5 Summary of Results and Conclusions of Risk Evaluation

The probabilistic evaluations presented above support the CT extension request for startup transformer XST2. The results of the evaluations presented herein justify extending the CT for XST2.

If a startup transformer is taken out of service for maintenance, it affects both units since transformer XST1 functions as a back-up to XST2. The increase in risk results in an additional CDF contribution of approximately 1.90E-08/year and an additional LERF contribution of approximately 3.28E-09/year. The risk increase associated with this proposed CT extension is considered small, according to the guidelines contained in Regulatory Guide 1.174. Based on the risk graphs in Regulatory Guide 1.174, these values indicate that the change in core damage probability and large early release probability is not considered significant when startup transformer maintenance is completed at power.

Finally, the risk associated with a plant shutdown to perform emergent corrective maintenance is an order of magnitude higher than keeping the plant at power to perform the maintenance. The net change in core damage probability is reduced when startup transformer maintenance is completed at power rather than during a forced shutdown and therefore presents a lower overall risk.

Summary

TXU Electric has concluded, based on the considerations discussed above, that: (1) there is reasonable assurance that the health and safety of the public will not be endangered by operation in the proposed manner; (2) such activities will be conducted in compliance with the Commission's regulations; and (3) the issuance of the amendments will not be inimical to the common defense and security or to the health and safety of the public.

Table 1 – Comanche Peak Startup Transformer CT Extension PRA Results Summary

UNIT 1	CDF	BASE CDF	ΔCDF	TIME (Hrs)	CCDP	ICCDP	LERF	BASE LERF	ΔLERF	TIME (Hrs)	CLERP	ICLERP
MODE												
3	3.07E-05	1.02E-05	2.05E-05	17	5.96E-08	3.98E-08	6.33E-07	4.43E-07	1.90E-07	17	1.23E-09	3.69E-10
4	2.86E-05	1.02E-05	1.84E-05	16	5.22E-08	3.36E-08	7.56E-07	4.43E-07	3.13E-07	16	1.38E-09	5.72E-10
5	2.14E-03	1.02E-05	2.13E-03	504	1.23E-04	1.23E-04	0.00E+00	4.43E-07	-4.43E-07	504	0.00E+00	0.00E+00
4	3.11E-05	1.02E-05	2.09E-05	12	4.26E-08	2.86E-08	3.25E-06	4.43E-07	2.81E-06	12	4.45E-09	3.85E-09
3	3.06E-05	1.02E-05	2.04E-05	24	8.38E-08	5.59E-08	6.33E-07	4.43E-07	1.90E-07	24	1.73E-09	5.21E-10
2	7.87E-06	1.02E-05	-2.33E-06	12	1.08E-08	-3.19E-09	4.10E-07	4.43E-07	-3.30E-08	12	5.62E-10	-4.52E-11
TOTAL					1.23E-04	1.23E-04					9.36E-09	5.26E-09
IF WORK DONE IN MODE 1	1.21E-05	1.02E-05	1.90E-06	504	6.96E-07	1.09E-07	4.85E-07	4.43E-07	4.20E-08	504	2.79E-08	2.42E-09
UNIT 2												
MODE												
3	3.02E-05	9.77E-06	2.04E-05	17	5.86E-08	3.96E-08	6.28E-07	4.38E-07	1.90E-07	17	1.22E-09	3.69E-10
4	3.08E-05	9.77E-06	2.10E-05	16	5.63E-08	3.84E-08	7.55E-07	4.38E-07	3.17E-07	16	1.38E-09	5.79E-10
5	2.14E-03	9.77E-06	2.13E-03	504	1.23E-04	1.23E-04	0.00E+00	4.38E-07	-4.38E-07	504	0.00E+00	0.00E+00
4	3.08E-05	9.77E-06	2.10E-05	12	4.22E-08	2.88E-08	3.25E-06	4.38E-07	2.81E-06	12	4.45E-09	3.85E-09
3	3.01E-05	9.77E-06	2.03E-05	24	8.25E-08	5.57E-08	6.28E-07	4.38E-07	1.90E-07	24	1.72E-09	5.21E-10
2	7.48E-06	9.77E-06	-2.29E-06	12	1.02E-08	-3.14E-09	4.05E-07	4.38E-07	-3.30E-08	12	5.55E-10	-4.52E-11
Total					1.23E-04	1.23E-04					9.33E-09	5.28E-09
IF WORK DONE IN MODE 1	1.17E-05	9.77E-06	1.93E-06	504	6.73E-07	1.11E-07	4.74E-07	4.38E-07	3.60E-08	504	2.73E-08	2.07E-09

4.3 PRA Quality

The following milestones in the development of the CPSES PRA assure the analysis is sufficient to adequately provide risk insights in support of regulatory applications. The results of this history and the current evaluation for suitability in this application show that the CPSES PRA is appropriate for use in the CPSES Risk-Informed extension of CT for the XST2 startup transformer.

PRA Model Update History

To ensure a high-quality PRA and to provide quality control to the PRA Process, two types of independent reviews were conducted during the development of the PRA model used to support the Individual Plant Examination (IPE) submittal. One was done internally by TXU staff, and the other was done externally by outside PRA experts. In general, both reviews were applied to the entire examination process except when it was not possible due to the availability of resources or required skills. In those few cases, as a minimum, each task was reviewed thoroughly by either an internal or external independent reviewer. Furthermore, a final independent review was performed after the IPE study was completed. A team of PRA experts was selected from the industry to independently review the entire IPE study and its supporting analyses. The review team spent one week at the TXU offices where documents, procedures and supporting calculations and analyses were available for use. The results of all independent review activities performed by internal and external reviewers were well documented as part of the IPE documentation requirements.

As mentioned above, one of the main objectives of the original CPSES PRA development was to be able to utilize its results and insights toward the enhancement of plant safety through risk-based applications. With this objective in mind, the PRA elements were developed in detail and integrated in a manner sufficient to satisfy both the NRC Generic Letter 88-20 requirements and support future plant applications. In order to use the PRA for future plant applications, it was recognized that the PRA had to be of high quality, and that the assumptions within the PRA had to be supportable. In order to maintain the level of quality needed to support risk-informed applications, significant enhancements to the original IPE work were made.

The PRA model has been updated several times since the original IPE submittal. The current PRA model includes modeling enhancements that were identified as part of an overall model update, and insights gained when using the PRA model in support of several previous risk-informed initiatives. The first major update to the PRA was performed in 1996 and 1997 when the original IPE model was revised to support a linked fault tree model. By revising the top logic (event tree/fault tree interface) to support a linked fault tree model, the effort required to requantify the PRA was reduced substantially. Subsequently, the usefulness of the PRA rose dramatically.

A second major revision to the PRA model occurred when the model was modified to allow it to

be used by the Safety Monitor software for on-line risk monitoring. Although the modeling changes made to support the development of a Safety Monitor™ compatible model were primarily "cosmetic" in nature, some modeling inconsistencies and system alignment issues were identified and the model was revised to address these issues.

In 1998, a large effort was undertaken to ensure the PRA system level models were done consistently, and that the models were symmetric between trains. The focus of this effort was to ensure consistency between the PRA system level models, including ensuring the newly developed system models were adequate to support upcoming risk informed activities. In addition, this update included reviewing plant-specific operational data in order to update component failure rates, initiating event frequencies, human error probabilities, and recovery probabilities. An initial update to the PRA model was completed in February 2000; however, additional modeling enhancements were identified when the PRA model was used to support risk-informed activities in the first and second quarters of 2000.

A subsequent update of the PRA model was accomplished in July 2001 and is the basis for this submittal. The current PRA model includes the modeling updates performed to support each of the efforts mentioned above, and also includes modifying the models to include the enhancements identified during the risk-informed application process and other reviews. The current model is the dual unit model which models the differences between the two units and provides logic rather than point estimates for opposite unit support systems.

In each of these efforts, there was a significant amount of work done to enhance the fault tree modeling, both at the system level and in the top logic. These enhancements include changes that:

- Updated the PRA model to reflect as-built changes since 1992
- Updated the Thermal-Hydraulics analysis used to develop accident sequences, including using MAAP 4.0 vs. MAAP 3.0 to evaluate the postulated scenarios
- Updated component failure rates and unavailabilities with plant-specific data where available
- Updated the initiating event frequencies with plant-specific data where available
- Updated the model to reflect updated industry initiating events, in particular LOCA frequencies
- Updated the model to reflect more systematic recovery analysis and application
- Revised the model structure to represent a linked fault tree for linked model quantification
- Integrated ISLOCA sequences directly into the fault tree logic
- Updated the latent human error analysis, including a detailed review and resulting reduction in human error probabilities
- Updated the dynamic and recovery analysis, including a detail review and resulting reduction in human error probabilities
- Updated the model to reflect changes to RCP seal modeling, including crediting high

temperature seal leak rates and treatment of small end leakage rates as covered by normal charging

- Enhanced the documentation and level of detail associated with the 6 systems not fully developed under the original IPE effort

Current PRA Model

The CPSES PRA model is controlled and archived on the CPSES LAN and is downloaded for maintenance and applications on business computers. The model can be readily manipulated to evaluate risk impact or individual system reliability due to modifications, procedure changes, or equipment status. The model is routinely updated to ensure plant changes (including modifications, procedure changes, etc.) are accurately reflected in the PRA.

Use of PRA for RI-IST Submittal

In November 1995, CPSES submitted a request for an exemption from the requirements (testing frequency) of 10CFR50.55a(f)(4)(I) and (ii). This request is commonly referred to the Risk Informed In-Service Testing (RI-IST) submittal. Specifically, CPSES requested approval to utilize a risk-based in-service testing program to determined in-service test frequencies for valves and pumps that are identified as less safety significant, in lieu of testing those components per the frequencies specified by the AMSE code. As part of this effort the PRA model of record at that time was reviewed using the EPRI PRA Applications Guide and found to be suitable for a Risk-Informed In-Service Testing application. This review evaluated the questions posed in the EPRI PRA Applications Guide (text and Appendix B). These questions included problem definition, scope, figures of merit, analysis, decision criteria, initiating events, success criteria, event trees, system reliability models, parameter databases, dependent failure analysis, human reliability analysis, quantification, analysis of results, plant damage state classification, containment analysis, external events PRA hazards analysis, and shutdown PRA considerations.

In August 1998, the USNRC provided a Safety Evaluation Report to CPSES with respect to the RI-IST request, and approved the request. As part of their review of the RI-IST submittal, the NRC performed an in-depth review of the CPSES PRA model of record at that time, the original IPE and IPEEE submittals. The focus of the NRCs review was to establish that the CPSES PRA appropriately reflected the plant's design and actual operating conditions and practices, and that there was a suitable technical basis to support the PRA-related findings made to support the Safety Evaluation Report (SER).

To reach specific findings regarding the quality of the PRA, a focused-scope evaluation was performed that concentrated on elements of the PRA affected by the RI-IST application, and on the assumptions and elements of the PRA model which drive the results and conclusions. As a result of their in-depth evaluation, the USNRC found the quality of the Comanche Peak PRA acceptable for the 1998 RI-IST submittal. Since that time, the PRA has been updated and improved further, by means of an update process that incorporates review steps.

4.4 Conclusion

The proposed changes will continue to provide adequate protection of public health and safety and common defense and security as described below. The changes advance the objectives of the NRC's Probabilistic Risk Assessment (PRA) Policy Statement (Reference 3), for enhanced decision-making and result in a more efficient use of resources and reduction of unnecessary burden. Implementation of this proposed Completion Time extension will provide the following benefits.

- Allow better control and allocation of resources.
- Allowing on-line maintenance, including overhauls, provides the flexibility to focus more quality resources on any required or elected EDG or ST maintenance.
- The requested completion time of 21 days is longer that the preplanned maintenance duration of 14 days to ensue the planned work can be completed.
- Avert unplanned plant shutdowns.
- Risks incurred by unexpected plant shutdowns can be comparable to and often exceed those associated with continued power operation.
- Improve ST availability during shutdown Modes or Conditions.

The results of TXU probabilistic evaluations support extension of the Completion Time for the offsite circuit startup transformers to 21 days. In addition, probabilistic risk assessments indicate that these activities may be performed with both units at steady state power while resulting in an insignificant impact to overall station risk.

Performing Startup Transformer XST2 maintenance during power operation will allow for the highest probability of steady-state station conditions during the period in which the transformer's integrity is being enhanced through the completion of prudent preventative maintenance activities.

Current CPSES procedures (CRMP) require contingency planning and risk assessments to be performed when removing any safety-related or TS-required piece of equipment from service. CPSES has performed a probabilistic risk assessment (PRA) in order to calculate the associated increase in risk given a 21-day outage window for XST2 and both units operating at power simultaneously. The resultant increase in risk fell into NRC Risk Region III ("Very Small Change") and it has been therefore concluded that the 21-day outage window for XST2 is acceptable.

Unavailability of a single offsite source due to maintenance does not reduce the number of required power sources below the minimum required to mitigate all DBAs. In addition, the proposed changes have no impact on the availability of the on-site sources of power. The effect on FSAR acceptance criteria has been assessed assuming that one offsite circuit on each unit is out of service due to the proposed XST2 transformer maintenance and no additional failures on

during the maintenance occur. All safety functions continue to be available and acceptance criteria are met.

5.0 REGULATORY ANALYSIS

5.1 No significant Hazards Determination

TXU Electric has evaluated whether or not a significant hazards consideration is involved with the proposed changes by focusing on the three standards set forth in 10CFR50.92 as discussed below:

1. Do the proposed changes involve a significant increase in the probability or consequences of an accident previously evaluated?

   Response: No

   The proposed one time Technical Specification Completion Time extension does not significantly increase the probability of occurrence of a previously evaluated accident because the startup transformer XST2 is not an initiator of previously evaluated accidents involving a loss of offsite power. The proposed changes to the Technical Specification CT do not affect any of the assumptions used in the deterministic or the Probabilistic Safety Assessment (PSA) analysis relative to loss of offsite power initiating event frequency.

   The proposed one time Technical Specification CT extension will continue to provide assurance that the sources of power to 6.9 kV AC components perform their function when called upon. Extending the Technical Specification CT to 21 days does not affect the design of XST2, the operational characteristics of XST2, the interfaces between XST2 and other plant systems, the function, or the reliability of XST2. Thus, 6.9 kV AC components will be capable of performing either accident mitigation function and there is no impact to the radiological consequences of any accident analysis.

   To fully evaluate the effect of the proposed change, Probabilistic Safety Analysis (PSA) methods and deterministic analysis were utilized. The results of this analysis show no significant increase in the Core Damage Frequency.

   The Maintenance Rule (a)(4) risk management program assesses risk based on plant status. It requires the consideration of other measures to mitigate consequences of an accident occurring while a ST is unavailable.

   The proposed changes do not alter the operation of any plant equipment assumed to function in response to an analyzed event or otherwise increase its failure probability. Therefore, these changes do not involve a significant increase in the probability or consequences of any accident previously evaluated.

2. Do the proposed changes create the possibility of a new or different kind of accident from any accident previously evaluated?

   Response: No

   These proposed changes do not change the design, configuration, or method of operation of the plant. The proposed activity involves a change to the allowed plant mode for the performance of preventive maintenance that will ensure the inherent reliability of the XST2 Startup Transformer is maintained. No physical or operational change to the ST or supporting systems are made by this activity. Since the proposed change does not involve a change to the plant design or operation, no new system interactions are created by this change. The proposed Technical Specification change does not produce any parameters or conditions that could contribute to the initiation of accidents different from those already evaluated in the Final Safety Analysis Report.

   The proposed change only addresses the time allowed to restore the operability of XST2. Thus the proposed Technical Specification change does not create the possibility of a new or different kind of accident from any accident previously evaluated.

3. Do the proposed changes involve a significant reduction in a margin of safety?

   Response: No

   The proposed change does not affect the Limiting Conditions for Operation or their Bases that are used in the deterministic analysis to establish any margin of safety. PSA evaluations were used to evaluate the proposed change, and these evaluations determined that the net changes are either risk neutral or risk beneficial. The proposed activity involves a one time change to Allowed Outage Times.

   The proposed change does not involve a change to the plant design or operation and thus does not affect the design of the ST, the operation characteristics of the ST, the interfaces between the ST and other plant systems, or the function or reliability of the ST. Because ST performance and reliability will continue to be ensured by the proposed one time Technical Specification change, the proposed changes do not result in a reduction in the margin of safety.

   Therefore the proposed change does not involve a reduction in a margin of safety.

Based on the above evaluations, TXU Electric concludes that the activities associated with the above described change presents no significant hazards consideration under the

standards set forth in 10CFR50.92 and accordingly, a finding by the NRC of no significant hazards consideration is justified.

5.2 Applicable Regulatory Requirements / Criteria

USNRC, "Final Policy Statement on Technical Specification Improvements for Nuclear Power Reactors," Federal Register, 58 FR 39132, July 22, 1993.

USNRC, 10 CFR 50.36, "Technical Specifications," Federal Register, 60 FR 36953, July 19, 1995.

NUREG 1431, "Standard Technical Specifications Westinghouse Plants, Rev. 1, April 1995)

GDC 5 - Sharing of Structures, Systems, and Components, "Structures, systems, and components important to safety shall not be shared between nuclear power units unless it can be shown that such sharing will not significantly impair their ability to perform their safety functions including, in the event of an accident in one unit, an orderly shutdown and cooldown of the remaining unit."

GDC 17 - An onsite electric power system and an offsite electric power system shall be provided to permit functioning of structures, systems, and components important to safety. The safety function for each system (assuming the other system is not functioning) shall be to provide sufficient capacity and capability to assure that (1) specified acceptable fuel design limits and design conditions of the reactor coolant pressure boundary are not exceeded as a result of anticipated operational occurrences, and (2) the core is cooled and containment integrity and other vital functions are maintained in the event of postulated accidents. The onsite electric power sources, including the batteries, and the onsite electrical distribution system, shall have sufficient independence, redundancy, and testability to perform their safety functions, assuming a single failure. Electric power from the transmission network to the onsite electric distribution system shall be supplied by two physically independent circuits (not necessarily on separate rights of way) designed and located so as to minimize to the extent practical the likelihood of their simultaneous failure under operating and postulated accident and environmental conditions. A switchyard common to both circuits is acceptable. Each of these circuits shall be designed to be available in sufficient time following a loss of all onsite alternating current power supplies and the other offsite electrical power circuit, to assure that specified acceptable fuel design limits and design conditions of the reactor coolant pressure boundary are not exceeded. One of these circuits shall be designed to be available within a few seconds following a-loss-of-coolant accident to assure that core cooling, containment integrity, and other vital safety functions are maintained. Provisions shall be included to minimize the probability of losing electric power from any of the remaining supplies as a result of, or coincident with, the loss of power generated by the nuclear power unit, the loss of power from the transmission network, or the loss of

power from the onsite electrical power supplies.

GDC 18 – Inspection and Testing of Electric Power System, Electric power systems important to safety shall be designed to permit appropriate periodic inspection and testing of important areas and features, such as wiring, insulation, connections, and switchboards, to assess the continuity of the systems and the condition of their components. The systems shall be designed with a capability to test periodically (1) the operability and functional performance of the components of the systems, such as onsite power sources, relays, switches, and buses and (2) the operability of the systems as a whole and, under conditions as close to design as practical, the full operational sequence that brings the systems into operation, including operation of applicable portions of the protection system and the transfer of power among the nuclear power unit, the offsite power system, and the onsite power system [1]."

NRC Safety Guide 6, dated March 10, 1971, titled "Independence Between Redundant Standby (onsite) Power Sources and Between Their Distribution Systems."

NRC Safety Guide 9, dated March 10, 1971, titled "Selection of Diesel Generator Set Capacity for Standby Power Supplies."

NRC Regulatory Guide 1.53, dated June 1973, "Applicability of Single-Failure Criterion to Nuclear Power Plant Protection Systems."

NRC Regulatory Guide 1.62, dated October, 1973, titled "Manual Initiation of Protective Actions."

NRC Regulatory Guide 1.75, Revision 1, dated January 1975, titled "Physical Independence of Electrical Systems."

NRC Regulatory Guide 1.81, Revision 1, dated January 1975, titled "Shared Emergency and Shutdown Electric Systems for Multi-unit Nuclear Power Plants." Comanche Peak Station conformance with Regulatory Guide 1.81, Revision 1 is described in detail in Appendix 1A(B) to the FSAR (Reference 1). The Regulatory Guide guidance is to disallow "normal" sharing of systems such that "a reduction in the number and capacity of the on-site power sources to levels below those required for the same number of units located at separate sites," would not result.

NRC Regulatory Guide 1.93, "Availability of Electric Power Sources," December 1974

NRC Regulatory Guide 1.108, "Periodic Testing of Diesel Generators Used as Onsite Electric Power Systems at Nuclear Power Plants," Revision 1 (8/77)

NRC Regulatory Guide 1.155, "Station Blackout," dated August 1988

5.2.1 Analysis

GDC 17:

The primary requirement of concern is GDC 17.
The safety-related systems are designed with sufficient capacity, independence, and redundancy to ensure performance of their safety functions assuming a single failure. The offsite electrical power system also provides independence and redundancy to ensure an available source of power to the safety-related loads.

Upon loss of the preferred power source to any 6.9 kV Class 1E bus, the alternate power source is automatically connected to the bus and the diesel generator starts should the alternate source not return power to the Class 1E buses. Loss of both offsite power sources to any 6.9 kV Class 1E bus, although highly unlikely, results in the diesel generator providing power to the Class 1E bus.

Two independent diesel generators and their distribution systems are provided for each unit to supply power to the redundant onsite AC Power System. Each diesel generator and its distribution system is designed and installed to provide a reliable source of redundant onsite-generated (standby) AC power and is capable of supplying the Class 1E loads connected to the Class 1E bus which it serves.

Safety Guide 6:

These proposed changes do not add or reclassify any safety-related systems or equipment; therefore, conformance with Safety Guide 6, dated March 10, 1971, titled "Independence Between Redundant Standby (onsite) Power Sources and Between Their Distribution Systems," (Reference 7) as discussed in Appendix 1A(B) of the FSAR (Reference 1) is not affected by this change.

Redundant parts within the AC and DC systems are physically and electrically independent to the extent that a single event or single electrical fault can not cause a loss of power to both Class 1E load groups.

Safety Guide 9:

These proposed changes do not add any loads to the EDGs; therefore, the selection of the capacity of the EDGs for standby power systems and conformance to the applicable Sections of Safety Guide 9, dated March 10, 1971, titled "Selection of Diesel Generator Set Capacity for Standby Power Supplies," (Reference 8) are not affected by this change.

Regulatory Guide 1.93:

The current Completion Times associated with inoperable AC power source(s) are intended to minimize the time an operating plant is exposed to a reduction in the number of available AC power sources. NRC Regulatory Guide (RG) 1.93, "Availability of Electric Power Sources," December 1974, (Reference 2) is referenced in the TS Bases for Actions associated with TS Section 3.8.1. RG 1.93 provides operating restrictions (i.e., Completion Times) that the NRC considers acceptable if the number of available AC power sources are less than the LCO. Specifically, "if the available ac power sources are one less than the number required by the TS LCO, power operation may continue for a period that should not exceed 72 hours if the system stability and reserves are such that a subsequent single failure (including a trip of the unit's generator, but excluding an unrelated failure of the remaining offsite circuit if this degraded state was caused by the loss of an offsite source) would not cause total loss of offsite power."

Conformance with Regulatory Guide 1.93 is affected by these proposed change. According to Regulatory Guide 1.93, operation may continue with one offsite circuit inoperable for a period that should not exceed 72 hours. Aside from the exception discussed above, the station currently conforms to the RG. If the proposed change is approved, the stations will continue to conform to RG 1.93 with the exception that, for the proposed XST2 prevent maintenance outage, the allowed Completion Time for restoration of an offsite circuit will be increased to 21 days.

The proposed extended Completion Times does not change the compliance with the above general design criteria and regulatory requirement, other than the deviations from Regulatory Guide 1.93 and NUREG 1431 discussed in Section 4, "Technical Analysis," above.

Other Requirements/Criteria:

Commitments to other key design criteria applicable to onsite electrical systems that would be unaffected by these proposed changes include: Regulatory Guide 1.53, dated June 1973, titled, "Application of Single-Failure Criterion to Nuclear Power Plant Protection Systems," (Reference 10) Regulatory Guide 1.62, dated October, 1973, titled "Manual Initiation of Protective Actions," (Reference 11) and Regulatory Guide 1.75, Revision 1, dated January 1975, titled "Physical Independence of Electrical Systems" (Reference 12).

As discussed in the previous section, conformance with relevant regulatory guidance is not affected by this proposed change, with the exception of Regulatory Guide (RG) 1.93. The RGs cited in the previous section endorse industry standards.

5.2.2 Conclusion

The technical analysis performed by TXU Electric in Section 4, "Technical Analysis,"

demonstrates the ability of the 6.9 kV AC components (emergency diesel generator, startup transformer, and safety bus) to perform their safety function. The increased Completion Times continue to comply with the above regulatory requirements.

Safety analysis acceptance criteria in the FSAR continue to be met. The proposed changes do not affect any assumptions or inputs to the safety analyses.

6.0 ENVIRONMENTAL CONSIDERATION

TXU Electric has determined that the proposed amendment would change requirements with respect to the installation or use of a facility component located within the restricted area, as defined in 10CFR20, or would change an inspection or surveillance requirement. TXU Electric has evaluated the proposed change and has determined that the change does not involve (1) a significant hazards consideration, (2) a significant change in the types or significant increase in the amounts of any effluent that may be released offsite, or (3) a significant increase in individual or cumulative occupational radiation exposure. Accordingly, the proposed change meets the eligibility criterion for categorical exclusion set forth in 10CFR51.22(c)(9). Therefore, pursuant to 10CFR51.22(b), an environmental assessment of the proposed change is not required.

7.0 REFERENCES

1. Comanche Peak Steam Electric Station Final Safety Analysis Report, Docket Nos. 50-445 and 50-446.

2. 2NRC Regulatory Guide (RG) 1.93, "Availability of Electric Power Sources," December 1974.

3. NRC's Probabilistic Risk Assessment (PRA) Policy Statement, "Use of Probabilistic Risk Assessment Methods in Nuclear Activities: Final Policy Statement," Federal Register, Volume 60, p.42622, August 16, 1995.

4. NRC Regulatory Guide 1.174, "An Approach for Using Probabilistic Risk Assessment In Risk-Informed Decisions On Plant-Specific Changes to the Licensing Basis," July 1998.

5. NRC Regulatory Guide 1.177, "An Approach for Plant-Specific, Risk-Informed Decision making: Technical Specifications," August 1999.

6. NRC Regulatory Guide 1.155, "Station Blackout," dated August 1988

7. NRC Safety Guide 6, dated March 10, 1971, titled "Independence Between Redundant Standby (onsite) Power Sources and Between Their Distribution Systems."

8. NRC Safety Guide 9, dated March 10, 1971, titled "Selection of Diesel Generator Set Capacity for Standby Power Supplies."

9. NRC Regulatory Guide 1.81, Revision 1, dated January 1975, titled "Shared Emergency and Shutdown Electric Systems for Multi-unit Nuclear Power Plants."

10. NRC Regulatory Guide 1.53, dated June 1973, "Applicability of Single-Failure Criterion to Nuclear Power Plant Protection Systems."

11. NRC Regulatory Guide 1.62, dated October, 1973, titled "Manual Initiation of Protective Actions."

12. NRC Regulatory Guide 1.75, Revision 1, dated January 1975, titled "Physical Independence of Electrical Systems."

13. NUREG 1431, "Standard Technical Specifications Westinghouse Plants, Rev. 1, April 1995)

14. Individual Plant Examination for the Comanche Peak Steam Electric Station, (Full Power PRA), RXE-92-01A TU Electric, August 1992

15. Review of the CPSES IPE for Applicability to Risk-Based IST, Comanche Peak, 1996

16. Safety Evaluation By The Office Of Nuclear Reactor Regulation Related To The TU Electric Request To Implement A Risk-Informed Inservice Testing Program At Comanche Peak Steam Electric Station (CPSES), Units 1 And 2 Docket Numbers 50-445 And 50-446, USNRC

8.0 PRECEDENTS

There have been other Nuclear Power Plants who have requested and received similar one time CT extensions to support risk beneficial maintenance activities.

9.0 FIGURES

Figure 9-1 Comanche Peak Power Supplies to 6.9 kVAC ESF Buses

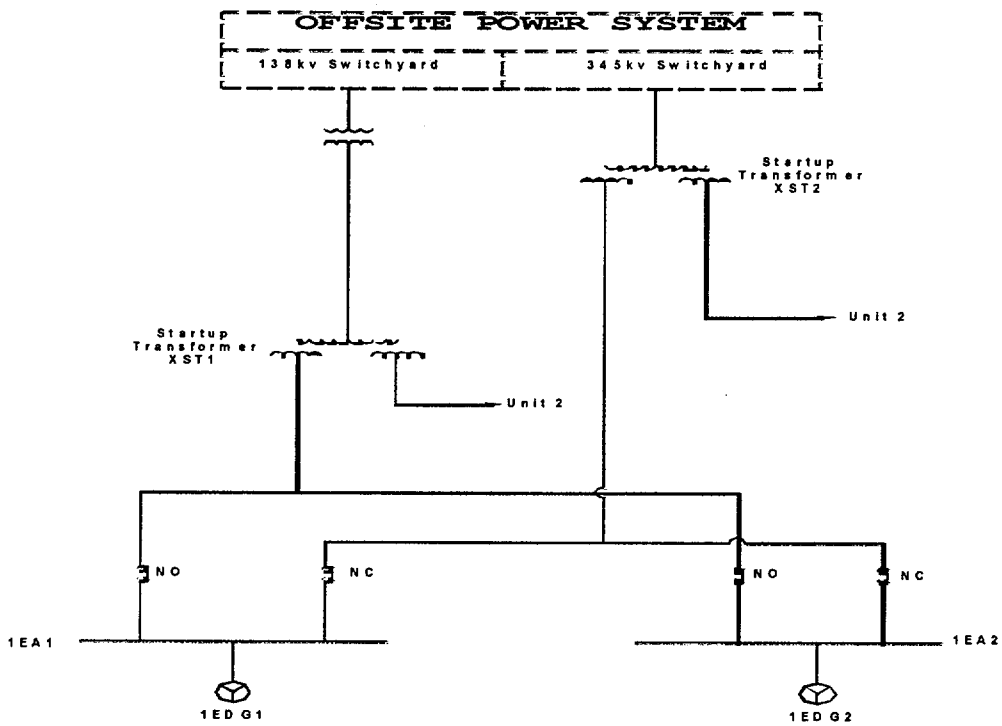

Figure 9-1 Comanche Peak Power Supplies to 6.9 kVAC ESF Buses

ATTACHMENT 3 to TXX-

MARKUP OF TECHNICAL SPECIFICATION PAGES

Pages 3.8-2
3.8-3

3.8 ELECTRICAL POWER SYSTEMS

3.8.1 AC Sources - Operating

LCO 3.8.1 The following AC electrical sources shall be OPERABLE:

a. Two qualified circuits between the offsite transmission network and the onsite Class 1E AC Electrical Power Distribution System;

b. Two diesel generators (DGs) capable of supplying the onsite Class 1E power distribution subsystem(s); and

c. Automatic load sequencers for Train A and Train B.

APPLICABILITY: MODES 1, 2, 3, and 4

ACTIONS

CONDITION	REQUIRED ACTION	COMPLETION TIME

A. One required offsite circuit inoperable.	A.1	Perform SR 3.8.1.1 for required OPERABLE offsite circuit.	1 hour AND Once per 8 hours thereafter
	AND		
		----------NOTE---------- In MODES 1, 2 and 3, the TDAFW pump is considered a required redundant feature. ----------	
	A.2	Declare required feature(s) with no offsite power available inoperable when its redundant required feature(s) is inoperable.	24 hours from discovery of no offsite power to one train concurrent with inoperability of redundant required feature(s)
	AND		
	A.3	Restore required offsite circuit to OPERABLE status.	72 hours ~~AND~~ *AND* 6 days from discovery of failure to meet LCO *OR* *21 days for a one time preventive maintenance outage on Startup Transformer XST2 to be completed by February 28, 2003*

(continued)

ATTACHMENT 4 to TXX-

MARKUP OF TECHNICAL SPECIFICATION BASES PAGES
(For Information Only)

Page B 3.8-8

BASES

ACTIONS A.3
(continued)

According to Regulatory Guide 1.93 (Ref. 6), operation may continue in Condition A for a period that should not exceed 72 hours. With one offsite circuit inoperable, the reliability of the offsite system is degraded, and the potential for a loss of offsite power is increased, with attendant potential for a challenge to the unit safety systems. In this Condition, however, the remaining OPERABLE offsite circuit and DGs are adequate to supply electrical power to the onsite Class 1E Distribution System.

The 72 hour Completion Time takes into account the capacity and capability of the remaining AC sources, a reasonable time for repairs, and the low probability of a DBA occurring during this period.

The second Completion Time for Required Action A.3 establishes a limit on the maximum time allowed for any combination of required AC power sources to be inoperable during any single contiguous occurrence of failing to meet the LCO. If Condition A is entered while, for instance, a DG is inoperable and that DG is subsequently returned OPERABLE, the LCO may already have been not met for up to 72 hours. This could lead to a total of 144 hours, since initial failure to meet the LCO, to restore the offsite circuit. At this time, a DG could again become inoperable, the circuit restored OPERABLE, and an additional 72 hours (for a total of 9 days) allowed prior to complete restoration of the LCO. The 6 day Completion Time provides a limit on the time allowed in a specified condition after discovery of failure to meet the LCO. This limit is considered reasonable for situations in which Conditions A and B are entered concurrently. The "AND" connector between the 72 hour and 6 day Completion Times means that both Completion Times apply simultaneously, and the more restrictive Completion Time must be met.

As in Required Action A.2, the Completion Time allows for an exception to the normal "time zero" for beginning the allowed outage time "clock." This will result in establishing the "time zero" at the time that the LCO was initially not met, instead of at the time Condition A was entered.

A temporary Completion Time is connected to the Completion Time requirements above (72 hours AND 6 days from discovery of failure to meet LCO) with an "OR" connector. The temporary completion time is 21 days and applies to the performance of preventive maintenance on Startup Transformer XST2. The temporary Completion Time of 21 days expires on February 28, 2002. If, during the conduct of the prescribed XST2 maintenance outage, should any combination of the remaining operable AC Sources be determined inoperable (on an individual unit

BASES

bases), current TS requirements would apply.

(continued)

ATTACHMENT 5 to TXX-

RETYPED TECHNICAL SPECIFICATION PAGES

Pages 3.8-2
3.8-3

3.8 ELECTRICAL POWER SYSTEMS

3.8.1 AC Sources - Operating

LCO 3.8.1 The following AC electrical sources shall be OPERABLE:

a. Two qualified circuits between the offsite transmission network and the onsite Class 1E AC Electrical Power Distribution System;

b. Two diesel generators (DGs) capable of supplying the onsite Class 1E power distribution subsystem(s); and

c. Automatic load sequencers for Train A and Train B.

APPLICABILITY: MODES 1, 2, 3, and 4

ACTIONS

CONDITION	REQUIRED ACTION	COMPLETION TIME

A. One required offsite circuit inoperable.	A.1	Perform SR 3.8.1.1 for required OPERABLE offsite circuit.	1 hour AND Once per 8 hours thereafter
	AND		
		----------NOTE---------- In MODES 1, 2 and 3, the TDAFW pump is considered a required redundant feature. ----------	
	A.2	Declare required feature(s) with no offsite power available inoperable when its redundant required feature(s) is inoperable.	24 hours from discovery of no offsite power to one train concurrent with inoperability of redundant required feature(s)
	AND		
	A.3	Restore required offsite circuit to OPERABLE status.	72 hours AND 6 days from discovery of failure to meet LCO OR 21 days for a one time preventive maintenance outage on Startup Transformer XST2 to be completed by February 28, 2002

(continued)

ATTACHMENT 6 TO TXX-

RETYPED TECHNICAL SPECIFICATION BASES PAGES
(For information Only)

Pages: B 3.8-7

BASES

ACTIONS A.3
(continued)

According to Regulatory Guide 1.93 (Ref. 6), operation may continue in Condition A for a period that should not exceed 72 hours. With one offsite circuit inoperable, the reliability of the offsite system is degraded, and the potential for a loss of offsite power is increased, with attendant potential for a challenge to the unit safety systems. In this Condition, however, the remaining OPERABLE offsite circuit and DGs are adequate to supply electrical power to the onsite Class 1E Distribution System.

The 72 hour Completion Time takes into account the capacity and capability of the remaining AC sources, a reasonable time for repairs, and the low probability of a DBA occurring during this period.

The second Completion Time for Required Action A.3 establishes a limit on the maximum time allowed for any combination of required AC power sources to be inoperable during any single contiguous occurrence of failing to meet the LCO. If Condition A is entered while, for instance, a DG is inoperable and that DG is subsequently returned OPERABLE, the LCO may already have been not met for up to 72 hours. This could lead to a total of 144 hours, since initial failure to meet the LCO, to restore the offsite circuit. At this time, a DG could again become inoperable, the circuit restored OPERABLE, and an additional 72 hours (for a total of 9 days) allowed prior to complete restoration of the LCO. The 6 day Completion Time provides a limit on the time allowed in a specified condition after discovery of failure to meet the LCO. This limit is considered reasonable for situations in which Conditions A and B are entered concurrently. The "AND" connector between the 72 hour and 6 day Completion Times means that both Completion Times apply simultaneously, and the more restrictive Completion Time must be met.

As in Required Action A.2, the Completion Time allows for an exception to the normal "time zero" for beginning the allowed outage time "clock." This will result in establishing the "time zero" at the time that the LCO was initially not met, instead of at the time Condition A was entered.

A temporary Completion Time is connected to the Completion Time requirements above (72 hours AND 6 days from discovery of failure to meet LCO) with an "OR" connector. The temporary completion time is 21 days and applies to the performance of preventive maintenance on Startup Transformer XST2. The temporary Completion Time of 21 days expires on February 28, 2002. If, during the conduct of the prescribed XST2 maintenance outage, should any combination of the remaining operable AC Sources be determined inoperable (on an individual unit

BASES

bases), current TS requirements would apply.

(continued)

ATTACHMENT 7 TO TXX-

COMMITMENTS

This communication contains the following [new or revised] commitments which will be completed as noted:

1. In addition, in order to minimize the overall transformer outage time,
   - Service and support equipment will be pre-staged.
   - Replacement parts will be in hand and pre-staged.
   - Experienced personnel will be used.
   - Detailed pre-job briefs will be conducted with affected departments, including Operations, at least one week before the outage start.

2. The following is a listing of contingencies or conditions that will be applicable during the proposed XST2 preventative maintenance window to deterministically enhance the capability of the plant:

   1. The Configuration Risk Mangement Program of TS 5.5.18 will be applied during the extended outage.
   2. Controls will be in place to limit maintenance on other important equipment
   3. All necessary equipment will be prestaged
   4. Necessary personnel will be pre-assigned and verified available
   5. The maintenance will be scheduled to minimize potential adverse impact from the electrical grid or weather
   6. Major switchyard activities will be prevented
   7. Surveillance testing of key equipment will be performed prior to removing XST2 from service .
   8. The focus of operators, maintenance personnel and management is enhanced by scheduling the work when competing activities are not occurring.
   9. The operability of the Turbine Driven Auxiliary Feedwater Pump will be controlled

Mail Envelope Properties (3B5C08E6.527 : 21 : 21114)

Subject: RE: CLIPP status - Missed Surveillance Requirements
Creation Date: 7/23/01 7:22AM
From: David Jaffe

Created By: DHJ@nrc.gov

Recipients	**Action**	**Date & Time**
tva.gov		
bcmorris3 (Morris, Bertram C.)		

Post Office	**Delivered**	**Route**
	Pending	tva.gov

Files	**Size**	**Date & Time**
MESSAGE	4241	07/23/01 07:22AM

Options

Auto Delete:	No
Expiration Date:	None
Notify Recipients:	Yes
Priority:	Standard
Reply Requested:	No
Return Notification:	None
Concealed Subject:	No
Security:	Standard
To Be Delivered:	Immediate
Status Tracking:	Delivered & Opened

From: David Jaffe
To: Morris, Bertram C.
Date: 7/23/01 7:22AM
Subject: RE: CLIPP status - Missed Surveillance Requirements

Within a month or two.

>>> "Morris, Bertram C." <bcmorris3@tva.gov> 07/20/01 01:26PM >>>
Now that the comment period is over, do you have a better estimate on when the "example application" will be available?

-----Original Message-----
From: David Jaffe [mailto:DHJ@nrc.gov]
Sent: Monday, July 09, 2001 1:34 PM
To: bcmorris3@tva.gov
Cc: Robert Dennig; William Reckley
Subject: Re: CLIPP status - Missed Surveillance Requirements

The NRC staff intends to issue a sample application for the "Missed Surveillance TS" and will most likely be available on ADAMS. The schedule is not set at this time but it will most likely be available in the next 60 days.

>>> "Morris, Bertram C." <bcmorris3@tva.gov> 07/05/01 03:32PM >>>
Kahtan:

I am wanting to know if NRC is going to issue an "example application" for the "Missed Surveillance Requirements" item that was recently posted in Fed Register as a CLIIP. See the NRC website address below for the item.

For the previous (and only prior) CLIIP for PASS (also on the web page), an "example application"
was posted that was used by licensees to model their Tech Spec submittals.

Can you help find out on this or provide a reference to talk to?

We are staging up to send a "Missed SRs" TS change in soon after the Fed register period
expires. If NRC is going to produce an "example application", we want to conform to it.

The subject TS is tracked as TS-408 on the BFN Licensing Project Plan.

http://www.nrc.gov/NRR/sts/sts.htm#cliip

thanks

TVA, Browns Ferry Licensing:
bcmorris3 @tva.gov
256-729-7909
fax 256-729-3611
pager 1-800-323-4853; after beep - enter 10781

Mail Envelope Properties (3B5869B9.178 : 5 : 37240)

Subject: RE: CLIPP status - Missed Surveillance Requirements
Creation Date: 7/20/01 1:26PM
From: "Morris, Bertram C." <bcmorris3@tva.gov>

Created By: bcmorris3@tva.gov

Recipients
nrc.gov
owf4_po.OWFN_DO
DHJ (David Jaffe)

Post Office	Route
owf4_po.OWFN_DO	nrc.gov

Files	Size	Date & Time
MESSAGE	1590	07/20/01 01:26PM
Header	1162	

Options

Expiration Date:	None
Priority:	Standard
Reply Requested:	No
Return Notification:	None
Concealed Subject:	No
Security:	Standard

From: "Morris, Bertram C." <bcmorris3@tva.gov>
To: '"David Jaffe"' <DHJ@nrc.gov>
Date: 7/20/01 1:26PM
Subject: RE: CLIPP status - Missed Surveillance Requirements

Now that the comment period is over, do you have a better estimate on when the "example application" will be available?

-----Original Message-----
From: David Jaffe [mailto:DHJ@nrc.gov]
Sent: Monday, July 09, 2001 1:34 PM
To: bcmorris3@tva.gov
Cc: Robert Dennig; William Reckley
Subject: Re: CLIPP status - Missed Surveillance Requirements

The NRC staff intends to issue a sample application for the "Missed Surveillance TS" and will most likely be available on ADAMS. The schedule is not set at this time but it will most likely be available in the next 60 days.

>>> "Morris, Bertram C." <bcmorris3@tva.gov> 07/05/01 03:32PM >>>
Kahtan:

I am wanting to know if NRC is going to issue an "example application" for the "Missed Surveillance Requirements" item that was recently posted in Fed Register as a CLIIP. See the NRC website address below for the item.

For the previous (and only prior) CLIIP for PASS (also on the web page), an "example application"
was posted that was used by licensees to model their Tech Spec submittals.

Can you help find out on this or provide a reference to talk to?

We are staging up to send a "Missed SRs" TS change in soon after the Fed register period
expires. If NRC is going to produce an "example application", we want to conform to it.

The subject TS is tracked as TS-408 on the BFN Licensing Project Plan.

http://www.nrc.gov/NRR/sts/sts.htm#cliip

thanks

TVA, Browns Ferry Licensing:
bcmorris3 @tva.gov
256-729-7909
fax 256-729-3611
pager 1-800-323-4853; after beep - enter 10781

Mail Envelope Properties (3B5D537D.527 : 21 : 21114)

Subject: Re: DRAFT RAI response
Creation Date: 7/24/01 6:52AM
From: David Jaffe

Created By: DHJ@nrc.gov

Recipients	Action	Date & Time
txu.com jboatwright (jboatwright@txu.com)	Transferred	07/24/01 06:52AM

Post Office	Delivered	Route
		txu.com

Files	Size	Date & Time
Mail MESSAGE	1587	07/24/01 06:52AM

Options

Auto Delete:	No
Expiration Date:	None
Notify Recipients:	Yes
Priority:	Standard
Reply Requested:	No
Return Notification:	None
Concealed Subject:	No
Security:	Standard
To Be Delivered:	Immediate
Status Tracking:	Delivered & Opened

From: David Jaffe
To: jboatwright@txu.com
Date: 7/24/01 6:52AM
Subject: Re: DRAFT RAI response

Jim-

Please see the attached question(s) from Mr. Ahmed concerning the power measurement. I'd like to schedule a call, today, to get your ideas, followed by a final draft by Wednesday.

>>> <jboatwright@txu.com> 07/19/01 12:33PM >>>

Please find attached, in Word Perfect format, draft responses to the concerns identified by Ichbal (sp?). The responses are presented as red line changes to the responses provided in our June 22 letter.

Please let me know of the adequacy of these responses at your earliest convenience.

Thanks, James (214-812-8232)

(See attached file: cpses uprate boatwright.wpd)

From: Iqbal Ahmed
To: David Jaffe
Date: 7/23/01 4:45PM
Subject: Re: Updated TXU Response

David ! The licensee's response to question 2 is acceptable. My first question requested explaination of procedure for calculating the sensitivities listed in table 1 and asked the licensee to show (e.g. steam generator blowdown, feedwater enthalpy) how instrument error (% instrment uncertainty) is converted into "power uncertainty". The licensee did not provide the requested example. Additionally, I am not sure of the Steam Generator Blowdown instrument uncertainty component listed inthe table. Westinghouse topical reports show morethan one components of this variable.

>>> David Jaffe 07/19/01 12:41PM >>>
Please open the attached file with Word Perfect so that you can see the "Red Lined" sections which are intended to respond to your two questions which we asked the licensee, today. Please call me after your review.

Received: from igate.nrc.gov
by nrcgwia.nrc.gov; Wed, 25 Jul 2001 09:35:05 -0400
Received: from nrc.gov
by smtp-gateway ESMTPœ id JAA11528
for <rem2@nrc.gov>; Wed, 25 Jul 2001 09:33:27 -0400 (EDT)
Received: from cc--exs03.prod.entergy.com (TCBuMail [148.194.6.99])
by tcbumail.ar.entergy.com () with ESMTP id IAA22003
for <rem2@nrc.gov>; Wed, 25 Jul 2001 08:35:34 -0500 (CDT)
Received: by cc--exs03.prod.entergy.com with Internet Mail Service (5.5.2653.19)
id <PMTG1QDM>; Wed, 25 Jul 2001 08:35:16 -0500
Message-ID: <97E75CC4C2ABD211827400105A248665021974CB@RBS-EXS01>
From: "LORFING, DAVID N" <DLORFIN@entergy.com>
To: "NORRIS, GREGORY P" <GNORRIS@entergy.com>,
"BYRD, RONALD W"
<RBYRD@entergy.com>,
"LEAVINES, JOSEPH W" <JLEAVIN@entergy.com>,
'"Bob Moody"' <rem2@nrc.gov>
Subject: Status on Generic letter 96-06 Waterhammer Analysis
Date: Wed, 25 Jul 2001 08:35:14 -0500
MIME-Version: 1.0
X-Mailer: Internet Mail Service (5.5.2653.19)
Content-Type: text/plain;
charset="iso-8859-1"

From: "LORFING, DAVID N" <DLORFIN@entergy.com>
To: "NORRIS, GREGORY P" <GNORRIS@entergy.com>, "BYRD, RONALD W" <RBYRD@entergy.com>, "LEAVINES, JOSEPH W" <JLEAVIN@entergy.com>, '"Bob Moody"' <rem2@nrc.gov>
Date: 7/25/01 9:35AM
Subject: Status on Generic letter 96-06 Waterhammer Analysis

Several of you have asked about the status on the waterhammer analysis being performed to close GL 96-06.

I just received a status from Engineering (Ghodrat Javeharian). He is performing an analysis of the drywell unit coolers and their associated service water piping and isolation valves to determine if a waterhammer event in the system would result in a failure of the pressure boundary of any of the system components. He has analyzed the isolation valves, piping and is currently working on the unit coolers and pipe stand / nozzles (this is the piping arrangement at the unit cooler).

The isolation valves and the service water piping has been determined to be acceptable (calculated pressures for the waterhammer event are less than the tested values for the isolation valves and less than the faulted allowable stresses for the piping.) The analysis of the pipe stand and unit cooler tubing has not been completed. According to Ghodrat, this is a more complicated analysis. He continues to work on this, but does not have an estimated completion date.

Ghodrat's goal is to analyze the components in the system that could be impacted by a water hammer event, and show that they would survive the event(pressure boundary remains in tact), isolating drywell atmosphere from external service water system components and the environment. The survival of the isolation valves and associated piping are adequate to demonstrate that the isolated system would prevent communication from the drywell to the environment, even if a unit cooler tube or part of the pipe stand fails. We continue to perform analysis of the unit cooler and pipe stand to show that all impacted components survive.

David Lorfing

Mail Envelope Properties (3B5F415C.195 : 19 : 12693)

Subject: Outline for Conference Call
Creation Date: 7/25/01 6:01PM
From: "Jack Hicks" <jhicks1@txu.com>

Created By: jhicks1@txu.com

Recipients
nrc.gov
owf4_po.OWFN_DO
DHJ (David Jaffe)

txu.com
bhenley1 CC (Bruce Henley)

Post Office	Route
owf4_po.OWFN_DO	nrc.gov
	txu.com

Files	Size	Date & Time
MESSAGE	1160	07/25/01 06:01PM
Header	718	

Options

Expiration Date:	None
Priority:	Standard
Reply Requested:	No
Return Notification:	None
Concealed Subject:	No
Security:	Standard

From: "Jack Hicks" <jhicks1@txu.com>
To: "David Jaffe" <DHJ@nrc.gov>
Date: 7/25/01 6:00PM
Subject: Outline for Conference Call

Dave , we will be ready to talk at 1030 EST. Let me know where you want us to call you from. I will two of the engineers responsible for the SFP Rerack Mod with me.

Question 1

Source: Page 7-6 of TXX-00144 (10-04-2000) and TXX-01074(04-30-2001) and page 8-26 of TXX-01074.

See last 2 paragraphs of Section 7.5.2 or 8.2.6.2 of the Licensing Report for discussion of acceptable stress-strain relationships (i.e., Appendix C of NUREG/CR-6608)

Question 2

Source: Page 5-26 of TXX-00144 (10-04-2000) and TXX-01074(04-30-2001), Table 5.7.1 refers to max local water and fuel cladding temperatures.

See response to SPLB-1 of TXX-01102(06-18-2001) page 6 of Attachment 3 states that max bulk pool temperature is 195 degrees F.

Figures 8.2.22 thru 33 in the Licensing Report {Enclosure 1of TXX-00144 (10-04-2000)} give operating temperature profiles and accident temperature profiles
for the SFP floor and walls.

As stated on page 8-24 of the Licensing Report of of TXX-01102(06-18-2001), reduction in concrete strength due to high temperatures and thermal cycling have been included in the results based on the stated conservative assumptions.

CC: "Bruce Henley" <bhenley1@txu.com>

From: "James Morris" <jrmorris@stpegs.com>
To: <djw1@nrc.gov>
Date: 7/30/01 4:16PM
Subject: Updated pages for Submittal letter NOC-AE-00000914

Ref: Letter NOC-AE-00000914, STP License Amendment Request - Deletion of License Condition 2.G and Technical Specification 6.6.1.a., dated December 20, 2000.

Per our telephone conversation earlier today, attached are the updated markup page and reconstituted page for Unit 2 License page 6.

Jim Morris
STP Licensing
phone: 361-972-8652
fax: 361-972-8298
e-mail: jrmorris@stpegs.com

CC: <MCT@nrc.gov>, "Scott Head" <smhead.GWPO_NASSUR.GWDOM_STP@stpegs.com>

Received: from igate.nrc.gov
by nrcgwia.nrc.gov; Mon, 30 Jul 2001 16:15:16 -0400
Received: from nrc.gov
by smtp-gateway SMTPœ id QAA09191;
Mon, 30 Jul 2001 16:13:10 -0400 (EDT)
Received: from GWDOM_STP-Message_Server by stpegs.com
with Novell_GroupWise; Mon, 30 Jul 2001 15:13:59 -0500
Message-Id: <sb6579b7.070@stpegs.com>
X-Mailer: Novell GroupWise 5.5.2
Date: Mon, 30 Jul 2001 15:13:56 -0500
From: "James Morris" <jrmorris@stpegs.com>
To: <djw1@nrc.gov>
Cc: <MCT@nrc.gov>, "Scott Head" <smhead.GWPO_NASSUR.GWDOM_STP@stpegs.com>
Subject: Updated pages for Submittal letter NOC-AE-00000914
Mime-Version: 1.0
Content-Type: multipart/mixed; boundary="=_E1BBB217.0D6C045B"

Received: from igate.nrc.gov
by nrcgwia.nrc.gov; Mon, 30 Jul 2001 16:15:16 -0400
Received: from nrc.gov
by smtp-gateway SMTPœ id QAA09191;
Mon, 30 Jul 2001 16:13:10 -0400 (EDT)
Received: from GWDOM_STP-Message_Server by stpegs.com
with Novell_GroupWise; Mon, 30 Jul 2001 15:13:59 -0500
Message-Id: <sb6579b7.070@stpegs.com>
X-Mailer: Novell GroupWise 5.5.2
Date: Mon, 30 Jul 2001 15:13:56 -0500
From: "James Morris" <jrmorris@stpegs.com>
To: <djw1@nrc.gov>
Cc: <MCT@nrc.gov>, "Scott Head" <smhead.GWPO_NASSUR.GWDOM_STP@stpegs.com>
Subject: Updated pages for Submittal letter NOC-AE-00000914
Mime-Version: 1.0
Content-Type: multipart/mixed; boundary="=_E1BBB217.0D6C045B"

contingency plans previously approved by the Commission and all amendments and revisions to such plans made pursuant to the authority under 10 CFR 50.90 and 10 CFR 50.54(p). The plans, which contain Safeguards Information protected under 10 CFR 73.21, are entitled: "South Texas Project Electric Generating Station Physical Security Plan," with revisions/amendments submitted through September 30, 1988; "South Texas Project Electric Generating Station Security Personnel Qualification and Training Plan" with revisions submitted through March 4, 1988, and "South Texas Project Electric Generating Station Safeguards Contingency Plan," with revisions/amendments submitted through July 19, 1988.

G. ~~Reporting To The Commission~~ Not Used

~~Except as otherwise provided in the Technical Specifications or Environmental Protection Plan, STPNOC shall report any violations of the requirements contained in Section 2.C of this license in the following manner: initial notification shall be made within twenty-four (24) hours to the NRC Operations Center via the Emergency Notification System with written follow-up within 30 days in accordance with the procedures described in 10 CFR 50.73(b), (c), and (e).~~

H. Financial Protection

The Owners shall have and maintain financial protection of such type and in such amounts as the Commission shall require in accordance with Section 170 of the Atomic Energy Act of 1954, as amended, to cover public liability claims.

I. Effective date and Expiration

This license is effective as of the date of issuance and shall expire at midnight on December 15, 2028.

FOR THE NUCLEAR REGULATORY COMMISSION

Original Signed By: James H. Sniezek/for

Thomas E. Murley, Director
Office of Nuclear Reactor Regulation

Enclosures:
1. Appendix A, Technical Specifications (NUREG-1346)
2. Appendix B, Environmental Protection Plan
3. Appendix C, Antitrust Conditions

Date of Issuance: March 28, 1989

Amendment No. 80

Request for Additional Information
Elimination of Moderator Temperature Coefficient (MTC)
Determination at Two-Thirds of Core Burnup
Arkansas Nuclear One, Unit 2 (ANO-2)

1. Page 3 of 5 of the Attachment, Answer on Condition 1: The justification for elimination of the end-of-cycle (EOC) MTC measurement was based on analysis using the Combustion Engineering (CE) methodology. The first condition for use of this method of eliminating EOC MTC measurement requires that the CE methodology must be used. Please state that the cycle will be designed using the CE methodology, such that the best estimate MTC is more negative than the beginning-of-cycle (BOC) technical specification (TS) limit by the design margin and that the best estimate MTC is more positive than the EOC TS limit by the design margin.

2. Page 3 of 5 of the Attachment, Answer on Condition 2: Condition 2 of the NRC's Safety Evaluation for the approval of Combustion Engineering Owners Group Topical Report CE NPSD-911-A and Amendment 1-A stated that the design margin is 1.6 pcm/°F at all times in life. Please state that the design margin will be 1.6 pcm/°F at all times in life.

3. Page 3 of 5 of the Attachment, Answer on Condition 4: The response to Question 4 in Amendment 1 of CENPDSD-911 was **NOT** accepted by NRC. Condition 4 requires that the current CE methodology as described in the report be used. Use of any other methodology is not approved. Please state that the current CE methodology as described in the report will be used.

4. Control element assembly (CEA) tip loss was discovered by the unexpected results of the EOC MTC measurement in another CE plant. What precautions and actions is ANO-2 taking to prevent and detect CEA tip loss?