NOV 26 1974

Docket Nos. 50-269
50-270
and 50-287

Duke Power Company
ATTN: Mr. Austin C. Thies
Senior Vice President
422 South Church Street
Post Office Box 2178
Charlotte, North Carolina 28201

Gentlemen:

The Commission has issued the enclosed Amendment No. 6, Technical Specification Change No. 16 for License No. DPR-38; Amendment No. 6, Technical Specification Change No. 11 for License No. DPR-47; and Amendment No. 3, Technical Specification Change No. 3 for License No. DPR-55, for the Oconee Nuclear Station, Units 1, 2, and 3. These amendments are in response to your request dated September 20, 1974, and subsequent letters dated October 8, 1974, and October 31, 1974.

These amendments include the Technical Specification changes required for the second fuel cycle operation of Oconee Unit 1. The proposed Control Rod Withdrawal Limit For 4 Pump Operations (Figure 3.5.2-1A2) after 250 ± 5 full power days of operation has not been included in this change since it does not conform to the Interim Acceptance Criteria for ECCS and your proposed Final Acceptance Criteria (Appendix K) Technical Specifications have not yet been approved.

Copies of the related Safety Evaluation and the Federal Register Notice are also enclosed.

Sincerely,

Original signed by
R. A. Purple

Robert A. Purple, Chief
Operating Reactors Branch #1
Directorate of Licensing

Enclosures:
See next page

Concl ltr.

OFFICE ➤						
SURNAME ➤						
DATE ➤						

Enclosures:
1. Amendment No. 6 to DPR-38
2. Amendment No. 6 to DPR-47
3. Amendment No. 3 to DPR-55
4. Safety Evaluation
5. Federal Register Notice

cc w/enclosures:
Mr. William L. Porter
Duke Power Company
P. O. Box 2178
422 South Church Street
Charlotte, North Carolina 28201

Mr. Troy B. Conner
Conner, Hadlock & Knotts
1747 Pennsylvania Avenue, NW.
Washington, D.C. 20006

Honorable Reese A. Hubbard
County Supervisor of Oconee County
Walhalla, South Carolina 29621

Oconee County Library
201 South Spring Street
Walhalla, South Carolina 29691

cc w/enclosures & incoming:
Mr. Elmer Whitten
State Clearinghouse
Office of the Governor
Division of Administration
1205 Pendleton Street
4th Floor
Columbia, South Carolina 29201

Mr. Dave Hopkins
Environmental Protection Agency
1421 Peachtree Street, NE.
Atlanta, Georgia 30309

bcc: H. J. McAlduff, OROO
J. R. Buchanan, ORNL
T. B. Abernathy, DTIE

DISTRIBUTION
Docket File
AEC PDR
Local PDR
OR-1 Reading
Attorney, OGC
RO (3)
NDube
BJones (12)
RVollmer
JSaltzman (w/o TS)
SMSheppard
LMcDonough
SKari (w/o TS)
WOMiller
BScharf (15)
TJCarter
RJSchemel
PCollins
SVarga
CHebron (amdt only)
ACRS (16)

OFFICE➤	L:OR-1	L:OR-1	OGC	L:OR		
SURNAME➤	LMcDonough:dc	RAPurple		KRGoller		
DATE➤	11/18/74	11/ /74	11/ /74	11/ /74		

DUKE POWER COMPANY

DOCKET NO. 50-269

OCONEE NUCLEAR STATION, UNIT 1

AMENDMENT TO FACILITY OPERATING LICENSE

Amendment No. 6
License No. DPR-38

1. The Atomic Energy Commission (the Commission) having found that:

   A. The application for amendment by Duke Power Company (the licensee) dated September 20, 1974, as supplemented October 8 and 31, 1974, complies with the standards and requirements of the Atomic Energy Act of 1954, as amended, and the Commission's rules and regulations set forth in 10 CFR Chapter I;

   B. The facility will operate in conformity with the application, the provisions of the Act, and the rules and regulations of the Commission;

   C. There is reasonable assurance (i) that the activities authorized by this amendment can be conducted without endangering the health and safety of the public, and (ii) that such activities will be conducted in compliance with the Commission's regulations;

   D. The issuance of this amendment will not be inimical to the common defense and security or to the health and safety of the public; and

   E. Prior public notice of this amendment is not required since the amendment does not involve a significant hazards consideration.

2. Accordingly, the license is amended by a change to the Technical Specifications as indicated in the attachment to this license amendment and Paragraph 3.B of Facility License No. DPR-38 is hereby amended to read as follows:

OFFICE ➤						
SURNAME ➤						
DATE ➤						

"B. Technical Specifications

The Technical Specifications contained in Appendices A and B, as revised, are hereby incorporated in the license. The licensee shall operate the facility in accordance with the Technical Specifications, as revised by issued changes thereto through Change No. 16."

3. This license amendment is effective as of the date of its issuance.

FOR THE ATOMIC ENERGY COMMISSION

Original Signed by
Karl Goller

Karl R. Goller, Assistant Director
for Operating Reactors
Directorate of Licensing

Attachment:
Change No. 16 to Technical
Specifications

Date of Issuance: NOV 26 1974

OFFICE ➤						
SURNAME ➤						
DATE ➤						

ATTACHMENT TO LICENSE AMENDMENTS

AMENDMENT NO. 6 TO FACILITY LICENSE NO. DPR-38,
CHANGE NO. 16 TO TECHNICAL SPECIFICATIONS;

AMENDMENT NO. 6 TO FACILITY LICENSE NO. DPR-47,
CHANGE NO. 11 TO TECHNICAL SPECIFICATIONS;

AMENDMENT NO. 3 TO FACILITY LICENSE NO. DPR-55,
CHANGE NO. 3 TO TECHNICAL SPECIFICATIONS;

DUKE POWER COMPANY

OCONEE NUCLEAR STATION, UNITS 1, 2, AND 3

DOCKET NOS. 50-269, 50-270, AND 50-287

Revise Appendix A as follows:

Remove Pages	Insert New Pages
2.1-1 & 2.1-2	2.1-1 & 2.1-2
2.1-3	2.1-3, 2.1-3a, 2.1-3b & 2.1-4
2.1-4	2.1-4a
2.1-7	2.1-7
2.1-10	2.1-10
2.3-1 & 2.3-2	2.3-1 & 2.3-2
2.3-3 & 2.3-4	2.3-3 & 2.3-4
2.3-5	2.3-5
2.3-8	2.3-8 & 2.3-8a
2.3-11	2.3-11
3.5-12	3.5-12
3.5-13	3.5-13 Blank page
3.5-18	3.5-18
3.5-21	3.5-21

OFFICE ➤						
SURNAME ➤						
DATE ➤						

Remove Pages	Insert New Pages
3.5-24	3.5-24
3.11-1	3.11-1
3.5-6 & 3.5-7	3.5-6 & 3.5-7
3.5-8 & 3.5-9	3.5-8 & 3.5-9
3.5-10 & 3.5-11	3.5-10 & 3.5-11

OFFICE ➤						
SURNAME ➤						
DATE ➤						

2 SAFETY LIMITS AND LIMITING SAFETY SYSTEM SETTINGS

2.1 SAFETY LIMITS, REACTOR CORE

Applicability

Applies to reactor thermal power, reactor power imbalance, reactor coolant system pressure, coolant temperature, and coolant flow during power operation of the plant.

Objective

To maintain the integrity of the fuel cladding.

Specification

The combination of the reactor system pressure and coolant temperature shall not exceed the safety limit as defined by the locus of points established in Figure 2.1-1A-Unit 1. If the actual pressure/temperature point is below
2.1-1B-Unit 2
2.1-1C-Unit 3
and to the right of the line, the safety limit is exceeded.

The combination of reactor thermal power and reactor power imbalance (power in the top half of the core minus the power in the bottom half of the core expressed as a percentage of the rated power) shall not exceed the safety limit as defined by the locus of points (solid line) for the specified flow set forth in Figure 2.1-2A-Unit 1. If the actual reactor-thermal-power/power
2.1-2B-Unit 2
2.1-2C-Unit 3
imbalance point is above the line for the specified flow, the safety limit is exceeded.

Bases - Unit 1

The safety limits presented for Oconee Unit 1 have been generated using BAW-2 critical heat flux (CHF) correlation[1] and the actual measured flow rate at Oconee Unit 1 (2). This development is discussed in the Oconee 1, Cycle 2-Reload Report, reference (2). The flow rate utilized is 107.6 percent of the design flow (131.32 x 10^6 lbs/hr) based on four-pump operation.(2)

To maintain the integrity of the fuel cladding and to prevent fission product release, it is necessary to prevent overheating of the cladding under normal operating conditions. This is accomplished by operating within the nucleate boiling regime of heat transfer, wherein the heat transfer coefficient is large enough so that the clad surface temperature is only slightly greater than the coolant temperature. The upper boundary of the nucleate boiling regime is termed "departure from nucleate boiling" (DNB). At this point, there is a sharp reduction of the heat transfer coefficient, which would result in high cladding temperatures and the possibility of cladding failure. Although DNB is not an observable parameter during reactor operation, the observable parameters of neutron power, reactor coolant flow, temperature, and pressure

16/11/3

NOV 26 1974

can be related to DNB through the use of the BAW-2 correlation (1). The BAW-2 correlation has been developed to predict DNB and the location of DNB for axially uniform and non-uniform heat flux distributions. The local DNB ratio (DNBR), defined as the ratio of the heat flux that would cause DNB at a particular core location to the actual heat flux, is indicative of the margin to DNB. The minimum value of the DNBR, during steady-state operation, normal operational transients, and anticipated transients is limited to 1.32. A DNBR of 1.32 corresponds to a 95 percent probability at a 99 percent confidence level that DNB will not occur; this is considered a conservative margin to DNB for all operating conditions. The difference between the actual core outlet pressure and the indicated reactor coolant system pressure has been considered in determining the core protection safety limits. The difference in these two pressures is nominally 45 psi; however, only a 30 psi drop was assumed in reducing the pressure trip setponts to correspond to the elevated location where the pressure is actually measured.

The curve presented in Figure 2.1-1A represents the conditions at which a minimum DNBR of 1.32 is predicted for the maximum possible thermal power (112 percent) when four reactor coolant pumps are operating (minimum reactor coolant flow is 107.6 percent of 131.3 x 10^6 lbs/hr.). This curve is based on the combination of nuclear power peaking factors, with potential fuel densification effects, which result in a more conservative DNBR than any other shape that exists during normal operation.

The curves of Figure 2.1-2A are based on the more restrictive of two thermal limits and include the effects of potential fuel densification:

1. The 1.32 DNBR limit produced by the combination of the radial peak, axial peak and position of the axial peak that yields no less than a 1.32 DNBR.

2. The combination of radial and axial peak that causes central fuel melting at the hot spot. The limit is 20.15 kw/ft for Unit 1.

Power peaking is not a directly observable quantity and therefore limits have been established on the bases of the reactor power imbalance produced by the power peaking.

The specified flow rates for Curves 1, 2, 3 and 4 of Figure 2.1-2A correspond to the expected minimum flow rates with four pumps, three pumps, one pump in each loop and two pumps in one loop, respectively.

The curve of Figure 2.1-1A is the most restrictive of all possible reactor coolant pump-maximum thermal power combinations shown in Figure 2.1-3A (because the four-pump pressure - temperature restriction is known to be more limiting than the 3 and 2 pump combinations, only the four pump limit has been shown on Figure 2.1-3A).

The maximum thermal power for three-pump operation is 87 percent due to a power level trip produced by the flux-flow ratio 75 percent flow x 1.08 = 81 percent power, plus the maximum calibration and instrument error. The maximum thermal power for other coolant pump conditions are produced in a similar manner.

16/11/3

NOV 26 1974

For Figure 2.1-3A, a pressure-temperature point above and to the left of the curve would result in a DNBR greater than 1.32. The 1.32 DNBR curve for four-pump operation is more restrictive than any other reactor coolant pump situation because any pressure/temperature point above and to the left of the four pump curve will be above and to the left of the other curves.

16/11/3

References

(1) Correlation of Critical Heat Flux in a Bundle Cooled by Pressurized Water, BAW-10000, March, 1970.

(2) Oconee 1, Cycle 2 - Reload Report - BAW-1409, Sepetmeber, 1974.

NOV 26 1974

Bases - Units 2 and 3

To maintain the integrity of the fuel cladding and to prevent fission product release, it is necessary to prevent overheating of the cladding under normal operating conditions. This is accomplished by operating within the nucleate boiling regime of heat transfer, wherein the heat transfer coefficient is large enough so that the clad surface temperature is only slightly greater than the coolant temperature. The upper boundary of the nucleate boiling regime is termed "departure from nucleate boiling" (DNB). At this point, there is a sharp reduction of the heat transfer coefficient, which would result in high cladding temperatures and the possibility of cladding failure. Although DNB is not an observable parameter during reactor operation, the observable parameters of neutron power, reactor coolant flow, temperature, and pressure can be related to DNB through the use of the W-3 correlation.(1) The W-3 correlation has been developed to predict DNB and the location of DNB for axially uniform and non-uniform heat flux distributions. The local DNB ratio (DNBR), defined as the ratio of the heat flux that would cause DNB at a particular core location to the actual heat flux, is indicative of the margin to DNB. The minimum value of the DNBR, during steady-state operation, normal operational transients, and anticipated transients is limited to 1.3. A DNBR of 1.3 corresponds to a 94.3 percent probability at a 99 percent confidence level that DNB will not occur; this is considered a conservative margin to DNB for all operating conditions. The difference between the actual core outlet pressure and the indicated reactor coolant system pressure has been considered in determining the core protection safety limits. The difference in these two pressures is nominally 45 psi; however, only a 30 psi drop was assumed in reducing the pressure trip setpoints to correspond to the elevated location where the pressure is actually measured.

The curve presented in Figure 2.1-1B represents the conditions at which a 16/3
2.1-1C
minimum DNBR of 1.3 is predicted for the maximum possible thermal power (112%) when four reactor coolant pumps are operating (minimum reactor coolant flow is 131.3 x 10^6 lbs/hr). This curve is based on the following nuclear power peaking factors(2) with potential fuel densification effects:

$$F_q^N = 2.67;\ F_{\Delta H}^N = 1.78;\ F_z^N = 1.50$$

The design peaking combination results in a more conservative DNBR than any other shape that exists during normal operation.

The curves of Figure 2.1-2B are based on the more restrictive of two thermal 16/11 3
2.1-2C
limits and include the effects of potential fuel densification:

1. The 1.3 DNBR limit produced by a nuclear power peaking factor of $F_q^N = 2.67$ or the combination of the radial peak, axial peak and position of the axial peak that yields no less than 1.3 DNBR.

2. The combination of radial and axial peak that causes central fuel melting at the hot spot. The limit is 19.8 kw/ft - Unit 2 16/11
   19.8 kw/ft - Unit 3 3

NOV 26 1974

Power peaking is not a directly observable quantity and therefore limits have been established on the bases of the reactor power imbalance produced by the power peaking.

The specified flow rates for Curves 1, 2, 3, and 4 of Figure 2.1-2B correspond 16/11
2.1-2C 3
to the expected minimum flow rates with four pumps, three pumps, one pump in each loop and two pumps in one loop, respectively.

The curve of Figure 2.1-1B is the most restrictive of all possible reactor 16/11/
2.1-1C 3
coolant pump-maximum thermal power combinations shown in Figure 2.1-3B.
2.1-3C

The curves of Figure 2.1-3B represent the conditions at which a minimum DNBR 16/11/
2.1-3C 3
of 1.3 is predicted at the maximum possible thermal power for the number of reactor coolant pumps in operation or the local quality at the point of minimum DNBR is equal to 15%,(3) whichever condition is more restrictive.

Using a local quality limit of 15 percent at the point of minimum DNBR as a 16/11
basis for Curves 2 and 4 of Figure 2.1-3B is a conservative criterion even 3
2.1-3C
though the quality of the exit is higher than the quality at the point of minimum DNBR.

The DNBR as calculated by the W-3 correlation continually increases from point of minimum DNBR, so that the exit DNBR is 1.7 or higher, depending on the pressure. Extrapolation of the W-3 correlation beyond its published quality range of +15 percent is justified on the basis of experimental data.(4)

The maximum thermal power for three pump operation is 86% - Unit 2 16/11
86% - Unit 3 3
due to a power level trip produced by the flux-flow ratio 75% flow x 1.07 = 80%
1.07 = 80%
power
plus the maximum calibration and instrument error. The maximum thermal power for other coolant pump conditions are produced in a similar manner.

For each curve of Figure 2.1-3B, a pressure-temperature point above and to the 16/11
2.1-3C 3
left of the curve would result in a DNBR greater than 1.3 or a local quality at the point of minimum DNBR less than 15 percent for that particular reactor coolant pump situation. The 1.3 DNBR curve for four-pump operation is more restrictive than any other reactor coolant pump situation because any pressure/temperature point above and to the left of the four-pump curve will be above and to the left of the other curves.

REFERENCES

(1) FSAR, Section 3.2.3.1.1
(2) FSAR, Section 3.2.3.1.1.c
(3) FSAR, Section 3.2.3.1.1.k

NOV 26 1974

(4) The following papers which were presented at the Winter Annual Meeting, ASME, November 18, 1969, during the "Two-phase Flow and Heat Transfer in Rod Bundles Symposium:"

(a) Wilson, et al.
"Critical Heat Flux in Non-Uniform Heater Rod Bundles"

(b) Gellerstedt, et al.
"Correlation of a Critical Heat Flux in a Bundle Cooled by Pressurized Water"

NOV 26 1974

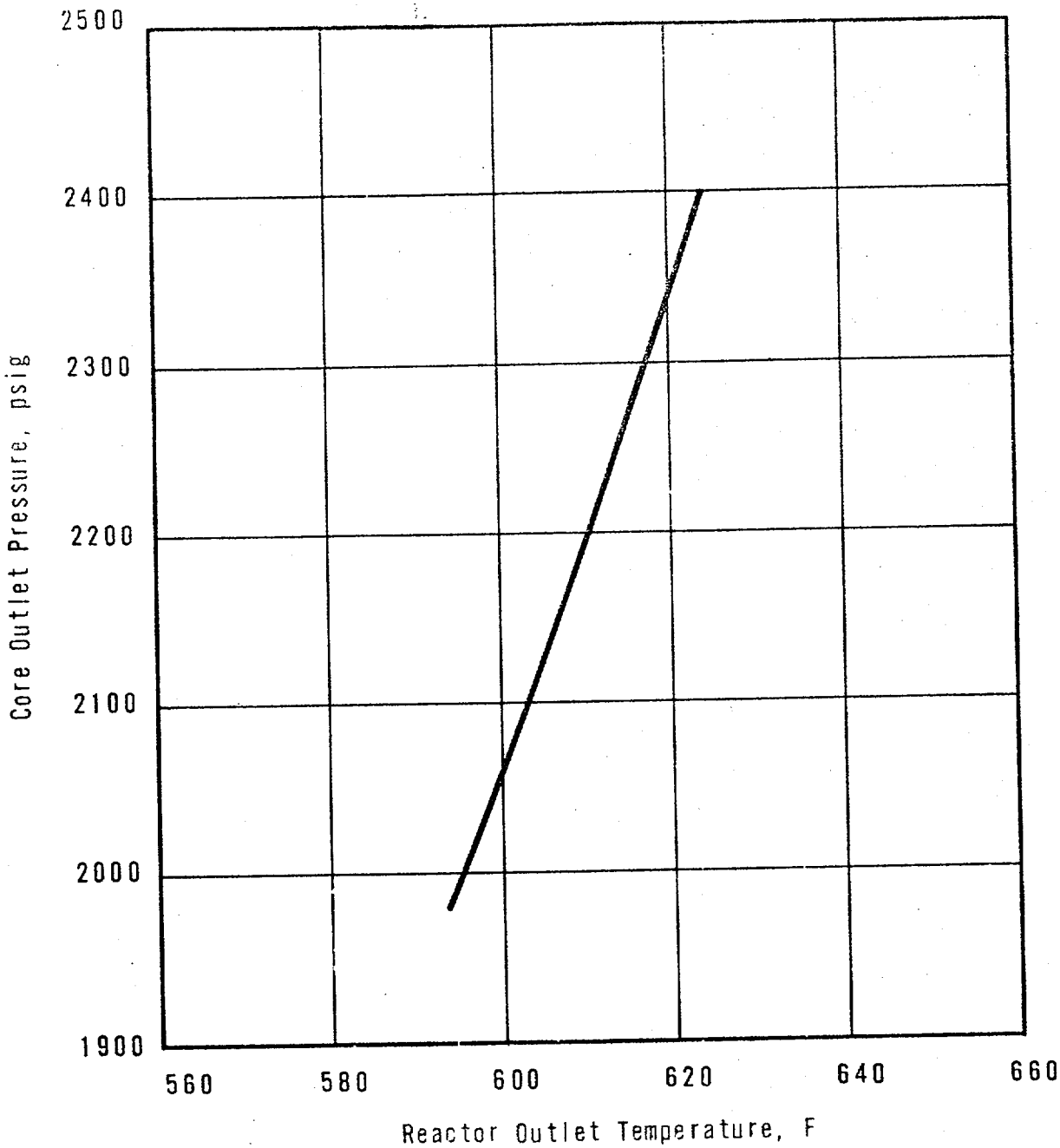

CORE PROTECTION SAFETY LIMITS

UNIT 1

OCONEE NUCLEAR STATION

Figure 2.1-1A | 16/11/3

NOV 26 1974

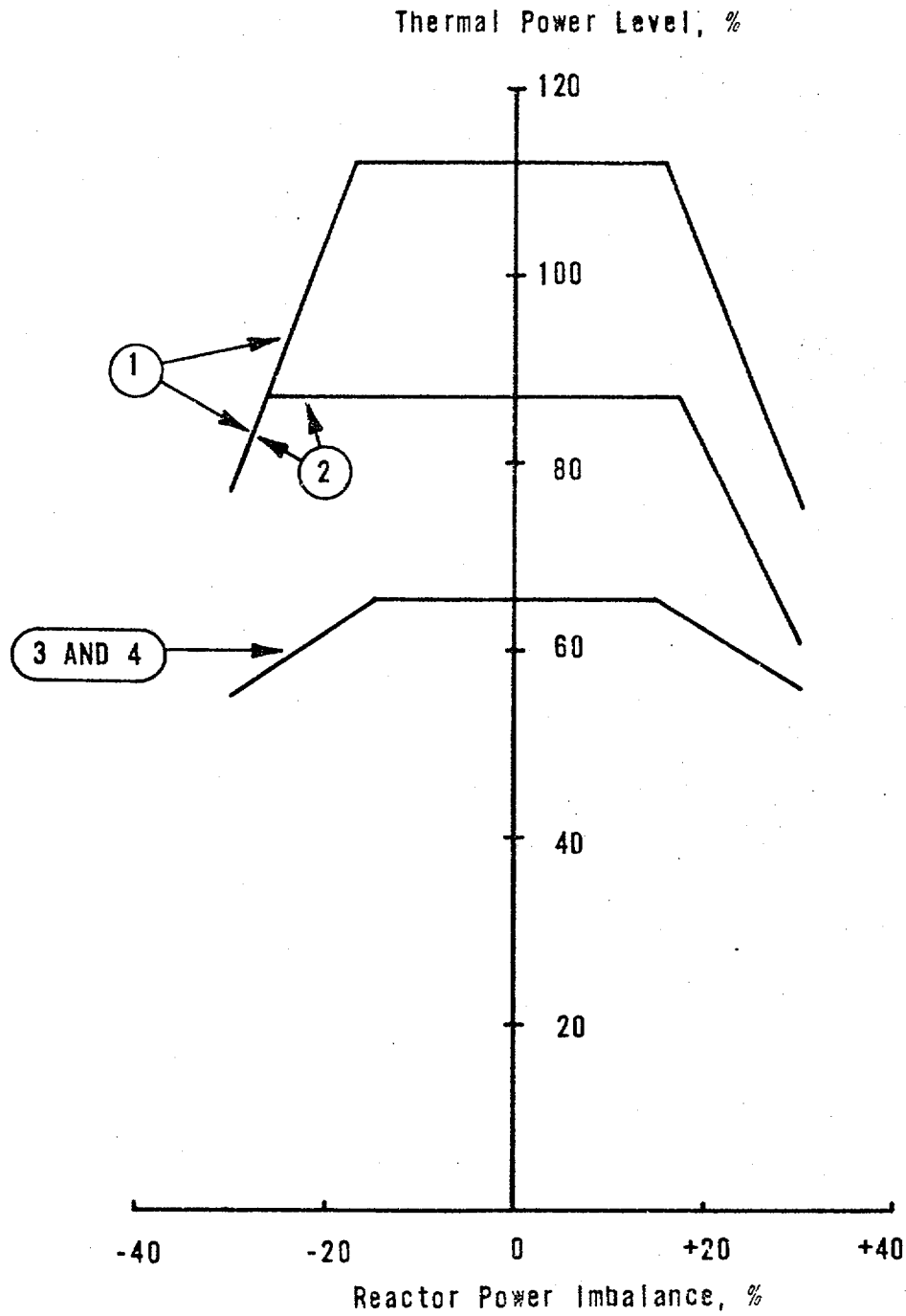

CURVE	REACTOR COOLANT FLOW (LB/HR)
1	131.3×10^6
2	98.1×10^6
3	64.4×10^6
4	60.1×10^6

CORE PROTECTION SAFETY LIMITS

UNIT 1

OCONEE NUCLEAR STATION

Figure 2.1-2A

NOV 26 1974

16/11/3

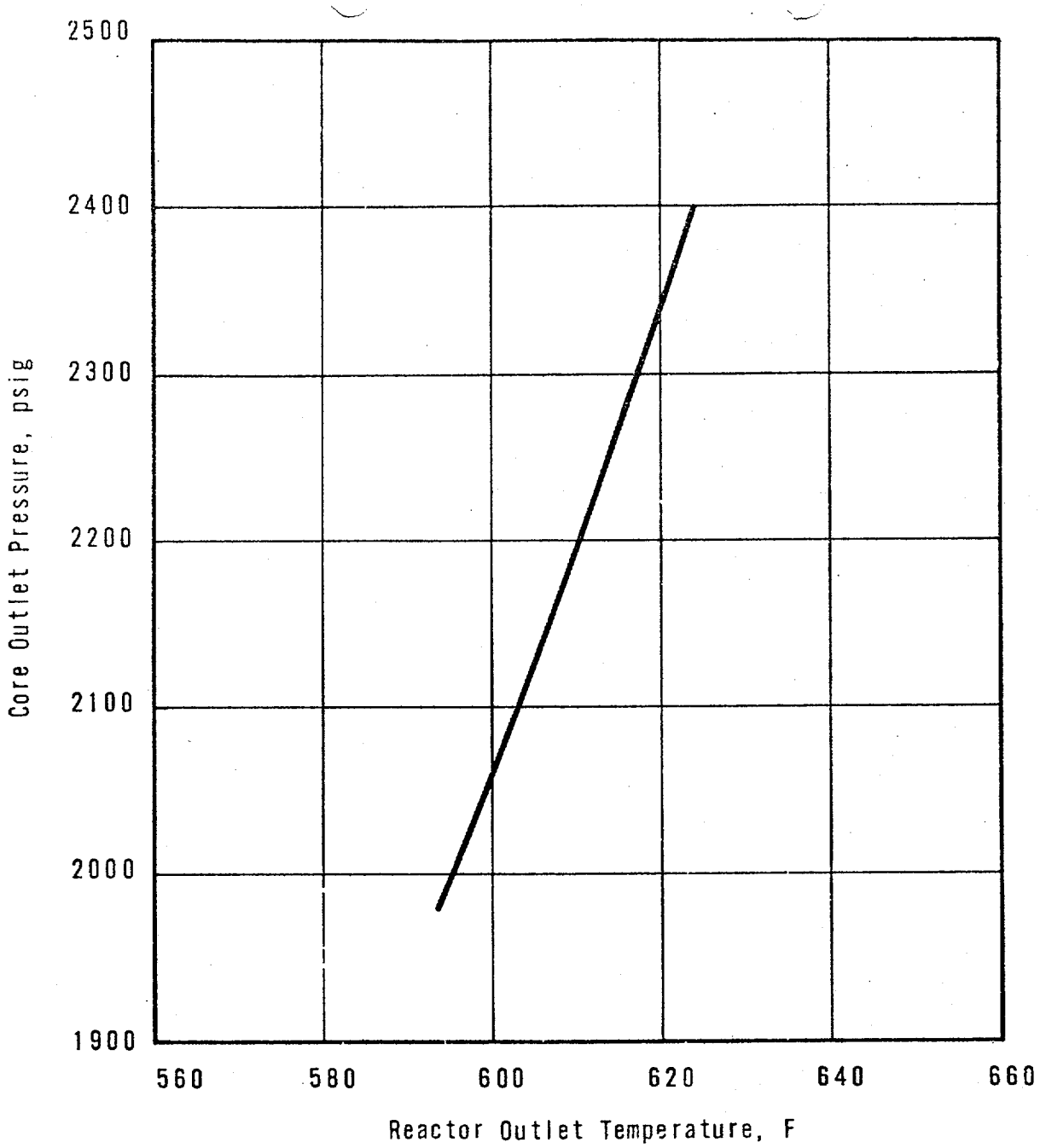

CORE PROTECTION SAFETY LIMITS

UNIT 1

OCONEE NUCLEAR STATION

Figure 2.1-3A | 16/11/3

NOV 26 1974

2.3 LIMITING SAFETY SYSTEM SETTINGS, PROTECTIVE INSTRUMENTATION

Applicability

Applies to instruments monitoring reactor power, reactor power imbalance, reactor coolant system pressure, reactor coolant outlet temperature, flow, number of pumps in operation, and high reactor building pressure.

Objective

To provide automatic protective action to prevent any combination of process variables from exceeding a safety limit.

Specification

The reactor protective system trip setting limits and the permissible bypasses for the instrument channels shall be as stated in Table 2.3-1A - Unit 1 and
2.3-1B - Unit 2
2.3-1C - Unit 3 | 16/11/3

Figure 2.3-2A1 } Unit 1
2.3-2A2
2.3-2B - Unit 2
2.3-2C - Unit 3

The pump monitors shall produce a reactor trip for the following conditions:

a. Loss of two pumps and reactor power level is greater than 55% (0.0% for Unit 1) of rated power. | 16/11/3

b. Loss of two pumps in one reactor coolant loop and reactor power level is greater than 0.0% of rated power. (Power/RC pump trip setpoint is reset to 55% of rated power for single loop operation. Power/RC pump trip setpoint is reset to 55% for all modes of 2 pump operation for Unit 1.) | 16/11/

c. Loss of one or two pumps during two-pump operation.

Bases

The reactor protective system consists of four instrument channels to monitor each of several selected plant conditions which will cause a reactor trip if any one of these conditions deviates from a pre-selected operating range to the degree that a safety limit may be reached.

The trip setting limits for protective system instrumentation are listed in Table 2.3-1A - Unit 1. The safety analysis has been based upon these protective
2.3-1B - Unit 2
2.3-1C - Unit 3
system instrumentation trip set points plus calibration and instrument errors.

Nuclear Overpower

A reactor trip at high power level (neutron flux) is provided to prevent damage to the fuel cladding from reactivity excursions too rapid to be detected by pressure and temperature measurements.

NOV 26 1974

During normal plant operation with all reactor coolant pumps operating, reactor trip is initiated when the reactor power level reaches 105.5% of rated power. Adding to this the possible variation in trip setpoints due to calibration and instrument errors, the maximum actual power at which a trip would be actuated could be 112%, which is more conservative than the value used in the safety analysis.(4)

Overpower Trip Based on Flow and Imbalance

The power level trip set point produced by the reactor coolant system flow is based on a power-to-flow ratio which has been established to accommodate the most severe thermal transient considered in the design, the loss-of-coolant flow accident from high power. Analysis has demonstrated that the specified power-to-flow ratio is adequate to prevent a DNBR of less than 1.3 should a low flow condition exist due to any electrical malfunction.

The power level trip set point produced by the power-to-flow ratio provides both high power level and low flow protection in the event the reactor power level increases or the reactor coolant flow rate decreases. The power level trip set point produced by the power-to-flow ratio provides overpower DNB protection for all modes of pump operation. For every flow rate there is a maximum permissible power level, and for every power level there is a minimum permissible low flow rate. Typical power level and low flow rate combinations for the pump situations of Table 2.3-1A are as follows:

1. Trip would occur when four reactor coolant pumps are operating if power is 108% and reactor flow rate is 100%, or flow rate is 93% and power level is 100%.

2. Trip would occur when three reactor coolant pumps are operating if power is 81.0% and reactor flow rate is 74.7% or flow rate is 69% and power level is 75%.

3. Trip would occur when two reactor coolant pumps are operating in a single loop if power is 59% and the operating loop flow rate is 54.5% or flow rate is 43% and power level is 46%.

4. Trip would occur when one reactor coolant pump is operating in each loop (total of two pumps operating) if the power is 53% and reactor flow rate is 49.0% or flow rate is 45% and the power level is 49%.

For safety calculations the maximum calibration and instrumentation errors for the power level trip were used.

The power-imbalance boundaries are established in order to prevent reactor thermal limits from being exceeded. These thermal limits are either power peaking kw/ft limits or DNBR limits. The reactor power imbalance (power in the top half of core minus power in the bottom half of core) reduces the power level trip produced by the power-to-flow ratio such that the boundaries of Figure 2.3-2A1 } Unit 1 are produced. The power-to-flow ratio reduces the power | 16/11/3
2.3-2A2
2.3-2B - Unit 2
2.3-2C - Unit 3

NOV 26 1974

level trip and associated reactor power/reactor power-imbalance boundaries by
1.08% - Unit 1 for a 1% flow reduction.
1.07% - Unit 2
1.07% - Unit 3

Pump Monitors

The pump monitors prevent the minimum core DNBR from decreasing below 1.3 by tripping the reactor due to the loss of reactor coolant pump(s). The circuitry monitoring pump operational status provides redundant trip protection for DNB by tripping the reactor on a signal diverse from that of the power-to-flow ratio. The pump monitors also restrict the power level for the number of pumps in operation.

Reactor Coolant System Pressure

During a startup accident from low power or a slow rod withdrawal from high power, the system high pressure set point is reached before the nuclear overpower trip set point. The trip setting limit shown in Figure 2.3-1A - Unit 1
2.3-1B - Unit 2
2.3-1C - Unit 3
for high reactor coolant system pressure (2355 psig) has been established to maintain the system pressure below the safety limit (2750 psig) for any design transient.(1)

The low pressure (1985) psig and variable low pressure ($13.77\ T_{out} - 6181$) trip 16/11/3
(1800) psig ($16.25\ T_{out} - 7756$)
(1800) psig ($16.25\ T_{out} - 7756$)
setpoints shown in Figure 2.3-1A have been established to maintain the DNB
2.3-1B
2.3-1C
ratio greater than or equal to 1.3 for those design accidents that result in a pressure reduction.(2,3)

Due to the calibration and instrumentation errors the safety analysis used a variable low reactor coolant system pressure trip value of ($13.77\ T_{out} - 6221$) 16/11/3
($16.25\ T_{out} - 7796$)
($16.25\ T_{out} - 7796$)

Coolant Outlet Temperature

The high reactor coolant outlet temperature trip setting limit (619 F) shown in Figure 2.3-1A has been established to prevent excessive core coolant
2.3-1B
2.3-1C
temperatures in the operating range. Due to calibration and instrumentation errors, the safety analysis used a trip set point of 620°F.

Reactor Building Pressure

The high reactor building pressure trip setting limit (4 psig) provides positive assurance that a reactor trip will occur in the unlikely event of a loss-of-coolant accident, even in the absence of a low reactor coolant system pressure trip.

NOV 26 1974

Shutdown Bypass

In order to provide for control rod drive tests, zero power physics testing, and startup procedures, there is provision for bypassing certain segments of the reactor protection system. The reactor protection system segments which can be bypassed are shown in Table 2.3-1A. Two conditions are imposed when

2.3-1B
2.3-1C

the bypass is used:

1. By administrative control the nuclear overpower trip set point must be reduced to a value ≤ 5.0% of rated power during reactor shutdown.

2. A high reactor coolant system pressure trip setpoint of 1720 psig is automatically imposed.

The purpose of the 1720 psig high pressure trip set point is to prevent normal operation with part of the reactor protection system bypassed. This high pressure trip set point is lower than the normal low pressure trip set point so that the reactor must be tripped before the bypass is initiated. The over power trip set point of ≤ 5.0% prevents any significant reactor power from being produced when performing the physics tests. Sufficient natural circulation (5) would be available to remove 5.0% of rated power if none of the reactor coolant pumps were operating.

Two Pump Operation

A. Two Loop Operation

Operation with one pump in each loop will be allowed only following reactor shutdown. After shutdown has occurred, the following actions will permit operation with one pump in each loop:
1. Reset the pump contact monitor power level trip setpoint to 55.0%.
2. (Unit 1) Reset the protective system maximum allowable setpoint as shown in Figure 2.3-2A2.

16/11/3

B. Single Loop Operation

Single loop operation is permitted only after the reactor has been tripped. After the pump contact monitor trip has occurred, the following actions will permit single loop operation:
1. Reset the pump contact monitor power level trip setpoint to 55.0%.
2. Trip one of the two protective channels receiving outlet temperature information from sensors in the Idle Loop.
3. (Unit 1) Reset the protective system maximum allowable setpoints as shown in Figure 2.3-2A2. Tripping one of the two protective channels receiving outlet temperature information from the idle loop assures a protective system trip logic of one out of two.

16/11/3

(1) FSAR, Section [illegible]
(2) FSAR, Section 14.1.2.7
(3) FSAR, Section 14.1.2.8
(4) FSAR, Section 14.1.2.3
(5) FSAR, Section 14.1.2.6

NOV 26 1974

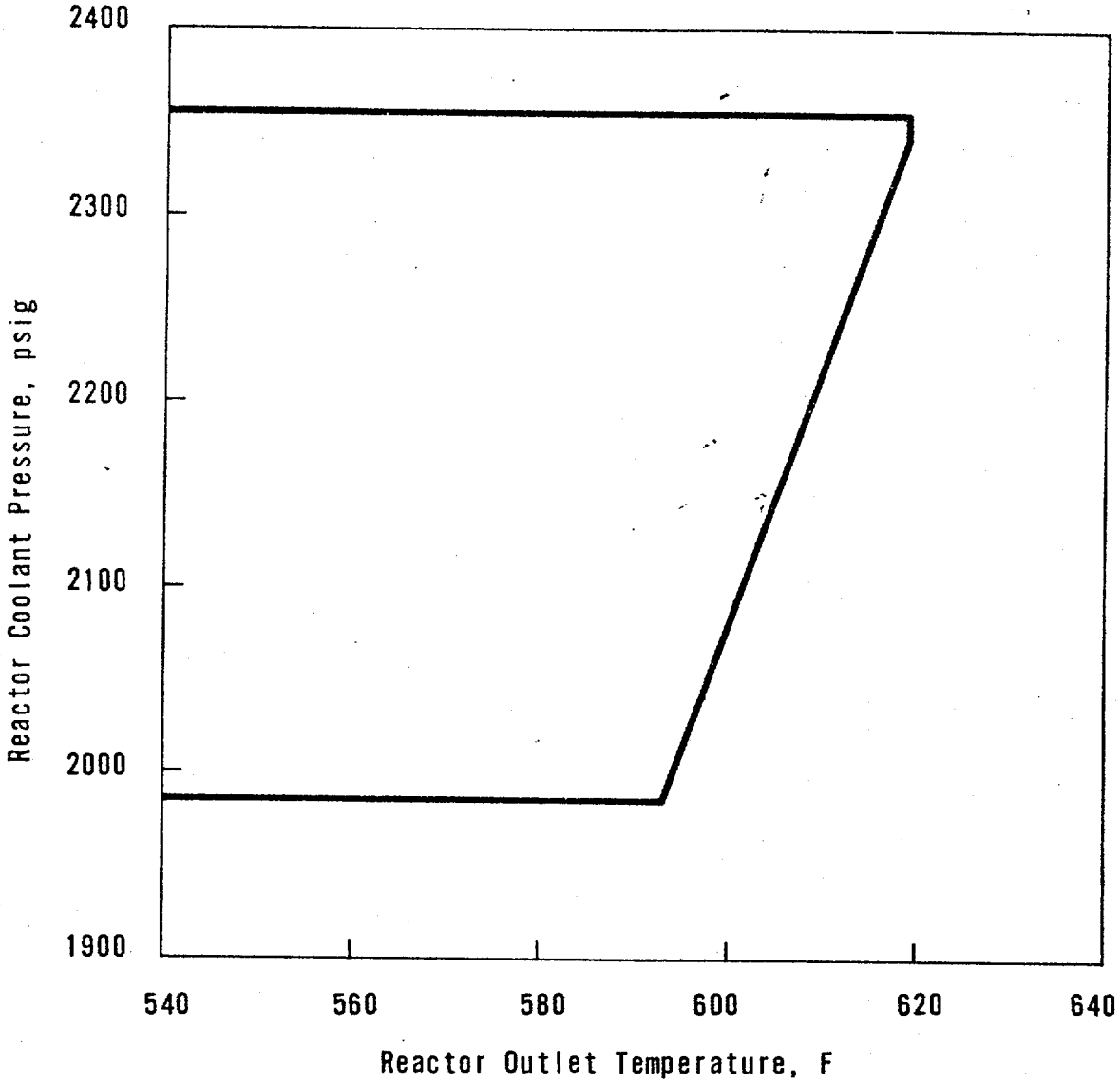

PROTECTIVE SYSTEM MAXIMUM
ALLOWABLE SET POINTS

UNIT 1

OCONEE NUCLEAR STATION
Figure 2.3-1A 16/11/3

NOV 26 1974

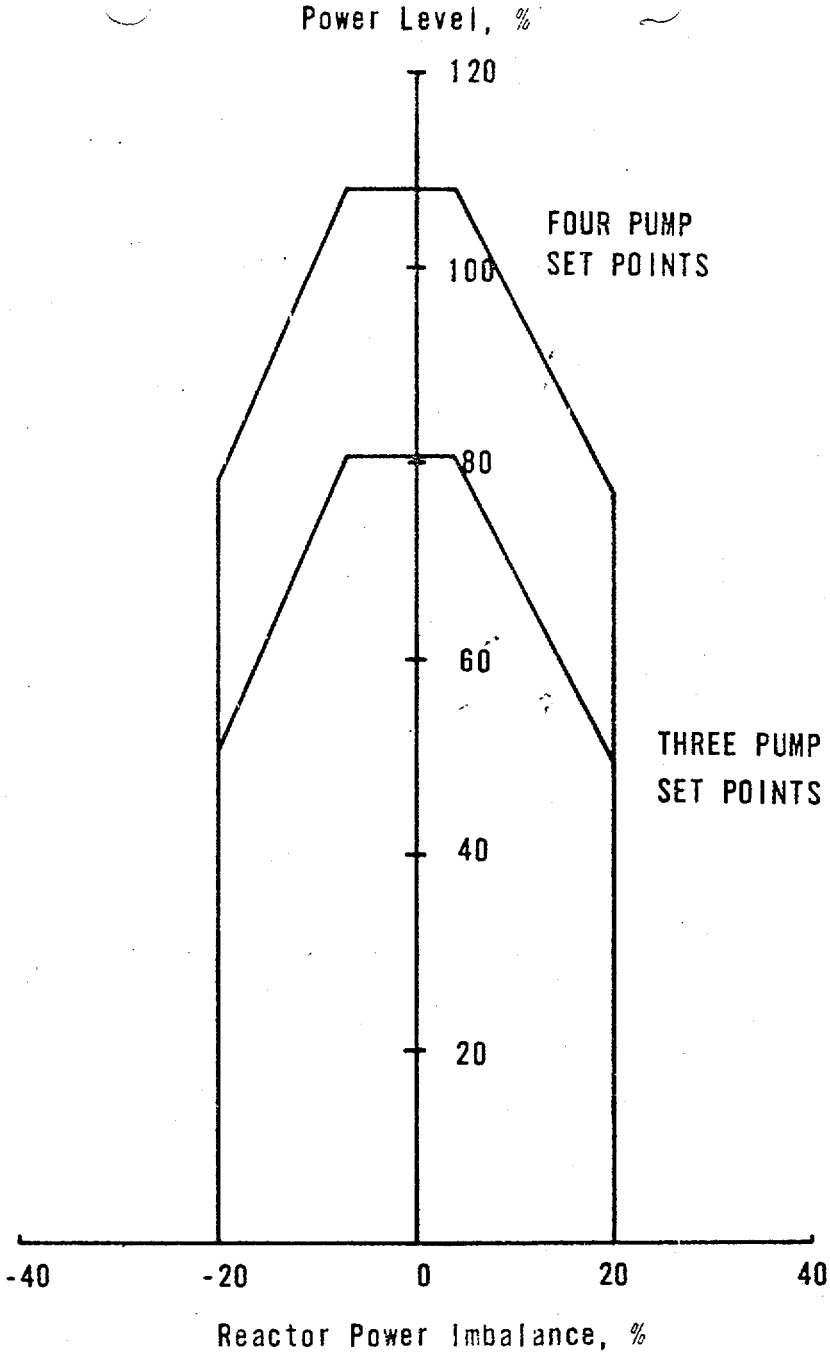

PROTECTIVE SYSTEM MAXIMUM
ALLOWABLE SET POINTS

UNIT 1

OCONEE NUCLEAR STATION

Figure 2.3-2A1 | 16/11/

NOV 26 1974

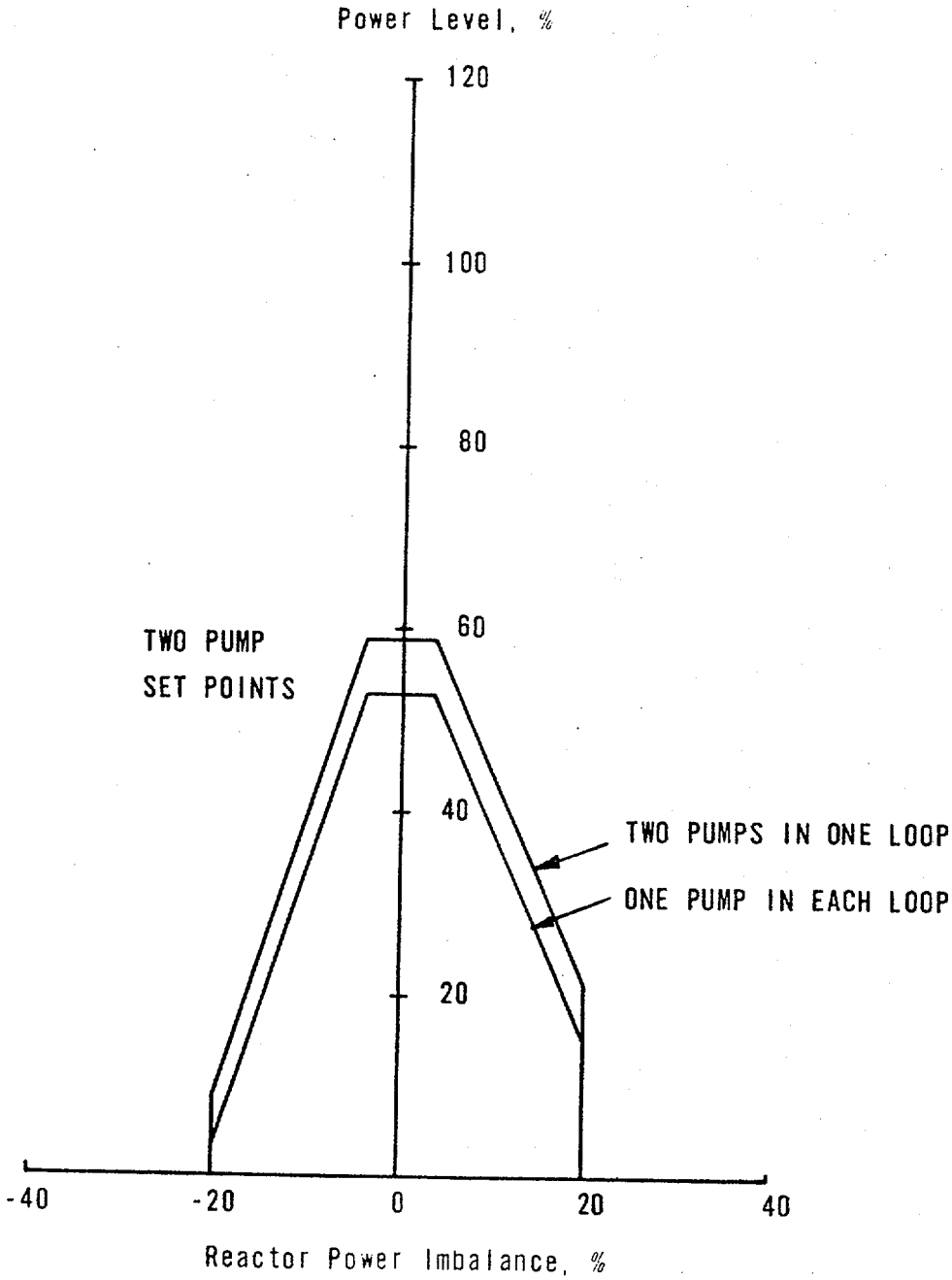

PROTECTIVE SYSTEM MAXIMUM
ALLOWABLE SET POINTS

UNIT 1

OCONEE NUCLEAR STATION

Figure 2.3-2A2 | 16/11/3

NOV 26 1974

Table 2.3-1A
Unit 1

Reactor Protective System Trip Setting Limits

RPS Segment	Four Reactor Coolant Pumps Operating (Operating Power -100% Rated)	Three Reactor Coolant Pumps Operating (Operating Power -75% Rated)	Two Reactor Coolant Pumps Operating in A Single Loop (Operating Power -46% Rated)	One Reactor Coolant Pump Operating in Each Loop (Operating Power -49% Rated)	Shutdown Bypass
1. Nuclear Power Max. (% Rated)	105.5	105.5	105.5	105.5	5.0(3)
2. Nuclear Power Max. Based on Flow (2) and Imbalance, (% Rated)	1.08 times flow minus reduction due to imbalance	1.08 times flow minus reduction due to imbalance	1.08 times flow minus reduction due to imbalance	1.08 times flow minus reduction due to imbalance	Bypassed
3. Nuclear Power Max. Based on Pump Monitors, (%, Rated)	NA	NA	55% (5)(6)	55% (5)	Bypassed
4. High Reactor Coolant System Pressure, psig, Max.	2355	2355	2355	2355	1720(4)
5. Low Reactor Coolant System Pressure, psig, Min.	1985	1985	1985	1985	Bypassed
6. Variable Low Reactor Coolant System Pressure psig, Min.	$(13.77\ T_{out} - 6181)$(1)	$(13.77\ T_{out} - 6181)$(1)	$(13.77\ T_{out} - 6181)$(1)	$(13.77\ T_{out} - 6181)$(1)	Bypassed
7. Reactor Coolant Temp. F., Max.	619	619	619 (6)	619	619
8. High Reactor Building Pressure, psig, Max.	4	4	4	4	4

16/11

(1) T_{out} is in degrees Fahrenheit (^{o}F).

(2) Reactor Coolant System Flow, %.

(3) Administratively controlled reduction set only during reactor shutdown.

(4) Automatically set when other segments of the RPS are bypassed.

(5) Reactor power level trip set point produced by pump contact monitor reset to 55.0%.

(6) Specification 3.1.8 applies. Trip one of the two protection channels receiving outlet temperature information from sensors in the idle loop.

NOV 26 1974

1. Rod index is the [illegible]centage sum of the withdrawal of the [illegible]ating groups.

2. These withdrawal limits are effective only for 250 ± 5 full power days of operation after issuance of Amendments No. 6, 6 and 3, respectively, of Licenses No. DPR-38, -47, and -55.

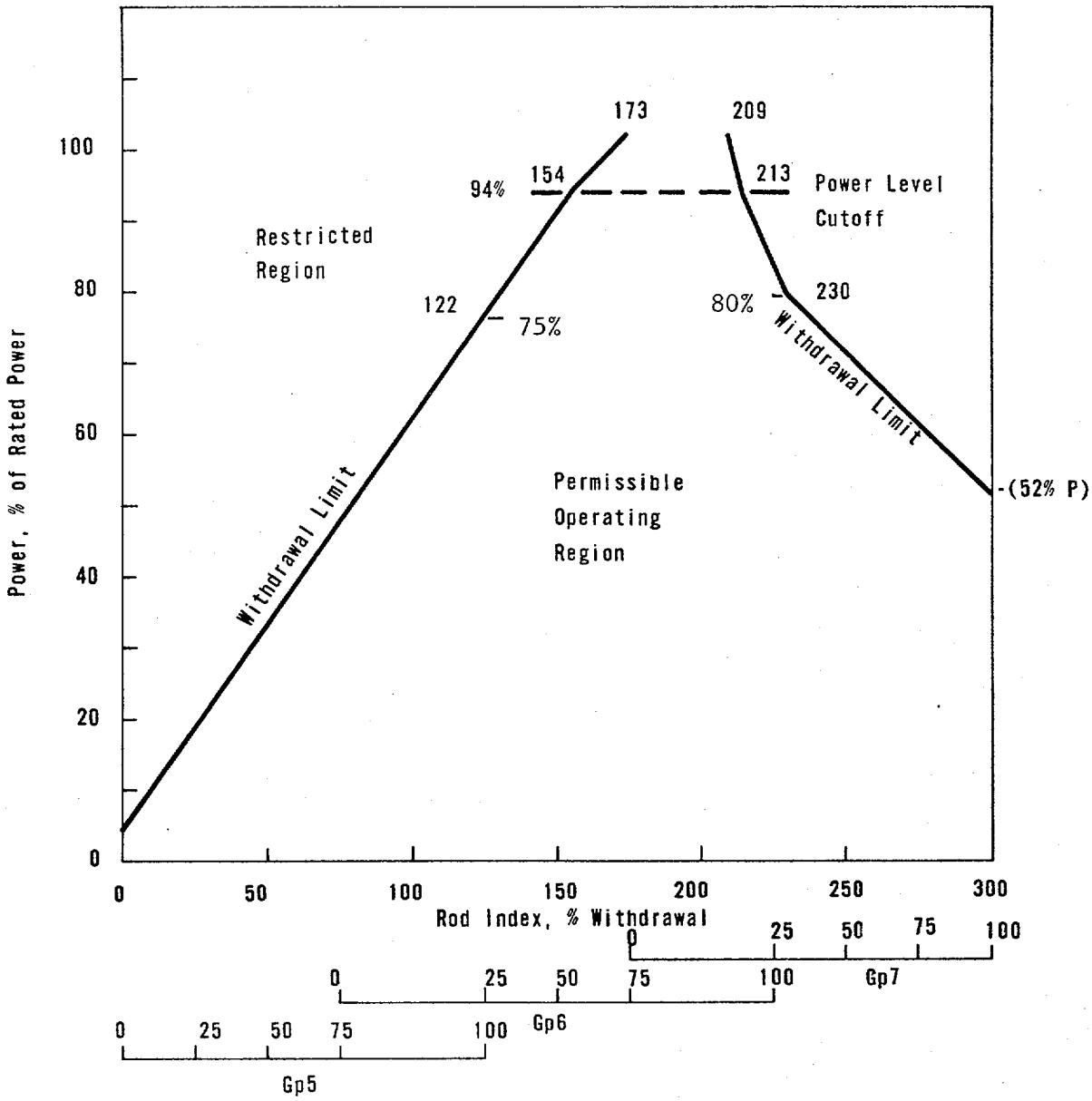

CONTROL ROD GROUP WITHDRAWAL LIMITS FOR 4 PUMP OPERATION

UNIT 1

OCONEE NUCLEAR STATION

Figure 3.5.2-1A1 | 16/11/3

NOV 26 1974

BLANK PAGE

NOV 26 1974

1. Rod index is the percentage sum of the withdrawal of the operating groups. (The applicable power level cutoff is 100% power)

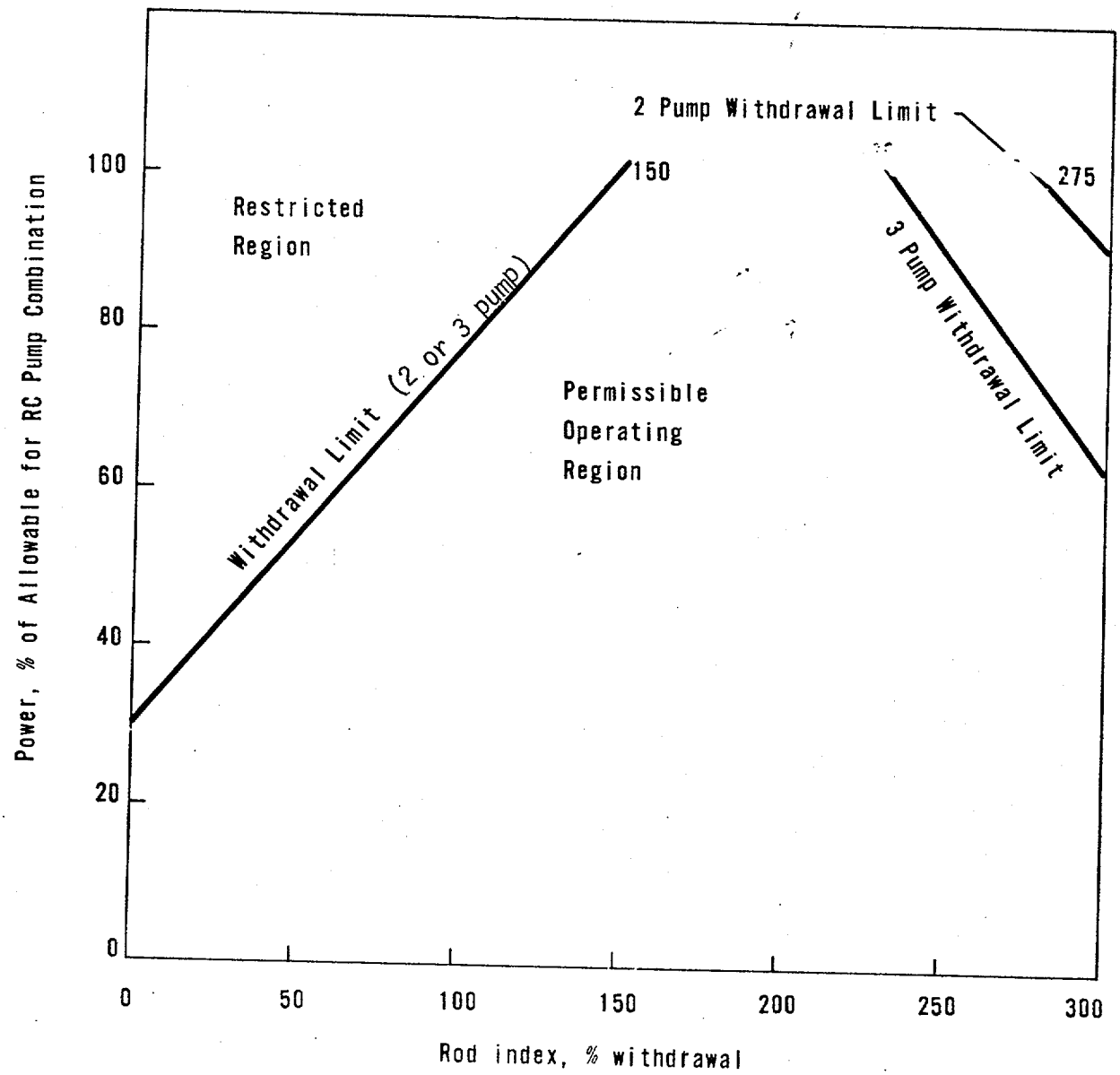

CONTROL ROD GROUP WITHDRAWAL LIMITS FOR 3 AND 2 PUMP OPERATION

UNIT 1

OCONEE NUCLEAR STATION

Figure 3.5.2-2A | 16/11/3

NOV 26 1974

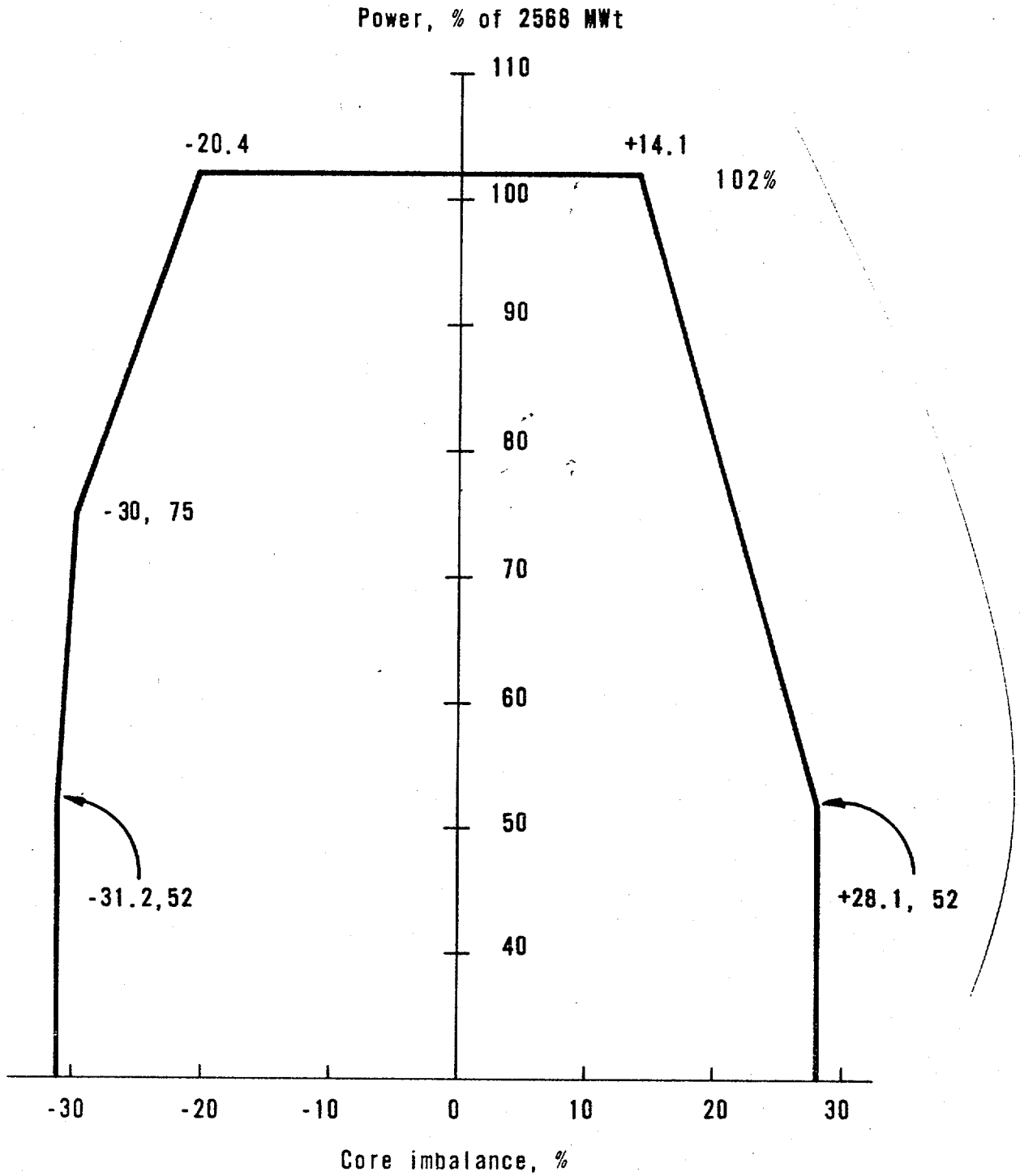

OPERATIONAL POWER IMBALANCE ENVELOPE

UNIT 1

OCONEE NUCLEAR STATION

Figure 3.5.2-3A | 16/11/

NOV 26 1974

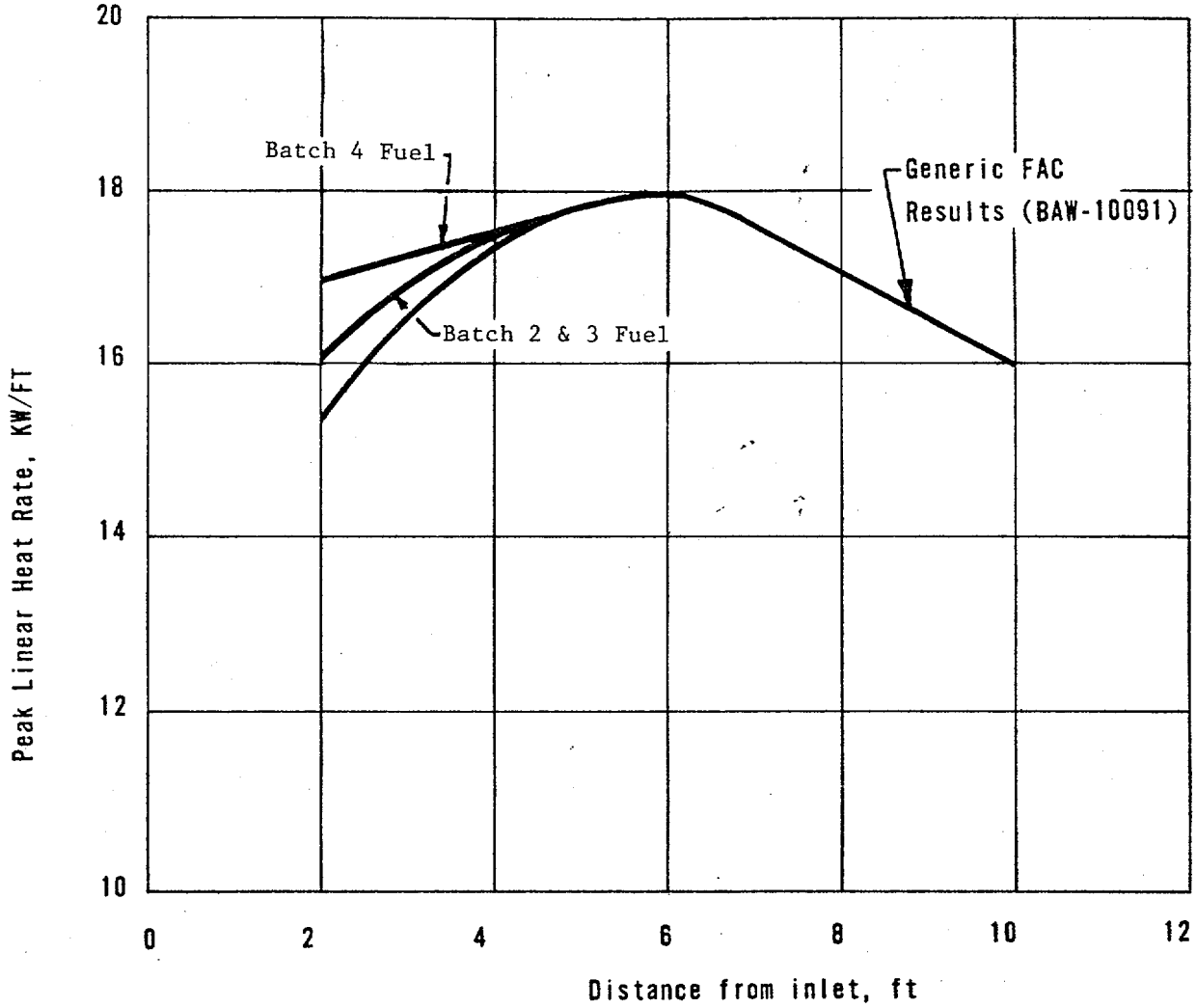

LOCA LIMITED MAXIMUM ALLOWABLE LINEAR HEAT RATE

OCONEE NUCLEAR STATION

Figure 3.5.2-4 16/11/3

NOV 26 1974

3.11 MAXIMUM POWER RESTRICTION

Applicability

Applies to the nuclear steam supply system of Units 2 and 3 reactors.

Objective

To maintain core life margin in reserve until the system has performed under operating conditions and design objectives for a significant period of time.

Specification

16/11/3

3.11.1 The first reactor core in Unit 2 may not be operated beyond 11,040 effective full power hours until supporting analysis and data pertinent to fuel clad collapse under fuel densification conditions have been approved by the Directorate of Licensing.

3.11.2 The first reactor core in Unit 3 may not be operated beyond 10,944 effective full power hours until supporting analysis and data pertinent to fuel clad collapse under fuel densification conditions have been approved by the Directorate of Licensing.

Bases

The licensing staff has reviewed the effects of fuel densification for the first core in Oconee Units 2 and 3 and concluded that clad collapse will not take place within the first fuel cycle (11,040 effective full power hours for Unit 3 and 10,944 effective full power hours for Unit 3). However, the clad collapse model used is questionable for extrapolation of clad collapse time out beyond the first fuel cycle because of limited experimental verification. 16/11/3

NOV 26 1974

3.5.2 Control Rod Group and Power Distribution Limits

Applicability

This specification applies to power distribution and operation of control rods during power operation.

Objective

To assure an acceptable core power distribution during power operation, to set a limit on potential reactivity insertion from a hypothetical control rod ejection, and to assure core subcriticality after a reactor trip.

Specification

3.5.2.1 The available shutdown margin shall be not less than 1% $\Delta k/k$ with the highest worth control rod fully withdrawn.

3.5.2.2 Operation with inoperable rods:

a. If a control rod is misaligned with its group average by more than an indicated nine (9) inches, the rod shall be declared inoperable. The rod with the greatest misalignment shall be evaluated first. The position of a rod declared inoperable due to misalignment shall not be included in computing the average position of the group for determining the operability of rods with lesser misalignments.

b. If a control rod cannot be exercised, or if it cannot be located with absolute or relative position indications or in or out limit lights, the rod shall be declared to be inoperable.

c. If a control rod cannot meet the requirements of Specification 4.7.1, the rod shall be declared inoperable.

d. If a control rod is found to be improperly programmed per Specification 4.7.2, the rod shall be declared inoperable until properly programmed.

e. Operation with more than one inoperable rod in the safety or regulating rod groups shall not be permitted.

f. If a control rod in the regulating or safety rod groups is declared inoperable in the withdrawn position, an evaluation shall be initiated immediately to verify the existance of 1% $\Delta k/k$ hot shutdown margin. Boration may be initiated either to the worth of the inoperable rod or until the regulating and transient rod groups are fully withdrawn, whichever occurs first. Simultaneously, a program of exercising the remaining regulating and safety rods shall be initiated to verify operability.

NOV 26 1974

g. If within one (1) hour of determination of an inoperable rod, it is not determined that a 1%Δk/k hot shutdown margin exists combining the worth of the inoperable rod with each of the other rods, the reactor shall be brought to the hot standby condition until this margin is established.

h. Following the determination of an inoperable rod, all rods shall be exercised within 24 hours and exercised weekly until the rod problem is solved.

i. If a control rod in the regulating or safety rod groups is declared inoperable, power shall be reduced to 60 percent of the thermal power allowable for the reactor coolant pump combination.

j. If a control rod in the regulating or axial power shaping groups is declared inoperable, operation above 60 percent of rated power may continue provided the rods in the group are positioned such that the rod that was declared inoperable is maintained within allowable group average position limits of Specification 3.5.2.2.a and the withdrawal limits of Specification 3.5.2.5.c.

3.5.2.3 The worth of a single inserted control rod shall not exceed 0.5% Δk/k at rated power or 1.0% Δk/k at hot zero power except for physics testing when the requirements of Specification 3.1.9 shall apply.

3.5.2.4 Quadrant Power Tilt

a. Whenever the quadrant power tilt exceeds 4 percent, except for physics tests, the quadrant tilt shall be reduced to less than 4 percent within two hours or the following actions shall be taken:

(1) If four reactor coolant pumps are in operation, the allowable thermal power shall be reduced by 2 percent of full power for each 1 percent tilt in excess of 4 percent below the power level cutoff (see Figures 3.5.2-1A1, 3.5.3-1B1, 3.5.2-1B2, 3.5.2-1B3, 3.5.2-1C1, 3.5.2-1C2, and 3.5.2-1C3). 16/11/3

(2) If less than four reactor coolant pumps are in operation, the allowable thermal power shall be reduced by 2 percent of full power for each 1 percent tilt below the power allowable for the reactor coolant pump combination as defined by Specification 2.3.

(3) Except as provided in 3.5.2.4.b, the reactor shall be brought to the hot shutdown condition within four hours if the quadrant tilt is not reduced to less than 4 percent after 24 hours.

b. If the quadrant tilt exceeds 4 percent and there is simultaneous indication of a misaligned control rod per Specification 3.5.2.2, reactor operation may continue provided power is reduced to 60 percent of the thermal power allowable for the reactor coolant

NOV 26 1974

pump combination.

c. Except for physics tests, if quadrant tilt exceeds 9 percent, a controlled shutdown shall be initiated immediately and the reactor shall be brought to the hot shutdown condition within four hours.

d. Whenever the reactor is brought to hot shutdown pursuant to 3.5.2.4.a(3) or 3.5.2.4.c above, subsequent reactor operation is permitted for the purpose of measurement, testing, and corrective action provided the thermal power and the power range high flux setpoint allowable for the reactor coolant pump combination are restricted by a reduction of 2 percent of full power for each 1 percent tilt for the maximum tilt observed prior to shutdown.

e. Quadrant power tilt shall be monitored on a minimum frequency of once every two hours during power operation above 15 percent of rated power.

3.5.2.5 Control Rod Positions

a. Technical Specification 3.1.3.5 (safety rod withdrawal) does not prohibit the exercising of individual safety rods as required by Table 4.1-2 or apply to inoperable safety rod limits in Technical Specification 3.5.2.2.

b. Operating rod group overlap shall be 25% ± 5% between two sequential groups, except for physics tests.

c. Except for physics tests or exercising control rods, the control rod withdrawal limits are specified on Figures 3.5.2-1A1 (Unit 1), 3.5.2-1B1, 3.5.2-1B2 and 3.5.2-1B3 (Unit 2), and 3.5.2-1C1, 3.5.2-1C2, and 3.5.2-1C3 (Unit 3) for four pump operation and on Figures 3.5.2-2A (Unit 1), 3.5.2-2B (Unit 2), and 3.5.2-2C (Unit 3) for three or two pump operation. If the control rod position limits are exceeded, corrective measures shall be taken immediately to achieve an acceptable control rod position. Acceptable control rod positions shall then be attained within two hours. 16/11/

d. Except for physics tests, power shall not be increased above the power level cutoff as shown on Figure 3.5.2-1A1 (Unit 1), 3.5.2-1B1, 3.5.2-1B2, and 3.5.2-1B3 (Unit 2), and 3.5.2-1C1, 3.5.2-1C2, and 3.5.2-1C3 (Unit 3), unless the following requirements are met. 16/11/

(1) The xenon reactivity shall be within 10 percent of the value for operation at steady-state rated power.

(2) The xenon reactivity shall be asymptotically approaching the value for operation at steady-state rated power.

NOV 26 1974

3.5.2.6 Reactor power imbalance shall be monitored on a frequency not to exceed two hours during power operation above 40 percent rated power. Except for physics tests, imbalance shall be maintained within the envelope defined by Figures 3.5.2-3A, 3.5.2-3B, and 3.5.2-3C. If the imbalance is not within the envelope defined by Figure 3.5.2-3A, 3.5.2-3B, and 3.5.2-3C, corrective measures shall be taken to achieve an acceptable imbalance. If an acceptable imbalance is not achieved within two hours, reactor power shall be reduced until imbalance limits are met. 16/11/3

3.5.2.7 The control rod drive patch panels shall be locked at all times with limited access to be authorized by the superintendent.

16/11/3

NOV 26 1974

Bases

The power-imbalance envelope defined in Figures 3.5.2-3A, 3.5.2-3B, and 3.5.2-3C is based on LOCA analyses which have defined the maximum linear heat rate (see Figure 3.5.2-4) such that the maximum clad temperature will not exceed the Final Acceptance Criteria. Corrective measures will be taken immediately should the indicated quadrant tilt, rod position, or imbalance be outside their specified boundary. Operation in a situation that would cause the Final acceptance criteria to be approached should a LOCA occur is highly improbable because all of the power distribution parameters (quadrant tilt, rod position, and imbalance) must be at their limits while simultaneously all other engineering and uncertainty factors are also at their limits.** Conservatism is introduced by application of:

a. Nuclear uncertainty factors
b. Thermal calibration
c. Fuel densification effects
d. Hot rod manufacturing tolerance factors

The 25% ± 5% overlap between successive control rod groups is allowed since the worth of a rod is lower at the upper and lower part of the stroke. Control rods are arranged in groups or banks defined as follows:

Group	Function
1	Safety
2	Safety
3	Safety
4	Safety
5	Regulating
6	Regulating
7	Xenon transient override
8	APSR (axial power shaping bank)

The minimum available rod worth provides for achieving hot shutdown by reactor trip at any time assuming the highest worth control rod remains in the full out position.(1)

Inserted rod groups during power operation will not contain single rod worths greater than0.5% Δk/k. This value has been shown to be safe by the safety analysis of the hypothetical rod ejection accident.(2) A single inserted control rod worth of 1.0% Δk/k at beginning of life, hot, zero power would result in the same transient peak thermal power and, therefore, the same environmental consequences as a 0.5% Δk/k ejected rod worth at rated power.

Control rod groups are withdrawn in sequence beginning with Group 1. Groups 5, 6, and 7 are overlapped 25 percent. The normal position at power is for Groups 6 and 7 to be partially inserted.

**Actual operating limits depend on whether or not incore or excore detectors are used and their respective instrument and calibration errors. The method used to define the operating limits is defined in plant operating procedures.

NOV 26 1974

The quadrant power tilt limits set forth in Specification 3.5.2.4 have been established within the thermal analysis design base using the definition of quadrant power tilt given in Technical Specifications, Section 1.6. These limits in conjunction with the control rod position limits in Specification 3.5.2.5c ensure that design peak heat rate criteria are not exceeded during normal operation when including the effects of potential fuel densification.

The quadrant tilt and axial imbalance monitoring in Specifications 3.5.2.4 and 3.5.2.6, respectively, normally will be performed in the process computer. The two-hour frequency for monitoring these quantities will provide adequate surveillance when the computer is out of service.

Allowance is provided for withdrawal limits and reactor power imbalance limits to be exceeded for a period of two hours without specification violation. Acceptance rod positions and imbalance must be achieved within the two-hour time period or appropriate action such as a reduction of power taken.

16/11/3

Operating restrictions are included in Technical Specification 3.5.2.5d to prevent excessive power peaking by transient xenon. The xenon reactivity must be beyond the "undershoot" region and asymptotically approaching its equilibrium value at rated power.

REFERENCES

[1] Section 3.2.2.1.2

[2] Section 14.2.2.2

NOV 26 1974

DUKE POWER COMPANY

DOCKET NO. 50-270

OCONEE NUCLEAR STATION, UNIT 2

AMENDMENT TO FACILITY OPERATING LICENSE

Amendment No. 6
License No. DPR-47

1. The Atomic Energy Commission (the Commission) having found that:

   A. The application for amendment by Duke Power Company (the licensee) dated September 20, 1974, as supplemented October 8 and 31, 1974, complies with the standards and requirements of the Atomic Energy Act of 1954, as amended, and the Commission's rules and regulations set forth in 10 CFR Chapter I;

   B. The facility will operate in conformity with the application, the provisions of the Act, and the rules and regulations of the Commission;

   C. There is reasonable assurance (i) that the activities authorized by this amendment can be conducted without endangering the health and safety of the public, and (ii) that such activities will be conducted in compliance with the Commission's regulations;

   D. The issuance of this amendment will not be inimical to the common defense and security or to the health and safety of the public; and

   E. Prior public notice of this amendment is not required since the amendment does not involve a significant hazards consideration.

2. Accordingly, the license is amended by a change to the Technical Specifications as indicated in the attachment to this license amendment and Paragraph 3.B. of Facility License No. DPR-47 is hereby amended to read as follows:

OFFICE ➤						
SURNAME ➤						
DATE ➤						

"B. Technical Specifications

The Technical Specifications contained in Appendices A and B, as revised, are hereby incorporated in the license. The licensee shall operate the facility in accordance with the Technical Specifications, as revised by issued changes thereto through Change No. 11."

3. This license amendment is effective as of the date of its issuance.

FOR THE ATOMIC ENERGY COMMISSION

Original Signed by
Karl Goller

Karl R. Goller, Assistant Director
for Operating Reactors
Directorate of Licensing

Attachment:
Change No. 11 to Technical
Specifications

Date of Issuance: NOV 26 1974

OFFICE ➤						
SURNAME ➤						
DATE ➤						

ATTACHMENT TO LICENSE AMENDMENTS

AMENDMENT NO. 6 TO FACILITY LICENSE NO. DPR-38,
CHANGE NO. 16 TO TECHNICAL SPECIFICATIONS;

AMENDMENT NO. 6 TO FACILITY LICENSE NO. DPR-47,
CHANGE NO. 11 TO TECHNICAL SPECIFICATIONS;

AMENDMENT NO. 3 TO FACILITY LICENSE NO. DPR-55,
CHANGE NO. 3 TO TECHNICAL SPECIFICATIONS;

DUKE POWER COMPANY

OCONEE NUCLEAR STATION, UNITS 1, 2, AND 3

DOCKET NOS. 50-269, 50-270, AND 50-287

Revise Appendix A as follows:

Remove Pages	Insert New Pages
2.1-1 & 2.1-2	2.1-1 & 2.1-2
2.1-3	2.1-3, 2.1-3a, 2.1-3b & 2.1-4
2.1-4	2.1-4a
2.1-7	2.1-7
2.1-10	2.1-10
2.3-1 & 2.3-2	2.3-1 & 2.3-2
2.3-3 & 2.3-4	2.3-3 & 2.3-4
2.3-5	2.3-5
2.3-8	2.3-8 & 2.3-8a
2.3-11	2.3-11
3.5-12	3.5-12
3.5-13	3.5-13 Blank page
3.5-18	3.5-18
3.5-21	3.5-21

Remove Pages	Insert New Pages
3.5-24	3.5-24
3.11-1	3.11-1
3.5-6 & 3.5-7	3.5-6 & 3.5-7
3.5-8 & 3.5-9	3.5-8 & 3.5-9
3.5-10 & 3.5-11	3.5-10 & 3.5-11

2 SAFETY LIMITS AND LIMITING SAFETY SYSTEM SETTINGS

2.1 SAFETY LIMITS, REACTOR CORE

Applicability

Applies to reactor thermal power, reactor power imbalance, reactor coolant system pressure, coolant temperature, and coolant flow during power operation of the plant.

Objective

To maintain the integrity of the fuel cladding.

Specification

The combination of the reactor system pressure and coolant temperature shall not exceed the safety limit as defined by the locus of points established in Figure 2.1-1A-Unit 1. If the actual pressure/temperature point is below
2.1-1B-Unit 2
2.1-1C-Unit 3
and to the right of the line, the safety limit is exceeded.

The combination of reactor thermal power and reactor power imbalance (power in the top half of the core minus the power in the bottom half of the core expressed as a percentage of the rated power) shall not exceed the safety limit as defined by the locus of points (solid line) for the specified flow set forth in Figure 2.1-2A-Unit 1. If the actual reactor-thermal-power/power
2.1-2B-Unit 2
2.1-2C-Unit 3
imbalance point is above the line for the specified flow, the safety limit is exceeded.

Bases - Unit 1

The safety limits presented for Oconee Unit 1 have been generated using BAW-2 critical heat flux (CHF) correlation[1] and the actual measured flow rate at Oconee Unit 1 (2). This development is discussed in the Oconee 1, Cycle 2-Reload Report, reference (2). The flow rate utilized is 107.6 percent of the design flow (131.32 x 10^6 lbs/hr) based on four-pump operation.(2)

To maintain the integrity of the fuel cladding and to prevent fission product release, it is necessary to prevent overheating of the cladding under normal operating conditions. This is accomplished by operating within the nucleate boiling regime of heat transfer, wherein the heat transfer coefficient is large enough so that the clad surface temperature is only slightly greater than the coolant temperature. The upper boundary of the nucleate boiling regime is termed "departure from nucleate boiling" (DNB). At this point, there is a sharp reduction of the heat transfer coefficient, which would result in high cladding temperatures and the possibility of cladding failure. Although DNB is not an observable parameter during reactor operation, the observable parameters of neutron power, reactor coolant flow, temperature, and pressure

16/11/3

NOV 26 1974

can be related to DNB through the use of the BAW-2 correlation (1). The BAW-2 correlation has been developed to predict DNB and the location of DNB for axially uniform and non-uniform heat flux distributions. The local DNB ratio (DNBR), defined as the ratio of the heat flux that would cause DNB at a particular core location to the actual heat flux, is indicative of the margin to DNB. The minimum value of the DNBR, during steady-state operation, normal operational transients, and anticipated transients is limited to 1.32. A DNBR of 1.32 corresponds to a 95 percent probability at a 99 percent confidence level that DNB will not occur; this is considered a conservative margin to DNB for all operating conditions. The difference between the actual core outlet pressure and the indicated reactor coolant system pressure has been considered in determining the core protection safety limits. The difference in these two pressures is nominally 45 psi; however, only a 30 psi drop was assumed in reducing the pressure trip setponts to correspond to the elevated location where the pressure is actually measured.

The curve presented in Figure 2.1-1A represents the conditions at which a minimum DNBR of 1.32 is predicted for the maximum possible thermal power (112 percent) when four reactor coolant pumps are operating (minimum reactor coolant flow is 107.6 percent of 131.3 x 10^6 lbs/hr.). This curve is based on the combination of nuclear power peaking factors, with potential fuel densification effects, which result in a more conservative DNBR than any other shape that exists during normal operation.

The curves of Figure 2.1-2A are based on the more restrictive of two thermal limits and include the effects of potential fuel densification:

1. The 1.32 DNBR limit produced by the combination of the radial peak, axial peak and position of the axial peak that yields no less than a 1.32 DNBR.

2. The combination of radial and axial peak that causes central fuel melting at the hot spot. The limit is 20.15 kw/ft for Unit 1.

Power peaking is not a directly observable quantity and therefore limits have been established on the bases of the reactor power imbalance produced by the power peaking.

The specified flow rates for Curves 1, 2, 3 and 4 of Figure 2.1-2A correspond to the expected minimum flow rates with four pumps, three pumps, one pump in each loop and two pumps in one loop, respectively.

The curve of Figure 2.1-1A is the most restrictive of all possible reactor coolant pump-maximum thermal power combinations shown in Figure 2.1-3A (because the four-pump pressure - temperature restriction is known to be more limiting than the 3 and 2 pump combinations, only the four pump limit has been shown on Figure 2.1-3A).

The maximum thermal power for three-pump operation is 87 percent due to a power level trip produced by the flux-flow ratio 75 percent flow x 1.08 = 81 percent power, plus the maximum calibration and instrument error. The maximum thermal power for other coolant pump conditions are produced in a similar manner.

16/11/3

NOV 26 1974

For Figure 2.1-3A, a pressure-temperature point above and to the left of the curve would result in a DNBR greater than 1.32. The 1.32 DNBR curve for four-pump operation is more restrictive than any other reactor coolant pump situation because any pressure/temperature point above and to the left of the four pump curve will be above and to the left of the other curves.

16/11/

References

(1) Correlation of Critical Heat Flux in a Bundle Cooled by Pressurized Water, BAW-10000, March, 1970.

(2) Oconee 1, Cycle 2 - Reload Report - BAW-1409, Sepetmeber, 1974.

NOV 26 1974

Bases - Units 2 and 3

To maintain the integrity of the fuel cladding and to prevent fission product release, it is necessary to prevent overheating of the cladding under normal operating conditions. This is accomplished by operating within the nucleate boiling regime of heat transfer, wherein the heat transfer coefficient is large enough so that the clad surface temperature is only slightly greater than the coolant temperature. The upper boundary of the nucleate boiling regime is termed "departure from nucleate boiling" (DNB). At this point, there is a sharp reduction of the heat transfer coefficient, which would result in high cladding temperatures and the possibility of cladding failure. Although DNB is not an observable parameter during reactor operation, the observable parameters of neutron power, reactor coolant flow, temperature, and pressure can be related to DNB through the use of the W-3 correlation.(1) The W-3 correlation has been developed to predict DNB and the location of DNB for axially uniform and non-uniform heat flux distributions. The local DNB ratio (DNBR), defined as the ratio of the heat flux that would cause DNB at a particular core location to the actual heat flux, is indicative of the margin to DNB. The minimum value of the DNBR, during steady-state operation, normal operational transients, and anticipated transients is limited to 1.3. A DNBR of 1.3 corresponds to a 94.3 percent probability at a 99 percent confidence level that DNB will not occur; this is considered a conservative margin to DNB for all operating conditions. The difference between the actual core outlet pressure and the indicated reactor coolant system pressure has been considered in determining the core protection safety limits. The difference in these two pressures is nominally 45 psi; however, only a 30 psi drop was assumed in reducing the pressure trip setpoints to correspond to the elevated location where the pressure is actually measured.

The curve presented in Figure 2.1-1B represents the conditions at which a 16/1
2.1-1C 3
minimum DNBR of 1.3 is predicted for the maximum possible thermal power (112%) when four reactor coolant pumps are operating (minimum reactor coolant flow is 131.3 x 10^6 lbs/hr). This curve is based on the following nuclear power peaking factors(2) with potential fuel densification effects:

$$F_q^N = 2.67;\ F_{\Delta H}^N = 1.78;\ F_z^N = 1.50$$

The design peaking combination results in a more conservative DNBR than any other shape that exists during normal operation.

The curves of Figure 2.1-2B are based on the more restrictive of two thermal 16/11
2.1-2C 3
limits and include the effects of potential fuel densification:

1. The 1.3 DNBR limit produced by a nuclear power peaking factor of $F_q^N = 2.67$ or the combination of the radial peak, axial peak and position of the axial peak that yields no less than 1.3 DNBR.

2. The combination of radial and axial peak that causes central fuel melting at the hot spot. The limit is 19.8 kw/ft - Unit 2 16/11
19.8 kw/ft - Unit 3 3

NOV 26 1974

Power peaking is not a directly observable quantity and therefore limits have been established on the bases of the reactor power imbalance produced by the power peaking.

The specified flow rates for Curves 1, 2, 3, and 4 of Figure 2.1-2B correspond 16/11
2.1-2C 3
to the expected minimum flow rates with four pumps, three pumps, one pump in each loop and two pumps in one loop, respectively.

The curve of Figure 2.1-1B is the most restrictive of all possible reactor 16/11/
2.1-1C 3
coolant pump-maximum thermal power combinations shown in Figure 2.1-3B.
2.1-3C

The curves of Figure 2.1-3B represent the conditions at which a minimum DNBR 16/11/
2.1-3C 3
of 1.3 is predicted at the maximum possible thermal power for the number of reactor coolant pumps in operation or the local quality at the point of minimum DNBR is equal to 15%,(3) whichever condition is more restrictive.

Using a local quality limit of 15 percent at the point of minimum DNBR as a 16/11
basis for Curves 2 and 4 of Figure 2.1-3B is a conservative criterion even 3
2.1-3C
though the quality of the exit is higher than the quality at the point of minimum DNBR.

The DNBR as calculated by the W-3 correlation continually increases from point of minimum DNBR, so that the exit DNBR is 1.7 or higher, depending on the pressure. Extrapolation of the W-3 correlation beyond its published quality range of +15 percent is justified on the basis of experimental data.(4)

The maximum thermal power for three pump operation is 86% - Unit 2 16/11
86% - Unit 3 3
due to a power level trip produced by the flux-flow ratio 75% flow x 1.07 = 80%
1.07 = 80%
power
plus the maximum calibration and instrument error. The maximum thermal power for other coolant pump conditions are produced in a similar manner.

For each curve of Figure 2.1-3B, a pressure-temperature point above and to the 16/11
2.1-3C 3
left of the curve would result in a DNBR greater than 1.3 or a local quality at the point of minimum DNBR less than 15 percent for that particular reactor coolant pump situation. The 1.3 DNBR curve for four-pump operation is more restrictive than any other reactor coolant pump situation because any pressure/temperature point above and to the left of the four-pump curve will be above and to the left of the other curves.

REFERENCES

(1) FSAR, Section 3.2.3.1.1
(2) FSAR, Section 3.2.3.1.1.c
(3) FSAR, Section 3.2.3.1.1.k

NOV 26 1974

(4) The following papers which were presented at the Winter Annual Meeting, ASME, November 18, 1969, during the "Two-phase Flow and Heat Transfer in Rod Bundles Symposium:"

(a) Wilson, et al.
"Critical Heat Flux in Non-Uniform Heater Rod Bundles"

(b) Gellerstedt, et al.
"Correlation of a Critical Heat Flux in a Bundle Cooled by Pressurized Water"

NOV 26 1974

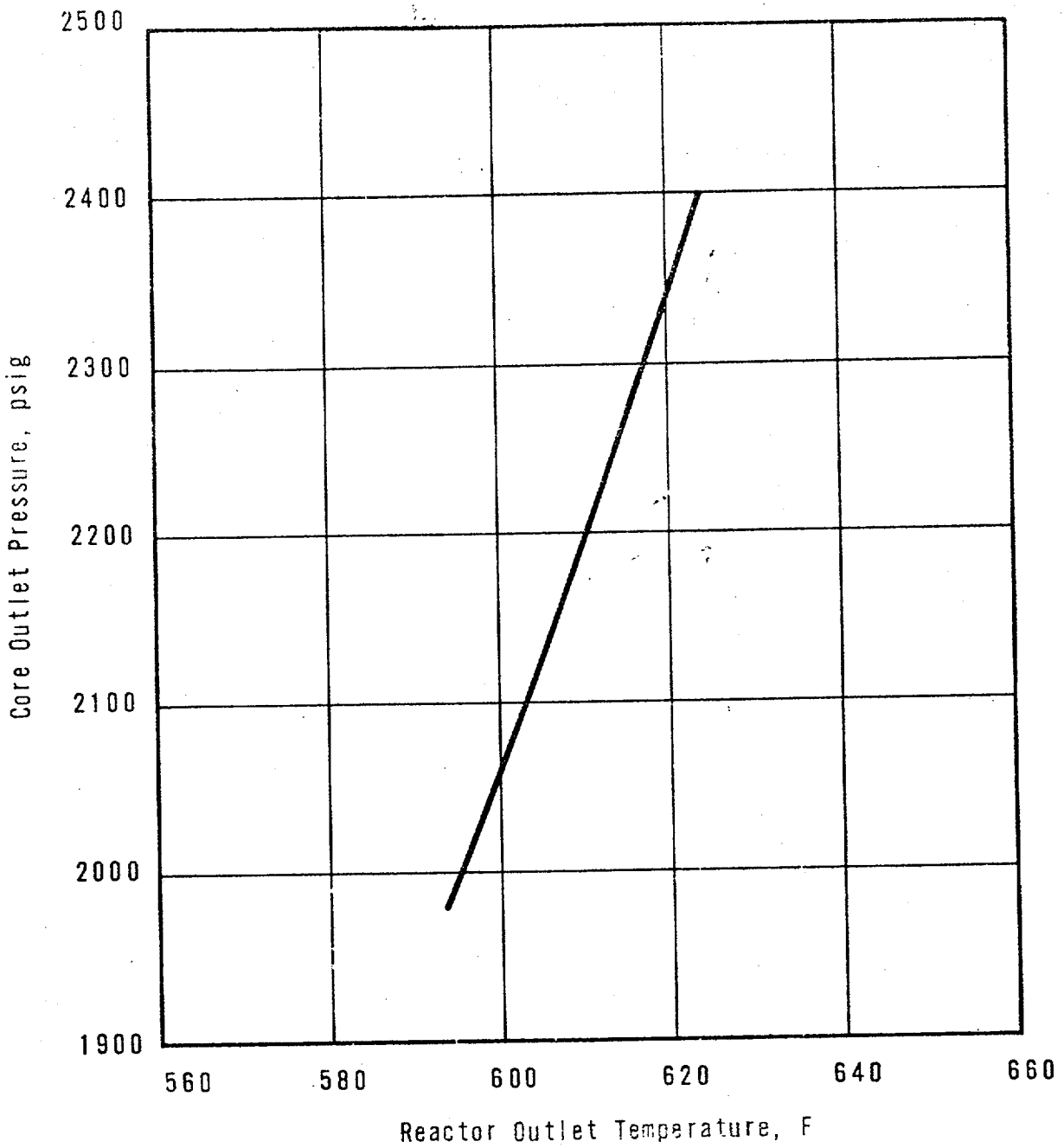

CORE PROTECTION SAFETY LIMITS

UNIT 1

2.1-[illegible]

OCONEE NUCLEAR STATION

Figure 2.1-1A | 16/11/3

NOV 26 1974

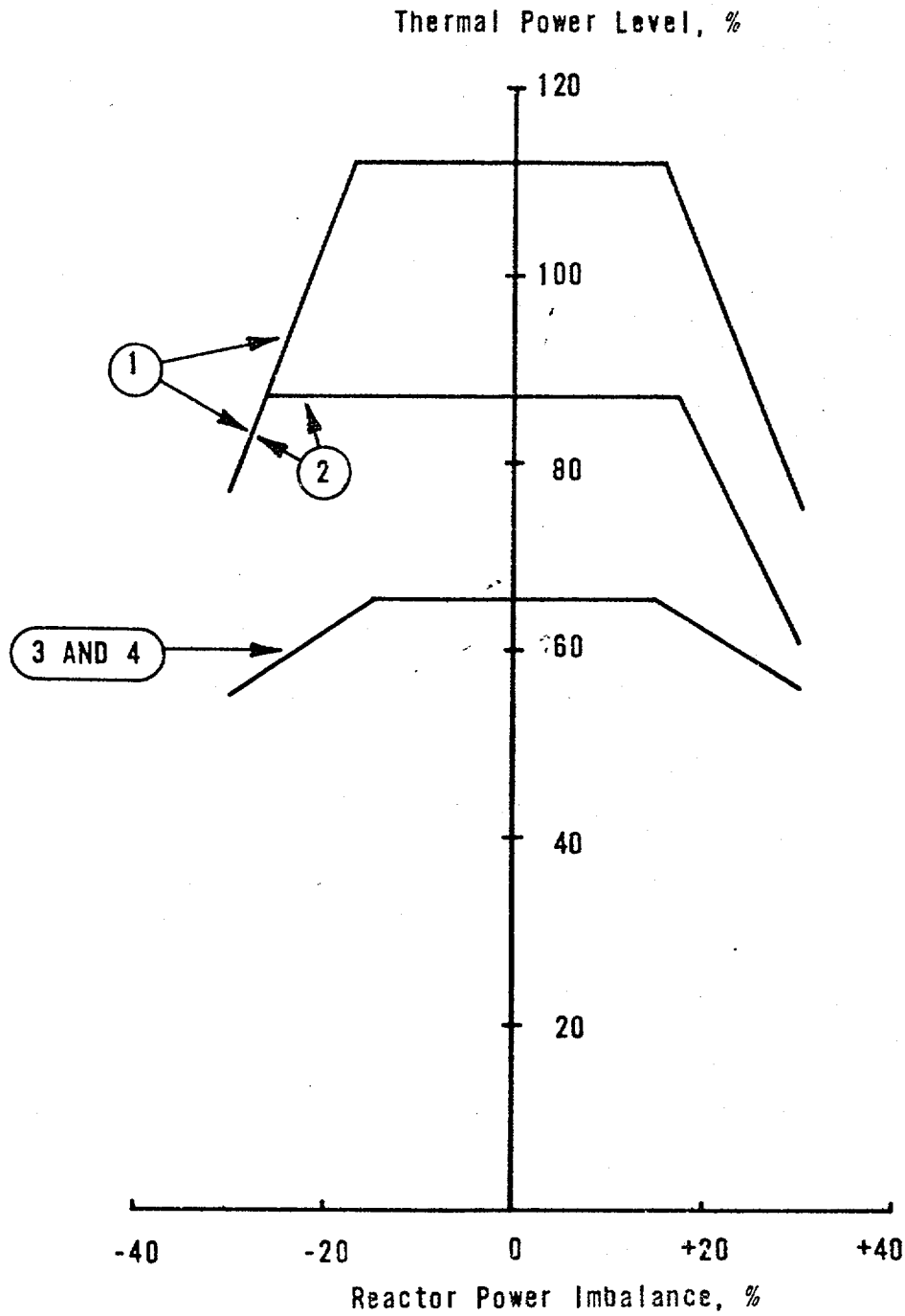

CURVE	REACTOR COOLANT FLOW (LB/HR)
1	131.3×10^6
2	98.1×10^6
3	64.4×10^6
4	60.1×10^6

CORE PROTECTION SAFETY LIMITS

UNIT 1

OCONEE NUCLEAR STATION

Figure 2.1-2A

NOV 26 1974

16/11/3

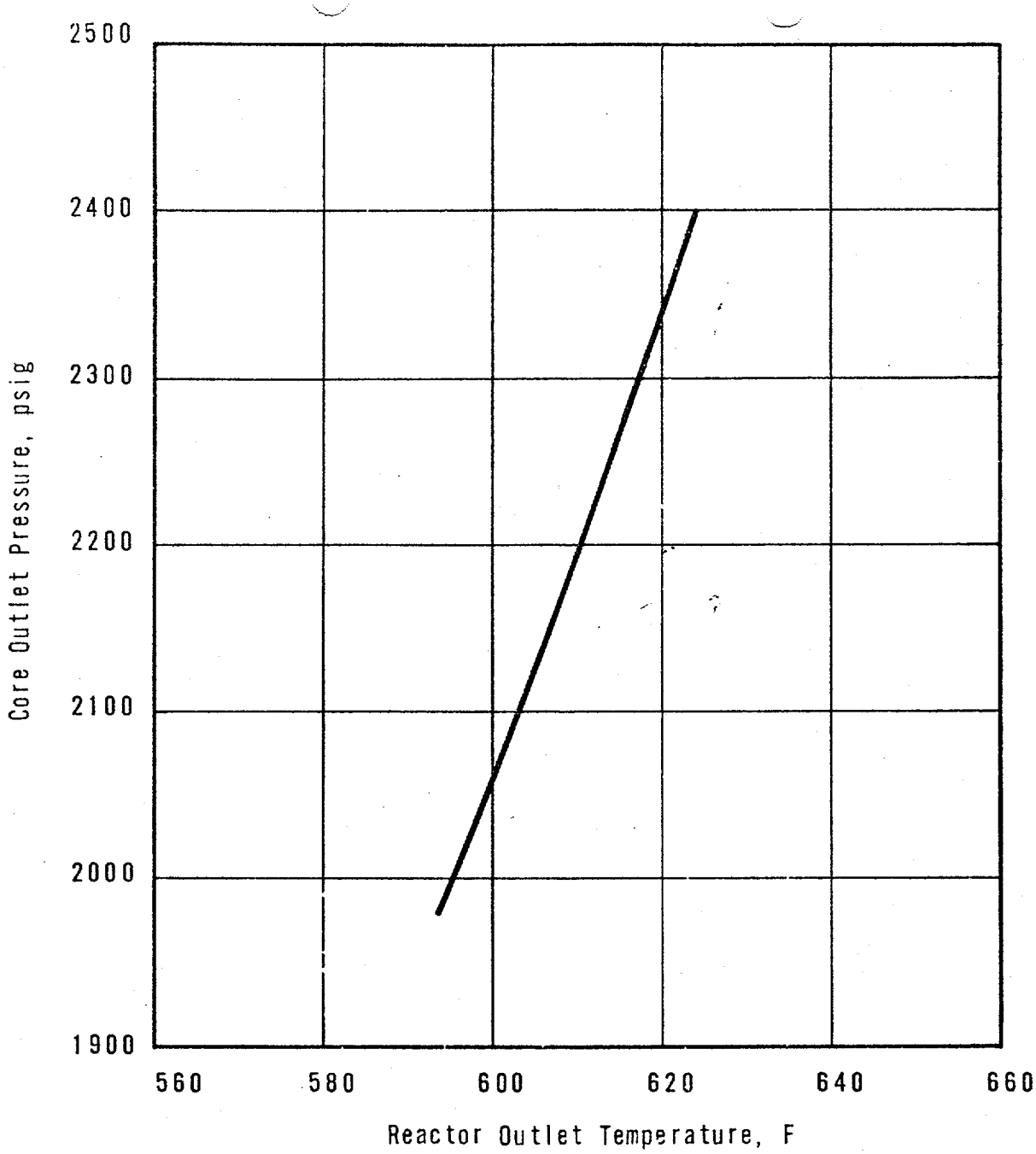

CORE PROTECTION SAFETY LIMITS

UNIT 1

OCONEE NUCLEAR STATION

Figure 2.1-3A | 16/11/3

NOV 26 1974

2.3 LIMITING SAFETY SYSTEM SETTINGS, PROTECTIVE INSTRUMENTATION

Applicability

Applies to instruments monitoring reactor power, reactor power imbalance, reactor coolant system pressure, reactor coolant outlet temperature, flow, number of pumps in operation, and high reactor building pressure.

Objective

To provide automatic protective action to prevent any combination of process variables from exceeding a safety limit.

Specification

The reactor protective system trip setting limits and the permissible bypasses for the instrument channels shall be as stated in Table 2.3-1A - Unit 1 and
2.3-1B - Unit 2
2.3-1C - Unit 3 16/11/3

Figure 2.3-2A1 } Unit 1
2.3-2A2
2.3-2B - Unit 2
2.3-2C - Unit 3

The pump monitors shall produce a reactor trip for the following conditions:

a. Loss of two pumps and reactor power level is greater than 55% (0.0% for Unit 1) of rated power. 16/11/3

b. Loss of two pumps in one reactor coolant loop and reactor power level is greater than 0.0% of rated power. (Power/RC pump trip setpoint is reset to 55% of rated power for single loop operation. Power/RC pump trip setpoint is reset to 55% for all modes of 2 pump operation for Unit 1.) 16/11/

c. Loss of one or two pumps during two-pump operation.

Bases

The reactor protective system consists of four instrument channels to monitor each of several selected plant conditions which will cause a reactor trip if any one of these conditions deviates from a pre-selected operating range to the degree that a safety limit may be reached.

The trip setting limits for protective system instrumentation are listed in Table 2.3-1A - Unit 1. The safety analysis has been based upon [illegible] protective
2.3-1B - Unit 2
2.3-1C - Unit 3
system instrumentation trip set points plus calibration and instrument errors.

Nuclear Overpower

A reactor trip at high power level (neutron flux) is provided to [illegible] damage to the fuel cladding from reactivity excursions too rapid to be detected by pressure and temperature measurements.

NOV 26 1974

During normal plant operation with all reactor coolant pumps operating, reactor trip is initiated when the reactor power level reaches 105.5% of rated power. Adding to this the possible variation in trip setpoints due to calibration and instrument errors, the maximum actual power at which a trip would be actuated could be 112%, which is more conservative than the value used in the safety analysis.(4)

Overpower Trip Based on Flow and Imbalance

The power level trip set point produced by the reactor coolant system flow is based on a power-to-flow ratio which has been established to accommodate the most severe thermal transient considered in the design, the loss-of-coolant flow accident from high power. Analysis has demonstrated that the specified power-to-flow ratio is adequate to prevent a DNBR of less than 1.3 should a low flow condition exist due to any electrical malfunction.

The power level trip set point produced by the power-to-flow ratio provides both high power level and low flow protection in the event the reactor power level increases or the reactor coolant flow rate decreases. The power level trip set point produced by the power-to-flow ratio provides overpower DNB protection for all modes of pump operation. For every flow rate there is a maximum permissible power level, and for every power level there is a minimum permissible low flow rate. Typical power level and low flow rate combinations for the pump situations of Table 2.3-1A are as follows:

1. Trip would occur when four reactor coolant pumps are operating if power is 108% and reactor flow rate is 100%, or flow rate is 93% and power level is 100%.

2. Trip would occur when three reactor coolant pumps are operating if power is 81.0% and reactor flow rate is 74.7% or flow rate is 69% and power level is 75%.

3. Trip would occur when two reactor coolant pumps are operating in a single loop if power is 59% and the operating loop flow rate is 54.5% or flow rate is 43% and power level is 46%.

4. Trip would occur when one reactor coolant pump is operating in each loop (total of two pumps operating) if the power is 53% and reactor flow rate is 49.0% or flow rate is 45% and the power level is 49%.

For safety calculations the maximum calibration and instrumentation errors for the power level trip were used.

The power-imbalance boundaries are established in order to prevent reactor thermal limits from being exceeded. These thermal limits are either power peaking kw/ft limits or DNBR limits. The reactor power imbalance (power in the top half of core minus power in the bottom half of core) reduces the power level trip produced by the power-to-flow ratio such that the boundaries of Figure 2.3-2A1 } Unit 1 are produced. The power-to-flow ratio reduces the power | 16/11/3
2.3-2A2
2.3-2B - Unit 2
2.3-2C - Unit 3

NOV 26 1974

level trip and associated reactor power/reactor power-imbalance boundaries by
1.08% - Unit 1 for a 1% flow reduction.
1.07% - Unit 2
1.07% - Unit 3

Pump Monitors

The pump monitors prevent the minimum core DNBR from decreasing below 1.3 by tripping the reactor due to the loss of reactor coolant pump(s). The circuitry monitoring pump operational status provides redundant trip protection for DNB by tripping the reactor on a signal diverse from that of the power-to-flow ratio. The pump monitors also restrict the power level for the number of pumps in operation.

Reactor Coolant System Pressure

During a startup accident from low power or a slow rod withdrawal from high power, the system high pressure set point is reached before the nuclear overpower trip set point. The trip setting limit shown in Figure 2.3-1A - Unit 1
2.3-1B - Unit 2
2.3-1C - Unit 3
for high reactor coolant system pressure (2355 psig) has been established to maintain the system pressure below the safety limit (2750 psig) for any design transient.(1)

The low pressure (1985) psig and variable low pressure ($13.77\ T_{out} - 6181$) trip 16/11/3
(1800) psig ($16.25\ T_{out} - 7756$)
(1800) psig ($16.25\ T_{out} - 7756$)
setpoints shown in Figure 2.3-1A have been established to maintain the DNB
2.3-1B
2.3-1C
ratio greater than or equal to 1.3 for those design accidents that result in a pressure reduction.(2,3)

Due to the calibration and instrumentation errors the safety analysis used a variable low reactor coolant system pressure trip value of ($13.77\ T_{out} - 6221$) 16/11/3
($16.25\ T_{out} - 7796$)
($16.25\ T_{out} - 7796$)

Coolant Outlet Temperature

The high reactor coolant outlet temperature trip setting limit (619 F) shown in Figure 2.3-1A has been established to prevent excessive core coolant
2.3-1B
2.3-1C
temperatures in the operating range. Due to calibration and instrumentation errors, the safety analysis used a trip set point of 620°F.

Reactor Building Pressure

The high reactor building pressure trip setting limit (4 psig) provides positive assurance that a reactor trip will occur in the unlikely event of a loss-of-coolant accident, even in the absence of a low reactor coolant system pressure trip.

NOV 26 1974

Shutdown Bypass

In order to provide for control rod drive tests, zero power physics testing, and startup procedures, there is provision for bypassing certain segments of the reactor protection system. The reactor protection system segments which can be bypassed are shown in Table 2.3-1A. Two conditions are imposed when

2.3-1B
2.3-1C

the bypass is used:

1. By administrative control the nuclear overpower trip set point must be reduced to a value $\leq$ 5.0% of rated power during reactor shutdown.

2. A high reactor coolant system pressure trip setpoint of 1720 psig is automatically imposed.

The purpose of the 1720 psig high pressure trip set point is to prevent normal operation with part of the reactor protection system bypassed. This high pressure trip set point is lower than the normal low pressure trip set point so that the reactor must be tripped before the bypass is initiated. The over power trip set point of $\leq$ 5.0% prevents any significant reactor power from being produced when performing the physics tests. Sufficient natural circulation (5) would be available to remove 5.0% of rated power if none of the reactor coolant pumps were operating.

Two Pump Operation

A. Two Loop Operation

Operation with one pump in each loop will be allowed only following reactor shutdown. After shutdown has occurred, the following actions will permit operation with one pump in each loop: 16/11/3

1. Reset the pump contact monitor power level trip setpoint to 55.0%.
2. (Unit 1) Reset the protective system maximum allowable setpoint as shown in Figure 2.3-2A2.

B. Single Loop Operation

Single loop operation is permitted only after the reactor has been tripped. After the pump contact monitor trip has occurred, the following actions will permit single loop operation:

1. Reset the pump contact monitor power level trip setpoint to 55.0%.
2. Trip one of the two protective channels receiving outlet temperature information from sensors in the Idle Loop.
3. (Unit 1) Reset the protective system maximum allowable setpoints as shown in Figure 2.3-2A2. Tripping one of the two protective channels receiving outlet temperature information from the idle loop assures a protective system trip logic of one out of two. 16/11/3

(1) FSAR, Section 14.1.2.2
(2) FSAR, Section 14.1.2.7
(3) FSAR, Section 14.1.2.8
(4) FSAR, Section 14.1.2.3
(5) FSAR, Section 14.1.2.6

NOV 26 1974

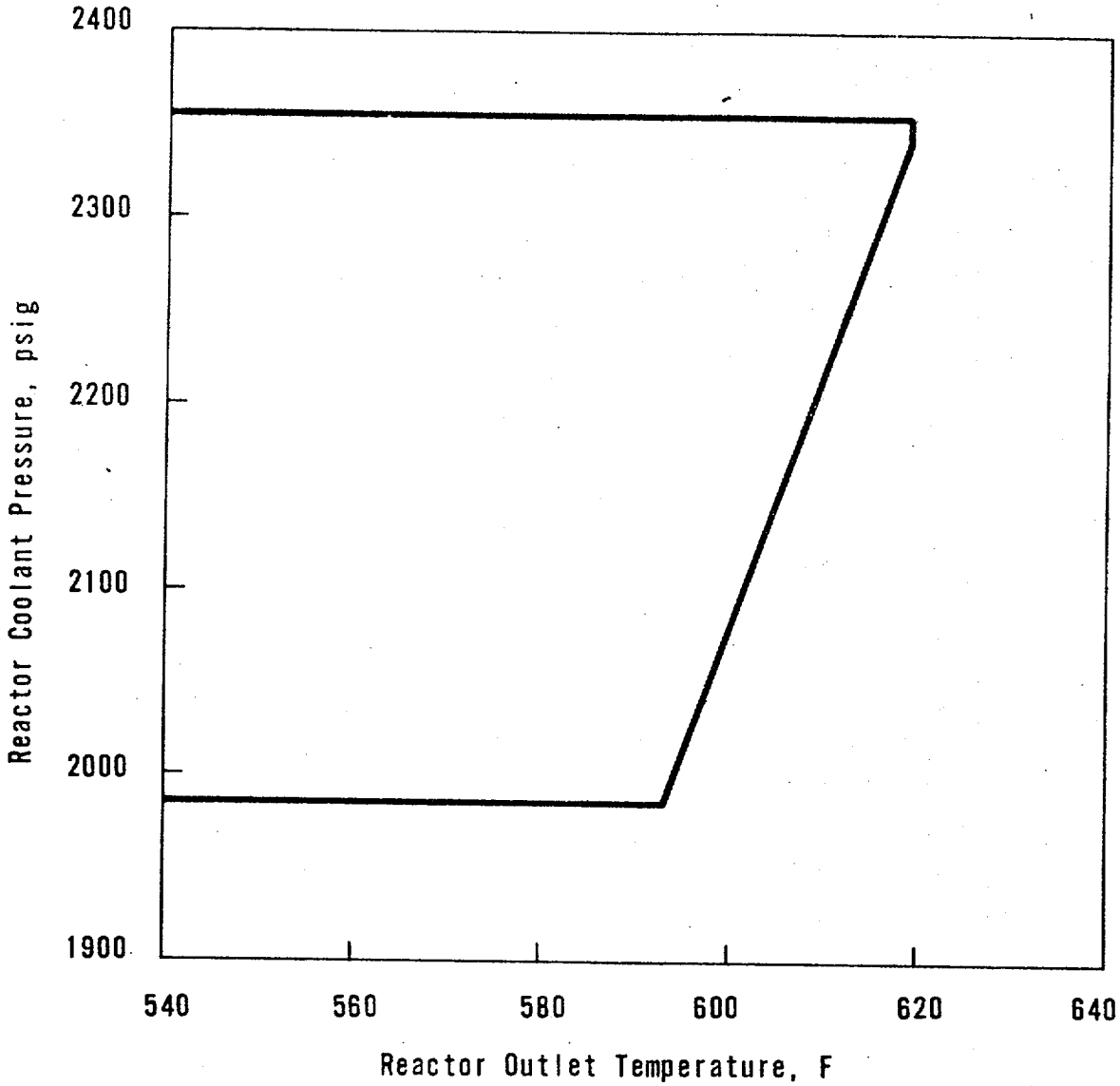

PROTECTIVE SYSTEM MAXIMUM
ALLOWABLE SET POINTS

UNIT 1

OCONEE NUCLEAR STATION
Figure 2.3-1A | 16/11/3

NOV 26 1974

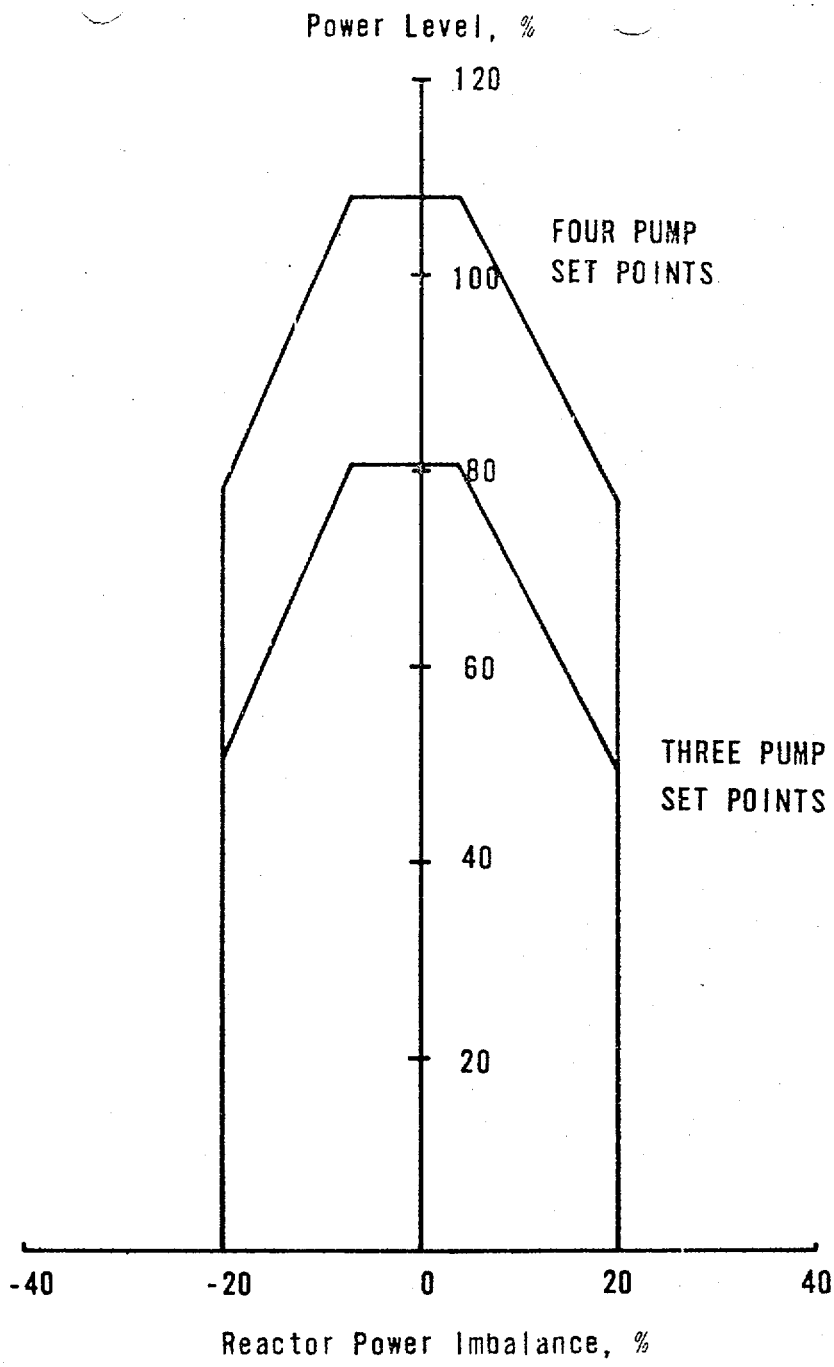

PROTECTIVE SYSTEM MAXIMUM
ALLOWABLE SET POINTS

UNIT 1

OCONEE NUCLEAR STATION

Figure 2.3-2A1 16/11/

NOV 26 1974

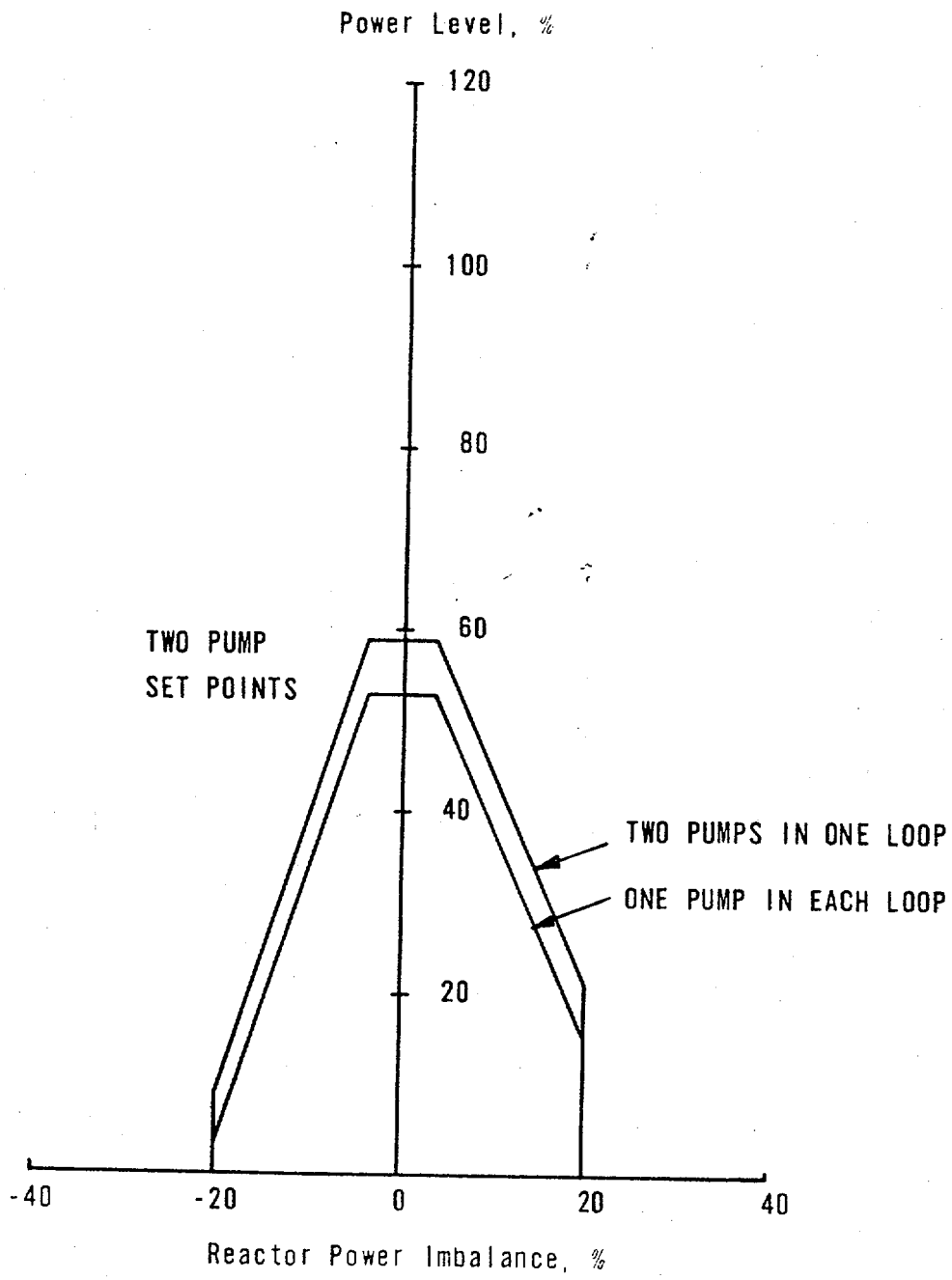

PROTECTIVE SYSTEM MAXIMUM
ALLOWABLE SET POINTS

UNIT 1

OCONEE NUCLEAR STATION

Figure 2.3-2A2 | 16/11/3

NOV 26 1974

Table 2.3-1A
Unit 1

Reactor Protective System Trip Setting Limits

RPS Segment	Four Reactor Coolant Pumps Operating (Operating Power -100% Rated)	Three Reactor Coolant Pumps Operating (Operating Power -75% Rated)	Two Reactor Coolant Pumps Operating in A Single Loop (Operating Power -46% Rated)	One Reactor Coolant Pump Operating in Each Loop (Operating Power -49% Rated)	Shutdown Bypass
1. Nuclear Power Max. (% Rated)	105.5	105.5	105.5	105.5	5.0(3)
2. Nuclear Power Max. Based on Flow (2) and Imbalance, (% Rated)	1.08 times flow minus reduction due to imbalance	1.08 times flow minus reduction due to imbalance	1.08 times flow minus reduction due to imbalance	1.08 times flow minus reduction due to imbalance	Bypassed
3. Nuclear Power Max. Based on Pump Monitors, (%, Rated)	NA	NA	55% (5)(6)	55% (5)	Bypassed
4. High Reactor Coolant System Pressure, psig, Max.	2355	2355	2355	2355	1720(4)
5. Low Reactor Coolant System Pressure, psig, Min.	1985	1985	1985	1985	Bypassed
6. Variable Low Reactor Coolant System Pressure psig, Min.	$(13.77\ T_{out} - 6181)$(1)	$(13.77\ T_{out} - 6181)$(1)	$(13.77\ T_{out} - 6181)$(1)	$(13.77\ T_{out} - 6181)$(1)	Bypassed
7. Reactor Coolant Temp. F., Max.	619	619	619 (6)	619	619
8. High Reactor Building Pressure, psig, Max.	4	4	4	4	4

16/11

(1) T_{out} is in degrees Fahrenheit (^{o}F).

(2) Reactor Coolant System Flow, %.

(3) Administratively controlled reduction set only during reactor shutdown.

(4) Automatically set when other segments of the RPS are bypassed.

(5) Reactor power level trip set point produced by pump contact monitor reset to 55.0%.

(6) Specification 3.1.8 applies. Trip one of the two protection channels receiving outlet temperature information from sensors in the idle loop.

NOV 26 1974

1. Rod index is the percentage sum of the withdrawal of the operating groups.

2. These withdrawal limits are effective only for 250 ± 5 full power days of operation after issuance of Amendments No. 6, 6 and 3, respectively, of Licenses No. DPR-38, -47, and -55.

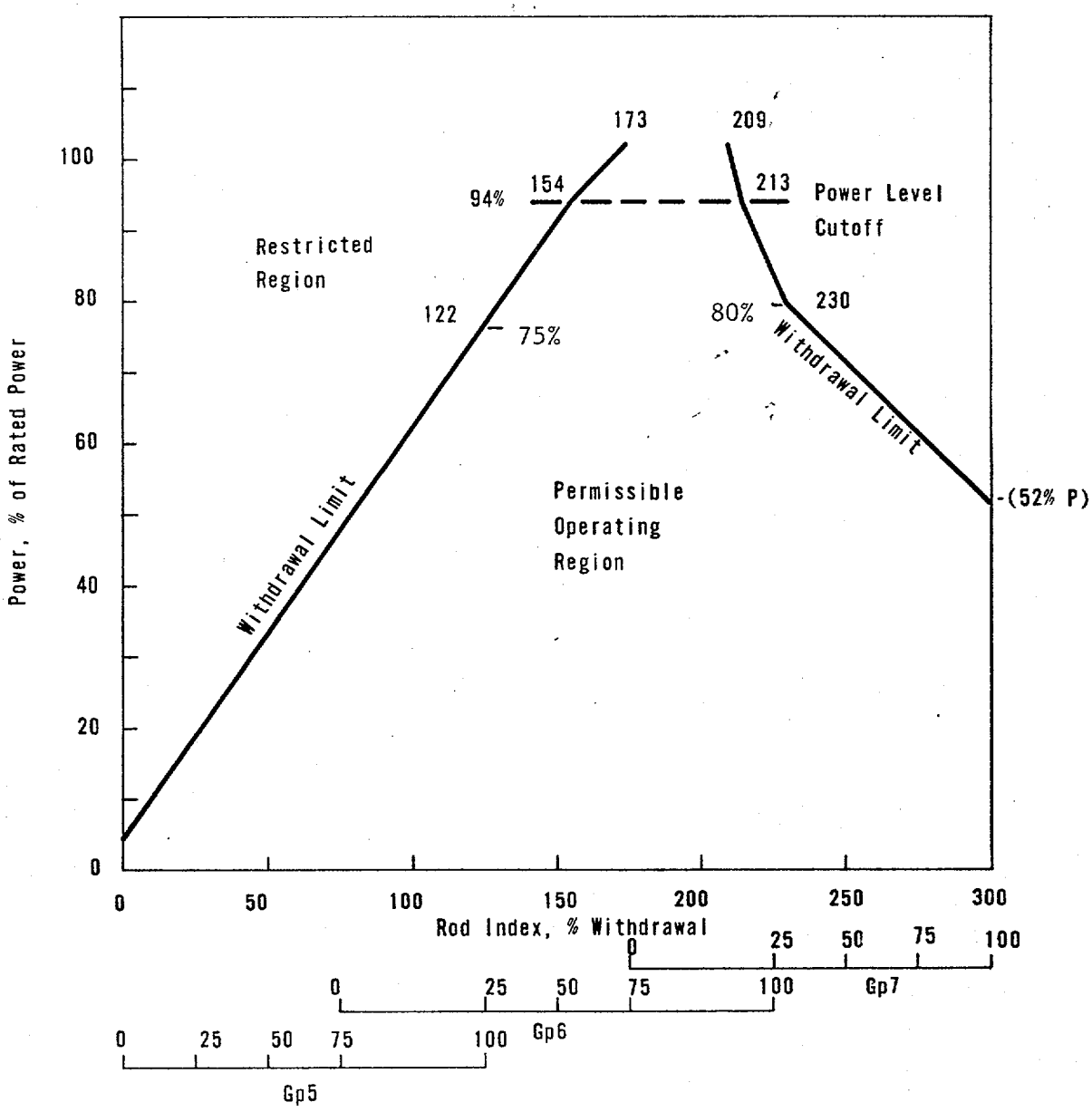

CONTROL ROD GROUP WITHDRAWAL LIMITS FOR
4 PUMP OPERATION

UNIT 1

OCONEE NUCLEAR STATION

Figure 3.5.2-1A1 | 16/11/3

NOV 26 1974

BLANK PAGE

NOV 26 1974

1. Rod index is the percentage sum of the withdrawal of the operating groups. (The applicable power level cutoff is 100% power)

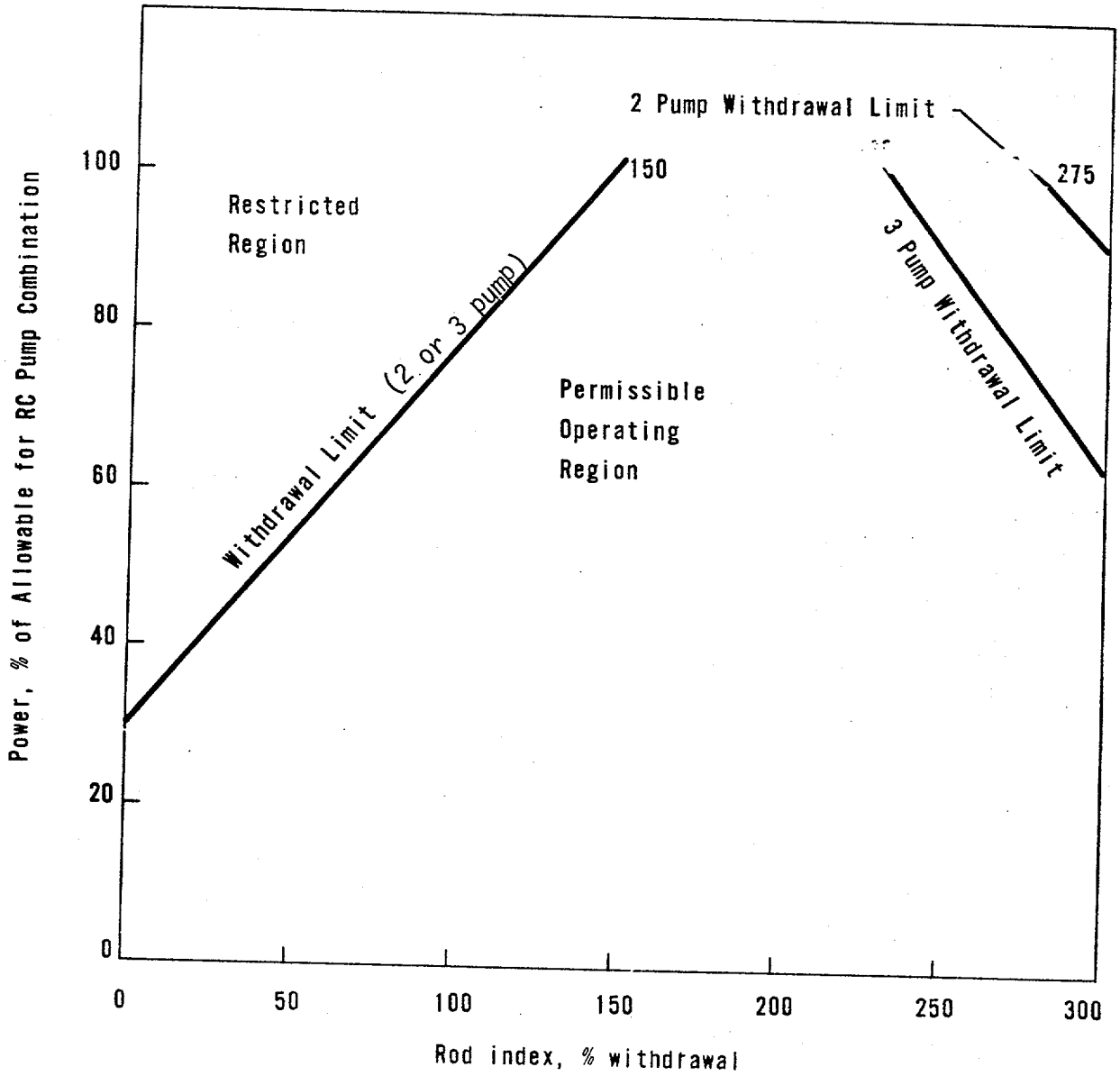

CONTROL ROD GROUP WITHDRAWAL LIMITS FOR
3 AND 2 PUMP OPERATION

UNIT 1

OCONEE NUCLEAR STATION

Figure 3.5.2-2A | 16/11/3

NOV 26 1974

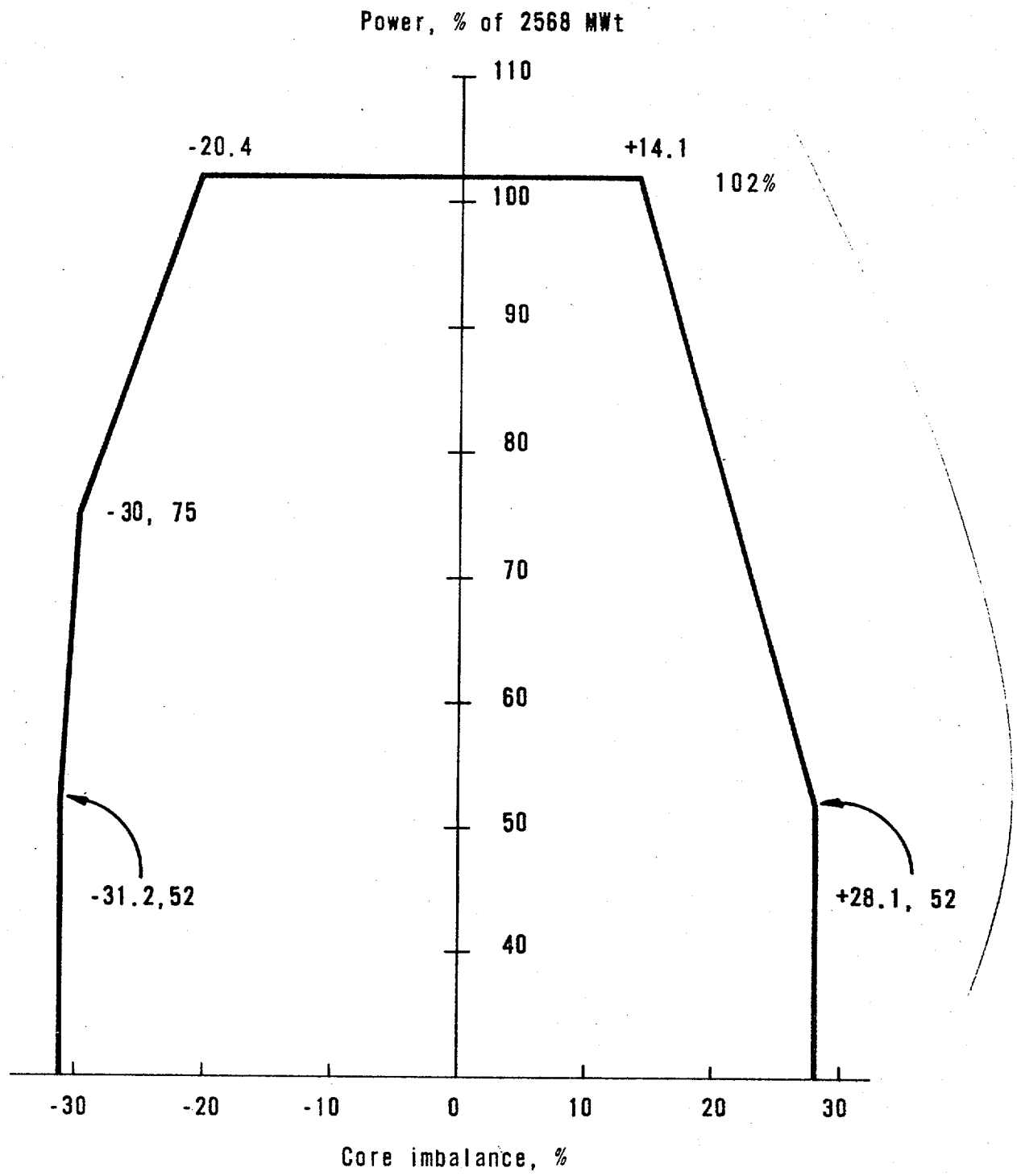

OPERATIONAL POWER IMBALANCE ENVELOPE

UNIT 1

OCONEE NUCLEAR STATION

Figure 3.5.2-3A | 16/11/

NOV 26 1974

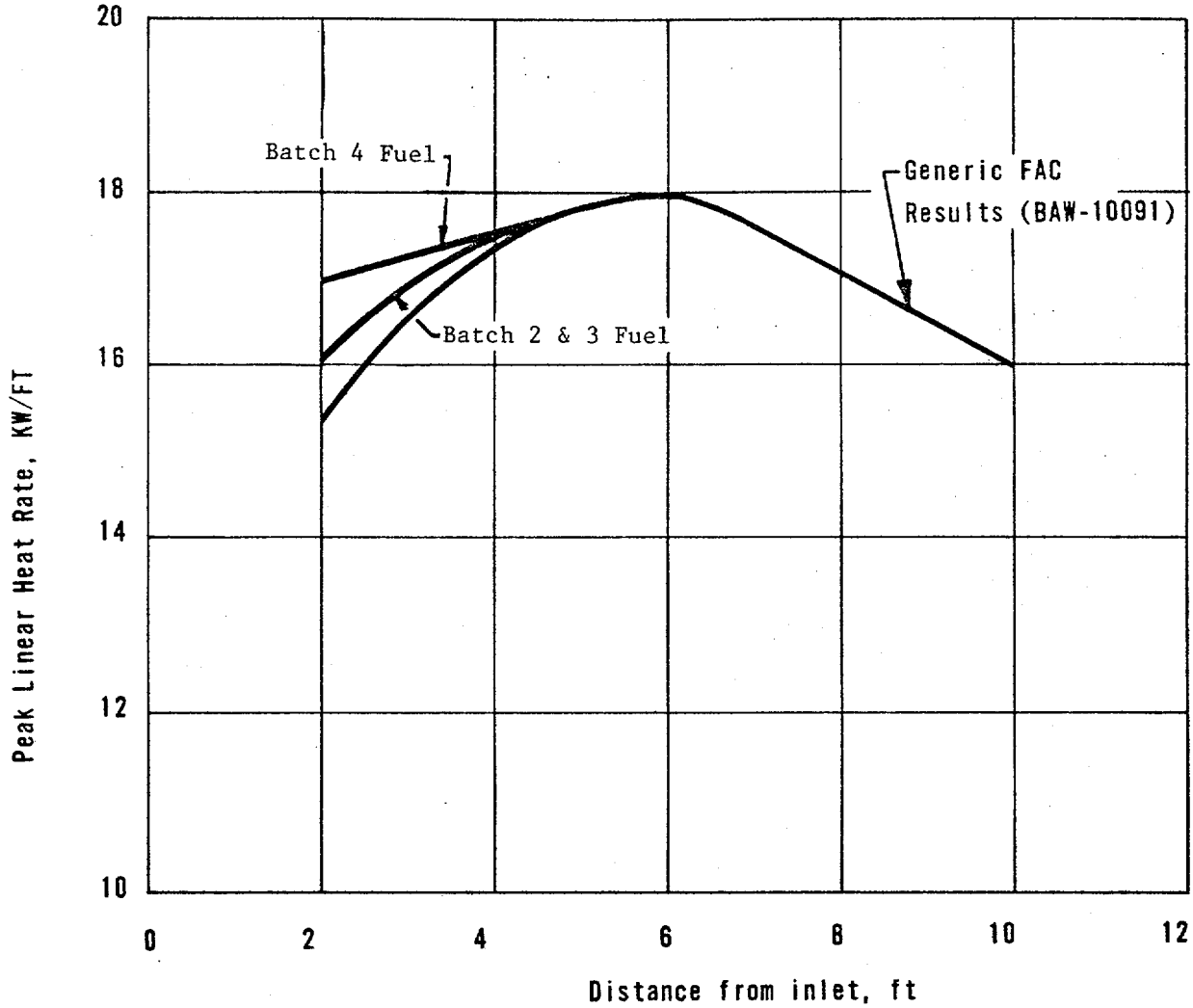

LOCA LIMITED MAXIMUM ALLOWABLE LINEAR HEAT RATE

OCONEE NUCLEAR STATION

Figure 3.5.2-4 16/11/3

NOV 26 1974

3.11 MAXIMUM POWER RESTRICTION

Applicability

Applies to the nuclear steam supply system of Units 2 and 3 reactors.

Objective

To maintain core life margin in reserve until the system has performed under operating conditions and design objectives for a significant period of time.

Specification

16/11/3

3.11.1 The first reactor core in Unit 2 may not be operated beyond 11,040 effective full power hours until supporting analysis and data pertinent to fuel clad collapse under fuel densification conditions have been approved by the Directorate of Licensing.

3.11.2 The first reactor core in Unit 3 may not be operated beyond 10,944 effective full power hours until supporting analysis and data pertinent to fuel clad collapse under fuel densification conditions have been approved by the Directorate of Licensing.

Bases

The licensing staff has reviewed the effects of fuel densification for the first core in Oconee Units 2 and 3 and concluded that clad collapse will not take place within the first fuel cycle (11,040 effective full power hours for Unit 3 and 10,944 effective full power hours for Unit 3). However, the clad collapse model used is questionable for extrapolation of clad collapse time out beyond the first fuel cycle because of limited experimental verification. 16/11/3

NOV 26 1974

3.5.2 Control Rod Group and Power Distribution Limits

Applicability

This specification applies to power distribution and operation of control rods during power operation.

Objective

To assure an acceptable core power distribution during power operation, to set a limit on potential reactivity insertion from a hypothetical control rod ejection, and to assure core subcriticality after a reactor trip.

Specification

3.5.2.1 The available shutdown margin shall be not less than 1% $\Delta k/k$ with the highest worth control rod fully withdrawn.

3.5.2.2 Operation with inoperable rods:

a. If a control rod is misaligned with its group average by more than an indicated nine (9) inches, the rod shall be declared inoperable. The rod with the greatest misalignment shall be evaluated first. The position of a rod declared inoperable due to misalignment shall not be included in computing the average position of the group for determining the operability of rods with lesser misalignments.

b. If a control rod cannot be exercised, or if it cannot be located with absolute or relative position indications or in or out limit lights, the rod shall be declared to be inoperable.

c. If a control rod cannot meet the requirements of Specification 4.7.1, the rod shall be declared inoperable.

d. If a control rod is found to be improperly programmed per Specification 4.7.2, the rod shall be declared inoperable until properly programmed.

e. Operation with more than one inoperable rod in the safety or regulating rod groups shall not be permitted.

f. If a control rod in the regulating or safety rod groups is declared inoperable in the withdrawn position, an evaluation shall be initiated immediately to verify the existance of 1% $\Delta k/k$ hot shutdown margin. Boration may be initiated either to the worth of the inoperable rod or until the regulating and transient rod groups are fully withdrawn, whichever occurs first. Simultaneously, a program of exercising the remaining regulating and safety rods shall be initiated to verify operability.

NOV 26 1974

g. If within one (1) hour of determination of an inoperable rod, it is not determined that a 1%Δk/k hot shutdown margin exists combining the worth of the inoperable rod with each of the other rods, the reactor shall be brought to the hot standby condition until this margin is established.

h. Following the determination of an inoperable rod, all rods shall be exercised within 24 hours and exercised weekly until the rod problem is solved.

i. If a control rod in the regulating or safety rod groups is declared inoperable, power shall be reduced to 60 percent of the thermal power allowable for the reactor coolant pump combination.

j. If a control rod in the regulating or axial power shaping groups is declared inoperable, operation above 60 percent of rated power may continue provided the rods in the group are positioned such that the rod that was declared inoperable is maintained within allowable group average position limits of Specification 3.5.2.2.a and the withdrawal limits of Specification 3.5.2.5.c.

3.5.2.3 The worth of a single inserted control rod shall not exceed 0.5% Δk/k at rated power or 1.0% Δk/k at hot zero power except for physics testing when the requirements of Specification 3.1.9 shall apply.

3.5.2.4 Quadrant Power Tilt

a. Whenever the quadrant power tilt exceeds 4 percent, except for physics tests, the quadrant tilt shall be reduced to less than 4 percent within two hours or the following actions shall be taken:

(1) If four reactor coolant pumps are in operation, the allowable thermal power shall be reduced by 2 percent of full power for each 1 percent tilt in excess of 4 percent below the power level cutoff (see Figures 3.5.2-1A1, 3.5.3-1B1, 3.5.2-1B2, 3.5.2-1B3, 3.5.2-1C1, 3.5.2-1C2, and 3.5.2-1C3). 16/11/3

(2) If less than four reactor coolant pumps are in operation, the allowable thermal power shall be reduced by 2 percent of full power for each 1 percent tilt below the power allowable for the reactor coolant pump combination as defined by Specification 2.3.

(3) Except as provided in 3.5.2.4.b, the reactor shall be brought to the hot shutdown condition within four hours if the quadrant tilt is not reduced to less than 4 percent after 24 hours.

b. If the quadrant tilt exceeds 4 percent and there is simultaneous indication of a misaligned control rod per Specification 3.5.2.2, reactor operation may continue provided power is reduced to 60 percent of the thermal power allowable for the reactor coolant

pump combination.

c. Except for physics tests, if quadrant tilt exceeds 9 percent, a controlled shutdown shall be initiated immediately and the reactor shall be brought to the hot shutdown condition within four hours.

d. Whenever the reactor is brought to hot shutdown pursuant to 3.5.2.4.a(3) or 3.5.2.4.c above, subsequent reactor operation is permitted for the purpose of measurement, testing, and corrective action provided the thermal power and the power range high flux setpoint allowable for the reactor coolant pump combination are restricted by a reduction of 2 percent of full power for each 1 percent tilt for the maximum tilt observed prior to shutdown.

e. Quadrant power tilt shall be monitored on a minimum frequency of once every two hours during power operation above 15 percent of rated power.

3.5.2.5 Control Rod Positions

a. Technical Specification 3.1.3.5 (safety rod withdrawal) does not prohibit the exercising of individual safety rods as required by Table 4.1-2 or apply to inoperable safety rod limits in Technical Specification 3.5.2.2.

b. Operating rod group overlap shall be 25% ± 5% between two sequential groups, except for physics tests.

c. Except for physics tests or exercising control rods, the control rod withdrawal limits are specified on Figures 3.5.2-1A1 (Unit 1), 3.5.2-1B1, 3.5.2-1B2 and 3.5.2-1B3 (Unit 2), and 3.5.2-1C1, 3.5.2-1C2, and 3.5.2-1C3 (Unit 3) for four pump operation and on Figures 3.5.2-2A (Unit 1), 3.5.2-2B (Unit 2), and 3.5.2-2C (Unit 3) for three or two pump operation. If the control rod position limits are exceeded, corrective measures shall be taken immediately to achieve an acceptable control rod position. Acceptable control rod positions shall then be attained within two hours. 16/11/

d. Except for physics tests, power shall not be increased above the power level cutoff as shown on Figure 3.5.2-1A1 (Unit 1), 3.5.2-1B1, 3.5.2-1B2, and 3.5.2-1B3 (Unit 2), and 3.5.2-1C1, 3.5.2-1C2, and 3.5.2-1C3 (Unit 3), unless the following requirements are met. 16/11/

(1) The xenon reactivity shall be within 10 percent of the value for operation at steady-state rated power.

(2) The xenon reactivity shall be asymptotically approaching the value for operation at steady-state rated power.

NOV 26 1974

3.5.2.6 Reactor power imbalance shall be monitored on a frequency not to exceed two hours during power operation above 40 percent rated power. Except for physics tests, imbalance shall be maintained within the envelope defined by Figures 3.5.2-3A, 3.5.2-3B, and 3.5.2-3C. If the imbalance is not within the envelope defined by Figure 3.5.2-3A, 3.5.2-3B, and 3.5.2-3C, corrective measures shall be taken to achieve an acceptable imbalance. If an acceptable imbalance is not achieved within two hours, reactor power shall be reduced until imbalance limits are met. 16/11/3

3.5.2.7 The control rod drive patch panels shall be locked at all times with limited access to be authorized by the superintendent.

16/11/3

NOV 26 1974

Bases

The power-imbalance envelope defined in Figures 3.5.2-3A, 3.5.2-3B, and 3.5.2-3C is based on LOCA analyses which have defined the maximum linear heat rate (see Figure 3.5.2-4) such that the maximum clad temperature will not exceed the Final Acceptance Criteria. Corrective measures will be taken immediately should the indicated quadrant tilt, rod position, or imbalance be outside their specified boundary. Operation in a situation that would cause the Final acceptance criteria to be approached should a LOCA occur is highly improbable because all of the power distribution parameters (quadrant tilt, rod position, and imbalance) must be at their limits while simultaneously all other engineering and uncertainty factors are also at their limits.** Conservatism is introduced by application of:

a. Nuclear uncertainty factors
b. Thermal calibration
c. Fuel densification effects
d. Hot rod manufacturing tolerance factors

The 25% ± 5% overlap between successive control rod groups is allowed since the worth of a rod is lower at the upper and lower part of the stroke. Control rods are arranged in groups or banks defined as follows:

Group	Function
1	Safety
2	Safety
3	Safety
4	Safety
5	Regulating
6	Regulating
7	Xenon transient override
8	APSR (axial power shaping bank)

The minimum available rod worth provides for achieving hot shutdown by reactor trip at any time assuming the highest worth control rod remains in the full out position.(1)

Inserted rod groups during power operation will not contain single rod worths greater than0.5% Δk/k. This value has been shown to be safe by the safety analysis of the hypothetical rod ejection accident.(2) A single inserted control rod worth of 1.0% Δk/k at beginning of life, hot, zero power would result in the same transient peak thermal power and, therefore, the same environmental consequences as a 0.5% Δk/k ejected rod worth at rated power.

Control rod groups are withdrawn in sequence beginning with Group 1. Groups 5, 6, and 7 are overlapped 25 percent. The normal position at power is for Groups 6 and 7 to be partially inserted.

**Actual operating limits depend on whether or not incore or excore detectors are used and their respective instrument and calibration errors. The method used to define the operating limits is defined in plant operating procedures.

NOV 26 1974

The quadrant power tilt limits set forth in Specification 3.5.2.4 have been established within the thermal analysis design base using the definition of quadrant power tilt given in Technical Specifications, Section 1.6. These limits in conjunction with the control rod position limits in Specification 3.5.2.5c ensure that design peak heat rate criteria are not exceeded during normal operation when including the effects of potential fuel densification.

The quadrant tilt and axial imbalance monitoring in Specifications 3.5.2.4 and 3.5.2.6, respectively, normally will be performed in the process computer. The two-hour frequency for monitoring these quantities will provide adequate surveillance when the computer is out of service.

Allowance is provided for withdrawal limits and reactor power imbalance limits to be exceeded for a period of two hours without specification violation. Acceptance rod positions and imbalance must be achieved within the two-hour time period or appropriate action such as a reduction of power taken.

16/11/3

Operating restrictions are included in Technical Specification 3.5.2.5d to prevent excessive power peaking by transient xenon. The xenon reactivity must be beyond the "undershoot" region and asymptotically approaching its equilibrium value at rated power.

REFERENCES

[1]Section 3.2.2.1.2

[2]Section 14.2.2.2

NOV 26 1974

DUKE POWER COMPANY

DOCKET NO. 50-287

OCONEE NUCLEAR STATION, UNIT 3

AMENDMENT TO FACILITY OPERATING LICENSE

Amendment No. 3
License No. DPR-55

1. The Atomic Energy Commission (the Commission) having found that:

   A. The application for amendment by Duke Power Company (the licensee) dated September 20, 1974, as supplemented October 8 and 31, 1974, complies with the standards and requirements of the Atomic Energy Act of 1954, as amended, and the Commission's rules and regulations set forth in 10 CFR Chapter I;

   B. The facility will operate in conformity with the application, the provisions of the Act, and the rules and regulations of the Commission;

   C. There is reasonable assurance (i) that the activities authorized by this amendment can be conducted without endangering the health and safety of the public, and (ii) that such activities will be conducted in compliance with the Commission's regulations;

   D. The issuance of this amendment will not be inimical to the common defense and security or to the health and safety of the public; and

   E. Prior public notice of this amendment is not required since the amendment does not involve a significant hazards consideration.

2. Accordingly, the license is amended by a change to the Technical Specifications as indicated in the attachment to this license amendment and Paragraph 3.Boof Facility License No. DPR-55 is hereby amended to read as follows:

OFFICE ➤						
SURNAME ➤						
DATE ➤						

"B. Technical Specifications

The Technical Specifications contained in Appendices A and B, as revised, are hereby incorporated in the license. The licensee shall operate the facility in accordance with the Technical Specifications, as revised by issued changes thereto through Change No. 3."

3. This license amendment is effective as of the date of its issuance.

FOR THE ATOMIC ENERGY COMMISSION

Original Signed by
Karl Goller

Karl R. Goller, Assistant Director
for Operating Reactors
Directorate of Licensing

Attachment:
Change No. 3 to Technical
Specifications

Date of Issuance: NOV 26 1974

OFFICE ➤						
SURNAME ➤						
DATE ➤						

ATTACHMENT TO LICENSE AMENDMENTS

AMENDMENT NO. 6 TO FACILITY LICENSE NO. DPR-38,
CHANGE NO. 16 TO TECHNICAL SPECIFICATIONS;

AMENDMENT NO. 6 TO FACILITY LICENSE NO. DPR-47,
CHANGE NO. 11 TO TECHNICAL SPECIFICATIONS;

AMENDMENT NO. 3 TO FACILITY LICENSE NO. DPR-55,
CHANGE NO. 3 TO TECHNICAL SPECIFICATIONS;

DUKE POWER COMPANY

OCONEE NUCLEAR STATION, UNITS 1, 2, AND 3

DOCKET NOS. 50-269, 50-270, AND 50-287

Revise Appendix A as follows:

Remove Pages	Insert New Pages
2.1-1 & 2.1-2	2.1-1 & 2.1-2
2.1-3	2.1-3, 2.1-3a, 2.1-3b & 2.1-4
2.1-4	2.1-4a
2.1-7	2.1-7
2.1-10	2.1-10
2.3-1 & 2.3-2	2.3-1 & 2.3-2
2.3-3 & 2.3-4	2.3-3 & 2.3-4
2.3-5	2.3-5
2.3-8	2.3-8 & 2.3-8a
2.3-11	2.3-11
3.5-12	3.5-12
3.5-13	3.5-13 Blank page
3.5-18	3.5-18
3.5-21	3.5-21

Remove Pages	Insert New Pages
3.5-24	3.5-24
3.11-1	3.11-1
3.5-6 & 3.5-7	3.5-6 & 3.5-7
3.5-8 & 3.5-9	3.5-8 & 3.5-9
3.5-10 & 3.5-11	3.5-10 & 3.5-11

2 SAFETY LIMITS AND LIMITING SAFETY SYSTEM SETTINGS

2.1 SAFETY LIMITS, REACTOR CORE

Applicability

Applies to reactor thermal power, reactor power imbalance, reactor coolant system pressure, coolant temperature, and coolant flow during power operation of the plant.

Objective

To maintain the integrity of the fuel cladding.

Specification

The combination of the reactor system pressure and coolant temperature shall not exceed the safety limit as defined by the locus of points established in Figure 2.1-1A-Unit 1. If the actual pressure/temperature point is below
2.1-1B-Unit 2
2.1-1C-Unit 3
and to the right of the line, the safety limit is exceeded.

The combination of reactor thermal power and reactor power imbalance (power in the top half of the core minus the power in the bottom half of the core expressed as a percentage of the rated power) shall not exceed the safety limit as defined by the locus of points (solid line) for the specified flow set forth in Figure 2.1-2A-Unit 1. If the actual reactor-thermal-power/power
2.1-2B-Unit 2
2.1-2C-Unit 3
imbalance point is above the line for the specified flow, the safety limit is exceeded.

Bases - Unit 1

The safety limits presented for Oconee Unit 1 have been generated using BAW-2 critical heat flux (CHF) correlation[1] and the actual measured flow rate at Oconee Unit 1 (2). This development is discussed in the Oconee 1, Cycle 2-Reload Report, reference (2). The flow rate utilized is 107.6 percent of the design flow (131.32 x 10^6 lbs/hr) based on four-pump operation.(2)

To maintain the integrity of the fuel cladding and to prevent fission product release, it is necessary to prevent overheating of the cladding under normal operating conditions. This is accomplished by operating within the nucleate boiling regime of heat transfer, wherein the heat transfer coefficient is large enough so that the clad surface temperature is only slightly greater than the coolant temperature. The upper boundary of the nucleate boiling regime is termed "departure from nucleate boiling" (DNB). At this point, there is a sharp reduction of the heat transfer coefficient, which would result in high cladding temperatures and the possibility of cladding failure. Although DNB is not an observable parameter during reactor operation, the observable parameters of neutron power, reactor coolant flow, temperature, and pressure

16/11/3

NOV 26 1974

can be related to DNB through the use of the BAW-2 correlation (1). The BAW-2 correlation has been developed to predict DNB and the location of DNB for axially uniform and non-uniform heat flux distributions. The local DNB ratio (DNBR), defined as the ratio of the heat flux that would cause DNB at a particular core location to the actual heat flux, is indicative of the margin to DNB. The minimum value of the DNBR, during steady-state operation, normal operational transients, and anticipated transients is limited to 1.32. A DNBR of 1.32 corresponds to a 95 percent probability at a 99 percent confidence level that DNB will not occur; this is considered a conservative margin to DNB for all operating conditions. The difference between the actual core outlet pressure and the indicated reactor coolant system pressure has been considered in determining the core protection safety limits. The difference in these two pressures is nominally 45 psi; however, only a 30 psi drop was assumed in reducing the pressure trip setponts to correspond to the elevated location where the pressure is actually measured.

The curve presented in Figure 2.1-1A represents the conditions at which a minimum DNBR of 1.32 is predicted for the maximum possible thermal power (112 percent) when four reactor coolant pumps are operating (minimum reactor coolant flow is 107.6 percent of 131.3 x 10^6 lbs/hr.). This curve is based on the combination of nuclear power peaking factors, with potential fuel densification effects, which result in a more conservative DNBR than any other shape that exists during normal operation.

The curves of Figure 2.1-2A are based on the more restrictive of two thermal limits and include the effects of potential fuel densification:

1. The 1.32 DNBR limit produced by the combination of the radial peak, axial peak and position of the axial peak that yields no less than a 1.32 DNBR.

2. The combination of radial and axial peak that causes central fuel melting at the hot spot. The limit is 20.15 kw/ft for Unit 1.

Power peaking is not a directly observable quantity and therefore limits have been established on the bases of the reactor power imbalance produced by the power peaking.

The specified flow rates for Curves 1, 2, 3 and 4 of Figure 2.1-2A correspond to the expected minimum flow rates with four pumps, three pumps, one pump in each loop and two pumps in one loop, respectively.

The curve of Figure 2.1-1A is the most restrictive of all possible reactor coolant pump-maximum thermal power combinations shown in Figure 2.1-3A (because the four-pump pressure - temperature restriction is known to be more limiting than the 3 and 2 pump combinations, only the four pump limit has been shown on Figure 2.1-3A).

The maximum thermal power for three-pump operation is 87 percent due to a power level trip produced by the flux-flow ratio 75 percent flow x 1.08 = 81 percent power, plus the maximum calibration and instrument error. The maximum thermal power for other coolant pump conditions are produced in a similar manner.

16/11/3

NOV 26 1974

For Figure 2.1-3A, a pressure-temperature point above and to the left of the curve would result in a DNBR greater than 1.32. The 1.32 DNBR curve for four-pump operation is more restrictive than any other reactor coolant pump situation because any pressure/temperature point above and to the left of the four pump curve will be above and to the left of the other curves.

16/11/

References

(1) Correlation of Critical Heat Flux in a Bundle Cooled by Pressurized Water, BAW-10000, March, 1970.

(2) Oconee 1, Cycle 2 - Reload Report - BAW-1409, Sepetmeber, 1974.

NOV 26 1974

Bases - Units 2 and 3

To maintain the integrity of the fuel cladding and to prevent fission product release, it is necessary to prevent overheating of the cladding under normal operating conditions. This is accomplished by operating within the nucleate boiling regime of heat transfer, wherein the heat transfer coefficient is large enough so that the clad surface temperature is only slightly greater than the coolant temperature. The upper boundary of the nucleate boiling regime is termed "departure from nucleate boiling" (DNB). At this point, there is a sharp reduction of the heat transfer coefficient, which would result in high cladding temperatures and the possibility of cladding failure. Although DNB is not an observable parameter during reactor operation, the observable parameters of neutron power, reactor coolant flow, temperature, and pressure can be related to DNB through the use of the W-3 correlation.(1) The W-3 correlation has been developed to predict DNB and the location of DNB for axially uniform and non-uniform heat flux distributions. The local DNB ratio (DNBR), defined as the ratio of the heat flux that would cause DNB at a particular core location to the actual heat flux, is indicative of the margin to DNB. The minimum value of the DNBR, during steady-state operation, normal operational transients, and anticipated transients is limited to 1.3. A DNBR of 1.3 corresponds to a 94.3 percent probability at a 99 percent confidence level that DNB will not occur; this is considered a conservative margin to DNB for all operating conditions. The difference between the actual core outlet pressure and the indicated reactor coolant system pressure has been considered in determining the core protection safety limits. The difference in these two pressures is nominally 45 psi; however, only a 30 psi drop was assumed in reducing the pressure trip setpoints to correspond to the elevated location where the pressure is actually measured.

The curve presented in Figure 2.1-1B represents the conditions at which a 16/1
2.1-1C 3
minimum DNBR of 1.3 is predicted for the maximum possible thermal power (112%) when four reactor coolant pumps are operating (minimum reactor coolant flow is 131.3 x 10^6 lbs/hr). This curve is based on the following nuclear power peaking factors(2) with potential fuel densification effects:

$$F_q^N = 2.67;\ F_{\Delta H}^N = 1.78;\ F_z^N = 1.50$$

The design peaking combination results in a more conservative DNBR than any other shape that exists during normal operation.

The curves of Figure 2.1-2B are based on the more restrictive of two thermal 16/11/
2.1-2C 3
limits and include the effects of potential fuel densification:

1. The 1.3 DNBR limit produced by a nuclear power peaking factor of $F_q^N = 2.67$ or the combination of the radial peak, axial peak and position of the axial peak that yields no less than 1.3 DNBR.

2. The combination of radial and axial peak that causes central fuel melting at the hot spot. The limit is 19.8 kw/ft - Unit 2 16/11/
19.8 kw/ft - Unit 3 3

NOV 26 1974

Power peaking is not a directly observable quantity and therefore limits have been established on the bases of the reactor power imbalance produced by the power peaking.

The specified flow rates for Curves 1, 2, 3, and 4 of Figure 2.1-2B correspond 16/11
2.1-2C 3
to the expected minimum flow rates with four pumps, three pumps, one pump in each loop and two pumps in one loop, respectively.

The curve of Figure 2.1-1B is the most restrictive of all possible reactor 16/11/
2.1-1C 3
coolant pump-maximum thermal power combinations shown in Figure 2.1-3B.
2.1-3C

The curves of Figure 2.1-3B represent the conditions at which a minimum DNBR 16/11/
2.1-3C 3
of 1.3 is predicted at the maximum possible thermal power for the number of reactor coolant pumps in operation or the local quality at the point of minimum DNBR is equal to 15%,(3) whichever condition is more restrictive.

Using a local quality limit of 15 percent at the point of minimum DNBR as a 16/11
basis for Curves 2 and 4 of Figure 2.1-3B is a conservative criterion even 3
2.1-3C
though the quality of the exit is higher than the quality at the point of minimum DNBR.

The DNBR as calculated by the W-3 correlation continually increases from point of minimum DNBR, so that the exit DNBR is 1.7 or higher, depending on the pressure. Extrapolation of the W-3 correlation beyond its published quality range of +15 percent is justified on the basis of experimental data.(4)

The maximum thermal power for three pump operation is 86% - Unit 2 16/11
86% - Unit 3 3
due to a power level trip produced by the flux-flow ratio 75% flow x 1.07 = 80%
1.07 = 80%
power
plus the maximum calibration and instrument error. The maximum thermal power for other coolant pump conditions are produced in a similar manner.

For each curve of Figure 2.1-3B, a pressure-temperature point above and to the 16/11
2.1-3C 3
left of the curve would result in a DNBR greater than 1.3 or a local quality at the point of minimum DNBR less than 15 percent for that particular reactor coolant pump situation. The 1.3 DNBR curve for four-pump operation is more restrictive than any other reactor coolant pump situation because any pressure/temperature point above and to the left of the four-pump curve will be above and to the left of the other curves.

REFERENCES

(1) FSAR, Section 3.2.3.1.1
(2) FSAR, Section 3.2.3.1.1.c
(3) FSAR, Section 3.2.3.1.1.k

NOV 26 1974

(4) The following papers which were presented at the Winter Annual Meeting, ASME, November 18, 1969, during the "Two-phase Flow and Heat Transfer in Rod Bundles Symposium:"

(a) Wilson, et al.
"Critical Heat Flux in Non-Uniform Heater Rod Bundles"

(b) Gellerstedt, et al.
"Correlation of a Critical Heat Flux in a Bundle Cooled by Pressurized Water"

NOV 26 1974

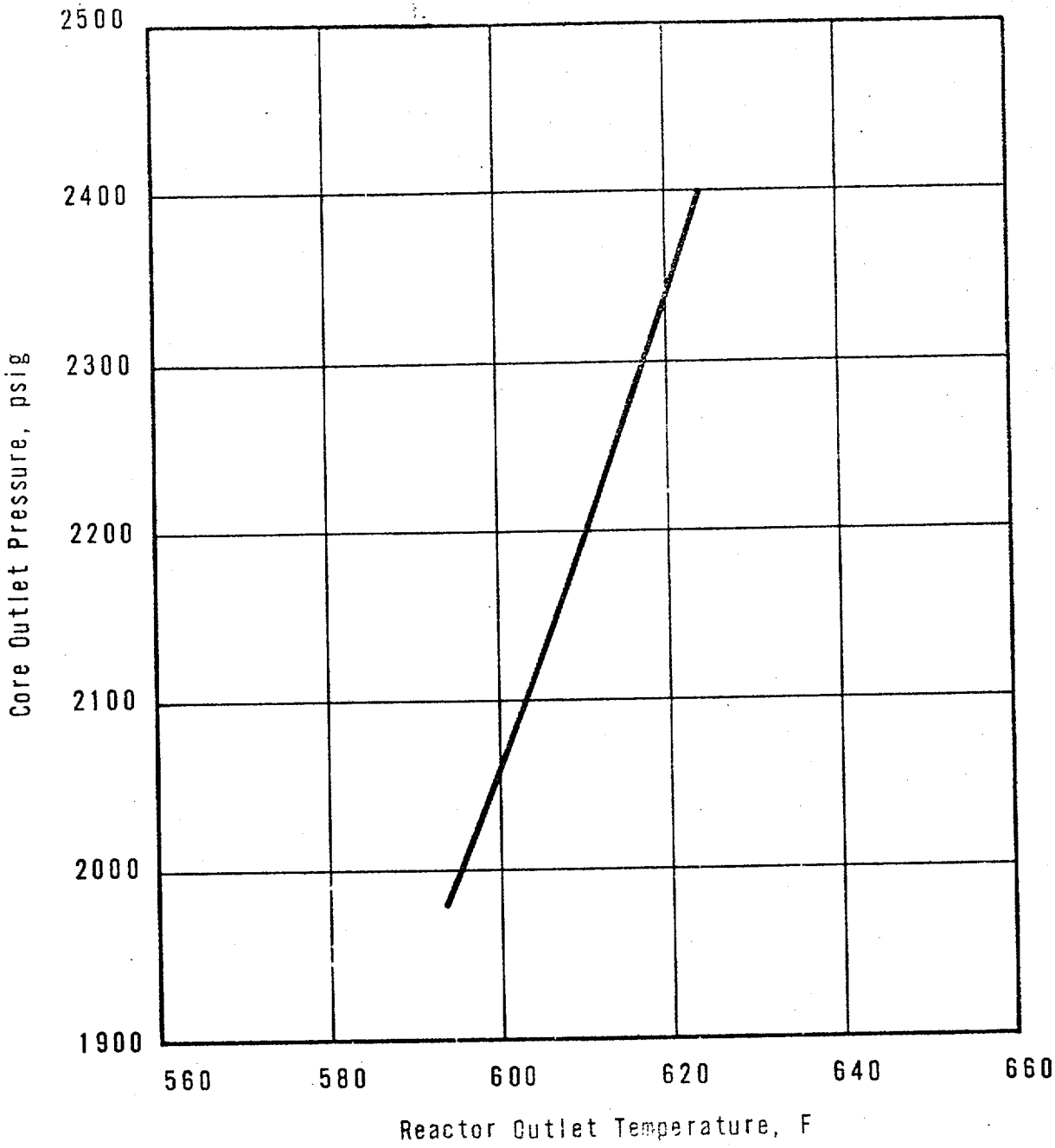

CORE PROTECTION SAFETY LIMITS

UNIT 1

OCONEE NUCLEAR STATION

Figure 2.1-1A | 16/11/3

NOV 26 1974

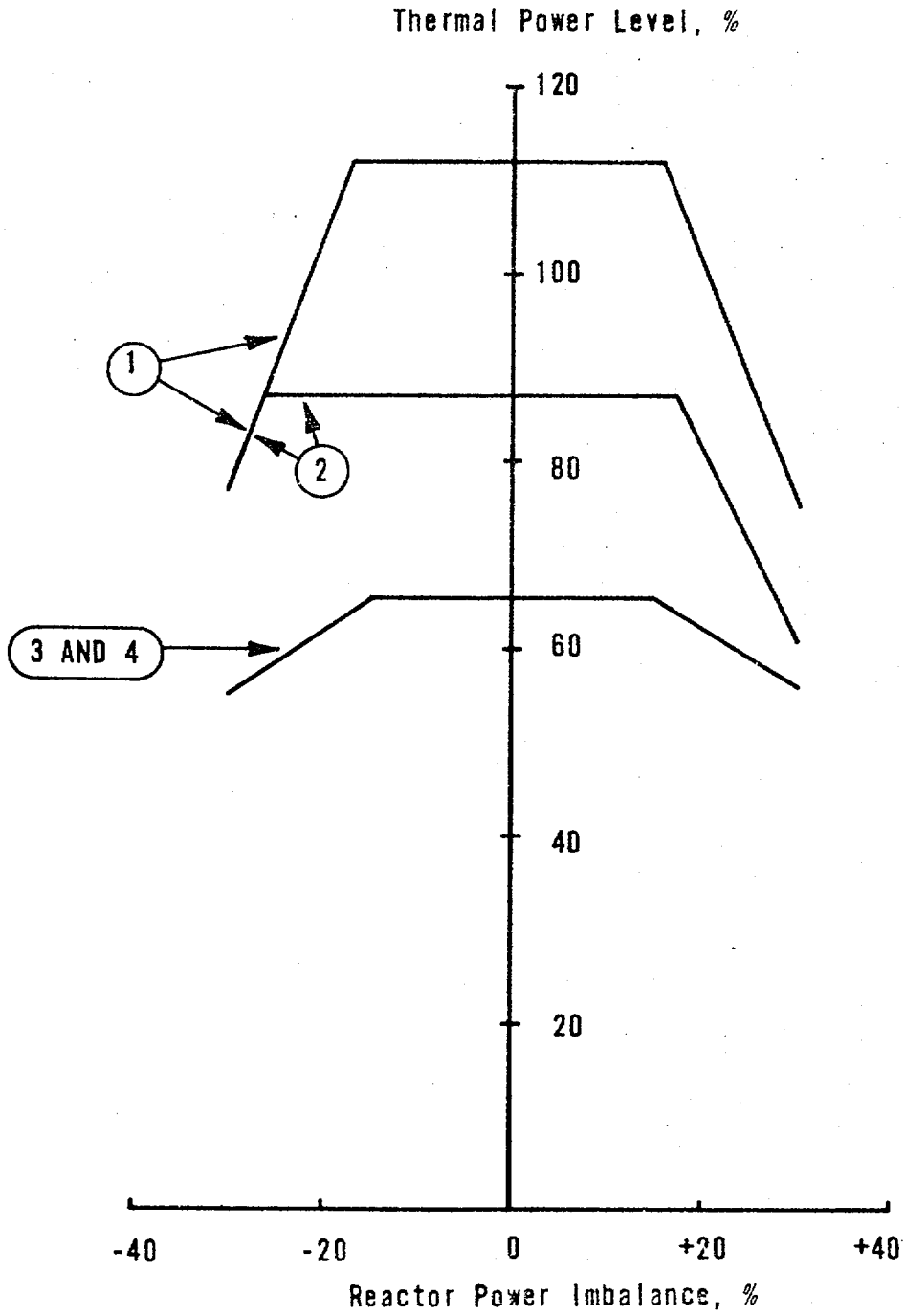

CURVE	REACTOR COOLANT FLOW (LB/HR)
1	131.3×10^6
2	98.1×10^6
3	64.4×10^6
4	60.1×10^6

CORE PROTECTION SAFETY LIMITS

UNIT 1

OCONEE NUCLEAR STATION

Figure 2.1-2A

NOV 26 1974

16/11/3

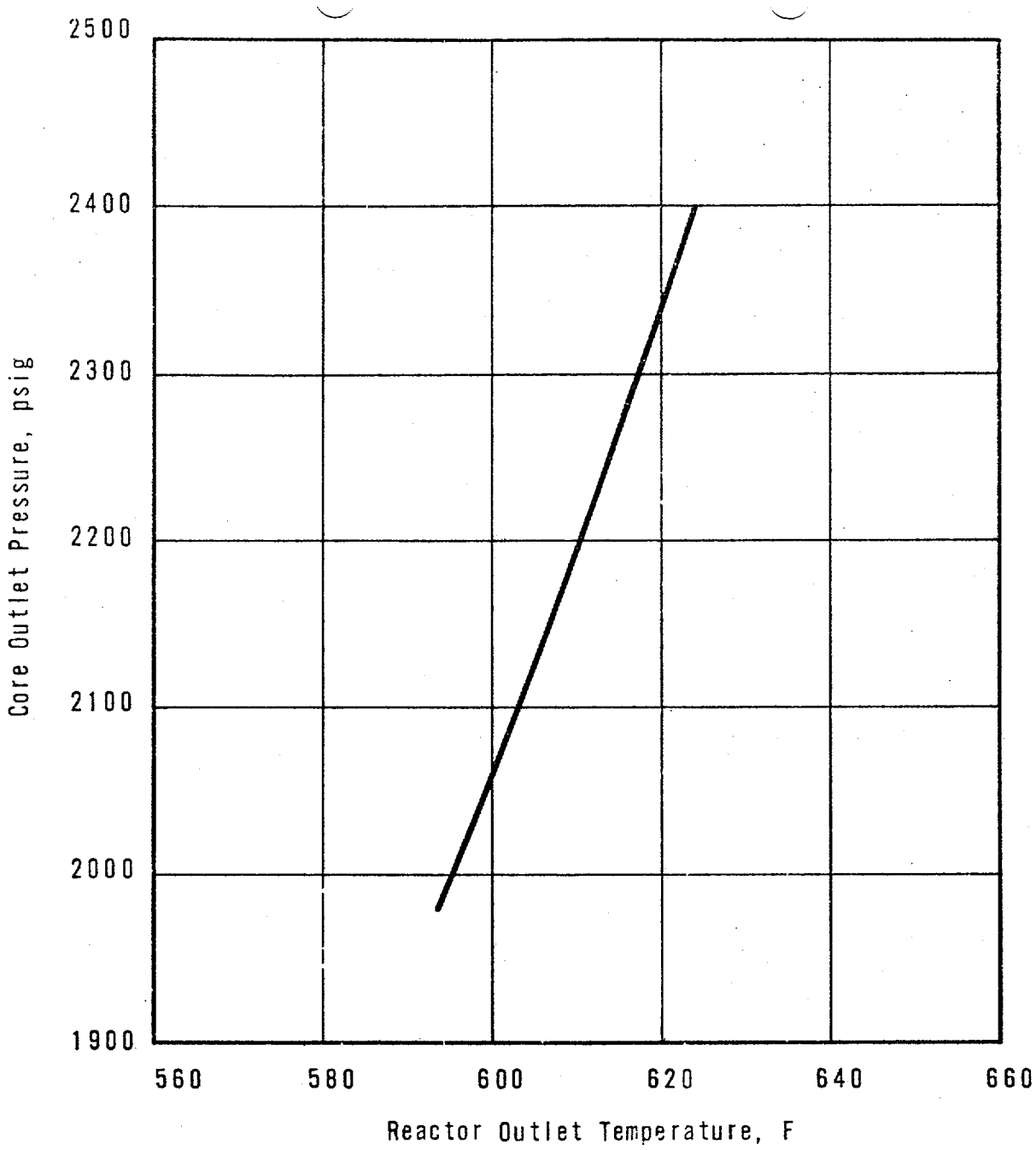

CORE PROTECTION SAFETY LIMITS

UNIT 1

OCONEE NUCLEAR STATION

Figure 2.1-3A | 16/11/3

NOV 26 1974

2.3 LIMITING SAFETY SYSTEM SETTINGS, PROTECTIVE INSTRUMENTATION

Applicability

Applies to instruments monitoring reactor power, reactor power imbalance, reactor coolant system pressure, reactor coolant outlet temperature, flow, number of pumps in operation, and high reactor building pressure.

Objective

To provide automatic protective action to prevent any combination of process variables from exceeding a safety limit.

Specification

The reactor protective system trip setting limits and the permissible bypasses for the instrument channels shall be as stated in Table 2.3-1A - Unit 1 and
2.3-1B - Unit 2
2.3-1C - Unit 3 16/11/3

Figure 2.3-2A1 } Unit 1
2.3-2A2
2.3-2B - Unit 2
2.3-2C - Unit 3

The pump monitors shall produce a reactor trip for the following conditions:

a. Loss of two pumps and reactor power level is greater than 55% (0.0% for Unit 1) of rated power. 16/11/3

b. Loss of two pumps in one reactor coolant loop and reactor power level is greater than 0.0% of rated power. (Power/RC pump trip setpoint is reset to 55% of rated power for single loop operation. Power/RC pump trip setpoint is reset to 55% for all modes of 2 pump operation for Unit 1.) 16/11/

c. Loss of one or two pumps during two-pump operation.

Bases

The reactor protective system consists of four instrument channels to monitor each of several selected plant conditions which will cause a reactor trip if any one of these conditions deviates from a pre-selected operating range to the degree that a safety limit may be reached.

The trip setting limits for protective system instrumentation are listed in Table 2.3-1A - Unit 1. The safety analysis has been based upon [illegible]
2.3-1B - Unit 2
2.3-1C - Unit 3
system instrumentation trip set points plus calibration and instrument error.

Nuclear Overpower

A reactor trip at high power level (neutron flux) is provided to [illegible] damage to the fuel cladding from reactivity excursions too rapid [illegible] by pressure and temperature measurements.

NOV 26 1974

During normal plant operation with all reactor coolant pumps operating, reactor trip is initiated when the reactor power level reaches 105.5% of rated power. Adding to this the possible variation in trip setpoints due to calibration and instrument errors, the maximum actual power at which a trip would be actuated could be 112%, which is more conservative than the value used in the safety analysis.(4)

Overpower Trip Based on Flow and Imbalance

The power level trip set point produced by the reactor coolant system flow is based on a power-to-flow ratio which has been established to accommodate the most severe thermal transient considered in the design, the loss-of-coolant flow accident from high power. Analysis has demonstrated that the specified power-to-flow ratio is adequate to prevent a DNBR of less than 1.3 should a low flow condition exist due to any electrical malfunction.

The power level trip set point produced by the power-to-flow ratio provides both high power level and low flow protection in the event the reactor power level increases or the reactor coolant flow rate decreases. The power level trip set point produced by the power-to-flow ratio provides overpower DNB protection for all modes of pump operation. For every flow rate there is a maximum permissible power level, and for every power level there is a minimum permissible low flow rate. Typical power level and low flow rate combinations for the pump situations of Table 2.3-1A are as follows:

1. Trip would occur when four reactor coolant pumps are operating if power is 108% and reactor flow rate is 100%, or flow rate is 93% and power level is 100%.

2. Trip would occur when three reactor coolant pumps are operating if power is 81.0% and reactor flow rate is 74.7% or flow rate is 69% and power level is 75%.

3. Trip would occur when two reactor coolant pumps are operating in a single loop if power is 59% and the operating loop flow rate is 54.5% or flow rate is 43% and power level is 46%.

4. Trip would occur when one reactor coolant pump is operating in each loop (total of two pumps operating) if the power is 53% and reactor flow rate is 49.0% or flow rate is 45% and the power level is 49%.

For safety calculations the maximum calibration and instrumentation errors for the power level trip were used.

The power-imbalance boundaries are established in order to prevent reactor thermal limits from being exceeded. These thermal limits are either power peaking kw/ft limits or DNBR limits. The reactor power imbalance (power in the top half of core minus power in the bottom half of core) reduces the power level trip produced by the power-to-flow ratio such that the boundaries of Figure 2.3-2A1 }Unit 1 are produced. The power-to-flow ratio reduces the power | 16/11/3
2.3-2A2 }Unit 1
2.3-2B - Unit 2
2.3-2C - Unit 3

NOV 26 1974

level trip and associated reactor power/reactor power-imbalance boundaries by
1.08% - Unit 1 for a 1% flow reduction.
1.07% - Unit 2
1.07% - Unit 3

Pump Monitors

The pump monitors prevent the minimum core DNBR from decreasing below 1.3 by tripping the reactor due to the loss of reactor coolant pump(s). The circuitry monitoring pump operational status provides redundant trip protection for DNB by tripping the reactor on a signal diverse from that of the power-to-flow ratio. The pump monitors also restrict the power level for the number of pumps in operation.

Reactor Coolant System Pressure

During a startup accident from low power or a slow rod withdrawal from high power, the system high pressure set point is reached before the nuclear overpower trip set point. The trip setting limit shown in Figure 2.3-1A - Unit 1
2.3-1B - Unit 2
2.3-1C - Unit 3
for high reactor coolant system pressure (2355 psig) has been established to maintain the system pressure below the safety limit (2750 psig) for any design transient.(1)

The low pressure (1985) psig and variable low pressure ($13.77\ T_{out} - 6181$) trip 16/11/3
(1800) psig ($16.25\ T_{out} - 7756$)
(1800) psig ($16.25\ T_{out} - 7756$)
setpoints shown in Figure 2.3-1A have been established to maintain the DNB
2.3-1B
2.3-1C
ratio greater than or equal to 1.3 for those design accidents that result in a pressure reduction.(2,3)

Due to the calibration and instrumentation errors the safety analysis used a variable low reactor coolant system pressure trip value of ($13.77\ T_{out} - 6221$) 16/11/3
($16.25\ T_{out} - 7796$)
($16.25\ T_{out} - 7796$)

Coolant Outlet Temperature

The high reactor coolant outlet temperature trip setting limit (619 F) shown in Figure 2.3-1A has been established to prevent excessive core coolant
2.3-1B
2.3-1C
temperatures in the operating range. Due to calibration and instrumentation errors, the safety analysis used a trip set point of 620°F.

Reactor Building Pressure

The high reactor building pressure trip setting limit (4 psig) provides positive assurance that a reactor trip will occur in the unlikely event of a loss-of-coolant accident, even in the absence of a low reactor coolant system pressure trip.

NOV 26 1974

Shutdown Bypass

In order to provide for control rod drive tests, zero power physics testing, and startup procedures, there is provision for bypassing certain segments of the reactor protection system. The reactor protection system segments which can be bypassed are shown in Table 2.3-1A. Two conditions are imposed when
2.3-1B
2.3-1C
the bypass is used:

1. By administrative control the nuclear overpower trip set point must be reduced to a value $\leq$ 5.0% of rated power during reactor shutdown.

2. A high reactor coolant system pressure trip setpoint of 1720 psig is automatically imposed.

The purpose of the 1720 psig high pressure trip set point is to prevent normal operation with part of the reactor protection system bypassed. This high pressure trip set point is lower than the normal low pressure trip set point so that the reactor must be tripped before the bypass is initiated. The over power trip set point of $\leq$ 5.0% prevents any significant reactor power from being produced when performing the physics tests. Sufficient natural circulation (5) would be available to remove 5.0% of rated power if none of the reactor coolant pumps were operating.

Two Pump Operation

A. Two Loop Operation

Operation with one pump in each loop will be allowed only following reactor shutdown. After shutdown has occurred, the following actions will permit operation with one pump in each loop: 16/11/3
1. Reset the pump contact monitor power level trip setpoint to 55.0%.
2. (Unit 1) Reset the protective system maximum allowable setpoint as shown in Figure 2.3-2A2.

B. Single Loop Operation

Single loop operation is permitted only after the reactor has been tripped. After the pump contact monitor trip has occurred, the following actions will permit single loop operation:
1. Reset the pump contact monitor power level trip setpoint to 55.0%.
2. Trip one of the two protective channels receiving outlet temperature information from sensors in the Idle Loop.
3. (Unit 1) Reset the protective system maximum allowable setpoints as shown in Figure 2.3-2A2. Tripping one of the two protective channels receiving outlet temperature information from the idle loop assures a protective system trip logic of one out of two. 16/11/3

(4) FSAR, Section 14.1.2.7
(5) FSAR, Section 14.1.2.6
(6) FSAR, Section 14.1.2.8
(7) FSAR, Section 14.1.2.3

NOV 26 1974

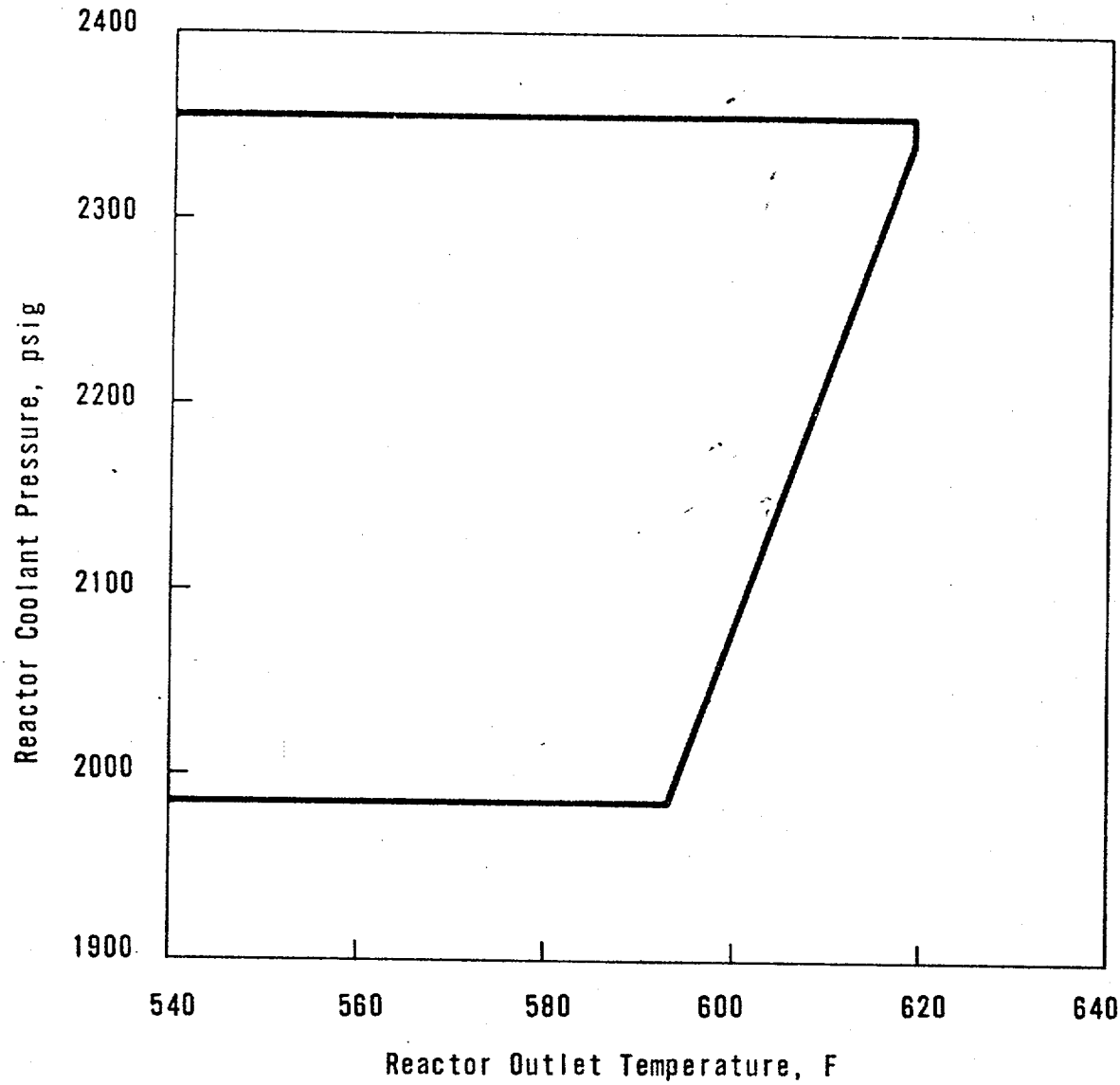

PROTECTIVE SYSTEM MAXIMUM
ALLOWABLE SET POINTS

UNIT 1

OCONEE NUCLEAR STATION
Figure 2.3-1A | 16/11/3

NOV 26 1974

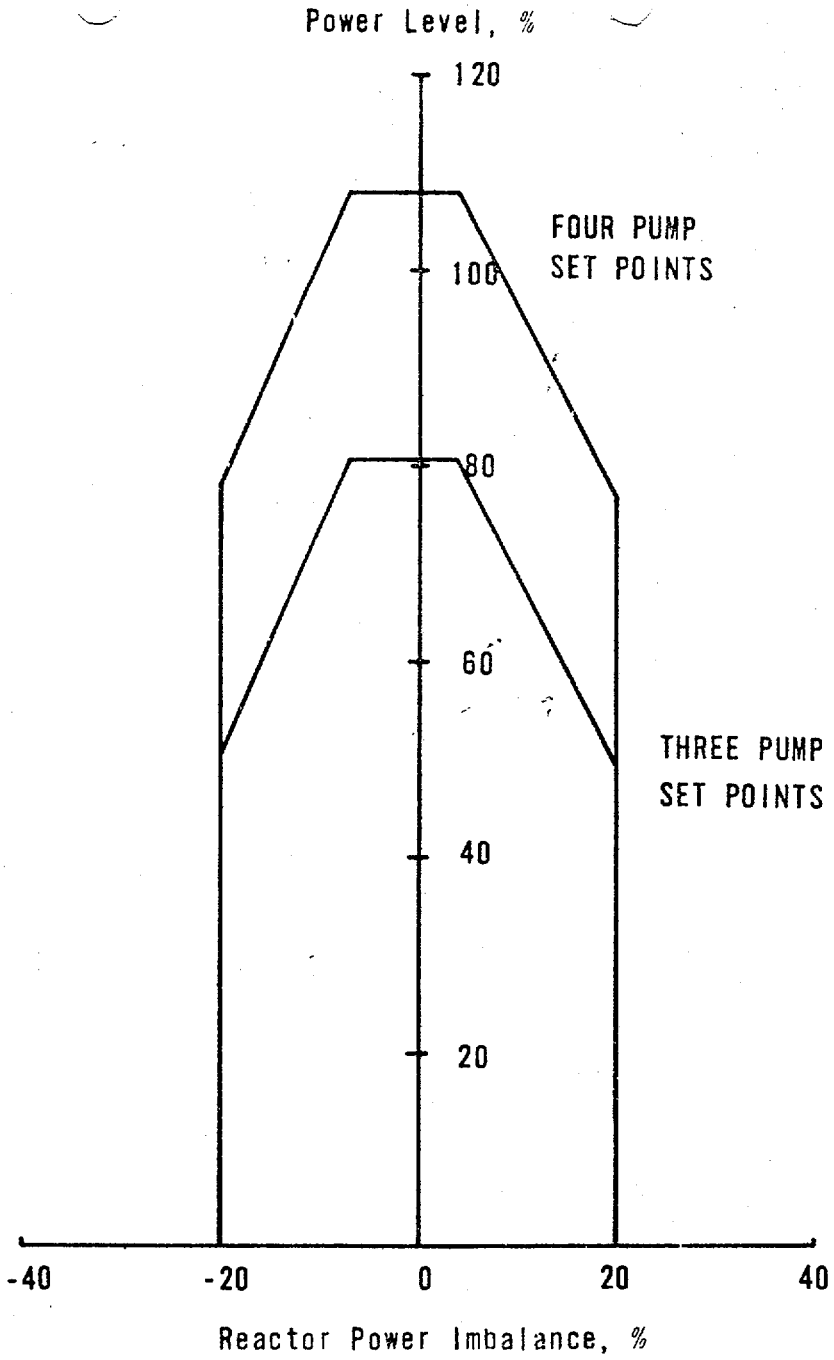

PROTECTIVE SYSTEM MAXIMUM
ALLOWABLE SET POINTS

UNIT 1

OCONEE NUCLEAR STATION

Figure 2.3-2A1 16/11/

NOV 26 1974

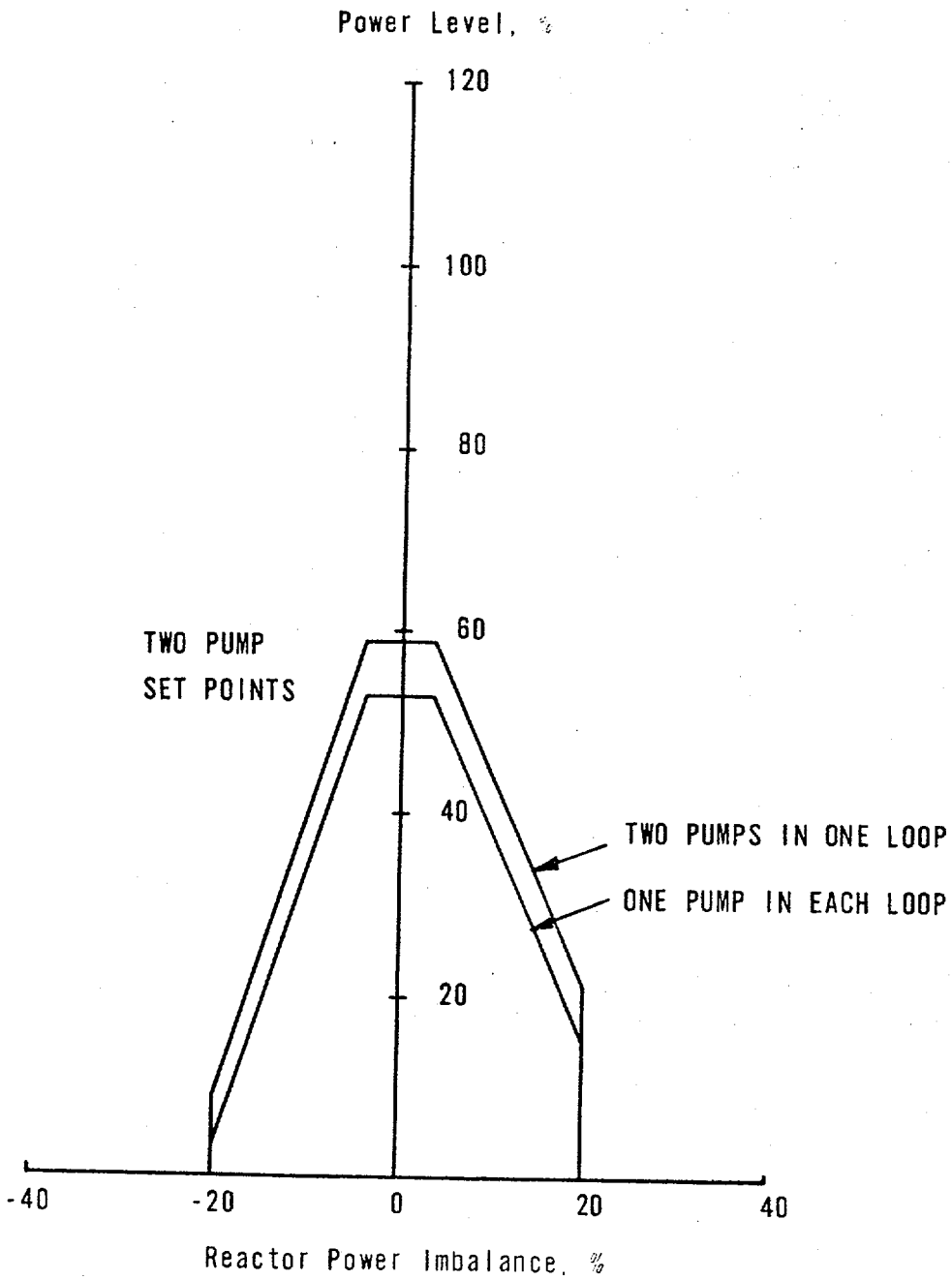

PROTECTIVE SYSTEM MAXIMUM
ALLOWABLE SET POINTS

UNIT 1

2.3-8a

OCONEE NUCLEAR STATION

Figure 2.3-2A2 | 16/11/3

NOV 26 1974

Table 2.3-1A
Unit 1

Reactor Protective System Trip Setting Limits

RPS Segment	Four Reactor Coolant Pumps Operating (Operating Power -100% Rated)	Three Reactor Coolant Pumps Operating (Operating Power -75% Rated)	Two Reactor Coolant Pumps Operating in A Single Loop (Operating Power -46% Rated)	One Reactor Coolant Pump Operating in Each Loop (Operating Power -49% Rated)	Shutdown Bypass
1. Nuclear Power Max. (% Rated)	105.5	105.5	105.5	105.5	5.0(3)
2. Nuclear Power Max. Based on Flow (2) and Imbalance, (% Rated)	1.08 times flow minus reduction due to imbalance	1.08 times flow minus reduction due to imbalance	1.08 times flow minus reduction due to imbalance	1.08 times flow minus reduction due to imbalance	Bypassed
3. Nuclear Power Max. Based on Pump Monitors, (%, Rated)	NA	NA	55% (5)(6)	55% (5)	Bypassed
4. High Reactor Coolant System Pressure, psig, Max.	2355	2355	2355	2355	1720(4)
5. Low Reactor Coolant System Pressure, psig, Min.	1985	1985	1985	1985	Bypassed
6. Variable Low Reactor Coolant System Pressure psig, Min.	$(13.77\ T_{out} - 6181)$(1)	$(13.77\ T_{out} - 6181)$(1)	$(13.77\ T_{out} - 6181)$(1)	$(13.77\ T_{out} - 6181)$(1)	Bypassed
7. Reactor Coolant Temp. F., Max.	619	619	619 (6)	619	619
8. High Reactor Building Pressure, psig, Max.	4	4	4	4	4

16/11

(1) T_{out} is in degrees Fahrenheit (^{o}F).

(2) Reactor Coolant System Flow, %.

(3) Administratively controlled reduction set only during reactor shutdown.

(4) Automatically set when other segments of the RPS are bypassed.

(5) Reactor power level trip set point produced by pump contact monitor reset to 55.0%.

(6) Specification 3.1.8 applies. Trip one of the two protection channels receiving outlet temperature information from sensors in the idle loop.

NOV 26 1974

1. Rod index is t ercentage sum of the withdrawal of tl perating groups.

2. These withdrawal limits are effective only for 250 ± 5 full power days of operation after issuance of Amendments No. 6, 6 and 3, respectively, of Licenses No. DPR-38, -47, and -55.

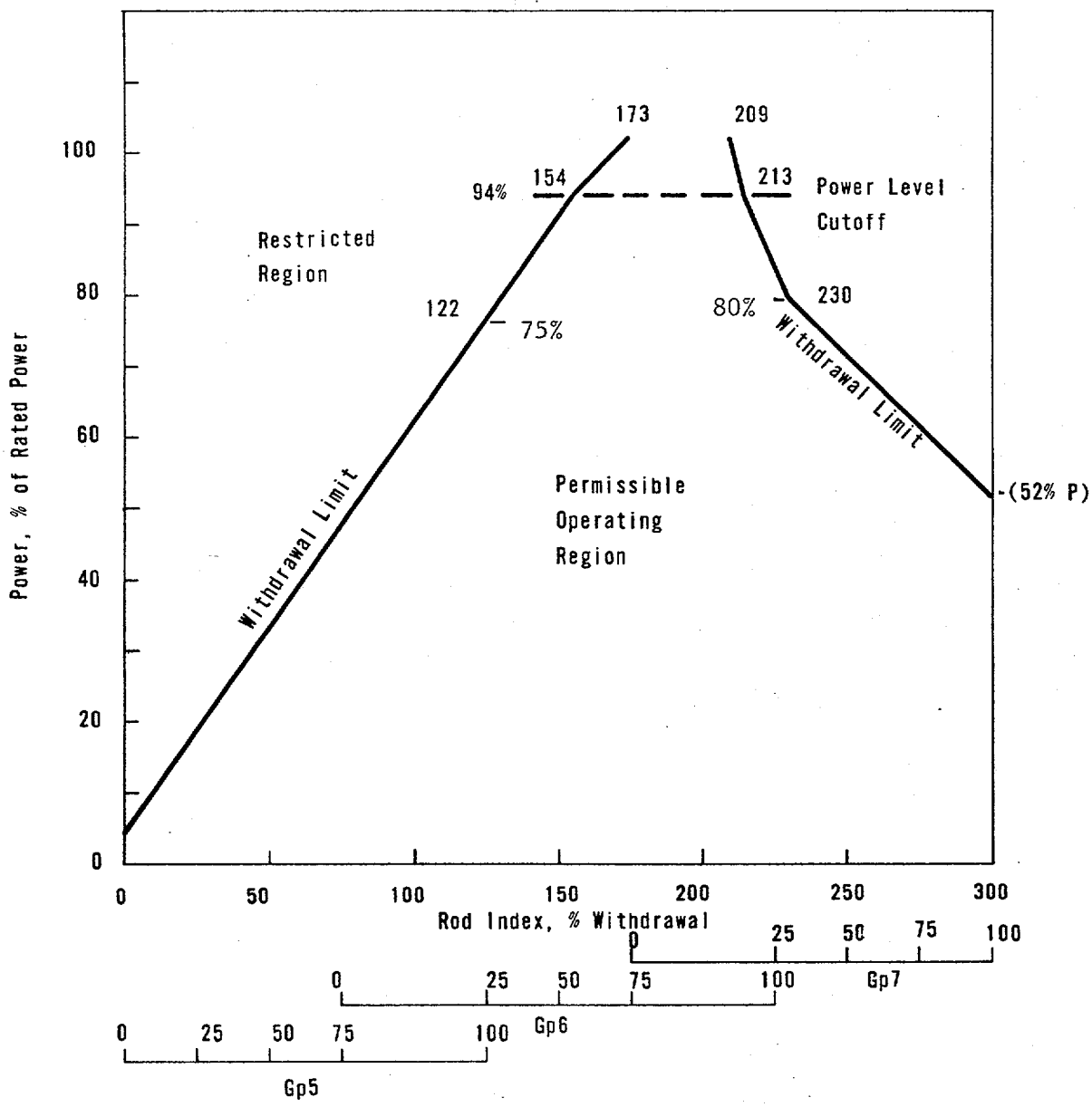

CONTROL ROD GROUP WITHDRAWAL LIMITS FOR
4 PUMP OPERATION

UNIT 1

OCONEE NUCLEAR STATION

Figure 3.5.2-1A1 | 16/11/3

NOV 26 1974

BLANK PAGE

NOV 26 1974

1. Rod index is the percentage sum of the withdrawal of the operating groups. (The applicable power level cutoff is 100% power)

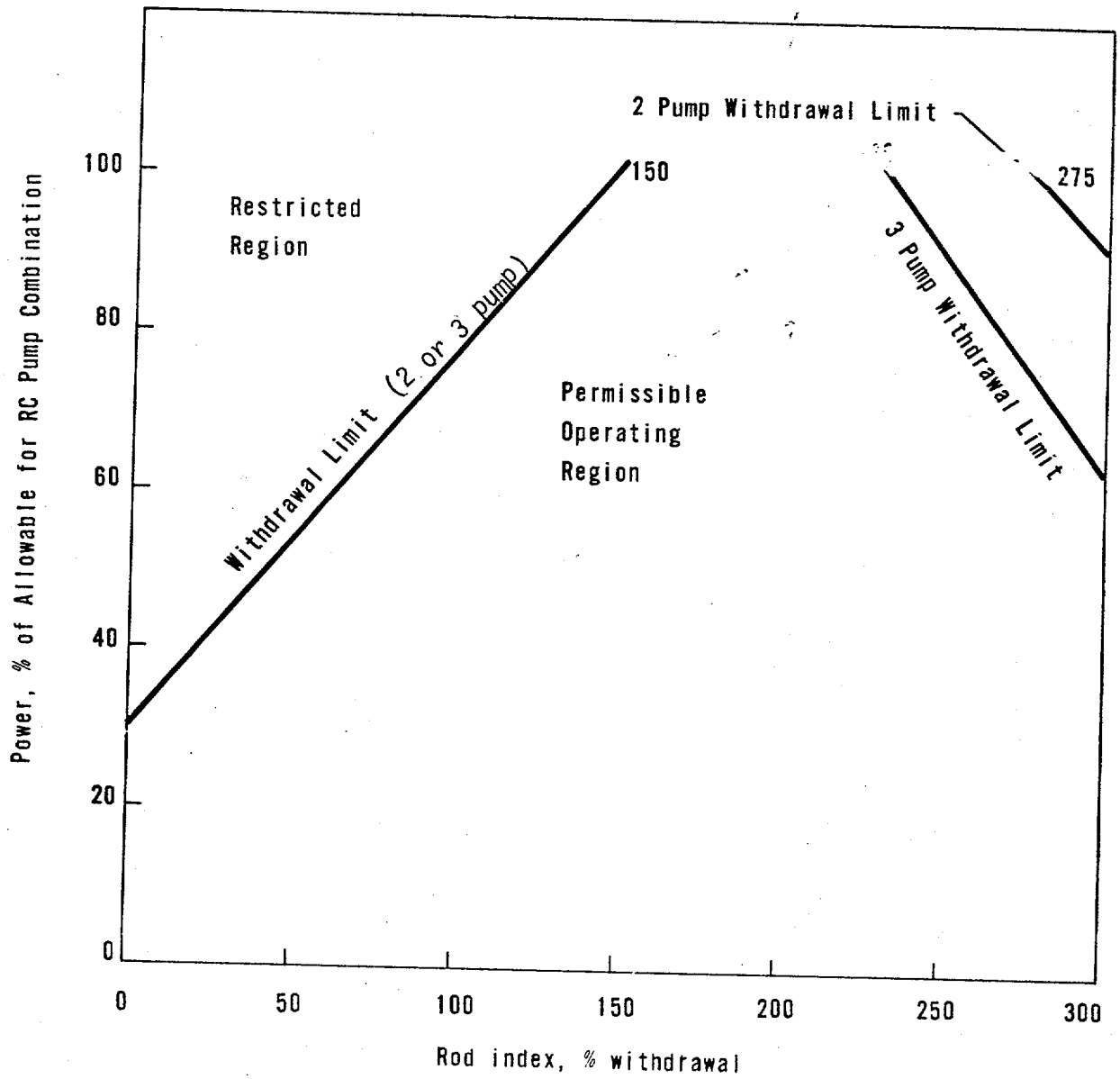

CONTROL ROD GROUP WITHDRAWAL LIMITS FOR 3 AND 2 PUMP OPERATION

UNIT 1

OCONEE NUCLEAR STATION

Figure 3.5.2-2A | 16/11/3

NOV 26 1974

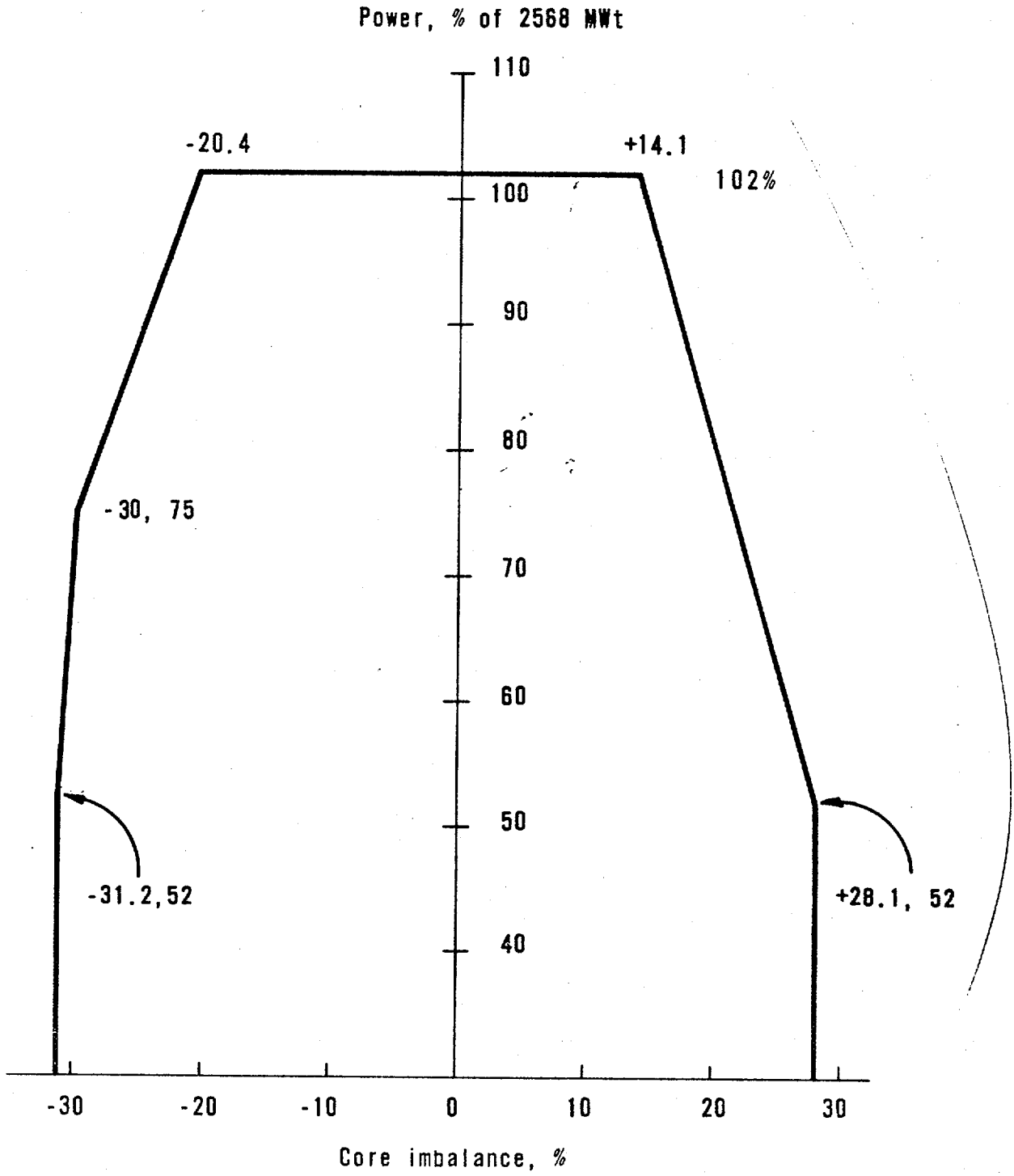

OPERATIONAL POWER IMBALANCE ENVELOPE

UNIT 1

OCONEE NUCLEAR STATION

Figure 3.5.2-3A | 16/11/

NOV 26 1974

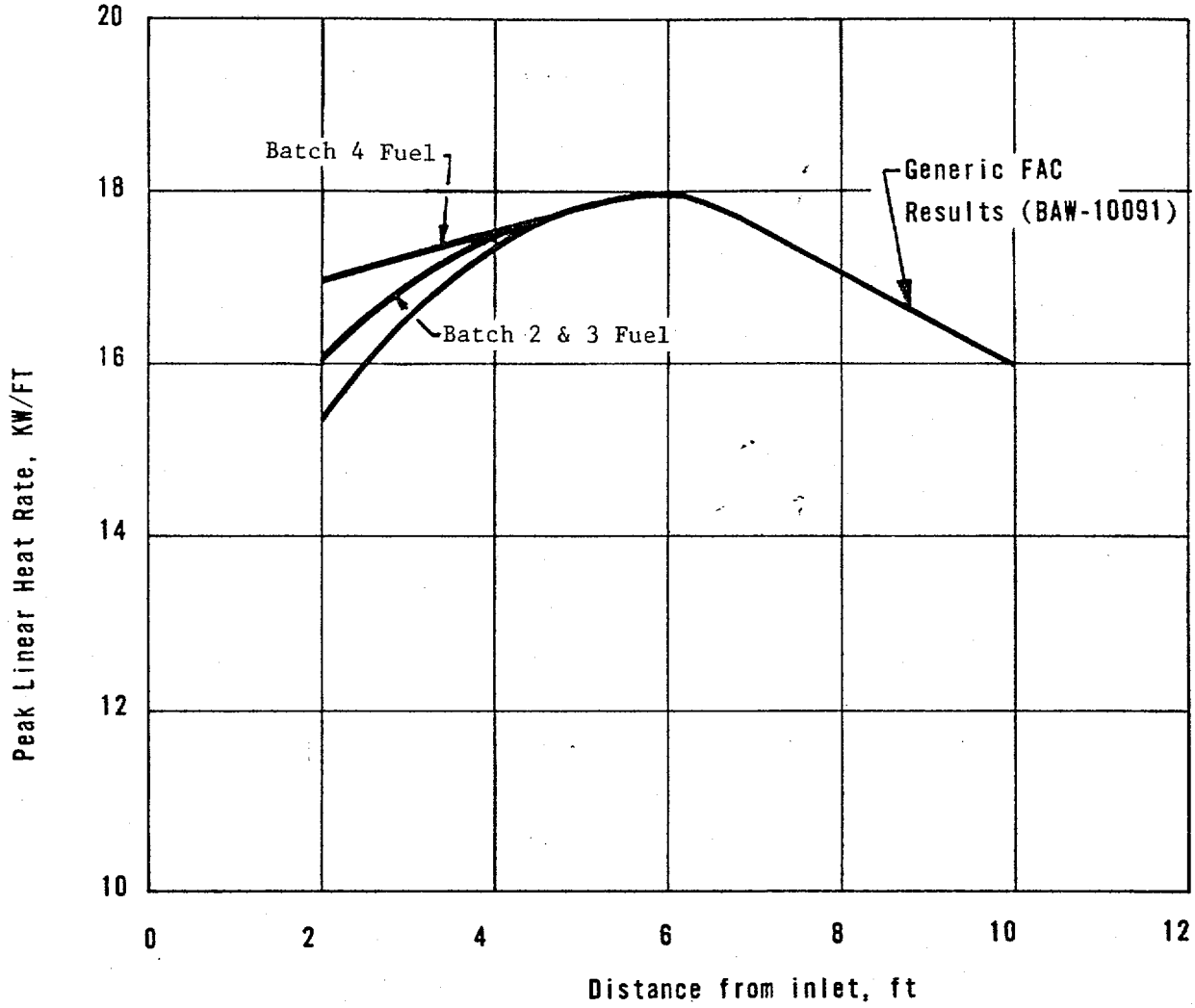

LOCA LIMITED MAXIMUM ALLOWABLE LINEAR HEAT RATE

OCONEE NUCLEAR STATION

Figure 3.5.2-4 16/11/3

NOV 26 1974

3.11 MAXIMUM POWER RESTRICTION

Applicability

Applies to the nuclear steam supply system of Units 2 and 3 reactors.

Objective

To maintain core life margin in reserve until the system has performed under operating conditions and design objectives for a significant period of time.

Specification

16/11/3

3.11.1 The first reactor core in Unit 2 may not be operated beyond 11,040 effective full power hours until supporting analysis and data pertinent to fuel clad collapse under fuel densification conditions have been approved by the Directorate of Licensing.

3.11.2 The first reactor core in Unit 3 may not be operated beyond 10,944 effective full power hours until supporting analysis and data pertinent to fuel clad collapse under fuel densification conditions have been approved by the Directorate of Licensing.

Bases

The licensing staff has reviewed the effects of fuel densification for the first core in Oconee Units 2 and 3 and concluded that clad collapse will not take place within the first fuel cycle (11,040 effective full power hours for Unit 3 and 10,944 effective full power hours for Unit 3). However, the clad collapse model used is questionable for extrapolation of clad collapse time out beyond the first fuel cycle because of limited experimental verification. 16/11/3

NOV 26 1974

3.5.2 Control Rod Group and Power Distribution Limits

Applicability

This specification applies to power distribution and operation of control rods during power operation.

Objective

To assure an acceptable core power distribution during power operation, to set a limit on potential reactivity insertion from a hypothetical control rod ejection, and to assure core subcriticality after a reactor trip.

Specification

3.5.2.1 The available shutdown margin shall be not less than 1% $\Delta k/k$ with the highest worth control rod fully withdrawn.

3.5.2.2 Operation with inoperable rods:

a. If a control rod is misaligned with its group average by more than an indicated nine (9) inches, the rod shall be declared inoperable. The rod with the greatest misalignment shall be evaluated first. The position of a rod declared inoperable due to misalignment shall not be included in computing the average position of the group for determining the operability of rods with lesser misalignments.

b. If a control rod cannot be exercised, or if it cannot be located with absolute or relative position indications or in or out limit lights, the rod shall be declared to be inoperable.

c. If a control rod cannot meet the requirements of Specification 4.7.1, the rod shall be declared inoperable.

d. If a control rod is found to be improperly programmed per Specification 4.7.2, the rod shall be declared inoperable until properly programmed.

e. Operation with more than one inoperable rod in the safety or regulating rod groups shall not be permitted.

f. If a control rod in the regulating or safety rod groups is declared inoperable in the withdrawn position, an evaluation shall be initiated immediately to verify the existance of 1% $\Delta k/k$ hot shutdown margin. Boration may be initiated either to the worth of the inoperable rod or until the regulating and transient rod groups are fully withdrawn, whichever occurs first. Simultaneously, a program of exercising the remaining regulating and safety rods shall be initiated to verify operability.

NOV 26 1974

g. If within one (1) hour of determination of an inoperable rod, it is not determined that a 1%Δk/k hot shutdown margin exists combining the worth of the inoperable rod with each of the other rods, the reactor shall be brought to the hot standby condition until this margin is established.

h. Following the determination of an inoperable rod, all rods shall be exercised within 24 hours and exercised weekly until the rod problem is solved.

i. If a control rod in the regulating or safety rod groups is declared inoperable, power shall be reduced to 60 percent of the thermal power allowable for the reactor coolant pump combination.

j. If a control rod in the regulating or axial power shaping groups is declared inoperable, operation above 60 percent of rated power may continue provided the rods in the group are positioned such that the rod that was declared inoperable is maintained within allowable group average position limits of Specification 3.5.2.2.a and the withdrawal limits of Specification 3.5.2.5.c.

3.5.2.3 The worth of a single inserted control rod shall not exceed 0.5% Δk/k at rated power or 1.0% Δk/k at hot zero power except for physics testing when the requirements of Specification 3.1.9 shall apply.

3.5.2.4 Quadrant Power Tilt

a. Whenever the quadrant power tilt exceeds 4 percent, except for physics tests, the quadrant tilt shall be reduced to less than 4 percent within two hours or the following actions shall be taken:

(1) If four reactor coolant pumps are in operation, the allowable thermal power shall be reduced by 2 percent of full power for each 1 percent tilt in excess of 4 percent below the power level cutoff (see Figures 3.5.2-1A1, 3.5.3-1B1, 3.5.2-1B2, 3.5.2-1B3, 3.5.2-1C1, 3.5.2-1C2, and 3.5.2-1C3). 16/11/3

(2) If less than four reactor coolant pumps are in operation, the allowable thermal power shall be reduced by 2 percent of full power for each 1 percent tilt below the power allowable for the reactor coolant pump combination as defined by Specification 2.3.

(3) Except as provided in 3.5.2.4.b, the reactor shall be brought to the hot shutdown condition within four hours if the quadrant tilt is not reduced to less than 4 percent after 24 hours.

b. If the quadrant tilt exceeds 4 percent and there is simultaneous indication of a misaligned control rod per Specification 3.5.2.2, reactor operation may continue provided power is reduced to 60 percent of the thermal power allowable for the reactor coolant

pump combination.

c. Except for physics tests, if quadrant tilt exceeds 9 percent, a controlled shutdown shall be initiated immediately and the reactor shall be brought to the hot shutdown condition within four hours.

d. Whenever the reactor is brought to hot shutdown pursuant to 3.5.2.4.a(3) or 3.5.2.4.c above, subsequent reactor operation is permitted for the purpose of measurement, testing, and corrective action provided the thermal power and the power range high flux setpoint allowable for the reactor coolant pump combination are restricted by a reduction of 2 percent of full power for each 1 percent tilt for the maximum tilt observed prior to shutdown.

e. Quadrant power tilt shall be monitored on a minimum frequency of once every two hours during power operation above 15 percent of rated power.

3.5.2.5 Control Rod Positions

a. Technical Specification 3.1.3.5 (safety rod withdrawal) does not prohibit the exercising of individual safety rods as required by Table 4.1-2 or apply to inoperable safety rod limits in Technical Specification 3.5.2.2.

b. Operating rod group overlap shall be 25% ± 5% between two sequential groups, except for physics tests.

c. Except for physics tests or exercising control rods, the control rod withdrawal limits are specified on Figures 3.5.2-1A1 (Unit 1), 3.5.2-1B1, 3.5.2-1B2 and 3.5.2-1B3 (Unit 2), and 3.5.2-1C1, 3.5.2-1C2, and 3.5.2-1C3 (Unit 3) for four pump operation and on Figures 3.5.2-2A (Unit 1), 3.5.2-2B (Unit 2), and 3.5.2-2C (Unit 3) for three or two pump operation. If the control rod position limits are exceeded, corrective measures shall be taken immediately to achieve an acceptable control rod position. Acceptable control rod positions shall then be attained within two hours. 16/11/

d. Except for physics tests, power shall not be increased above the power level cutoff as shown on Figure 3.5.2-1A1 (Unit 1), 3.5.2-1B1, 3.5.2-1B2, and 3.5.2-1B3 (Unit 2), and 3.5.2-1C1, 3.5.2-1C2, and 3.5.2-1C3 (Unit 3), unless the following requirements are met. 16/11/

(1) The xenon reactivity shall be within 10 percent of the value for operation at steady-state rated power.

(2) The xenon reactivity shall be asymptotically approaching the value for operation at steady-state rated power.

NOV 26 1974

3.5.2.6 Reactor power imbalance shall be monitored on a frequency not to exceed two hours during power operation above 40 percent rated power. Except for physics tests, imbalance shall be maintained within the envelope defined by Figures 3.5.2-3A, 3.5.2-3B, and 3.5.2-3C. If the imbalance is not within the envelope defined by Figure 3.5.2-3A, 3.5.2-3B, and 3.5.2-3C, corrective measures shall be taken to achieve an acceptable imbalance. If an acceptable imbalance is not achieved within two hours, reactor power shall be reduced until imbalance limits are met. 16/11/3

3.5.2.7 The control rod drive patch panels shall be locked at all times with limited access to be authorized by the superintendent.

16/11/3

NOV 26 1974

Bases

The power-imbalance envelope defined in Figures 3.5.2-3A, 3.5.2-3B, and 3.5.2-3C is based on LOCA analyses which have defined the maximum linear heat rate (see Figure 3.5.2-4) such that the maximum clad temperature will not exceed the Final Acceptance Criteria. Corrective measures will be taken immediately should the indicated quadrant tilt, rod position, or imbalance be outside their specified boundary. Operation in a situation that would cause the Final acceptance criteria to be approached should a LOCA occur is highly improbable because all of the power distribution parameters (quadrant tilt, rod position, and imbalance) must be at their limits while simultaneously all other engineering and uncertainty factors are also at their limits.** Conservatism is introduced by application of:

a. Nuclear uncertainty factors
b. Thermal calibration
c. Fuel densification effects
d. Hot rod manufacturing tolerance factors

The 25% ± 5% overlap between successive control rod groups is allowed since the worth of a rod is lower at the upper and lower part of the stroke. Control rods are arranged in groups or banks defined as follows:

Group	Function
1	Safety
2	Safety
3	Safety
4	Safety
5	Regulating
6	Regulating
7	Xenon transient override
8	APSR (axial power shaping bank)

The minimum available rod worth provides for achieving hot shutdown by reactor trip at any time assuming the highest worth control rod remains in the full out position.(1)

Inserted rod groups during power operation will not contain single rod worths greater than0.5% Δk/k. This value has been shown to be safe by the safety analysis of the hypothetical rod ejection accident.(2) A single inserted control rod worth of 1.0% Δk/k at beginning of life, hot, zero power would result in the same transient peak thermal power and, therefore, the same environmental consequences as a 0.5% Δk/k ejected rod worth at rated power.

Control rod groups are withdrawn in sequence beginning with Group 1. Groups 5, 6, and 7 are overlapped 25 percent. The normal position at power is for Groups 6 and 7 to be partially inserted.

**Actual operating limits depend on whether or not incore or excore detectors are used and their respective instrument and calibration errors. The method used to define the operating limits is defined in plant operating procedures.

NOV 26 1974

The quadrant power tilt limits set forth in Specification 3.5.2.4 have been established within the thermal analysis design base using the definition of quadrant power tilt given in Technical Specifications, Section 1.6. These limits in conjunction with the control rod position limits in Specification 3.5.2.5c ensure that design peak heat rate criteria are not exceeded during normal operation when including the effects of potential fuel densification.

The quadrant tilt and axial imbalance monitoring in Specifications 3.5.2.4 and 3.5.2.6, respectively, normally will be performed in the process computer. The two-hour frequency for monitoring these quantities will provide adequate surveillance when the computer is out of service.

Allowance is provided for withdrawal limits and reactor power imbalance limits to be exceeded for a period of two hours without specification violation. Acceptance rod positions and imbalance must be achieved within the two-hour time period or appropriate action such as a reduction of power taken.

16/11/3

Operating restrictions are included in Technical Specification 3.5.2.5d to prevent excessive power peaking by transient xenon. The xenon reactivity must be beyond the "undershoot" region and asymptotically approaching its equilibrium value at rated power.

REFERENCES

[1] Section 3.2.2.1.2

[2] Section 14.2.2.2

NOV 26 1974

UNITED STATES
ATOMIC ENERGY COMMISSION
WASHINGTON, D.C. 20545

SAFETY EVALUATION BY THE DIRECTORATE OF LICENSING

SUPPORTING AMENDMENT NO. 6 TO FACILITY LICENSE NO. DPR-38 CHANGE NO. 16 TO TECHNICAL SPECIFICATIONS;

AMENDMENT NO. 6 TO FACILITY LICENSE NO. DPR-47 CHANGE NO. 11 TO TECHNICAL SPECIFICATIONS;

AMENDMENT NO. 3 TO FACILITY LICENSE NO. DPR-55 CHANGE NO. 3 TO TECHNICAL SPECIFICATIONS;

DUKE POWER COMPANY

OCONEE NUCLEAR STATION, UNITS 1, 2, AND 3

DOCKET NOS. 50-269, 50-270, AND 50-287

Introduction

By letter dated September 20, 1974, and supplemented by letters of October 8, 1974, and October 31, 1974, Duke Power Company (the Licensee) requested changes to the Technical Specifications appended to Facility Operating License No. DPR-38 for the Oconee Power Station, Unit 1. The purpose of the request is to revise the Oconee Technical Specifications as required to operate within the appropriate fuel and core design limits during the second fuel cycle.

Discussion

The reloading of the core for fuel cycle 2 will involve the removal of approximately 1/3 of the fuel assemblies in the core, the reassignment of the remaining 2/3 of the fuel assemblies in the core, and the replacement of the depleted fuel with new fuel. The fuel to be added to the core is not significantly different in design or in operating characteristics from the original fuel it replaces. However, the rearrangement of fuel

assemblies in the reloaded core does affect core physics and thermal-hydraulic calculations and, as a result, changes to the Technical Specifications are required.

Evaluation

The submittal was reviewed with particular attention to the areas of revised safety analyses and safety margins, adherence to both the interim and final acceptance criteria, changes in the Technical Specifications, and generic considerations (e.g. fuel densification and cladding creep collapse).

Babcox & Wilcox's report BAW 1409 ("Oconee 1, Cycle 2 Reload Report"), which accompanied the Licensee's submittal, discusses the reanalysis of the two limiting accidents of cycle 1 (rod ejection and LOCA) and demonstrates that these cycle 1 limiting accidents are also the limiting accidents for cycle 2. The reanalysis of the two limiting accidents resulted in the conclusion that the consequences are no more severe than previously reported for cycle 1 operation. All other accidents analyzed in the Oconee Final Safety Analysis Report were also reviewed and it was determined that these analyses remain valid and the probability or consequence of these accidents will not be increased.

We also determined that no safety margin or design limit will be exceeded as a result of this change and that the Licensee's submittal appropriately accounts for the effect of fuel densification and fuel cladding creep collapse.

The analytical methods used by the Licensee for cycle 2 are unchanged from those used in original analyses or are methods already found acceptable by the AEC and previously applied to Oconee Unit 1. For example, the critical heat flux correlation (BAW 2) used in this analysis has been favorably evaluated in Supplement 1 to the North Anna Power Station Units 3 and 4 Safety Evaluation (February 21, 1973). This correlation was applied to Oconee Unit 1 in Supplement 17 of the Oconee Final Safety Analysis Report.

The Licensee has stated that the proposed Technical Specifications are in conformance with both the interim acceptance criteria and Appendix K to 10 CFR Part 50 for the first 250 effective full power days of operation.

The proposed Technical Specification for control rod group withdrawal limits (fig. 3.5.2 -1A2) that are required to be used after 250 effective full power days conforms only to the Licensee's proposed Appendix K submittal, and would not conform to the interim acceptance criteria.

10 CFR 50.46 requires that the operation of the facility be within the limits of both the proposed Appendix K Technical Specifications and the existing Technical Specifications based on the Interim Policy Statement until the proposed Appendix K Technical Specifications have been approved. This approval has not been granted and since the proposed Figure 3.5.2 - 1A does not conform to the Interim Acceptance Criteria we cannot include the Technical Specification Illustrated by Figure 3.5.2 - 1A2 as proposed by the Licensee. The effect of deleting this proposed Technical Specification is to limit cycle 2 to 250 effective full power days.

The nuclear, mechanical, and thermal-hydraulic analyses that were performed by the Licensee to establish the appropriate operating limits and set-points for cycle 2 operation were reviewed and found to be methods previously used and found acceptable by the AEC for Oconee Unit 1 (e.g. see above discussion of BAW 2). The proposed Technical Specification changes which incorporate these limits and set-points were reviewed and found to be consistent with the reanalyses, and therefore acceptable (except for fig. 3.5.2 - 1A2, as discussed above). None of the proposed Technical Specification changes would increase the probability or consequence of postulated accidents previously analyzed. The bases of the Technical Specifications have been revised to show the result of this reanalysis. However, the method and procedures described in these bases remain unchanged.

Conclusion

We have concluded, based on the reasons discussed above, that the authorization of these changes does not involve a significant hazards consideration. We also conclude that there is reasonable assurance (i) that the activities authorized by these amendments can be conducted without endangering the health and safety of the public, and (ii) that such activities will be conducted in compliance with the Commission's regulations and the issuance of these amendments will not be inimical to the common defense and security or to the health and safety of the public.

Leo McDonough
Operating Reactors Branch #1
Directorate of Licensing

Robert A. Purple, Chief
Operating Reactors Branch #1
Directorate of Licensing

Date: November 26, 1974

UNITED STATES ATOMIC ENERGY COMMISSION

DOCKET NOS. 50-269, 50-270, AND 50-287

DUKE POWER COMPANY

NOTICE OF ISSUANCE OF AMENDMENTS TO FACILITY OPERATING LICENSES

Notice is hereby given that the U.S. Atomic Energy Commission (the Commission) has issued Amendments No. 6, 6, and 3 to Facility Operating Licenses No. DPR-38, DPR-47, and DPR-55, respectively, issued to Duke Power Company which revised Technical Specifications for operation of the Oconee Nuclear Station, Units 1, 2, and 3, located in Oconee County, South Carolina. The amendments are effective as of the date of issuance.

These amendments include the Technical Specification changes required for the second fuel cycle operation of Oconee Unit 1.

The application for the amendments complies with the standards and requirements of the Atomic Energy Act of 1954, as amended (the Act), and the Commission's rules and regulations. The Commission has made appropriate findings as required by the Act and the Commission's rules and regulations in 10 CFR Chapter I, which are set forth in the license amendments.

For further details with respect to this action, see (1) the application for amendments dated September 20, 1974, as supplemented October 8 and 31, 1974, (2) Amendments No. 6, 6, and 3 to Licenses No. DPR-38,

DPR-48, and DPR-55, with any attachments, and (3) the Commission's related Safety Evaluation. All of these items are available for public inspection at the Commission's Public Document Room, 1717 H Street, NW., Washington, D.C. and at the Oconee County Library, 201 South Spring Street, Walhalla, South Carolina 29691.

A copy of items (2) and (3) may be obtained upon request addressed to the U.S. Atomic Energy Commission, Washington, D.C. 20545, Attention: Deputy Director for Reactor Projects, Directorate of Licensing - Regulation.

Dated at Bethesda, Maryland, this NOV 26 1974

FOR THE ATOMIC ENERGY COMMISSION

Original signed by
R. A. Purple

Robert A. Purple, Chief
Operating Reactors Branch #1
Directorate of Licensing

OFFICE ➤						
SURNAME ➤						
DATE ➤						

1/2

PRELIMINARY DETERMINATION

NOTICING OF PROPOSED LICENSING AMENDMENT

Licensee: Duke Power Company (Oconee 1)

Request for: Second fuel cycle core reloading.

Request Date: By November 20, 1974

Proposed Action: ( ) Pre-notice Recommended

(X) Post-notice Recommended

( ) Determination delayed pending completion of Safety Evaluation

Basis for Decision: These changes are a result of the proposed second fuel cycle core reloading. The fuel assemblies are not significantly different from those previously used and the analytical methods used are unchanged or are methods already found acceptable.

The basis has been changed, however, this change was made to note the use of "as built" data and the use of the BAW-2 (an approved report) critical heat flux correlation to predict the departure from nucleate boiling ratio.

continued on back - - - - - - -

Amdts 6,6,3
Changes 16,11,3
issued 11/26/74
to OGC 10/04
back to OGC 10/18
routed to LAP, CMcD &
Shirley 10/18

CONCURRENCES:

1. L. McDonough 10/2
2. R. A. Purple 10/2
3. K. R. Goller 10/3
4.
5. Office of General Counsel

The preliminary determination on maximum power restriction for Oconee 1 is attached as a source of additional information on this proposed change.