Office of Civilian Radioactive Waste Management

Corner Drop of 21-PWR Waste Packages
CAL-UDC-ME-000008
REV 00

November 2000

WM-11
NMSS07

OFFICE OF CIVILIAN RADIOACTIVE WASTE MANAGEMENT
CALCULATION COVER SHEET

1. QA: QA

2. Calculation Title
Corner Drop of 21-PWR Waste Package

3. Document Identifier (including Revision Number)
CAL-UDC-ME-000008 REV 00

4. Total Attachments	5. Attachment Numbers - Number of pages in each
3	I-3, II-37, III on Compact Disc (CD)

	Print Name	Signature	Date
6. Originator	Adam K. Scheider	Adam K. Scheider	NOV 3, 2000
7. Checker	Timothy Schmitt	Tim Schmitt	Nov 3, 2000
8. Lead	Scott M. Bennett	Scott M. Bennett	11/03/2000

9. Remarks
Attachment II and attachment III from Rev 00B were moved to Rev 00.

Revision History

10. Revision No.	11. Description of Revision
00	Initial Issuance.

CONTENTS

FIGURES

Page

1. PURPOSE

The objective of this calculation is to determine the structural response of the waste package (WP) dropped on its corner from a specified height. The center of gravity and the outside edge of the WP must form a straight line perpendicular to the unyielding surface on which the WP is dropped. The WP used for that purpose is the 21-Pressurized Water Reactor (PWR) WP. The scope of this document is limited to reporting the calculation results in terms of stress intensities. This calculation is associated with the WP design and was performed by the Waste Package Design group in accordance with the development plan *TDP for Corner Drop of 21-PWR Waste Package* (Ref. 16). AP-3.12Q, *Calculations* (Ref. 11) is used to perform the calculation and develop the document. The sketches attached to this calculation provide the potential dimensions and materials for the 21-PWR WP design.

2. METHOD

The finite element calculation was performed by using the commercially available ANSYS Version (V) 5.4 and LS-DYNA V950 finite element codes. The results of this calculation were provided in terms of maximum stress intensities.

With regard to the development of this calculation, the control of electronic management of data was evaluated in accordance with AP-SV.1Q, *Control of the Electronic Management of Information* (Ref. 10). The evaluation (Ref. 17) determined that current work processes and procedures are adequate for the control of the electronic management of data for this activity.

3. ASSUMPTIONS

In the course of developing this document, the following assumptions are made regarding the structural calculation.

3.1 Some of the temperature-dependentmaterial properties are not available for SB-575 N06022 (Alloy 22), SA-516 K02700 (516 carbon steel [CS]), and SA-240 S31600 (316 stainless steel [SS]). The room-temperature (20 °C) material properties are assumed for both materials. The impact of using room-temperature material properties is anticipated to be small. The rationale for this assumption is that undetermined mechanical properties of said materials will not significantly impact the results. This assumption is used in Section 5.2.

3.2 The Poisson's ratio of Alloy 22 is not available in literature. The Poisson's ratio of Alloy 625 (SB-443 N06625) is assumed for Alloy 22. The impact of this assumption is anticipated to be negligible. The rationale for this assumption is that the chemical compositions of Alloy 22 and Alloy 625 are similar (see Ref. 2, Table 1 and Ref. 3, p. 143, respectively). This assumption is used in Section 5.2.

3.3 Some of the rate-dependent material properties are not available for SB-575 N06022 (Alloy 22), SA-516 K02700 (516 carbon steel [CS]), and SA-240 S31600 (316 stainless steel [SS]). Linear approximations are assumed for both materials. The impact of using such an approximation is anticipated to be small. The rationale for this assumption is that this is the most common and accepted way of approximating these properties. This assumption is used in Section 5.3

3.4 Poisson's ratio was not available for 516 CS. Therefore, Poisson's ratio of cast carbon steel was assumed for 516 CS. The impact of this assumption was anticipated to be negligible. The rationale for this assumption was that the elastic constants of cast carbon steels are only slightly affected by changes in composition and structure (see Ref. 2). This assumption was used in Section 5.2.

3.5 The exact geometry of the loaded internals was simplified for the purpose of this calculation. The fuel baskets, thermal shunts, spent nuclear fuel, and all other internals were created as a solid cylinder with an appropriate mass value. The rationale for this assumption was to simplify the finite element representation (FER). This assumption was used in Section 5.4.

3.6 The elongations of Alloy 22 and 316NG SS at elevated temperatures were not available from traditional sources. However, vendor data is available (Ref. 6 and Ref. 18). The percent difference between elongations at room temperature and elevated temperatures can be normalized and applied to the data available from accepted codes. The rationale for this assumption was to be as reasonably accurate as possible. It would not be logical for the elongation values to remain constant over the range of temperatures under consideration. This assumption is used in Section 5.2.1.

4. USE OF COMPUTER SOFTWARE AND MODELS

4.1 SOFTWARE

The finite element analysis computer code used for this calculation is ANSYS V5.4, which is identified with the Computer Software Configuration Item (CSCI) 30040 V5.4 and was obtained from Software Configuration Management in accordance with appropriate procedures. ANSYS V5.4 is a commercially available finite element analysis code and is appropriate for structural calculations of WP as performed in this calculation. The calculations using the ANSYS V5.4 software were executed on a Hewlett-Packard (HP) UNIX workstation, Civilian Radioactive Waste Management System (CRWMS) Management and Operating Contractor (M&O) tag number 700314. The software qualification of the ANSYS V5.4 software is summarized in the Software Qualification Report for ANSYS V5.4 (Ref. 8). Qualification of ANSYS V5.4 on the Waste Package Operations (WPO) HP UNIX workstations is documented in Reference 5. The ANSYS evaluations performed for these designs are fully within the range of the validation performed for the ANSYS V5.4 code. Access to the code was granted by the Software Configuration Secretariat in accordance with the appropriate procedures.

Livermore Software Technology Corporation (LSTC) LS-DYNA V950, is unqualified software (Ref. 7). The interim use of LS-DYNA V950 (SAN: LV-2000-103, STN: 10300-950-00) in support of the site recommendation is delineated in AP-SI.1Q, *Software Management*, Section 5.11 (Ref. 9). LS-DYNA V950 qualification is being performed as part of the qualification of ANSYS V5.6 since LS-DYNA V950 is available both as a component (module) of ANSYS and as a separate finite element code. Currently, the Waste Package Department licensed LS-DYNA V950 directly from Livermore Software Technology Corporation (LSTC). Software Activity Plan (SAP) for ANSYS V5.6, SDN: 10145-SAP-5.6-00, SAN: LV-2000-103, identifies the intended use of LS-DYNA V950 prior to qualification. LS-SYNA V950 was obtained from the Configuration Management. LS-DYNA V950 is appropriate for its intended use. LS-DYNA V950 validation will be performed in accordance with AP-SI.1Q, Section 5.11. The calculations were executed on a Hewlett-Packard (HP) 9000 series workstation (CRWMS M&O tag number 700314).

The input and output files are defined on page 30 of this document. They may be located in attachment III to this document.

4.2 SOFTWARE ROUTINES

The commercially available software used in this calculation is Pro/Engineer Release (R) 2000i. This software is executed on the HP workstation. Pro/Engineer R 2000i is not controlled computer software and it is not required to be qualified in accordance with Section 2.1 of AP-SI.1Q, *Software Management*.

Attachment IV contains the input/output data obtained from Pro/Engineer R 2000i. The mass densities given in Section 5.2 are used as inputs to Pro/Engineer R 2000i, and corresponding masses of WP components are obtained for the use in structural evaluations. There are no user-operated

equations of mathematical models, algorithms, or numerical solution techniques applicable to the software routine since Pro/Engineer R 2000i is an engineering drawing software package and the subject mass calculations are performed by the source code, based on the dimensions of structural components and the mass density of materials. Verification of this software is accomplished by a test case, as described in Section 5.1.1. The range of input parameter values is limited to the dimensions of the structural components used in those cases; all mass calculations depend on specific geometry of the subject components. No limitations are identified on software routine applications or validity.

4.3 MODELS

None used.

5. CALCULATION

5.1 MASS AND GEOMETRIC DIMENSIONS OF WASTE PACKAGE

This calculation was performed using mass and geometric dimensions of the 21-PWR Waste Package (see pp. I-1 and I-2):

Total mass of the loaded WP = 42,277 *kg*
Length = 5.165 *m*
Outer diameter of outer shell = 1.570 *m*
Outer diameter of trunnion collar sleeve = 1.644 *m*

5.1.1 Verification of Masses Obtained from Pro/Engineer R 2000i

One of the structural components of the 21-PWR WP, the extended lid reinforcement ring (ELRR), was selected for verification of the mass obtained from Pro/Engineer R 2000i. The mass of this component was determined as the product of the mass density (see Section 5.2) and the volume, using the dimensions provided in Attachment I:

EOSLT ≡ Extended Outer Shell Lid Thickness = 0.025 *m*
OSCL ≡ Outer Shell Closure Lid Outside Diameter = 1.527 *m*
*Gap*1 ≡ Gap between OSCL and Outer Shell = 0.004 *m*
*Gap*2 ≡ Gap between Outer Shell and Extended Outer Shell Lid = 0.004 *m*
ELRRT ≡ Extended Lid Reinforcement Ring Thickness = 0.050 *m*

ELRR Outer Diameter = $OSCL + 2 * (Gap1 - Gap2 - EOSLT) = 1.477\ m$
ELRR Inner Diameter = $(ELRR\ Outer\ Diameter) - 2 * ELRRT = 1.377m$
ELRR Mass = $8690\ kg/m^3 * ELRRT * ((1.477\ m)^2 - (1.377\ m)^2) * \pi/4 = 97.39432\ kg$

The mass obtained by the preceding calculation is identical to the mass provided on page II-20.

5.2 MATERIAL PROPERTIES

Material properties used in these calculations are listed in this section. Some of the temperature-dependent and rate-dependent material properties are not available for Alloy 22, 316NG SS, and 514 CS. Therefore, room-temperature density and Poisson's ratio obtained under the static loading conditions are used for for Alloy 22, 316NG SS, and 514 CS (see Assumption 3.1 and 3.3).

SB-575 N06022 (Alloy 22) (Outer shell, outer shell lids, upper and lower trunnion collar sleeves):

- Density = 8690 kg/m^3 (0.314 lb/in^3) (at room temperature) (Ref. 2, SB-575 Section 7.1)

- Yield strength = 310 *MPa* (45 *ksi*) (at room temperature) (Ref. 2, Table Y-1)
  Yield strength = 229 *MPa* (33.2 *ksi*) (at 400 °F = 204 °C) (Ref. 2, Table Y-1)
  Yield strength = 222 *MPa* (32.2 *ksi*) (at 600 °F = 316 °C) (Ref. 2, Table Y-1)

- Tensile strength = 690 *MPa* (100 *ksi*) (at room temperature) (Ref. 2, Table U)
  Tensile strength = 657 *MPa* (95.3 *ksi*) (at 400 °F = 204 °C) (Ref. 2, Table U)
  Tensile strength = 641 *MPa* (92.9 *ksi*) (at 600 °F = 316 °C) (Ref. 2, Table U)

- Elongation = 0.45 (at room temperature) (Ref. 2, SB-575 Table 3)

- Poisson's ratio = 0.278 (at room temperature) (Ref. 1, p. 143; see Assumption 3.4)

- Modulus of elasticity = 206 *GPa* (at room temperature) (Ref. 6, p. 14)
  Modulus of elasticity = 196 *GPa* (at 400 °F = 204 °C) (Ref. 6, p. 14)
  Modulus of elasticity = 190 *GPa* (at 600 °F = 316 °C) (Ref. 6, p. 14)

SA-240 S31600 (316NG SS, which is 316 SS with tightened control on carbon and nitrogen content and has the same material properties as 316 SS [see Ref. 19]) (Inner shell and inner shell lids):

- Density = 7980 kg/m^3 (at room temperature) (Ref. 14, Table X1, p. 7)

- Yield strength = 205 *MPa* (30 *ksi*) (at room temperature) (Ref. 2, Table Y-1)
  Yield strength = 148 *MPa* (21.4 *ksi*) (at 400 °F = 204 °C) (Ref. 2, Table Y-1)
  Yield strength = 130 *MPa* (18.9 *ksi*) (at 600 °F = 316 °C) (Ref. 2, Table Y-1)

- Tensile strength = 515 *MPa* (75 *ksi*) (at room temperature) (Ref. 2, Table U)
  Tensile strength = 496 *MPa* (71.9 *ksi*) (at 400 °F = 204 °C) (Ref. 2, Table U)
  Tensile strength = 495 *MPa* (71.8 *ksi*) (at 600 °F = 316 °C) (Ref. 2, Table U)

- Elongation = 0.40 (at room temperature) (Ref. 2, SA-240 Table 2)

- Poisson's ratio = 0.298 (at room temperature) (Ref. 13, Figure 15, p. 755)

- Modulus of elasticity = 195 *GPa* (28.3 * 10^6 *psi*) (at room temperature) (Ref. 2, Table TM-1)
  Modulus of elasticity = 183 *GPa* (26.5 * 10^6 *psi*) (at 400 °F = 204 °C) (Ref. 2, Table TM-1)
  Modulus of elasticity = 174 *GPa* (25.3 * 10^6 *psi*) (at 600 °F = 316 °C) (Ref. 2, Table TM-1)

SA-516 K02700 (516 CS) (Sideguides, stiffeners, and baskets):

- Density = 7850 kg/m^3 (at room temperature) (Ref. 2, SA-20/SA20M, Section 14.1)

- Yield strength = 262 *MPa* (38 *ksi*) (at room temperature) (Ref. 2, Table Y-1)
  Yield strength = 224 *MPa* (32.5 *ksi*) (at 400 °F = 204 °C) (Ref. 2, Table Y-1)
  Yield strength = 201 *MPa* (29.1 *ksi*) (at 600 °F = 316 °C) (Ref. 2, Table Y-1)

- Tensile strength = 483 *MPa* (70 *ksi*) (at room temperature) (Ref. 2, Table U)
  Tensile strength = 483 *MPa* (70 *ksi*) (at 400 °F = 204 °C) (Ref. 2, Table U)
  Tensile strength = 483 *MPa* (70 *ksi*) (at 600 °F = 316 °C) (Ref. 2, Table U)

- Elongation = 0.21 (at room temperature) (Ref. 2, SA-240 Table 2)

- Poisson's ratio = 0.3 (at room temperature) (Ref. 3, p. 374) (see Assumption 3.4)

- Modulus of elasticity = 203 *GPa* (29.5 * 10^6 *psi*) (at room temperature) (Ref. 2, Table TM-1)
  Modulus of elasticity = 191 *GPa* (27.7 * 10^6 *psi*) (at 400 °F = 204 °C) (Ref. 2, Table TM-1)
  Modulus of elasticity = 184 *GPa* (26.7 * 10^6 *psi*) (at 600 °F = 316 °C) (Ref. 2, Table TM-1)

5.2.1 Calculations for Elevated-Temperature Material Properties

The values for elongation at elevated temperatures are not listed in conventional listings such as American Society for Testing and Materials (ASTM) Standards or American Society of Mechanical Engineers (ASME) Boiler and Pressure Vessel Code. However, the elongation values at elevated temperatures are available from vendor data. This vendor data will be used in a *qualitative* manner (see Assumption 3.6).

For Alloy 22, the vendor data shows a 5.7% increase in elongation values between 400 °F and room temperature and a 13% increase between 600 °F and room temperature (Ref. 6).

Therefore the elongation values for Alloy 22 at elevated temperatures will be as follows:

Elongation $_{400\,°F}$ = 0.45 * 1.057 = 0.48
Elongation $_{600\,°F}$ = 0.45 * 1.13 = 0.51

For SS 316, the vendor data shows a 25% decrease in elongation values between 400 °F and room temperature and a 29% decrease between 600 °F and room temperature (Ref. 18).

Therefore the elongation values for SS 316 at elevated temperatures will be as follows:

Elongation $_{400\,°F}$ = 0.40 * (1 – 0.25) = 0.30
Elongation $_{600\,°F}$ = 0.40 * (1 – 0.29) = 0.28

Since the components made of SA-516 will not be analyzed for stresses, its elongation is not needed at elevated temperatures. The SA-516 components are only needed for their density.

5.2.2 Calculations for True Measures of Ductility

The material properties in Sections 5.1 and 5.1.1 refer to engineering stress and strain definitions:

$$s = \frac{P}{A_0} \text{ and } e = \frac{L - L_0}{L_0}$$

Where P stands for the force applied during static tensile test, L is the deformed-specimen length, and L_0 and A_0 are original length and cross-sectional area of specimen, respectively. It is generally accepted that the engineering stress-strain curve does not give a true indication of the deformation characteristics of a material during the plastic deformation since it is based entirely on the original dimensions of the specimen. Therefore, the LS-DYNA V950 finite element code requires input in terms of true stress and strain definitions:

$$\sigma = \frac{P}{A} \text{ and } \varepsilon = \ln\left(\frac{L}{L_0}\right)$$

The relationships between the true stress and strain definitions and engineering stress and strain definitions can be readily derived based on constancy of volume ($A_0 \cdot L_0 = A \cdot L$) and strain homogeneity during plastic deformation:

$$\sigma = s \cdot (1 + e) \text{ and } \varepsilon = \ln(1 + e)$$

These expressions are applicable only in the hardening region of stress-strain curve that is limited by the onset of necking.

The following parameters are used in the subsequent calculations:

$s_y \approx \sigma_y \equiv$ yield strength

$s_u \equiv$ engineering tensile strength

$\sigma_u \equiv$ true tensile strength

$e_y \approx \varepsilon_y \equiv$ strain corresponding to yield strength

$e_u \equiv$ engineering strain corresponding to tensile strength (engineering uniform strain)

$\varepsilon_u \equiv$ true strain corresponding to tensile strength (true uniform strain)

In absence of the uniform strain data in available literature, it needs to be estimated based on stress-strains curves and elongation (strain corresponding to rupture of the tensile spacimen).

The stress-strain curves for Alloy 22, 316 SS and 316NG SS do not manifest three-stage deformation character (Ref. 12). Therefore, the elongation, reduced by 10% for the sake of conservativism, can be used in place of uniform strain.

In the case of Alloy 22 ($e_u = 0.9 * elongation = 0.41$ at room temperature), the true measures of ductility are

$\varepsilon_u = \ln(1 + e_u) = \ln(1 + 0.41) = 0.34$
$\sigma_u = s_u * (1 + e_u) = 690 * (1 + .41) = 973\ MPa$

<u>400 °F (204 °C) Alloy 22</u>
$\varepsilon_u = \ln(1 + e_u) = \ln(1 + 0.43) = 0.36$
$\sigma_u = s_u * (1 + e_u) = 657 * (1 + .43) = 940\ MPa$

<u>600 °F (316 °C) Alloy 22</u>
$\varepsilon_u = \ln(1 + e_u) = \ln(1 + 0.46) = 0.38$
$\sigma_u = s_u * (1 + e_u) = 641 * (1 + .46) = 936\ MPa$

For 316NG SS at room temperature, $e_u = 0.9 * elongation = 0.36$, therefore:
$\varepsilon_u = \ln(1 + e_u) = \ln(1 + 0.36) = 0.31$
$\sigma_u = s_u * (1 + e_u) = 515 * (1 + .36) = 700\ MPa$

<u>400 °F (204 °C) SS 316NG</u>
$\varepsilon_u = \ln(1 + e_u) = \ln(1 + 0.27) = 0.24$
$\sigma_u = s_u * (1 + e_u) = 496 * (1 + .27) = 630\ MPa$

<u>600 °F (316 °C) SS 316NG</u>
$\varepsilon_u = \ln(1 + e_u) = \ln(1 + 0.26) = 0.23$
$\sigma_u = s_u * (1 + e_u) = 495 * (1 + .46) = 624\ MPa$

5.2.3 Calculations for Tangent Moduli

As previously discussed, the results of this simulation are required to include elastic and plastic deformations for Alloy 22, 516 CS, and 316NG SS. When the materials are driven into the plastic range, the slope of stress-strain curve continuously changes. Thus, a simplification for this curve is needed to incorporate plasticity into the Finite Element Representation (FER). A standard approximation commonly used in engineering is to use a straight line that connects the yield point and the tensile strength point of the material. The parameters used in the subsequent calculations in addition to those defined in Section 5.1.2 are modulus of elasticity (E) and tangent modulus (E_1). The tangent (hardening) modulus represents the slope of the stress-strain curve in the plastic region.

In the case of Alloy 22, the strain corresponding to the yield strength is:

$\varepsilon_{y,rt} = \sigma_y/E = 310 * 10^6 / 206 * 10^9 = 0.0015$ (see Section 5.2.1)

Hence, the tangent modulus at room temperature is:

$E_{1,rt} = (\sigma_{u,rt} - \sigma_{y,rt}) / (\varepsilon_{u,rt} - \varepsilon_{y,rt}) = (0.973 - 0.310)/(0.34 - 0.0015) = 2.0\ GPa$ (see Section 5.2, 5.2.1, and 5.2.2)

<u>For Alloy 22 at 400 °F (204 °C)</u>

$E_{1,400°F} = (\sigma_{u,400°F} - \sigma_{y,400°F}) / (\varepsilon_{u,400°F} - \sigma_{y,400°F}/E_{400°F}) = (0.940 - 0.229)/(0.36 - 229/196e3) = 2.0\ GPa$ (see Section 5.2, 5.2.1, and 5.2.2)

<u>For Alloy 22 at 600 °F (316 °C)</u>

$E_{1,600°F} = (\sigma_{u,600°F} - \sigma_{y,600°F}) / (\varepsilon_{u,600°F} - \sigma_{y,600°F}/E_{600°F}) = (0.936 - 0.222)/(0.38 - 222/190e3) = 1.9\ GPa$ (see Section 5.2, 5.2.1, and 5.2.2)

Similarly, for 316NG SS at room temperature:

$E_{1,rt} = (\sigma_{u,rt} - \sigma_{y,rt}) / (\varepsilon_{u,rt} - \sigma_{y,rt}/E_{rt}) = (0.700 - 0.205)/(0.31 - 205/195e3) = 1.6\ GPa$ (see Section 5.2, 5.2.1, and 5.2.2)

<u>For 316NG SS at 400 °F (204 °C)</u>

$E_{1,400°F} = (\sigma_{u,400°F} - \sigma_{y,400°F}) / (\varepsilon_{u,400°F} - \sigma_{y,400°F}/E_{400°F}) = (0.630 - 0.148)/(0.24 - 148/183e3) = 2.0\ GPa$ (see Section 5.2, 5.2.1, and 5.2.2)

<u>For 316NG SS at 600 °F (316 °C)</u>

$E_{1,600°F} = (\sigma_{u,600°F} - \sigma_{y,600°F}) / (\varepsilon_{u,600°F} - \sigma_{y,600°F}/E_{600°F}) = (0.624 - 0.130)/(0.23 - 130/174e3) = 2.2\ GPa$ (see Section 5.2, 5.2.1, and 5.2.2)

The tangent modulus for 516 CS was not calculated at any temperature. This is because none of the parts made from this material are critical. The parts made from 516 CS are not vital. The density is the most important physical property for these parts. The overall mass comparison will validate the density value chosen for 516 CS (see page 15).

5.3 INITIAL VELOCITY OF WASTE PACKAGE

To reduce the computer execution time while preserving all features of the problem relevant to the structural calculation, the WP is set in a position just before impact and given an appropriate initial velocity as can be seen in Figure 1.

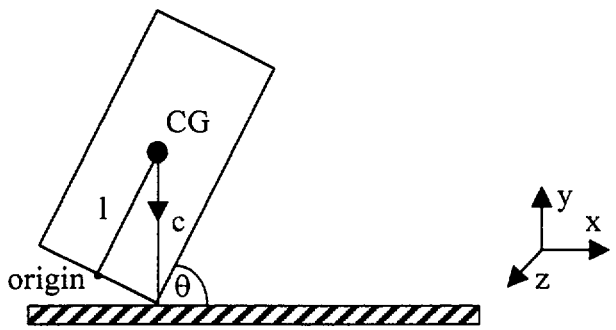

Figure 1. Corner Drop Geometry

Using the following parameters:

g ≡ acceleration due to gravity = 9.81 m/s^2
M ≡ total mass = 42,301 *kg* (Section 5.1)
S ≡ Drop Height = 2.4 *m*
l ≡ length = (5.165 *m*)/2 = 2.583 *m* (Section 5.1)
w ≡ Outer Diameter of trunnion collar sleeve = (1.644 *m*)/2 = 0.822 *m* (Section 5.1)

and Newton's equation of motion:
$V^2 = V_o^2 + 2a(S - S_o)$

Substituting values in yields

$V^2 = 0^2 + 2*(9.81\ m/s^2)*(2.4\ m)$, which reduces to
$V = 6.86\ m/s$

The angle of inclination that the WP makes with the unyielding surface may be calculated using the following method.

$\tan\theta = ({}^{Opposite}/_{Adjacent})$
$\tan\theta = ({}^{l}/_{w})$
$\theta = \tan^{-1}({}^{2583}/_{822}) = 72.3°$

5.4 FINITE ELEMENT REPRESENTATION

A full three-dimensional (3-D) FER of the WP was developed in ANSYS V5.4 using the dimensions provided in Attachment I. The FER was created with the largest possible radial gap of 4 *mm* between the inner and outer shells (Ref. 4). The same gap was used between the fuel basket and the inner shell. The initial orientation of the inner shell maintains this 5 *mm* gap around the circumference of the shell.

The internal structure of the WP was simplified. The internal components of the Inner Shell (fuel basket, thermal shunts, side guides, spent nuclear fuel, etc.) were modeled together using solid elements as a solid cylinder (Assumption 3.5). This significantly lowered the number of contacts within the FER while still maintaining the proper mass needed for the computer run.

The target surface was conservatively assumed to be unyielding. This was accomplished using the *RIGIDWALL command within LS-DYNA. This command creates an invisible rigid wall within LS-DYNA. The unyielding surface shown in the plots has no function. A volume was placed with one of its surfaces coincident with the rigidwall plane. This surface is solely for visual representation.

The mesh of the FER was appropriately generated and refined in the contact region according to standard engineering practice. Thus, the accuracy of the results of this calculation is deemed acceptable.

The initial drop height of the WP was reduced to 0.01 m before impact and the WP was given an initial velocity equal to 6.86 m/s (see Section 5.4 and Assumption 3.3).

The FER was then used in LS-DYNA V950 to perform the transient dynamic analysis for the 21-PWR Waste Package corner drop.

6. RESULTS

This document may be affected by technical product input information that requires confirmation. Any changes to the document that may occur as a result of completing the confirmation activities will be reflected in subsequent revisions. The status of the input information quality may be confirmed by review of the Document Input Reference System Database.

Attachment III includes the input files and results files that show execution of the programs occurred correctly. The stresses were reported via plots that have been made interactively using the postprocessor LSPOST. The stresses were recorded every 0.001 seconds after impact. The stresses in all components peaked between 0.011 and 0.024 seconds. However, the solution was allowed to reach 0.030 seconds to ensure that all stresses had climaxed.

The results file, d3hsp (Attachment III), lists the calculated masses used by LS-DYNA. The sum of the masses of the WP equals 40,100 *kg*, with the mass of the loaded WP 42,277 *kg* from Section 5.1. However, the top and bottom lids of the inner shell were thinned to 50 *mm*. The change in mass would be to lessen this number by 1,320 *kg*, to 40,957 *kg*. $((1.530\ m)^2 * \pi/4 * 0.900\ m * 7980\ kg/m^2 = 1{,}320\ kg)$ The percent difference in mass would then be ~2.1%. This difference is considered to be negligible.

It should also be noted that an extra section was added. A "Crush Ring" was added in-between the Support Ring and the Inner Shell. This Crush Ring absorbs energy that normally would be transferred to the Inner Shell if it were not present. Thus, it effectively lowers the stresses in the Inner Shell. This Ring is not shown on the drawings in Attachment I since it was added as a result of this calculation. This addition also changes some dimensions, which would account for some of the differences in total mass.

The following pages contain figures that show various parts at states of maximum stress. These start on the next page with Figure 2, which shows the maximum stress in the lower trunnion collar at room temperature.

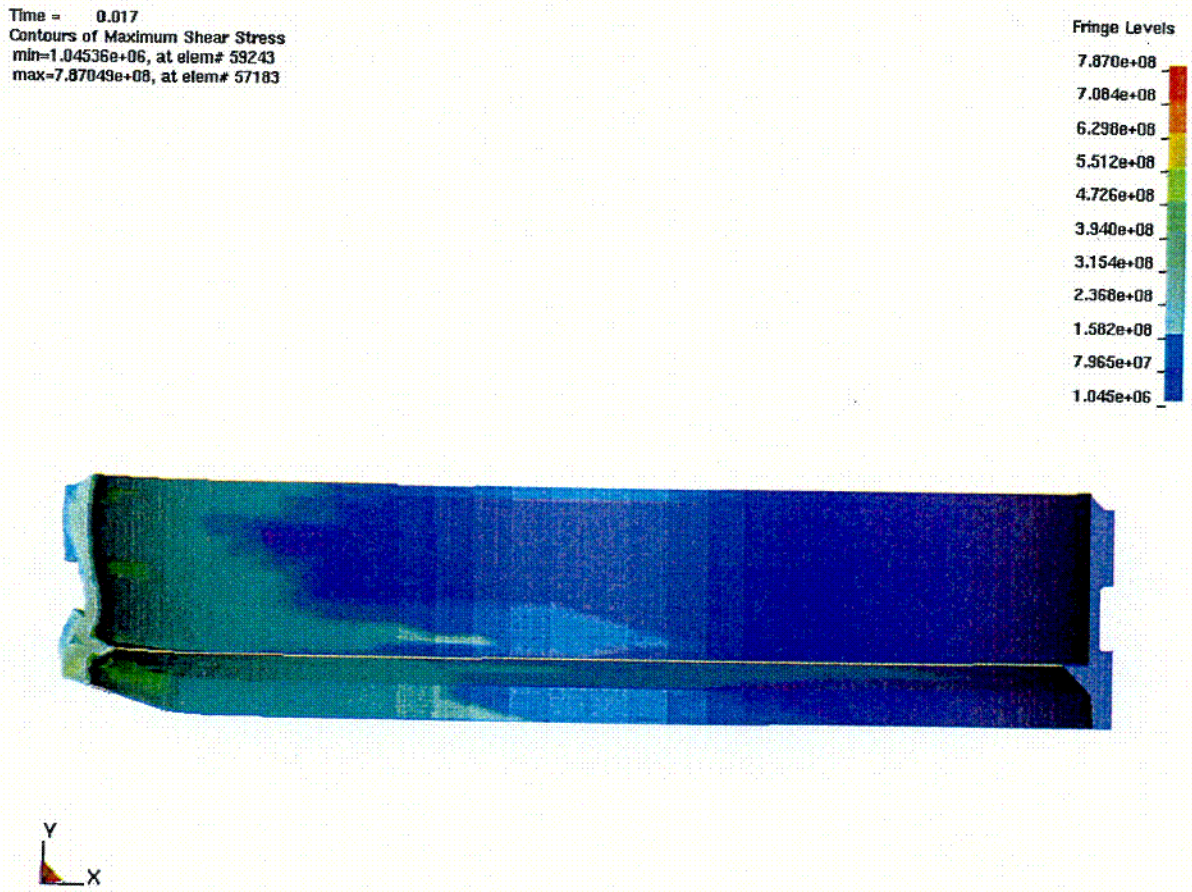

Figure 2. Collar Maximum Stresses at Room Temperature

Figure 2 is a cut away picture. All of the stresses that are reported in the legends of the plots are Tresca Stresses or Maximum Shear Stresses. The units are Pascals. This plot shows that the maximum stresses in the lower trunnion collar are 787 MPa at 0.017 seconds.

Figure 3 may be found on the next page. It shows the maximum stress in the same part, but at 400 degrees Fahrenheit.

C01

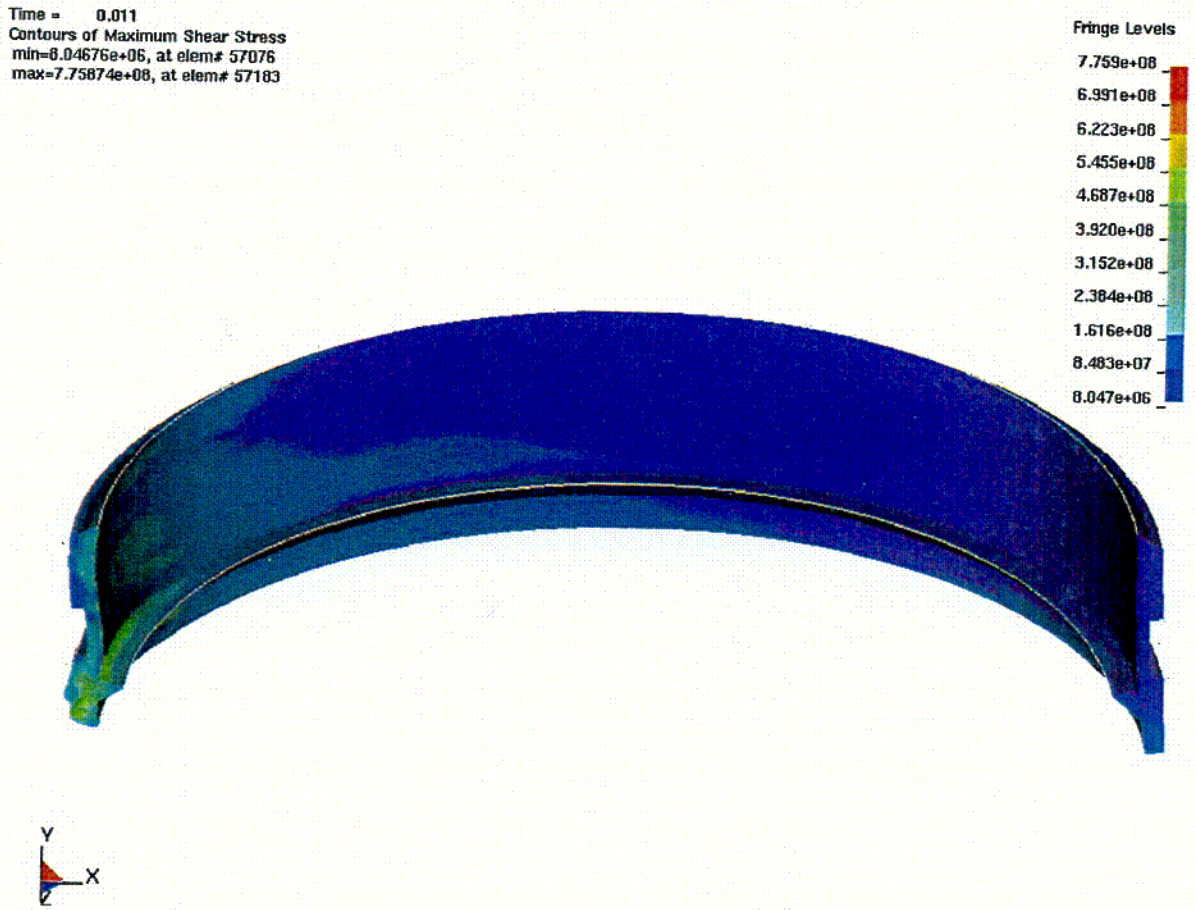

Figure 3. Collar Maximum Stresses at 400 °F

Figure 3 shows that the maximum shear stress in the lower trunnion collar is 776 MPa at 0.011 seconds. This is slightly lower than the room temperature value, which is to be expected.

Figure 4 may be found on the next page. It shows the maximum stress in the same part, but at 600 degrees Fahrenheit.

C02

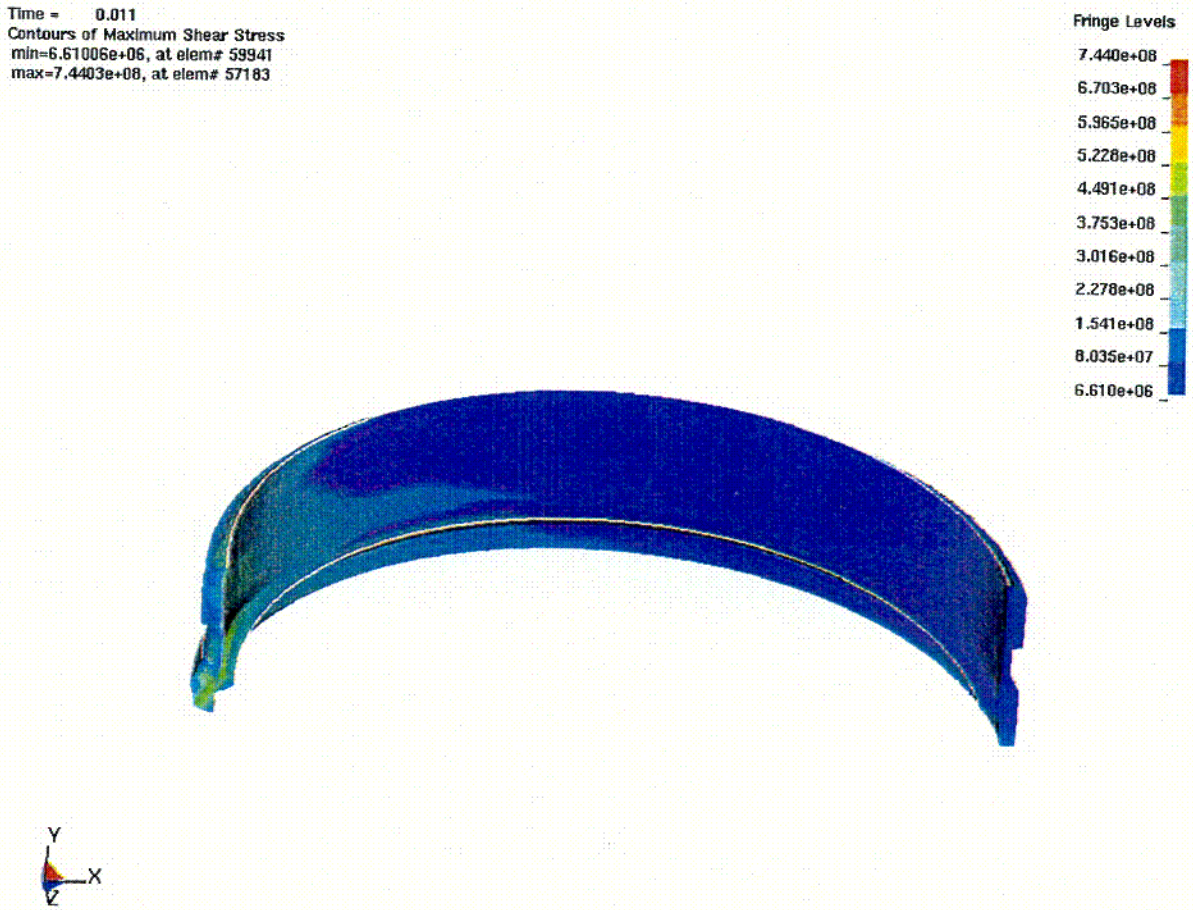

Figure 4. Collar Maximum Stresses at 600 °F

Figure 4 shows that the maximum shear stress in the lower trunnion collar is 744 MPa at 0.011 seconds. This is slightly lower than the 400 °F value, which is to be expected.

Figure 5 may be found on the next page. It shows the maximum stress in the outer shell at room temperature.

C03

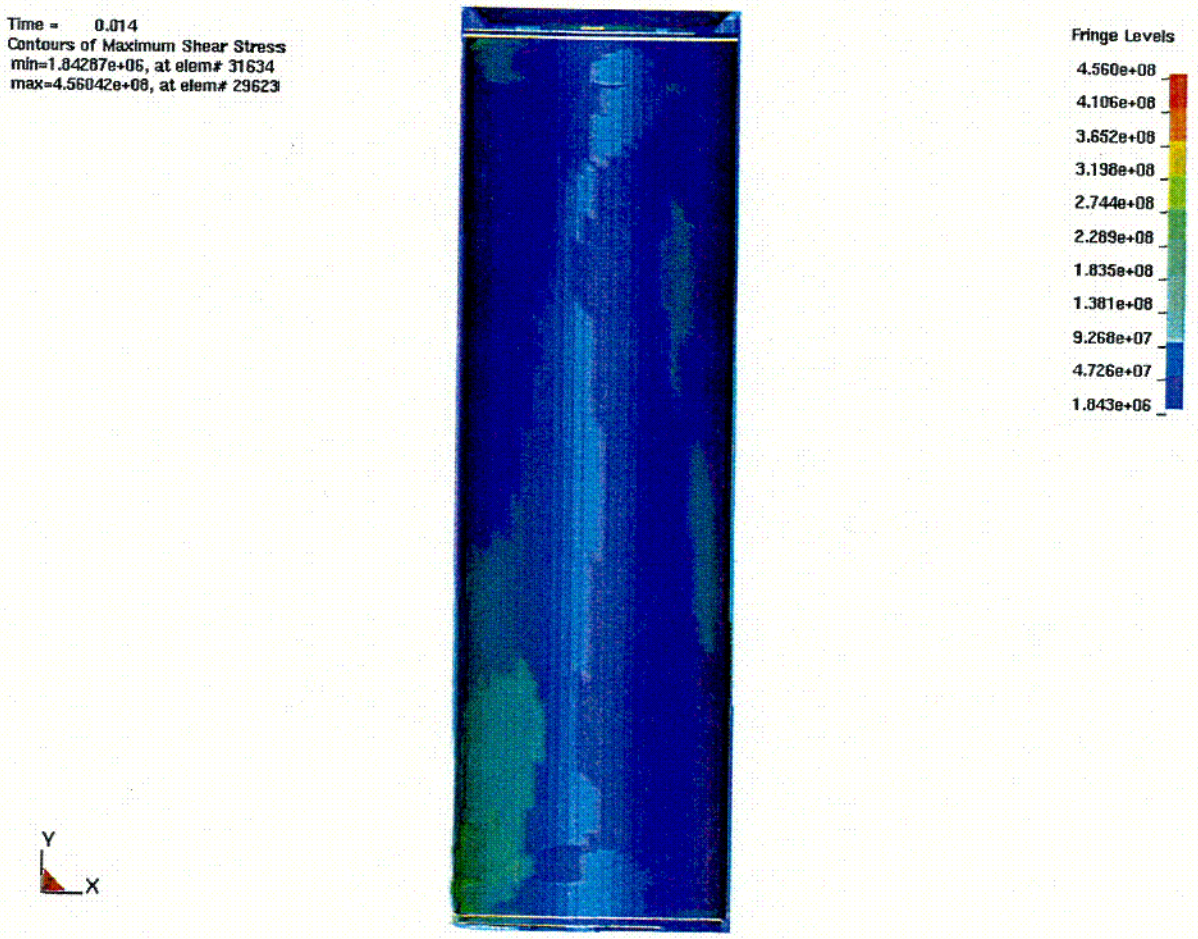

Figure 5. Outer Shell Maximum Stresses at Room Temperature

Figure 5 figure shows that the maximum shear stress in the outer shell is 456 MPa at 0.014 seconds.

Figure 6 may be found on the next page. It shows the maximum stress in the same part, but at 400 degrees Fahrenheit.

C04

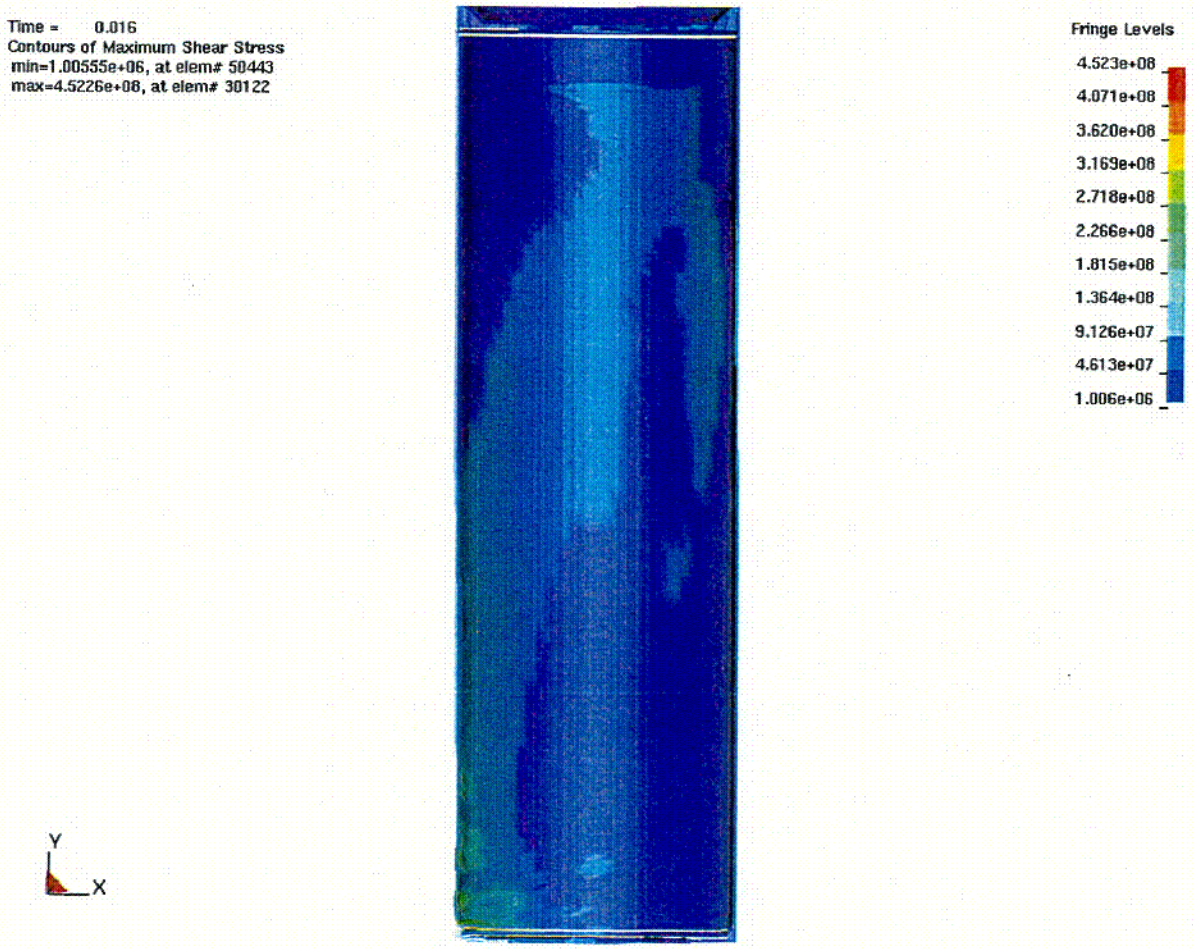

Figure 6. Outer Shell Maximum Stresses at 400 °F

Figure 6 shows that the maximum shear stress in the outer shell is 452 MPa at 0.016 seconds. This is slightly lower than the room temperature value, which is to be expected.

Figure 7 may be found on the next page. It shows the maximum stress in the same part, but at 600 degrees Fahrenheit.

C05

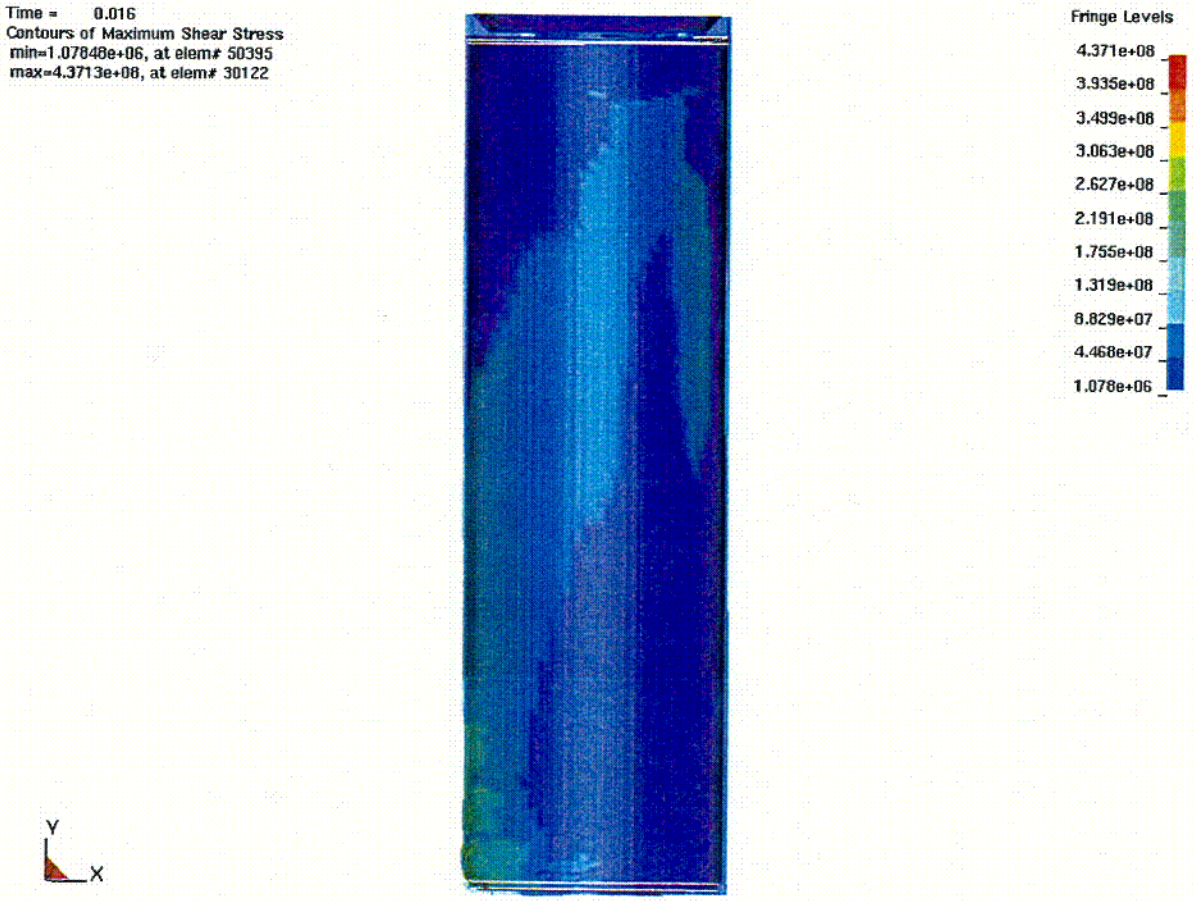

Figure 7. Outer Shell Maximum Stresses at 600 °F

Figure 7 shows that the maximum shear stress in the outer shell is 437 MPa at 0.016 seconds. This is slightly lower than the 400 °F value, which is to be expected.

Figure 8 may be found on the next page. It shows the maximum stress in the crush ring at room temperature.

C06

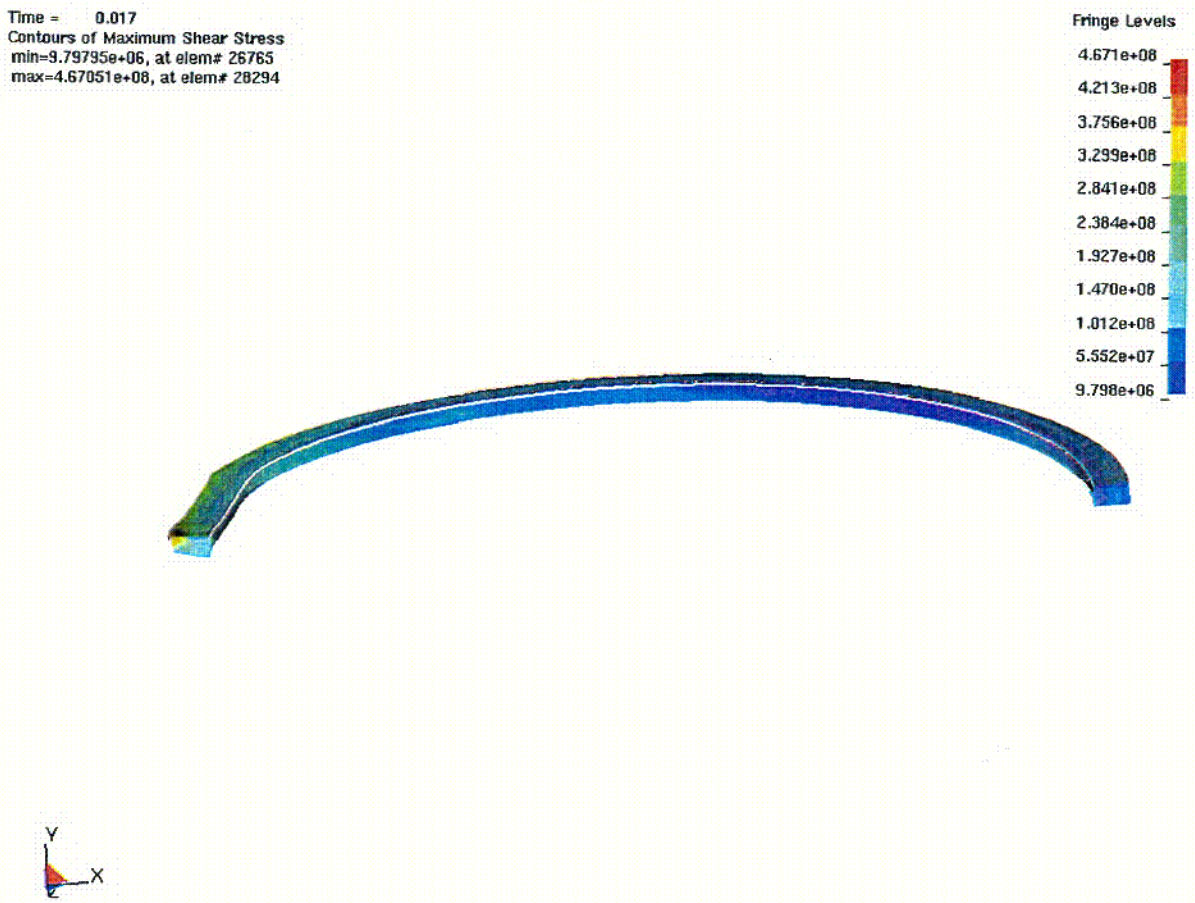

Figure 8. Crush Ring Maximum Stresses at Room Temperature

Figure 8 shows that the maximum shear stress in the crush ring is 467 MPa at 0.017 seconds.

Figure 9 may be found on the next page. It shows the maximum stress in the same part, but at 400 degrees Fahrenheit.

C07

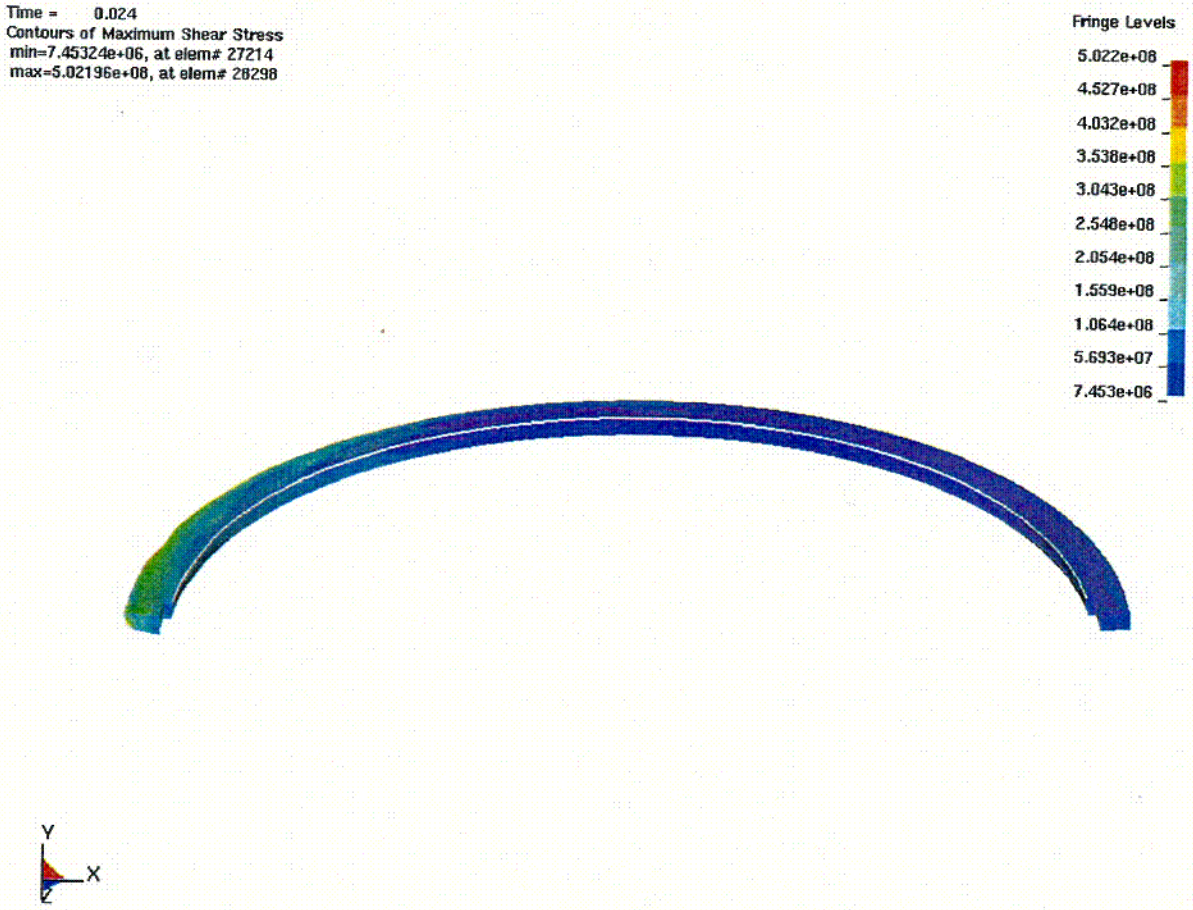

Figure 9. Crush Ring Maximum Stresses at 400 °F

Figure 9 shows that the maximum shear stress in the crush ring is 502 MPa at 0.024 seconds. This is slightly higher than the room temperature value.

Figure 10 may be found on the next page. It shows the maximum stress in the same part, but at 600 degrees Fahrenheit.

C08

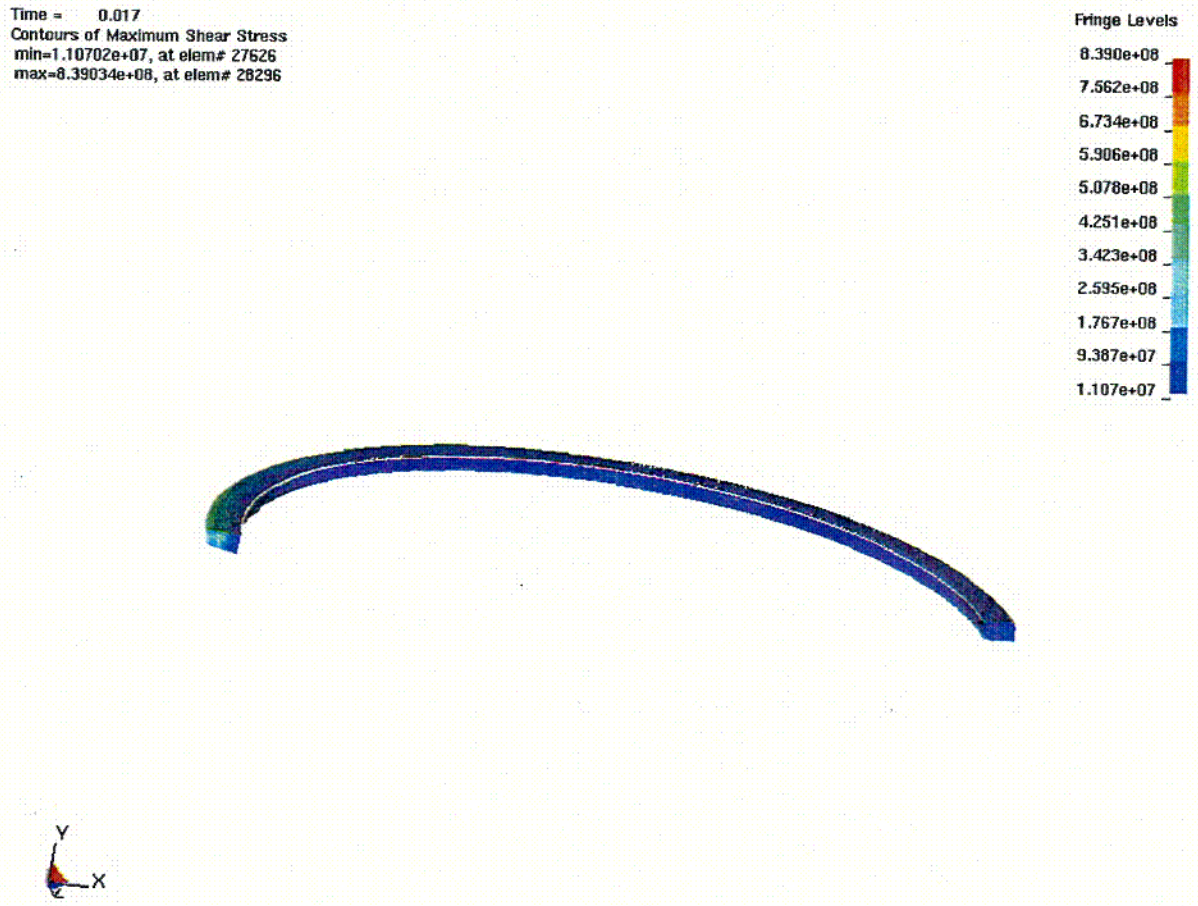

Figure 10. Crush Ring Maximum Stresses at 600 °F

Figure 10 shows that the maximum shear stress in the crush ring is 839 MPa at 0.017 seconds. This is significantly higher than the 400 °F value.

Figure 11 may be found on the next page. It shows the maximum stress in the inner shell at room temperature.

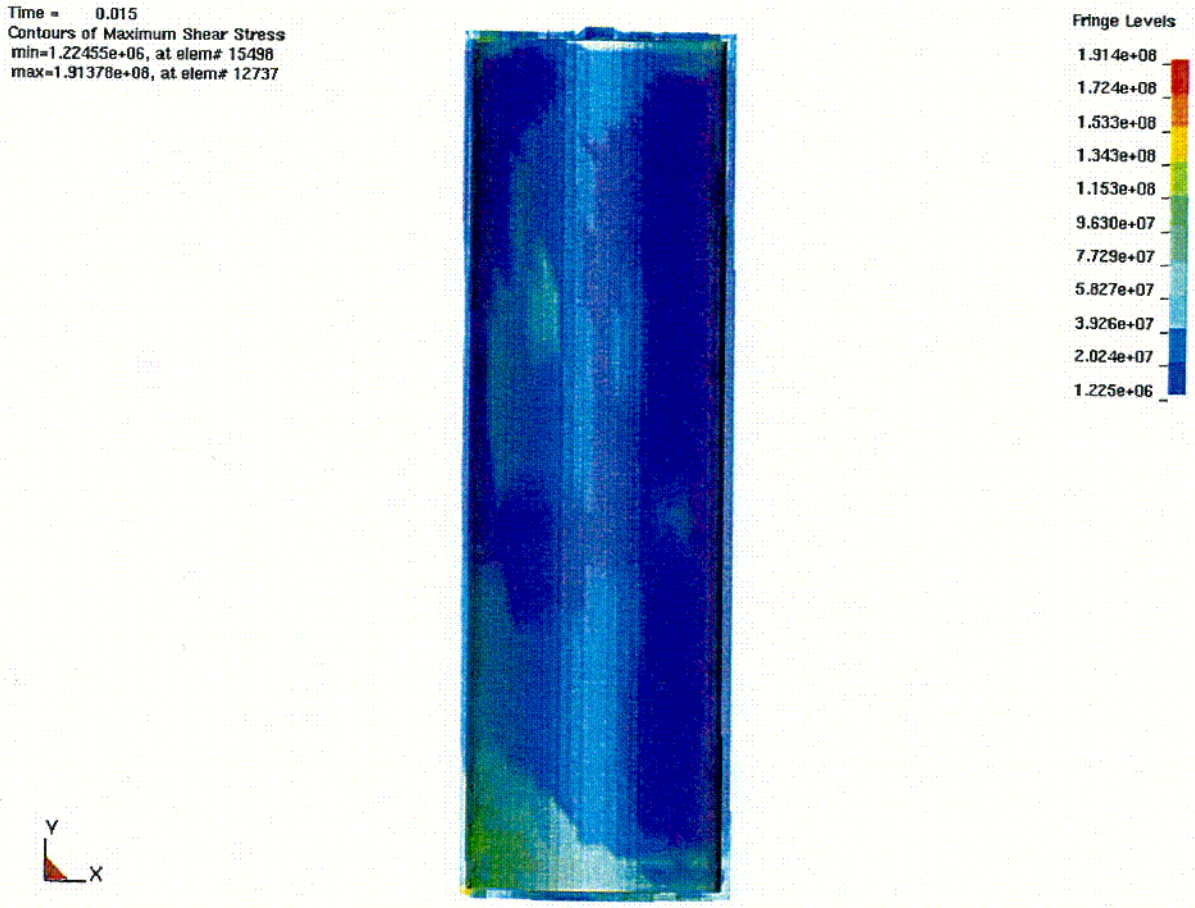

Figure 11. Inner Shell Maximum Stresses at Room Temperature

Figure 11 shows that the maximum shear stress in the inner shell is 191 MPa at 0.015 seconds.

Figure 12 may be found on the next page. It shows the maximum stress in the same part, but at 400 degrees Fahrenheit.

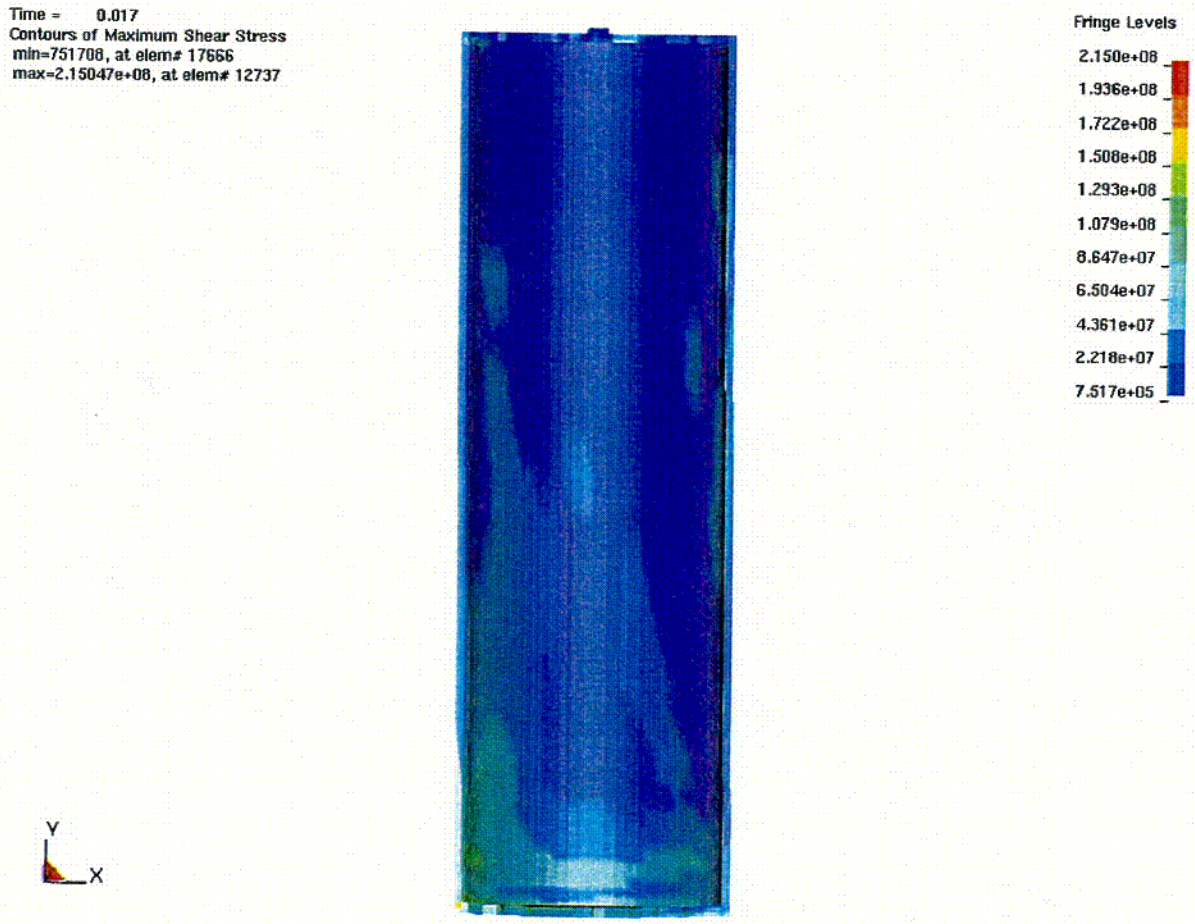

Figure 12. Inner Shell Maximum Stresses at 400 °F

Figure 12 shows that the maximum shear stress in the inner shell is 215 MPa at 0.017 seconds. This is slightly higher than the room temperature value, which is to be expected due to 316NG SS elongation properties at elevated temperatures.

Figure 13 may be found on the next page. It shows the maximum stress in the same part, but at 400 degrees Fahrenheit.

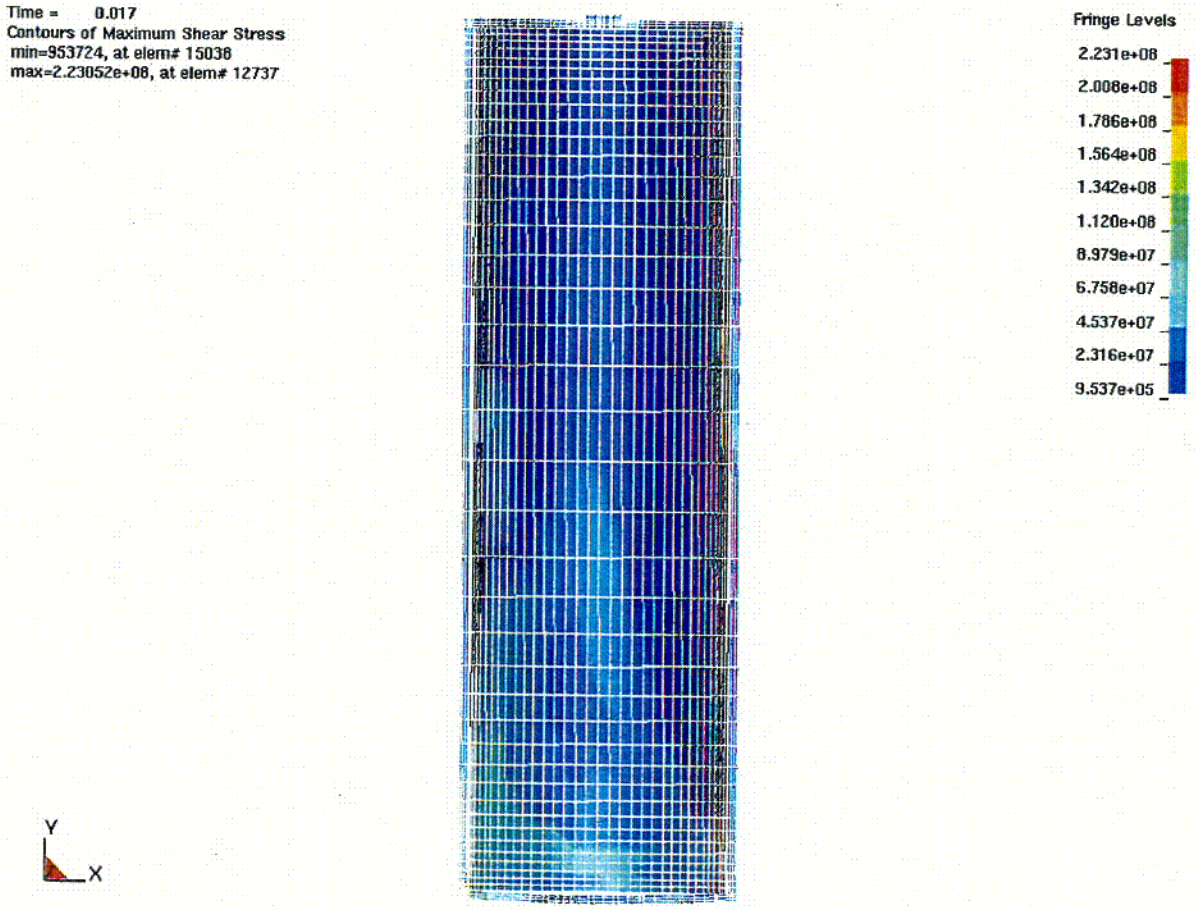

Figure 13. Inner Shell Maximum Stresses at 600 °F

Figure 13 shows that the maximum shear stress in the inner shell is 223 MPa at 0.017 seconds. This is slightly higher than the 400 °F value, which is to be expected due to 316NG SS elongation properties at elevated temperatures.

7. REFERENCES

1. CRWMS M&O 1999. *Uncanistered Spent Nuclear Fuel Disposal Container System Description Document.* SDD-UDC-SE-000001 REV 01. Las Vegas, Nevada: CRWMS M&O. ACC: MOL.20000822.0004.

2. ASME (American Society of Mechanical Engineers) 1995. "Materials." Section II of *1995 ASME Boiler and Pressure Vessel Code.* New York, New York: American Society of Mechanical Engineers. TIC: 245287.

3. ASM International 1990. *Properties and Selection: Irons, Steels, and High-Performance Alloys.* Volume 1 of *Metals Handbook.* 10th Edition. Materials Park, Ohio: ASM International. TIC: 245666.

4. CRWMS M&O 2000. *Waste Package Operations Fabrication Process Report.* TDR-EBS-ND-000003 REV 01. Las Vegas, Nevada: CRWMS M&O. ACC: MOL.20000927.0002.

5. Doering, T.W. 1998. "Qualification of ANSYS V5.4 on the WPO HP UNIX Workstations." Interoffice correspondence from T.W. Doering (CRWMS M&O) to G. Carlisle, May 22, 1998, LV.WP.SMB.05/98-100. ACC: MOL.19980730.0147.

6. Haynes International 1997. *Hastelloy C-22 Alloy.* Kokomo, Indiana: Haynes International. TIC: 238121.

7. CRWMS M&O 2000. *Software Code: LSTC LS-DYNA.* V950. HP 9000. 10300-950-00. URN-0368

8. CRWMS M&O 1998. *Software Qualification Report for ANSYS V5.4, A Finite Element Code.* CSCI: 30040 V5.4. DI: 30040-2003, Rev. 00. Las Vegas, Nevada: CRWMS M&O. ACC: MOL.19980609.0847.

9. AP-SI.1Q, Rev. 2, ICN 4, ECN 1. *Software Management.* Washington, D.C.: U.S. Department of Energy, Office of Civilian Radioactive Waste Management. ACC: MOL.20001019.0023.

10. AP-SV.1Q, Rev. 0, ICN 2. *Control of the Electronic Management of Information.* Washington, D.C.: U.S. Department of Energy, Office of Civilian Radioactive Waste Management. ACC: MOL. 20000831.0065.

11. AP-3.12Q, Rev. 0, ICN 3. *Calculations.* Washington, D.C.: U.S. Department of Energy, Office of Civilian Radioactive Waste Management. ACC: MOL.20001026.0084.

12. CRWMS M&O 2000. *Stress-Strain-Curve Character for Alloy 22 and 316 Stainless Steel.* Input Transmittal 00384.T. Las Vegas, Nevada: CRWMS M&O. ACC: MOL.20001013.0053.

13. American Society for Metals 1980. *Properties and Selection: Stainless Steels, Tool Materials and Special-Purpose Metals.* Volume 3 of *Metals Handbook.* 9th Edition. Metals Park, Ohio: American Society for Metals. TIC: 209801.

14. ASTM G 1-90 (Reapproved 1999). 1990. *Standard Practice for Preparing, Cleaning, and Evaluating Corrosion Test Specimens.* West Conshohocken, Pennsylvania: American Society for Testing and Materials. TIC: 238771.

15. CRWMS M&O 1997. *Waste Container Cavity Size Determination.* BBAA00000-01717-0200-00026 REV 00. Las Vegas, Nevada: CRWMS M&O. ACC: MOL.19980106.0061.

16. CRWMS M&O 2000. *TDP for Corner Drop of 21-PWR Waste Package.* Development Plan TDP-UDC-ME-000008 REV 00. Las Vegas, Nevada: CRWMS M&O. ACC: MOL.20000626.0022.

17. CRWMS M&O 2000. Process Control Evaluation for Supplement V: "CAL-UDC-ME-000008 R00, Corner Drop of 21-PWR Waste Package (Replaces MOL.20000705.0048)". Las Vegas, Nevada: CRWMS M&O. ACC: MOL.20000824.0326.

18. Allegheny Ludlum. 1987. Technical Data Blue Sheet for Stainless Steels Chromium-Nickel-Molybdenum, Types 316, 316L, 317, and 317L. Pittsburgh, Pennsylvania: Allegheny Ludlum Corporation. TIC: 240370.

19. Pasupathi, V. 1999. "Waste Package Structural Material" Interoffice correspondence from V. Pasupathi (CRWMS M&O) to T. W. Doering, May 7, 1999, LV. WP. VP. 05/99-073. ACC: MOL.19990518.0316.

8. ATTACHMENTS

Attachment I (3 pages): Design sketches (*21-PWR Waste Package Configurations for Site Recommendation* [SK-0175 REV 02, two sheets], and *21-PWR Waste Package Weld Configuration* [SK-0191 REV 00])

Attachment II (37 pages): Structural component masses of 21-PWR Waste Package

Attachment III (on compact disc): contains electronic files (see Table 8-1 for a complete list). Cdrop.inp is used by ANSYS to create the *.inc files, the *.k files are input files for LS-DYNA at the three temperatures and they call the *.inc files. The d3hsp files are the LS-DYNA output files at the three temperatures.

Table 8-1 provides a list of attachments submitted in the form of electronic files (compact disc) in Attachment III.

Table 8-1. List of Attachments Submitted in the Form of Electronic Files in Attachment III

Description	Date	Time	Size
Cdrop.inp	10/20/2000	11:05 am	19 KB
d3hspt1	10/20/2000	11:12 am	20,016 KB
d3hspt2	10/20/2000	11:02 am	20,002 KB
d3hspt3	10/20/2000	11:14 am	19,993 KB
elist.inc	10/20/2000	11:05 am	5,208 KB
nlist.inc	10/20/2000	11:06 am	4,969 KB
nlistdis.inc	10/20/2000	11:06 am	2 KB
t1.k	10/20/2000	11:12 am	2 KB
t2.k	10/20/2000	11:05 am	2 KB
t3.k	10/20/2000	11:13 am	2 KB

NOTE: The file sizes may vary with operating system.

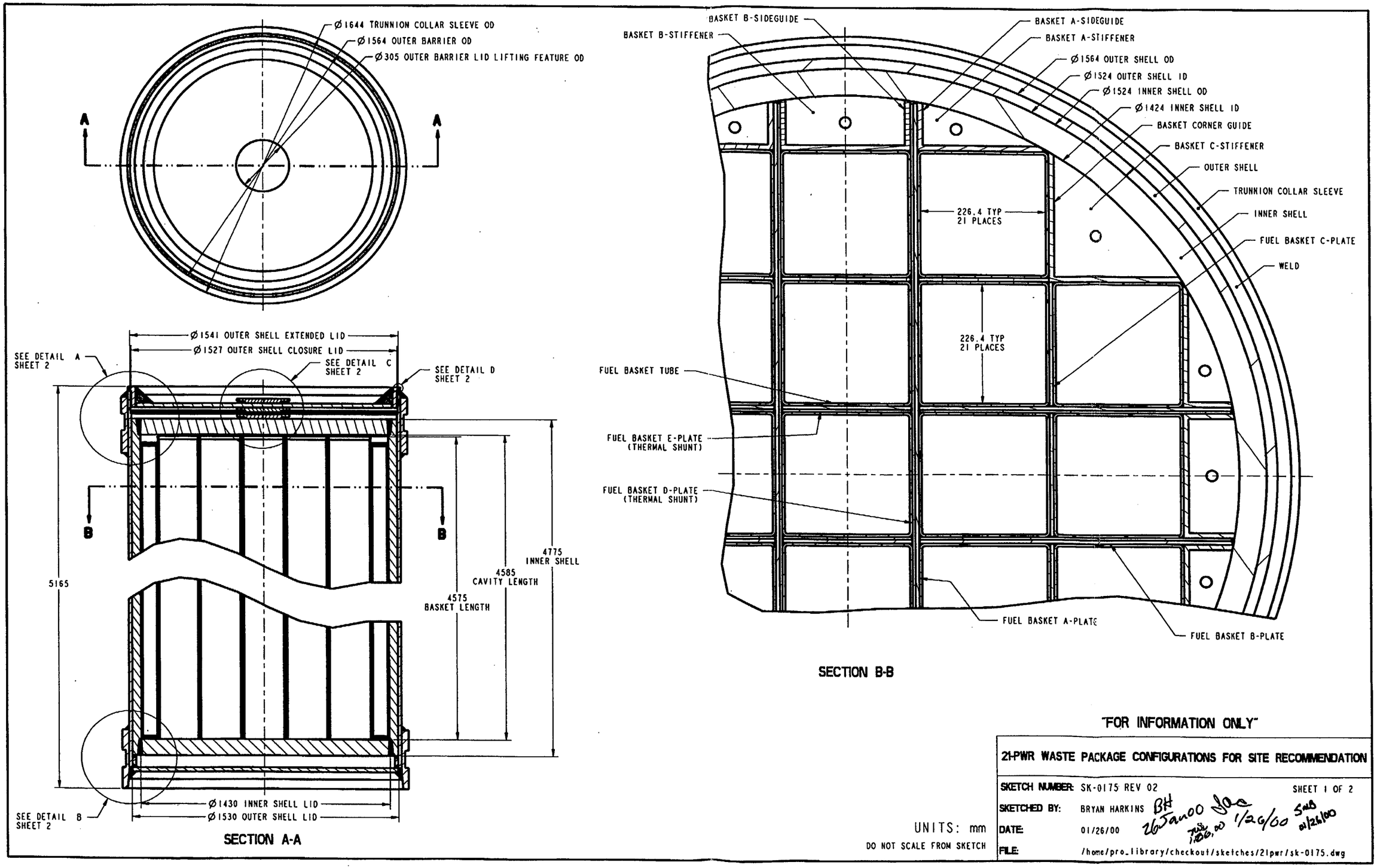
Ø1644 TRUNNION COLLAR SLEEVE OD
Ø1564 OUTER BARRIER OD
Ø305 OUTER BARRIER LID LIFTING FEATURE OD
A
A
Ø1541 OUTER SHELL EXTENDED LID
Ø1527 OUTER SHELL CLOSURE LID
SEE DETAIL A SHEET 2
SEE DETAIL C SHEET 2
SEE DETAIL D SHEET 2
B
B
5165
4775 INNER SHELL
4585 CAVITY LENGTH
4575 BASKET LENGTH
Ø1430 INNER SHELL LID
Ø1530 OUTER SHELL LID
SEE DETAIL B SHEET 2
SECTION A-A
BASKET B-SIDEGUIDE
BASKET B-STIFFENER
BASKET A-SIDEGUIDE
BASKET A-STIFFENER
Ø1564 OUTER SHELL OD
Ø1524 OUTER SHELL ID
Ø1524 INNER SHELL OD
Ø1424 INNER SHELL ID
BASKET CORNER GUIDE
BASKET C-STIFFENER
OUTER SHELL
TRUNNION COLLAR SLEEVE
INNER SHELL
FUEL BASKET C-PLATE
WELD
226.4 TYP 21 PLACES
226.4 TYP 21 PLACES
FUEL BASKET TUBE
FUEL BASKET E-PLATE (THERMAL SHUNT)
FUEL BASKET D-PLATE (THERMAL SHUNT)
FUEL BASKET A-PLATE
FUEL BASKET B-PLATE
SECTION B-B
"FOR INFORMATION ONLY"
21-PWR WASTE PACKAGE CONFIGURATIONS FOR SITE RECOMMENDATION
SKETCH NUMBER: SK-0175 REV 02
SHEET 1 OF 2
SKETCHED BY: BRYAN HARKINS
DATE: 01/26/00
FILE: /home/pro_library/checkout/sketches/21pwr/sk-0175.dwg
UNITS: mm
DO NOT SCALE FROM SKETCH

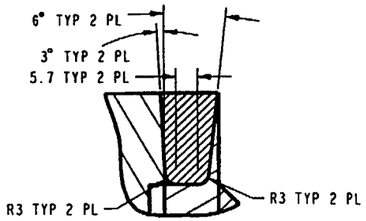

DETAIL D

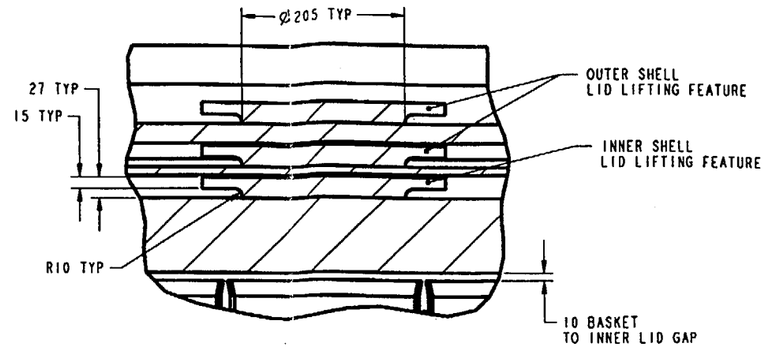

DETAIL C

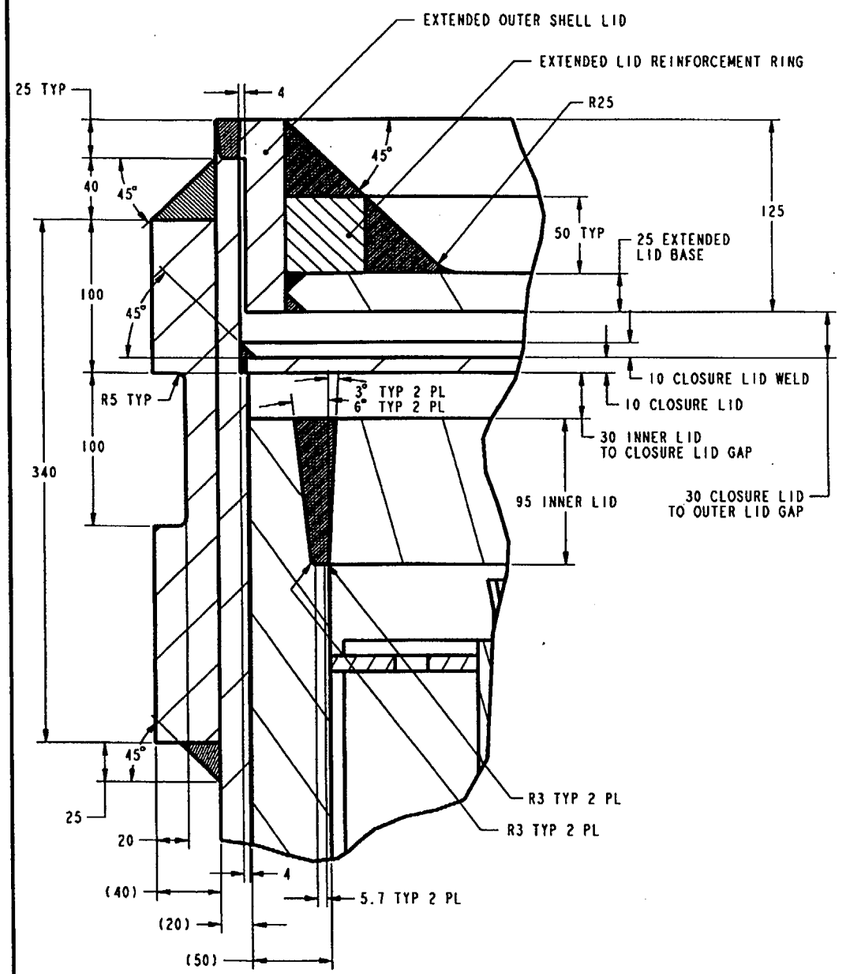

DETAIL A

21-PWR WASTE PACKAGE ASSEMBLY WITH STAINLESS STEEL/BORON PLATES

21-PWR CONTROL ROD WASTE PACKAGE ASSEMBLY WITH CARBON STEEL PLATES

COMPONENT NAME	MATERIAL	THICKNESS	MASS (KG)	QTY ROD
BASKET A-SIDEGUIDE	SA-516 K02700	10	27	32
BASKET A-STIFFENER	SA-516 K02700	10	0.72	64
BASKET B-SIDEGUIDE	SA-516 K02700	10	36	16
BASKET B-STIFFENER	SA-516 K02700	10	1.5	32
BASKET C-STIFFENER	SA-516 K02700	10	2.3	32
BASKET CORNERGUIDE	SA-516 K02700	10	42	16
FUEL BASKET A-PLATE	NEUTRONIT A 978	7	85	8
	#SA-516 K02700	#7	#86	#8
FUEL BASKET B-PLATE	NEUTRONIT A 978	7	85	8
	#SA-516 K02700	#7	#86	#8
FUEL BASKET C-PLATE	NEUTRONIT A 978	7	44	16
	#SA-516 K02700	#7	#45	#16
FUEL BASKET D-PLATE	SB-209 A96061 T4	5	21	8
FUEL BASKET E-PLATE	SB-209 A96061 T4	5	21	8
FUEL BASKET TUBE	SA-516 K02700	5	164	21
INNER SHELL	SA-240 S31600	50	8709	1
INNER SHELL LID	SA-240 S31600	95	1200	2
INNER LID LIFTING FEATURE	SA-240 S31600	27	12	1
OUTER SHELL	SB-575 N06022	20	4193	1
EXTENDED OUTER SHELL LID	SB-575 N06022	25	132	1
EXTENDED OUTER SHELL LID BASE	SB-575 N06022	25	366	1
OUTER LID LIFTING FEATURE	SB-575 N06022	27	13	2
EXTENDED LID REINFORCEMENT RING	SB-575 N06022	50	97	1
OUTER SHELL FLAT CLOSURE LID	SB-575 N06022	10	159	1
OUTER SHELL FLAT BOTTOM LID	SB-575 N0-6022	25	396	1
UPPER TRUNNION COLLAR SLEEVE	SB-575 N06022	40	507	1
LOWER TRUNNION COLLAR SLEEVE	SB-575 N06022	40	497	1
INNER SHELL SUPPORT RING	SB-575 N06022	20	41	1
TOTAL ALLOY 22 WELDS	SFA-5.14 N06022	-	249	**
TOTAL 316 WELDS	SFA-5.9 S31680	-	128	**
WASTE PACKAGE ASSEMBLY	-	-	26035	1
	-	-	#26059	#1
PWR FUEL ASSEMBLY	-	-	773.4*	21
WP ASSEMBLY WITH SNF	-	-	42277	1
	-	-	#42301	#1

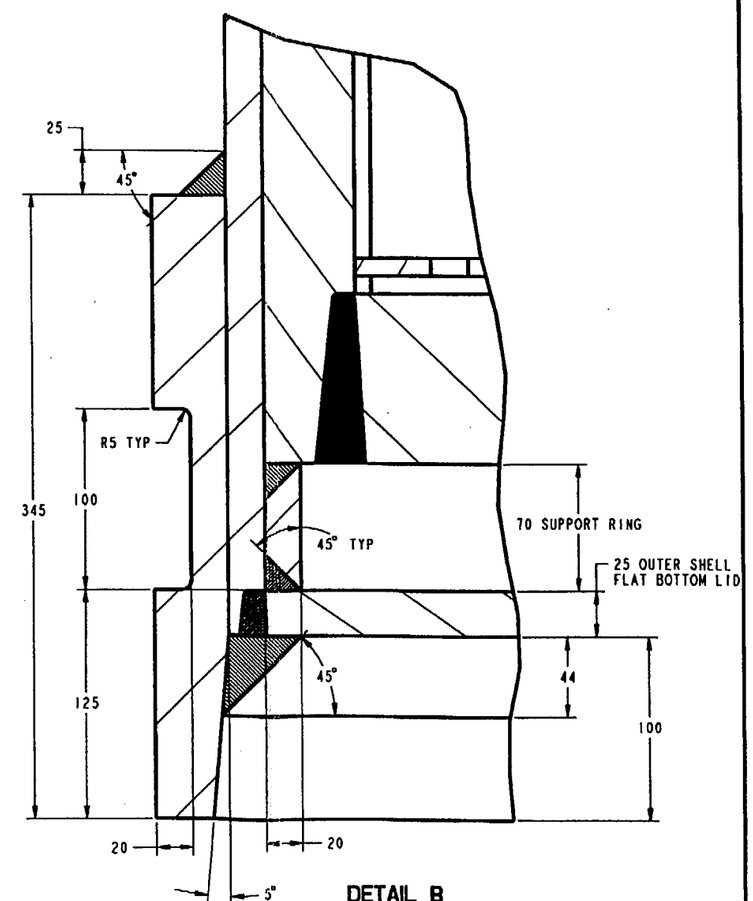

DETAIL B

* CRWMS M&O 1997. WASTE CONTAINER CAVITY SIZE DETERMINATION. BBAA00000-01717-0200-00026 REV 00. LAS VEGAS, NV: CRWMS M&O. ACC: MOL.19980106.0061

** REFER TO SK-0191 REV 00 "21-PWR WASTE PACKAGE WELD CONFIGURATION"

02 SMB 01/27/00

SK-0175 REV ~~01~~ | SHEET 2 OF 2

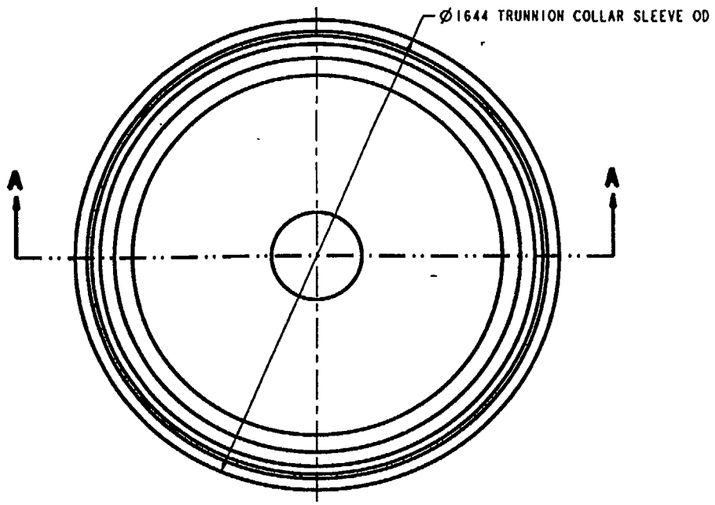

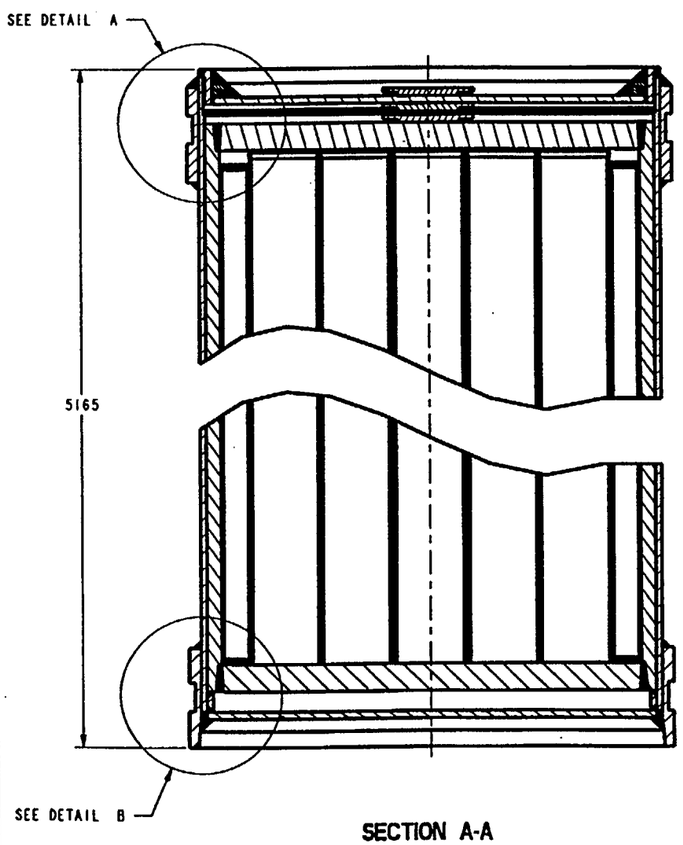

SECTION A-A

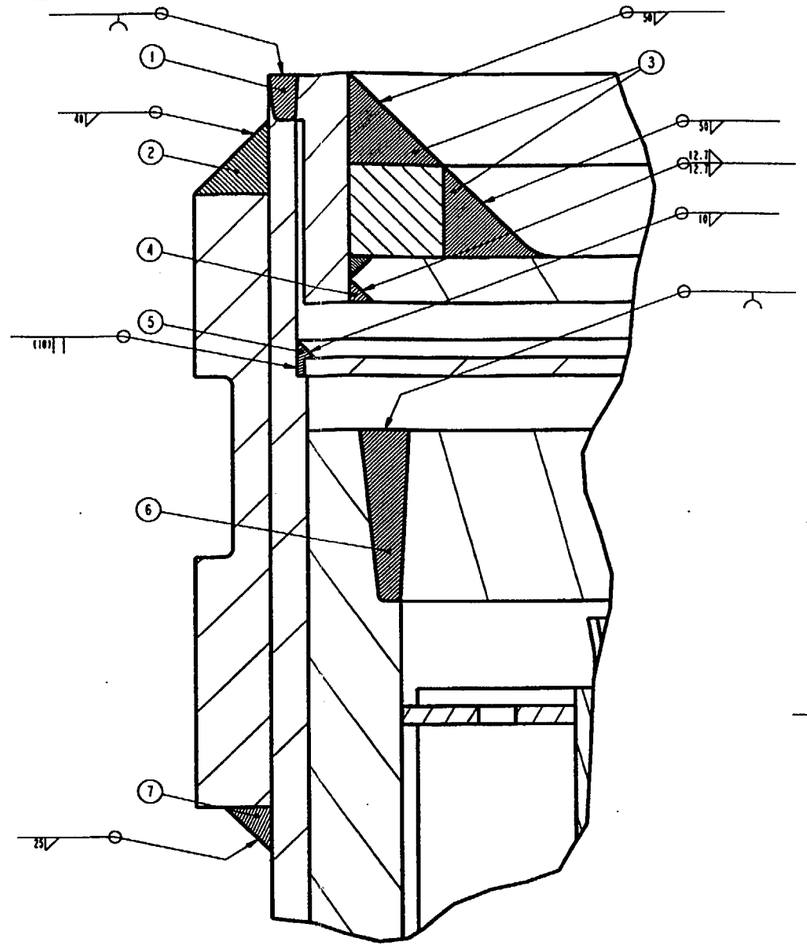

DETAIL A

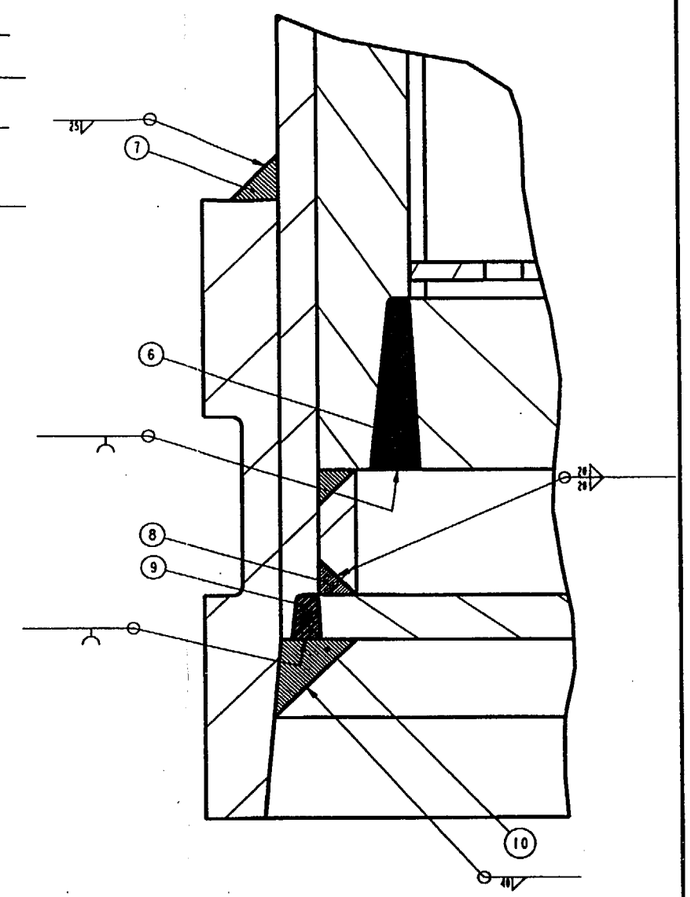

DETAIL B

WELD	MATERIAL	MASS (KG)	QTY ROD
1	SFA-5.14 N06022	14	1
2	SFA-5.14 N06022	35	1
3	SFA-5.14 N06022	96	1
4	SFA-5.14 N06022	3.1	2
5	SFA-5.14 N06022	3.8	1
6	SFA-5.9 S31680	64	2
7	SFA-5.14 N06022	13	2
8	SFA-5.14 N06022	8.2	2
9	SFA-5.14 N06022	14	1
10	SFA-5.14 N06022	37	1
TOTAL ALLOY 22 WELDS	SFA-5.14 N06022	249	-
TOTAL 316 WELDS	SFA-5.9 S31680	128	-

UNITS: mm

DO NOT SCALE FROM SKETCH

REVISIONS			
REV	DESCRIPTION	DRW BY	DATE
00	ISSUED APPROVED	BH	03/09/00

"FOR INFORMATION ONLY"

21-PWR WASTE PACKAGE WELD CONFIGURATION

SKETCH NUMBER: SK-0191 REV 00

SKETCHED BY: BRYAN HARKINS BH 13March00

DATE: 03/09/00 SMB 03/13/00 JOC 3/13/00 TGB 3/13/00

FILE: /home/pro_library/checkout/sketches/21pwr/sk-0191.dwg

Mass Properties of 21-PWR Waste Package

```
                    MASS PROPERTIES OF THE PART BASKET_A-SIDEGUIDE

                          VOLUME =  3.4753882e+06 MM^3
                    SURFACE AREA =  7.3523579e+05 MM^2
                         DENSITY =  7.8500000e-06 KILOGRAM / MM^3
                            MASS =  2.7281797e+01 KILOGRAM

      CENTER OF GRAVITY with respect to _BASKET_A-SIDEGUI coordinate frame:
X   Y   Z            8.5938722e+01 -1.6350460e+01 -5.6700000e+02  MM

 INERTIA with respect to _BASKET_A-SIDEGUI coordinate frame:  (KILOGRAM * MM^2)

INERTIA TENSOR:
Ixx Ixy Ixz          1.1715760e+07  1.2976277e+04  1.3293671e+06
Iyx Iyy Iyz          1.2976277e+04  1.2045633e+07 -2.5292165e+05
Izx Izy Izz          1.3293671e+06 -2.5292165e+05  3.7259956e+05

INERTIA at CENTER OF GRAVITY with respect to _BASKET_A-SIDEGUI coordinate frame:
                                                              (KILOGRAM * MM^2)

INERTIA TENSOR:
Ixx Ixy Ixz          2.9376691e+06 -2.5358403e+04  0.0000000e+00
Iyx Iyy Iyz         -2.5358403e+04  3.0733468e+06  0.0000000e+00
Izx Izy Izz          0.0000000e+00  0.0000000e+00  1.6381739e+05

                 PRINCIPAL MOMENTS OF INERTIA:  (KILOGRAM * MM^2)
I1  I2  I3           1.6381739e+05  2.9330845e+06  3.0779314e+06

      ROTATION MATRIX from _BASKET_A-SIDEGUI orientation to PRINCIPAL AXES:
                        0.00000        0.98405       -0.17791
                        0.00000        0.17791        0.98405
                        1.00000        0.00000        0.00000

 ROTATION ANGLES from _BASKET_A-SIDEGUI orientation to PRINCIPAL AXES (degrees):
angles about x  y  z  -90.000        -10.248        -90.000

                 RADII OF GYRATION with respect to PRINCIPAL AXES:
R1  R2  R3           7.7489615e+01  3.2788821e+02  3.3588683e+02  MM
```

Mass Properties of 21-PWR Waste Package

```
                    MASS PROPERTIES OF THE PART BASKET_A-STIFFENER

                          VOLUME =  9.1313467e+04 MM^3
                    SURFACE AREA =  2.4001708e+04 MM^2
                         DENSITY =  7.8500000e-06 KILOGRAM / MM^3
                            MASS =  7.1681071e-01 KILOGRAM

      CENTER OF GRAVITY with respect to _BASKET_A-STIFFEN coordinate frame:
X   Y   Z           7.5253541e+01 -2.8116037e+01 -5.0000000e+00  MM

 INERTIA with respect to _BASKET_A-STIFFEN coordinate frame:  (KILOGRAM * MM^2)

INERTIA TENSOR:
Ixx Ixy Ixz         8.5943796e+02  1.1971725e+03  2.6971272e+02
Iyx Iyy Iyz         1.1971725e+03  5.9707674e+03 -1.0076938e+02
Izx Izy Izz         2.6971272e+02 -1.0076938e+02  6.7824180e+03

INERTIA at CENTER OF GRAVITY with respect to _BASKET_A-STIFFEN coordinate frame:
                                                              (KILOGRAM * MM^2)
INERTIA TENSOR:
Ixx Ixy Ixz         2.7487057e+02 -3.1947807e+02  0.0000000e+00
Iyx Iyy Iyz        -3.1947807e+02  1.8934797e+03  0.0000000e+00
Izx Izy Izz         0.0000000e+00  0.0000000e+00  2.1564034e+03

                PRINCIPAL MOMENTS OF INERTIA:  (KILOGRAM * MM^2)
I1  I2  I3          2.1409461e+02  1.9542557e+03  2.1564034e+03

      ROTATION MATRIX from _BASKET_A-STIFFEN orientation to PRINCIPAL AXES:
                        0.98238       -0.18688        0.00000
                        0.18688        0.98238        0.00000
                        0.00000        0.00000        1.00000

 ROTATION ANGLES from _BASKET_A-STIFFEN orientation to PRINCIPAL AXES (degrees):
angles about x  y  z    0.000          0.000          10.771

                RADII OF GYRATION with respect to PRINCIPAL AXES:
R1  R2  R3          1.7282263e+01  5.2214178e+01  5.4848248e+01  MM
```

Mass Properties of 21-PWR Waste Package

```
                    MASS PROPERTIES OF THE PART BASKET_B-SIDEGUIDE

                          VOLUME =  4.5543272e+06 MM^3
                    SURFACE AREA =  9.4186047e+05 MM^2
                         DENSITY =  7.8500000e-06 KILOGRAM / MM^3
                            MASS =  3.5751469e+01 KILOGRAM

      CENTER OF GRAVITY with respect to _BASKET_B-SIDEGUI coordinate frame:
X   Y   Z          -1.1820000e+02  2.4048996e+01 -5.6700000e+02  MM

 INERTIA with respect to _BASKET_B-SIDEGUI coordinate frame:  (KILOGRAM * MM^2)

INERTIA TENSOR:
Ixx Ixy Ixz         1.5372718e+07  1.0162681e+05 -2.3960420e+06
Iyx Iyy Iyz         1.0162681e+05  1.6110968e+07  4.8749918e+05
Izx Izy Izz        -2.3960420e+06  4.8749918e+05  8.3380956e+05

INERTIA at CENTER OF GRAVITY with respect to _BASKET_B-SIDEGUI coordinate frame:
                                                              (KILOGRAM * MM^2)
INERTIA TENSOR:
Ixx Ixy Ixz         3.8583376e+06  0.0000000e+00  0.0000000e+00
Iyx Iyy Iyz         0.0000000e+00  4.1177719e+06  0.0000000e+00
Izx Izy Izz         0.0000000e+00  0.0000000e+00  3.1364020e+05

                PRINCIPAL MOMENTS OF INERTIA:  (KILOGRAM * MM^2)
I1  I2  I3          3.1364020e+05  3.8583376e+06  4.1177719e+06

      ROTATION MATRIX from _BASKET_B-SIDEGUI orientation to PRINCIPAL AXES:
                        0.00000        1.00000        0.00000
                        0.00000        0.00000        1.00000
                        1.00000        0.00000        0.00000

 ROTATION ANGLES from _BASKET_B-SIDEGUI orientation to PRINCIPAL AXES (degrees):
angles about x  y  z  -90.000          0.000        -90.000

                RADII OF GYRATION with respect to PRINCIPAL AXES:
R1  R2  R3          9.3663185e+01  3.2851346e+02  3.3937840e+02  MM
```

Mass Properties of 21-PWR Waste Package

```
                    MASS PROPERTIES OF THE PART BASKET_B-STIFFENER

                          VOLUME =  1.8928843e+05 MM^3
                    SURFACE AREA =  4.4490432e+04 MM^2
                         DENSITY =  7.8500000e-06 KILOGRAM / MM^3
                            MASS =  1.4859142e+00 KILOGRAM

      CENTER OF GRAVITY with respect to _BASKET_B-STIFFEN coordinate frame:
X   Y   Z            1.0819999e+02 -4.4542218e+01 -5.0000000e+00  MM

 INERTIA with respect to _BASKET_B-STIFFEN coordinate frame:  (KILOGRAM * MM^2)

INERTIA TENSOR:
Ixx Ixy Ixz          3.9967068e+03  7.1613153e+03  8.0387947e+02
Iyx Iyy Iyz          7.1613153e+03  2.3193588e+04 -3.3092956e+02
Izx Izy Izz          8.0387947e+02 -3.3092956e+02  2.7091234e+04

INERTIA at CENTER OF GRAVITY with respect to _BASKET_B-STIFFEN coordinate frame:
                                                                (KILOGRAM * MM^2)
INERTIA TENSOR:
Ixx Ixy Ixz          1.0114917e+03  3.8048525e-04  0.0000000e+00
Iyx Iyy Iyz          3.8048525e-04  5.7604907e+03  0.0000000e+00
Izx Izy Izz          0.0000000e+00  0.0000000e+00  6.7472171e+03

                PRINCIPAL MOMENTS OF INERTIA:  (KILOGRAM * MM^2)
I1  I2  I3           1.0114917e+03  5.7604907e+03  6.7472171e+03

      ROTATION MATRIX from _BASKET_B-STIFFEN orientation to PRINCIPAL AXES:
                        1.00000        0.00000        0.00000
                        0.00000        1.00000        0.00000
                        0.00000        0.00000        1.00000

 ROTATION ANGLES from _BASKET_B-STIFFEN orientation to PRINCIPAL AXES (degrees):
angles about x  y  z    0.000          0.000          0.000

                RADII OF GYRATION with respect to PRINCIPAL AXES:
R1  R2  R3           2.6090614e+01  6.2263406e+01  6.7385349e+01  MM
```

Mass Properties of 21-PWR Waste Package

```
                    MASS PROPERTIES OF THE PART BASKET_C-STIFFENER

                          VOLUME =  2.9466396e+05 MM^3
                    SURFACE AREA =  6.7349278e+04 MM^2
                         DENSITY =  7.8500000e-06 KILOGRAM / MM^3
                            MASS =  2.3131121e+00 KILOGRAM

      CENTER OF GRAVITY with respect to _BASKET_C-STIFFEN coordinate frame:
X   Y   Z            5.7728404e+00  5.7728437e+00  5.0000000e+00  MM

 INERTIA with respect to _BASKET_C-STIFFEN coordinate frame:  (KILOGRAM * MM^2)

INERTIA TENSOR:
Ixx Ixy Ixz          7.2786355e+03  3.1339778e+03 -6.6766136e+01
Iyx Iyy Iyz          3.1339778e+03  7.2786355e+03 -6.6766174e+01
Izx Izy Izz         -6.6766136e+01 -6.6766174e+01  1.4403064e+04

INERTIA at CENTER OF GRAVITY with respect to _BASKET_C-STIFFEN coordinate frame:
                                                              (KILOGRAM * MM^2)
INERTIA TENSOR:
Ixx Ixy Ixz          7.1437216e+03  3.2110639e+03  0.0000000e+00
Iyx Iyy Iyz          3.2110639e+03  7.1437217e+03  0.0000000e+00
Izx Izy Izz          0.0000000e+00  0.0000000e+00  1.4248891e+04

                PRINCIPAL MOMENTS OF INERTIA:  (KILOGRAM * MM^2)
I1  I2  I3           3.9326577e+03  1.0354786e+04  1.4248891e+04

      ROTATION MATRIX from _BASKET_C-STIFFEN orientation to PRINCIPAL AXES:
                        0.70711        0.70711        0.00000
                       -0.70711        0.70711        0.00000
                        0.00000        0.00000        1.00000

 ROTATION ANGLES from _BASKET_C-STIFFEN orientation to PRINCIPAL AXES (degrees):
angles about x  y  z    0.000          0.000        -45.000

                RADII OF GYRATION with respect to PRINCIPAL AXES:
R1  R2  R3           4.1232981e+01  6.6907101e+01  7.8486000e+01  MM
```

Mass Properties of 21-PWR Waste Package

```
                    MASS PROPERTIES OF THE PART CORNERGUIDE

                         VOLUME =  5.3364790e+06 MM^3
                   SURFACE AREA =  1.1033043e+06 MM^2
                        DENSITY =  7.8500000e-06 KILOGRAM / MM^3
                           MASS =  4.1891361e+01 KILOGRAM

        CENTER OF GRAVITY with respect to _CORNERGUIDE coordinate frame:
X   Y   Z           6.3799916e+01  6.3799916e+01  5.6690000e+02  MM

    INERTIA with respect to _CORNERGUIDE coordinate frame:  (KILOGRAM * MM^2)

INERTIA TENSOR:
Ixx Ixy Ixz         1.8363080e+07 -2.5465443e+04 -1.5151339e+06
Iyx Iyy Iyz        -2.5465443e+04  1.8363080e+07 -1.5151339e+06
Izx Izy Izz        -1.5151339e+06 -1.5151339e+06  8.2519577e+05

   INERTIA at CENTER OF GRAVITY with respect to _CORNERGUIDE coordinate frame:
                                                            (KILOGRAM * MM^2)
INERTIA TENSOR:
Ixx Ixy Ixz         4.7297026e+06  1.4505038e+05  0.0000000e+00
Iyx Iyy Iyz         1.4505038e+05  4.7297026e+06  0.0000000e+00
Izx Izy Izz         0.0000000e+00  0.0000000e+00  4.8416413e+05

                PRINCIPAL MOMENTS OF INERTIA:  (KILOGRAM * MM^2)
I1  I2  I3          4.8416413e+05  4.5846522e+06  4.8747530e+06

        ROTATION MATRIX from _CORNERGUIDE orientation to PRINCIPAL AXES:
                       0.00000        0.70711        0.70711
                       0.00000       -0.70711        0.70711
                       1.00000        0.00000        0.00000

   ROTATION ANGLES from _CORNERGUIDE orientation to PRINCIPAL AXES (degrees):
angles about x  y  z  -90.000         45.000        -90.000

                RADII OF GYRATION with respect to PRINCIPAL AXES:
R1  R2  R3          1.0750634e+02  3.3081940e+02  3.4112541e+02  MM
```

Mass Properties of 21-PWR Waste Package

```
                    MASS PROPERTIES OF THE PART A-PLATE

                        VOLUME =  1.0898874e+07 MM^3
                  SURFACE AREA =  3.1811360e+06 MM^2
                       DENSITY =  7.7600000e-06 KILOGRAM / MM^3
                          MASS =  8.4575262e+01 KILOGRAM

          CENTER OF GRAVITY with respect to _A-PLATE coordinate frame:
X   Y   Z           6.9800000e+02  5.7174909e+02  3.5000000e+00  MM

      INERTIA with respect to _A-PLATE coordinate frame:  (KILOGRAM * MM^2)

INERTIA TENSOR:
Ixx Ixy Ixz         3.6710214e+07 -3.3752369e+07 -2.0661737e+05
Iyx Iyy Iyz        -3.3752369e+07  5.5082751e+07 -1.6924540e+05
Izx Izy Izz        -2.0661737e+05 -1.6924540e+05  9.1790202e+07

     INERTIA at CENTER OF GRAVITY with respect to _A-PLATE coordinate frame:
                                                        (KILOGRAM * MM^2)
INERTIA TENSOR:
Ixx Ixy Ixz         9.0617767e+06  0.0000000e+00  0.0000000e+00
Iyx Iyy Iyz         0.0000000e+00  1.3876309e+07  0.0000000e+00
Izx Izy Izz         0.0000000e+00  0.0000000e+00  2.2937395e+07

                PRINCIPAL MOMENTS OF INERTIA:  (KILOGRAM * MM^2)
I1  I2  I3          9.0617767e+06  1.3876309e+07  2.2937395e+07

          ROTATION MATRIX from _A-PLATE orientation to PRINCIPAL AXES:
                      1.00000        0.00000        0.00000
                      0.00000        1.00000        0.00000
                      0.00000        0.00000        1.00000

     ROTATION ANGLES from _A-PLATE orientation to PRINCIPAL AXES (degrees):
angles about x  y  z    0.000          0.000          0.000

                RADII OF GYRATION with respect to PRINCIPAL AXES:
R1  R2  R3          3.2732939e+02  4.0505622e+02  5.2077529e+02  MM
```

Mass Properties of 21-PWR Waste Package

```
                    MASS PROPERTIES OF THE PART B-PLATE

                        VOLUME =  1.0898874e+07 MM^3
                  SURFACE AREA =  3.1811360e+06 MM^2
                       DENSITY =  7.7600000e-06 KILOGRAM / MM^3
                          MASS =  8.4575262e+01 KILOGRAM

          CENTER OF GRAVITY with respect to _B-PLATE coordinate frame:
X   Y   Z           6.9800000e+02 -3.5000000e+00  5.6803241e+02  MM

      INERTIA with respect to _B-PLATE coordinate frame:  (KILOGRAM * MM^2)

INERTIA TENSOR:
Ixx Ixy Ixz         3.6353754e+07  2.0661737e+05 -3.3532960e+07
Iyx Iyy Iyz         2.0661737e+05  9.1433742e+07  1.6814522e+05
Izx Izy Izz        -3.3532960e+07  1.6814522e+05  5.5082751e+07

     INERTIA at CENTER OF GRAVITY with respect to _B-PLATE coordinate frame:
                                                        (KILOGRAM * MM^2)
INERTIA TENSOR:
Ixx Ixy Ixz         9.0635940e+06  0.0000000e+00  0.0000000e+00
Iyx Iyy Iyz         0.0000000e+00  2.2939212e+07  0.0000000e+00
Izx Izy Izz         0.0000000e+00  0.0000000e+00  1.3876309e+07

                PRINCIPAL MOMENTS OF INERTIA:  (KILOGRAM * MM^2)
I1  I2  I3          9.0635940e+06  1.3876309e+07  2.2939212e+07

          ROTATION MATRIX from _B-PLATE orientation to PRINCIPAL AXES:
                      1.00000        0.00000        0.00000
                      0.00000        0.00000       -1.00000
                      0.00000        1.00000        0.00000

     ROTATION ANGLES from _B-PLATE orientation to PRINCIPAL AXES (degrees):
angles about x  y  z   90.000          0.000          0.000

                RADII OF GYRATION with respect to PRINCIPAL AXES:
R1  R2  R3          3.2736221e+02  4.0505622e+02  5.2079592e+02  MM
```

Mass Properties of 21-PWR Waste Package

```
                    MASS PROPERTIES OF THE PART C-PLATE

                         VOLUME =  5.7090096e+06 MM^3
                   SURFACE AREA =  1.6731624e+06 MM^2
                        DENSITY =  7.7600000e-06 KILOGRAM / MM^3
                           MASS =  4.4301914e+01 KILOGRAM

          CENTER OF GRAVITY with respect to _C-PLATE coordinate frame:
X   Y   Z            3.6660584e+02 -3.5000000e+00  5.6148137e+02  MM

      INERTIA with respect to _C-PLATE coordinate frame:  (KILOGRAM * MM^2)

INERTIA TENSOR:
Ixx Ixy Ixz          1.8713581e+07  5.6844692e+04 -9.1192849e+06
Iyx Iyy Iyz          5.6844692e+04  2.6677026e+07  8.7061448e+04
Izx Izy Izz         -9.1192849e+06  8.7061448e+04  7.9648921e+06

     INERTIA at CENTER OF GRAVITY with respect to _C-PLATE coordinate frame:
                                                          (KILOGRAM * MM^2)
INERTIA TENSOR:
Ixx Ixy Ixz          4.7463577e+06  0.0000000e+00 -7.4773541e+01
Iyx Iyy Iyz          0.0000000e+00  6.7561750e+06  0.0000000e+00
Izx Izy Izz         -7.4773541e+01  0.0000000e+00  2.0101791e+06

                 PRINCIPAL MOMENTS OF INERTIA:  (KILOGRAM * MM^2)
I1  I2  I3           2.0101791e+06  4.7463577e+06  6.7561750e+06

          ROTATION MATRIX from _C-PLATE orientation to PRINCIPAL AXES:
                       0.00003        1.00000        0.00000
                       0.00000        0.00000        1.00000
                       1.00000       -0.00003        0.00000

     ROTATION ANGLES from _C-PLATE orientation to PRINCIPAL AXES (degrees):
angles about x  y  z  -90.000          0.000        -89.998

                 RADII OF GYRATION with respect to PRINCIPAL AXES:
R1  R2  R3           2.1301301e+02  3.2731732e+02  3.9051633e+02  MM
```

Mass Properties of 21-PWR Waste Package

```
                    MASS PROPERTIES OF THE PART D-PLATE

                         VOLUME =  7.7598600e+06 MM^3
                   SURFACE AREA =  3.1518440e+06 MM^2
                        DENSITY =  2.7000000e-06 KILOGRAM / MM^3
                           MASS =  2.0951622e+01 KILOGRAM

          CENTER OF GRAVITY with respect to _D-PLATE coordinate frame:
X   Y   Z            6.9700000e+02  5.7074763e+02  2.5000000e+00  MM

      INERTIA with respect to _D-PLATE coordinate frame:  (KILOGRAM * MM^2)

INERTIA TENSOR:
Ixx Ixy Ixz          9.0620790e+06 -8.3347877e+06 -3.6508201e+04
Iyx Iyy Iyz         -8.3347877e+06  1.3606264e+07 -2.9895221e+04
Izx Izy Izz         -3.6508201e+04 -2.9895221e+04  2.2667994e+07

     INERTIA at CENTER OF GRAVITY with respect to _D-PLATE coordinate frame:
                                                        (KILOGRAM * MM^2)
INERTIA TENSOR:
Ixx Ixy Ixz          2.2368973e+06  0.0000000e+00  0.0000000e+00
Iyx Iyy Iyz          0.0000000e+00  3.4276470e+06  0.0000000e+00
Izx Izy Izz          0.0000000e+00  0.0000000e+00  5.6644570e+06

                PRINCIPAL MOMENTS OF INERTIA:  (KILOGRAM * MM^2)
I1  I2  I3           2.2368973e+06  3.4276470e+06  5.6644570e+06

          ROTATION MATRIX from _D-PLATE orientation to PRINCIPAL AXES:
                        1.00000        0.00000        0.00000
                        0.00000        1.00000        0.00000
                        0.00000        0.00000        1.00000

     ROTATION ANGLES from _D-PLATE orientation to PRINCIPAL AXES (degrees):
angles about x  y  z    0.000          0.000          0.000

                RADII OF GYRATION with respect to PRINCIPAL AXES:
R1  R2  R3           3.2674895e+02  4.0447271e+02  5.1996046e+02  MM
```

Mass Properties of 21-PWR Waste Package

```
                    MASS PROPERTIES OF THE PART E-PLATE

                         VOLUME =  7.7598600e+06 MM^3
                   SURFACE AREA =  3.1518440e+06 MM^2
                        DENSITY =  2.7000000e-06 KILOGRAM / MM^3
                           MASS =  2.0951622e+01 KILOGRAM

          CENTER OF GRAVITY with respect to _E-PLATE coordinate frame:
X   Y   Z            6.9700000e+02 -2.5000000e+00  5.6703209e+02  MM

      INERTIA with respect to _E-PLATE coordinate frame:  (KILOGRAM * MM^2)

INERTIA TENSOR:
Ixx Ixy Ixz          8.9739568e+06  3.6508201e+04 -8.2805287e+06
Iyx Iyy Iyz          3.6508201e+04  2.2579872e+07  2.9700605e+04
Izx Izy Izz         -8.2805287e+06  2.9700605e+04  1.3606264e+07

     INERTIA at CENTER OF GRAVITY with respect to _E-PLATE coordinate frame:
                                                        (KILOGRAM * MM^2)
INERTIA TENSOR:
Ixx Ixy Ixz          2.2373473e+06  0.0000000e+00  0.0000000e+00
Iyx Iyy Iyz          0.0000000e+00  5.6649070e+06  0.0000000e+00
Izx Izy Izz          0.0000000e+00  0.0000000e+00  3.4276470e+06

                PRINCIPAL MOMENTS OF INERTIA:  (KILOGRAM * MM^2)
I1  I2  I3           2.2373473e+06  3.4276470e+06  5.6649070e+06

          ROTATION MATRIX from _E-PLATE orientation to PRINCIPAL AXES:
                       1.00000        0.00000        0.00000
                       0.00000        0.00000       -1.00000
                       0.00000        1.00000        0.00000

     ROTATION ANGLES from _E-PLATE orientation to PRINCIPAL AXES (degrees):
angles about x  y  z   90.000          0.000          0.000

                RADII OF GYRATION with respect to PRINCIPAL AXES:
R1  R2  R3           3.2678181e+02  4.0447271e+02  5.1998111e+02  MM
```

Mass Properties of 21-PWR Waste Package

```
                    MASS PROPERTIES OF THE PART TUBE

                         VOLUME =  2.0879659e+07 MM^3
                   SURFACE AREA =  8.3616621e+06 MM^2
                        DENSITY =  7.8500000e-06 KILOGRAM / MM^3
                           MASS =  1.6390532e+02 KILOGRAM

            CENTER OF GRAVITY with respect to _TUBE coordinate frame:
X   Y   Z           1.1320000e+02 -1.1320000e+02  2.2876201e+03  MM

       INERTIA with respect to _TUBE coordinate frame:  (KILOGRAM * MM^2)

INERTIA TENSOR:
Ixx Ixy Ixz         1.1472196e+09  2.1003222e+06 -4.2444692e+07
Iyx Iyy Iyz         2.1003222e+06  1.1472196e+09  4.2444691e+07
Izx Izy Izz        -4.2444692e+07  4.2444691e+07  7.1055829e+06

      INERTIA at CENTER OF GRAVITY with respect to _TUBE coordinate frame:
                                                        (KILOGRAM * MM^2)
INERTIA TENSOR:
Ixx Ixy Ixz         2.8736906e+08  0.0000000e+00  0.0000000e+00
Iyx Iyy Iyz         0.0000000e+00  2.8736906e+08  0.0000000e+00
Izx Izy Izz         0.0000000e+00  0.0000000e+00  2.9049385e+06

                PRINCIPAL MOMENTS OF INERTIA:  (KILOGRAM * MM^2)
I1  I2  I3          2.9049385e+06  2.8736906e+08  2.8736906e+08

            ROTATION MATRIX from _TUBE orientation to PRINCIPAL AXES:
                       0.00000        1.00000        0.00000
                       0.00000        0.00000        1.00000
                       1.00000        0.00000        0.00000

       ROTATION ANGLES from _TUBE orientation to PRINCIPAL AXES (degrees):
angles about x  y  z  -90.000          0.000        -90.000

                RADII OF GYRATION with respect to PRINCIPAL AXES:
R1  R2  R3          1.3312878e+02  1.3241082e+03  1.3241082e+03  MM
```

Mass Properties of 21-PWR Waste Package

```
                    MASS PROPERTIES OF THE PART INNERBARRIER

                          VOLUME =  1.0913649e+09 MM^3
                    SURFACE AREA =  4.4610318e+07 MM^2
                         DENSITY =  7.9800000e-06 KILOGRAM / MM^3
                            MASS =  8.7090915e+03 KILOGRAM

        CENTER OF GRAVITY with respect to _INNERBARRIER coordinate frame:
X   Y   Z           0.0000000e+00  0.0000000e+00  2.3875000e+03  MM

   INERTIA with respect to _INNERBARRIER coordinate frame:  (KILOGRAM * MM^2)

INERTIA TENSOR:
Ixx Ixy Ixz         6.8151962e+10  4.6745531e+04  0.0000000e+00
Iyx Iyy Iyz         4.6745531e+04  6.8151964e+10  0.0000000e+00
Izx Izy Izz         0.0000000e+00  0.0000000e+00  4.7387384e+09

  INERTIA at CENTER OF GRAVITY with respect to _INNERBARRIER coordinate frame:
                                                              (KILOGRAM * MM^2)
INERTIA TENSOR:
Ixx Ixy Ixz         1.8508779e+10  4.6745531e+04  0.0000000e+00
Iyx Iyy Iyz         4.6745531e+04  1.8508781e+10  0.0000000e+00
Izx Izy Izz         0.0000000e+00  0.0000000e+00  4.7387384e+09

                PRINCIPAL MOMENTS OF INERTIA:  (KILOGRAM * MM^2)
I1  I2  I3          4.7387384e+09  1.8508733e+10  1.8508827e+10

        ROTATION MATRIX from _INNERBARRIER orientation to PRINCIPAL AXES:
                        0.00000        1.00000        0.00000
                        0.00000        0.00000        1.00000
                        1.00000        0.00000        0.00000

   ROTATION ANGLES from _INNERBARRIER orientation to PRINCIPAL AXES (degrees):
angles about x  y  z  -90.000          0.000        -90.000

                RADII OF GYRATION with respect to PRINCIPAL AXES:
R1  R2  R3          7.3764082e+02  1.4578133e+03  1.4578170e+03  MM
```

Mass Properties of 21-PWR Waste Package

```
                    MASS PROPERTIES OF THE PART INNERLID

                         VOLUME =  1.5037864e+08 MM^3
                   SURFACE AREA =  3.6104442e+06 MM^2
                        DENSITY =  7.9800000e-06 KILOGRAM / MM^3
                           MASS =  1.2000215e+03 KILOGRAM

          CENTER OF GRAVITY with respect to _INNERLID coordinate frame:
X   Y   Z           0.0000000e+00  0.0000000e+00  4.7386565e+01  MM

     INERTIA with respect to _INNERLID coordinate frame:  (KILOGRAM * MM^2)

INERTIA TENSOR:
Ixx Ixy Ixz         1.5476137e+08  4.5134424e+02  0.0000000e+00
Iyx Iyy Iyz         4.5134424e+02  1.5476167e+08  0.0000000e+00
Izx Izy Izz         0.0000000e+00  0.0000000e+00  3.0232859e+08

    INERTIA at CENTER OF GRAVITY with respect to _INNERLID coordinate frame:
                                                          (KILOGRAM * MM^2)
INERTIA TENSOR:
Ixx Ixy Ixz         1.5206674e+08  4.5134424e+02  0.0000000e+00
Iyx Iyy Iyz         4.5134424e+02  1.5206704e+08  0.0000000e+00
Izx Izy Izz         0.0000000e+00  0.0000000e+00  3.0232859e+08

                PRINCIPAL MOMENTS OF INERTIA:  (KILOGRAM * MM^2)
I1  I2  I3          1.5206641e+08  1.5206736e+08  3.0232859e+08

          ROTATION MATRIX from _INNERLID orientation to PRINCIPAL AXES:
                      1.00000        0.00000        0.00000
                      0.00000        1.00000        0.00000
                      0.00000        0.00000        1.00000

     ROTATION ANGLES from _INNERLID orientation to PRINCIPAL AXES (degrees):
angles about x  y  z    0.000          0.000          0.000

                RADII OF GYRATION with respect to PRINCIPAL AXES:
R1  R2  R3          3.5597716e+02  3.5597827e+02  5.0193224e+02  MM
```

Mass Properties of 21-PWR Waste Package

```
                MASS PROPERTIES OF THE PART INNER-LID-LIFT-FEATURE-SS

                          VOLUME =  1.5039006e+06 MM^3
                    SURFACE AREA =  1.6529893e+05 MM^2
                         DENSITY =  7.9800000e-06 KILOGRAM / MM^3
                            MASS =  1.2001127e+01 KILOGRAM

      CENTER OF GRAVITY with respect to _INNER-LID-LIFT-F coordinate frame:
X   Y   Z            0.0000000e+00  0.0000000e+00  3.8603637e+00  MM

 INERTIA with respect to _INNER-LID-LIFT-F coordinate frame:  (KILOGRAM * MM^2)

INERTIA TENSOR:
Ixx Ixy Ixz          6.0407335e+04 -8.7984862e-02  0.0000000e+00
Iyx Iyy Iyz         -8.7984862e-02  6.0407177e+04  0.0000000e+00
Izx Izy Izz          0.0000000e+00  0.0000000e+00  1.1919968e+05

INERTIA at CENTER OF GRAVITY with respect to _INNER-LID-LIFT-F coordinate frame:
                                                                (KILOGRAM * MM^2)
INERTIA TENSOR:
Ixx Ixy Ixz          6.0228489e+04 -8.7984862e-02  0.0000000e+00
Iyx Iyy Iyz         -8.7984862e-02  6.0228332e+04  0.0000000e+00
Izx Izy Izz          0.0000000e+00  0.0000000e+00  1.1919968e+05

                PRINCIPAL MOMENTS OF INERTIA:  (KILOGRAM * MM^2)
I1  I2  I3           6.0228292e+04  6.0228528e+04  1.1919968e+05

      ROTATION MATRIX from _INNER-LID-LIFT-F orientation to PRINCIPAL AXES:
                        1.00000        0.00000        0.00000
                        0.00000        1.00000        0.00000
                        0.00000        0.00000        1.00000

 ROTATION ANGLES from _INNER-LID-LIFT-F orientation to PRINCIPAL AXES (degrees):
angles about x  y  z    0.000          0.000          0.000

                RADII OF GYRATION with respect to PRINCIPAL AXES:
R1  R2  R3           7.0841746e+01  7.0841885e+01  9.9661297e+01  MM
```

Mass Properties of 21-PWR Waste Package

```
                    MASS PROPERTIES OF THE PART WP-OUTERSHELL_NEW_

                          VOLUME =  4.8255885e+08 MM^3
                    SURFACE AREA =  4.9304910e+07 MM^2
                         DENSITY =  8.6900000e-06 KILOGRAM / MM^3
                            MASS =  4.1934364e+03 KILOGRAM

      CENTER OF GRAVITY with respect to _WP-OUTERSHELL_NE coordinate frame:
X   Y   Z          -1.0897083e-02 -2.5050051e+03  0.0000000e+00  MM

 INERTIA with respect to _WP-OUTERSHELL_NE coordinate frame:  (KILOGRAM * MM^2)

INERTIA TENSOR:
Ixx Ixy Ixz         3.6247028e+10 -2.0830700e+05  0.0000000e+00
Iyx Iyy Iyz        -2.0830700e+05  2.5027833e+09  0.0000000e+00
Izx Izy Izz         0.0000000e+00  0.0000000e+00  3.6247023e+10

INERTIA at CENTER OF GRAVITY with respect to _WP-OUTERSHELL_NE coordinate frame:
                                                                (KILOGRAM * MM^2)
INERTIA TENSOR:
Ixx Ixy Ixz         9.9330021e+09 -9.3837727e+04  0.0000000e+00
Iyx Iyy Iyz        -9.3837727e+04  2.5027833e+09  0.0000000e+00
Izx Izy Izz         0.0000000e+00  0.0000000e+00  9.9329973e+09

                PRINCIPAL MOMENTS OF INERTIA:  (KILOGRAM * MM^2)
I1  I2  I3          2.5027833e+09  9.9329970e+09  9.9330024e+09

      ROTATION MATRIX from _WP-OUTERSHELL_NE orientation to PRINCIPAL AXES:
                        0.00000        0.00000        1.00000
                        1.00000        0.00000        0.00000
                        0.00000        1.00000        0.00000

 ROTATION ANGLES from _WP-OUTERSHELL_NE orientation to PRINCIPAL AXES (degrees):
angles about x  y  z     0.000         90.000         90.000

                RADII OF GYRATION with respect to PRINCIPAL AXES:
R1  R2  R3          7.7254999e+02  1.5390585e+03  1.5390589e+03  MM
```

Mass Properties of 21-PWR Waste Package

```
                MASS PROPERTIES OF THE PART WP-EXTENDED-LID_NEW_

                        VOLUME =  1.5192659e+07 MM^3
                  SURFACE AREA =  1.4734575e+06 MM^2
                       DENSITY =  8.6900000e-06 KILOGRAM / MM^3
                          MASS =  1.3202420e+02 KILOGRAM

      CENTER OF GRAVITY with respect to _WP-EXTENDED-LID_ coordinate frame:
X   Y   Z           0.0000000e+00 -6.3942382e+01  0.0000000e+00  MM

 INERTIA with respect to _WP-EXTENDED-LID_ coordinate frame:  (KILOGRAM * MM^2)

INERTIA TENSOR:
Ixx Ixy Ixz         3.7999228e+07  0.0000000e+00  2.0920291e+01
Iyx Iyy Iyz         0.0000000e+00  7.4566604e+07  0.0000000e+00
Izx Izy Izz         2.0920291e+01  0.0000000e+00  3.7999214e+07

INERTIA at CENTER OF GRAVITY with respect to _WP-EXTENDED-LID_ coordinate frame:
                                                                (KILOGRAM * MM^2)
INERTIA TENSOR:
Ixx Ixy Ixz         3.7459430e+07  0.0000000e+00  2.0920291e+01
Iyx Iyy Iyz         0.0000000e+00  7.4566604e+07  0.0000000e+00
Izx Izy Izz         2.0920291e+01  0.0000000e+00  3.7459416e+07

                PRINCIPAL MOMENTS OF INERTIA:  (KILOGRAM * MM^2)
I1  I2  I3          3.7459401e+07  3.7459445e+07  7.4566604e+07

      ROTATION MATRIX from _WP-EXTENDED-LID_ orientation to PRINCIPAL AXES:
                        0.00000        1.00000        0.00000
                        0.00000        0.00000        1.00000
                        1.00000        0.00000        0.00000

 ROTATION ANGLES from _WP-EXTENDED-LID_ orientation to PRINCIPAL AXES (degrees):
angles about x  y  z  -90.000          0.000        -90.000

                RADII OF GYRATION with respect to PRINCIPAL AXES:
R1  R2  R3          5.3266435e+02  5.3266467e+02  7.5152841e+02  MM
```

Mass Properties of 21-PWR Waste Package

```
                MASS PROPERTIES OF THE PART EXTENDED-LID-BASE_NEW_

                          VOLUME =  4.2113292e+07 MM^3
                    SURFACE AREA =  3.4743812e+06 MM^2
                         DENSITY =  8.6900000e-06 KILOGRAM / MM^3
                            MASS =  3.6596450e+02 KILOGRAM

      CENTER OF GRAVITY with respect to _EXTENDED-LID-BAS coordinate frame:
X   Y   Z            0.0000000e+00  0.0000000e+00  1.2500000e+01  MM

 INERTIA with respect to _EXTENDED-LID-BAS coordinate frame:  (KILOGRAM * MM^2)

INERTIA TENSOR:
Ixx Ixy Ixz          4.9138617e+07 -1.6093784e+02  0.0000000e+00
Iyx Iyy Iyz         -1.6093784e+02  4.9138721e+07  0.0000000e+00
Izx Izy Izz          0.0000000e+00  0.0000000e+00  9.8125178e+07

INERTIA at CENTER OF GRAVITY with respect to _EXTENDED-LID-BAS coordinate frame:
                                                                (KILOGRAM * MM^2)
INERTIA TENSOR:
Ixx Ixy Ixz          4.9081435e+07 -1.6093784e+02  0.0000000e+00
Iyx Iyy Iyz         -1.6093784e+02  4.9081539e+07  0.0000000e+00
Izx Izy Izz          0.0000000e+00  0.0000000e+00  9.8125178e+07

                PRINCIPAL MOMENTS OF INERTIA:  (KILOGRAM * MM^2)
I1  I2  I3           4.9081318e+07  4.9081656e+07  9.8125178e+07

      ROTATION MATRIX from _EXTENDED-LID-BAS orientation to PRINCIPAL AXES:
                        1.00000        0.00000        0.00000
                        0.00000        1.00000        0.00000
                        0.00000        0.00000        1.00000

 ROTATION ANGLES from _EXTENDED-LID-BAS orientation to PRINCIPAL AXES (degrees):
angles about x  y  z    0.000          0.000          0.000

                RADII OF GYRATION with respect to PRINCIPAL AXES:
R1  R2  R3           3.6621711e+02  3.6621837e+02  5.1781037e+02  MM
```

Mass Properties of 21-PWR Waste Package

```
                MASS PROPERTIES OF THE PART OUTER-LID-LIFT-FEATURE

                        VOLUME =  1.5039006e+06 MM^3
                  SURFACE AREA =  1.6529893e+05 MM^2
                       DENSITY =  8.6900000e-06 KILOGRAM / MM^3
                          MASS =  1.3068897e+01 KILOGRAM

      CENTER OF GRAVITY with respect to _OUTER-LID-LIFT-F coordinate frame:
X   Y   Z           0.0000000e+00  0.0000000e+00  3.8603637e+00  MM

 INERTIA with respect to _OUTER-LID-LIFT-F coordinate frame:  (KILOGRAM * MM^2)

INERTIA TENSOR:
Ixx Ixy Ixz         6.5781922e+04 -9.5813089e-02  0.0000000e+00
Iyx Iyy Iyz        -9.5813089e-02  6.5781751e+04  0.0000000e+00
Izx Izy Izz         0.0000000e+00  0.0000000e+00  1.2980517e+05

INERTIA at CENTER OF GRAVITY with respect to _OUTER-LID-LIFT-F coordinate frame:
                                                              (KILOGRAM * MM^2)
INERTIA TENSOR:
Ixx Ixy Ixz         6.5587164e+04 -9.5813089e-02  0.0000000e+00
Iyx Iyy Iyz        -9.5813089e-02  6.5586993e+04  0.0000000e+00
Izx Izy Izz         0.0000000e+00  0.0000000e+00  1.2980517e+05

                PRINCIPAL MOMENTS OF INERTIA:  (KILOGRAM * MM^2)
I1  I2  I3          6.5586950e+04  6.5587207e+04  1.2980517e+05

      ROTATION MATRIX from _OUTER-LID-LIFT-F orientation to PRINCIPAL AXES:
                        1.00000        0.00000        0.00000
                        0.00000        1.00000        0.00000
                        0.00000        0.00000        1.00000

 ROTATION ANGLES from _OUTER-LID-LIFT-F orientation to PRINCIPAL AXES (degrees):
angles about x  y  z    0.000          0.000          0.000

                RADII OF GYRATION with respect to PRINCIPAL AXES:
R1  R2  R3          7.0841746e+01  7.0841885e+01  9.9661297e+01  MM
```

Mass Properties of 21-PWR Waste Package

```
                MASS PROPERTIES OF THE PART EXTENDED-LID-WELD-BLOCK

                        VOLUME =  1.1207632e+07 MM^3
                   SURFACE AREA =  8.9661054e+05 MM^2
                        DENSITY =  8.6900000e-06 KILOGRAM / MM^3
                           MASS =  9.7394320e+01 KILOGRAM

      CENTER OF GRAVITY with respect to _EXTENDED-LID-WEL coordinate frame:
X   Y   Z            0.0000000e+00 -2.5000000e+01  0.0000000e+00  MM

 INERTIA with respect to _EXTENDED-LID-WEL coordinate frame:  (KILOGRAM * MM^2)

INERTIA TENSOR:
Ixx Ixy Ixz          2.4902457e+07  0.0000000e+00 -2.4219334e+00
Iyx Iyy Iyz          0.0000000e+00  4.9642591e+07  0.0000000e+00
Izx Izy Izz         -2.4219334e+00  0.0000000e+00  2.4902458e+07

INERTIA at CENTER OF GRAVITY with respect to _EXTENDED-LID-WEL coordinate frame:
                                                                (KILOGRAM * MM^2)
INERTIA TENSOR:
Ixx Ixy Ixz          2.4841585e+07  0.0000000e+00 -2.4219334e+00
Iyx Iyy Iyz          0.0000000e+00  4.9642591e+07  0.0000000e+00
Izx Izy Izz         -2.4219334e+00  0.0000000e+00  2.4841587e+07

                PRINCIPAL MOMENTS OF INERTIA:  (KILOGRAM * MM^2)
I1  I2  I3           2.4841584e+07  2.4841589e+07  4.9642591e+07

      ROTATION MATRIX from _EXTENDED-LID-WEL orientation to PRINCIPAL AXES:
                        0.00000        1.00000        0.00000
                        0.00000        0.00000        1.00000
                        1.00000        0.00000        0.00000

 ROTATION ANGLES from _EXTENDED-LID-WEL orientation to PRINCIPAL AXES (degrees):
angles about x  y  z  -90.000          0.000        -90.000

                RADII OF GYRATION with respect to PRINCIPAL AXES:
R1  R2  R3           5.0503657e+02  5.0503662e+02  7.1393785e+02  MM
```

Mass Properties of 21-PWR Waste Package

```
                    MASS PROPERTIES OF THE PART FLAT-CLOSURE-LID

                          VOLUME =  1.8313357e+07 MM^3
                    SURFACE AREA =  3.7106435e+06 MM^2
                         DENSITY =  8.6900000e-06 KILOGRAM / MM^3
                            MASS =  1.5914307e+02 KILOGRAM

      CENTER OF GRAVITY with respect to _FLAT-CLOSURE-LID coordinate frame:
X   Y   Z            0.0000000e+00  0.0000000e+00  5.0000000e+00  MM

 INERTIA with respect to _FLAT-CLOSURE-LID coordinate frame:  (KILOGRAM * MM^2)

INERTIA TENSOR:
Ixx Ixy Ixz          2.3197736e+07 -7.5438672e+01  0.0000000e+00
Iyx Iyy Iyz         -7.5438672e+01  2.3197687e+07  0.0000000e+00
Izx Izy Izz          0.0000000e+00  0.0000000e+00  4.6384814e+07

INERTIA at CENTER OF GRAVITY with respect to _FLAT-CLOSURE-LID coordinate frame:
                                                                (KILOGRAM * MM^2)
INERTIA TENSOR:
Ixx Ixy Ixz          2.3193758e+07 -7.5438672e+01  0.0000000e+00
Iyx Iyy Iyz         -7.5438672e+01  2.3193709e+07  0.0000000e+00
Izx Izy Izz          0.0000000e+00  0.0000000e+00  4.6384814e+07

                PRINCIPAL MOMENTS OF INERTIA:  (KILOGRAM * MM^2)
I1  I2  I3           2.3193654e+07  2.3193812e+07  4.6384814e+07

      ROTATION MATRIX from _FLAT-CLOSURE-LID orientation to PRINCIPAL AXES:
                        1.00000        0.00000        0.00000
                        0.00000        1.00000        0.00000
                        0.00000        0.00000        1.00000

 ROTATION ANGLES from _FLAT-CLOSURE-LID orientation to PRINCIPAL AXES (degrees):
angles about x  y  z    0.000          0.000          0.000

                RADII OF GYRATION with respect to PRINCIPAL AXES:
R1  R2  R3           3.8176026e+02  3.8176157e+02  5.3987603e+02  MM
```

Mass Properties of 21-PWR Waste Package

```
                MASS PROPERTIES OF THE PART FLAT-OUTER-LID-BOTTOM

                        VOLUME =  4.5569749e+07 MM^3
                  SURFACE AREA =  3.7866036e+06 MM^2
                       DENSITY =  8.6900000e-06 KILOGRAM / MM^3
                          MASS =  3.9600111e+02 KILOGRAM

      CENTER OF GRAVITY with respect to _FLAT-OUTER-LID-B coordinate frame:
X   Y   Z           0.0000000e+00  0.0000000e+00  1.2509299e+01  MM

 INERTIA with respect to _FLAT-OUTER-LID-B coordinate frame:  (KILOGRAM * MM^2)

INERTIA TENSOR:
Ixx Ixy Ixz         5.7523811e+07 -2.0269741e+02  0.0000000e+00
Iyx Iyy Iyz        -2.0269741e+02  5.7523943e+07  0.0000000e+00
Izx Izy Izz         0.0000000e+00  0.0000000e+00  1.1488256e+08

INERTIA at CENTER OF GRAVITY with respect to _FLAT-OUTER-LID-B coordinate frame:
                                                              (KILOGRAM * MM^2)
INERTIA TENSOR:
Ixx Ixy Ixz         5.7461844e+07 -2.0269741e+02  0.0000000e+00
Iyx Iyy Iyz        -2.0269741e+02  5.7461975e+07  0.0000000e+00
Izx Izy Izz         0.0000000e+00  0.0000000e+00  1.1488256e+08

                PRINCIPAL MOMENTS OF INERTIA:  (KILOGRAM * MM^2)
I1  I2  I3          5.7461696e+07  5.7462123e+07  1.1488256e+08

      ROTATION MATRIX from _FLAT-OUTER-LID-B orientation to PRINCIPAL AXES:
                        1.00000        0.00000        0.00000
                        0.00000        1.00000        0.00000
                        0.00000        0.00000        1.00000

 ROTATION ANGLES from _FLAT-OUTER-LID-B orientation to PRINCIPAL AXES (degrees):
angles about x  y  z    0.000          0.000          0.000

                RADII OF GYRATION with respect to PRINCIPAL AXES:
R1  R2  R3          3.8092635e+02  3.8092776e+02  5.3861549e+02  MM
```

Mass Properties of 21-PWR Waste Package

```
MASS PROPERTIES OF THE PART TRUNNION_COLLARSLEEVE_NEW_

                    VOLUME =  5.8382151e+07 MM^3
              SURFACE AREA =  3.9996364e+06 MM^2
                   DENSITY =  8.6900000e-06 KILOGRAM / MM^3
                      MASS =  5.0734089e+02 KILOGRAM

     CENTER OF GRAVITY with respect to _TRUNNION_COLLARS coordinate frame:
X   Y   Z          0.0000000e+00 -1.6652297e+02  0.0000000e+00  MM

 INERTIA with respect to _TRUNNION_COLLARS coordinate frame:  (KILOGRAM * MM^2)

INERTIA TENSOR:
Ixx Ixy Ixz        1.8225281e+08  0.0000000e+00  0.0000000e+00
Iyx Iyy Iyz        0.0000000e+00  3.2512284e+08  0.0000000e+00
Izx Izy Izz        0.0000000e+00  0.0000000e+00  1.8225281e+08

INERTIA at CENTER OF GRAVITY with respect to _TRUNNION_COLLARS coordinate frame:
                                                              (KILOGRAM * MM^2)
INERTIA TENSOR:
Ixx Ixy Ixz        1.6818429e+08  0.0000000e+00  0.0000000e+00
Iyx Iyy Iyz        0.0000000e+00  3.2512284e+08  0.0000000e+00
Izx Izy Izz        0.0000000e+00  0.0000000e+00  1.6818430e+08

                PRINCIPAL MOMENTS OF INERTIA:  (KILOGRAM * MM^2)
I1  I2  I3         1.6818424e+08  1.6818436e+08  3.2512284e+08

     ROTATION MATRIX from _TRUNNION_COLLARS orientation to PRINCIPAL AXES:
                      0.00000        1.00000        0.00000
                      0.00000        0.00000        1.00000
                      1.00000        0.00000        0.00000

 ROTATION ANGLES from _TRUNNION_COLLARS orientation to PRINCIPAL AXES (degrees):
angles about x  y  z  -90.000          0.000        -90.000

                RADII OF GYRATION with respect to PRINCIPAL AXES:
R1  R2  R3         5.7576162e+02  5.7576183e+02  8.0052298e+02  MM
```

Mass Properties of 21-PWR Waste Package

```
MASS PROPERTIES OF THE PART LOWER-TRUNNION-COLLAR-SLEEVE

                    VOLUME =  5.7232595e+07 MM^3
              SURFACE AREA =  4.0114363e+06 MM^2
                   DENSITY =  8.6900000e-06 KILOGRAM / MM^3
                      MASS =  4.9735125e+02 KILOGRAM

      CENTER OF GRAVITY with respect to _LOWER-TRUNNION-C coordinate frame:
X   Y   Z          0.0000000e+00 -1.7730367e+02  0.0000000e+00  MM

 INERTIA with respect to _LOWER-TRUNNION-C coordinate frame:  (KILOGRAM * MM^2)

INERTIA TENSOR:
Ixx Ixy Ixz        1.8077498e+08  0.0000000e+00 -1.4799873e+02
Iyx Iyy Iyz        0.0000000e+00  3.1920900e+08  0.0000000e+00
Izx Izy Izz       -1.4799873e+02  0.0000000e+00  1.8077497e+08

INERTIA at CENTER OF GRAVITY with respect to _LOWER-TRUNNION-C coordinate frame:
                                                              (KILOGRAM * MM^2)
INERTIA TENSOR:
Ixx Ixy Ixz        1.6513996e+08  0.0000000e+00 -1.4799873e+02
Iyx Iyy Iyz        0.0000000e+00  3.1920900e+08  0.0000000e+00
Izx Izy Izz       -1.4799873e+02  0.0000000e+00  1.6513994e+08

                PRINCIPAL MOMENTS OF INERTIA:  (KILOGRAM * MM^2)
I1  I2  I3         1.6513980e+08  1.6514010e+08  3.1920900e+08

      ROTATION MATRIX from _LOWER-TRUNNION-C orientation to PRINCIPAL AXES:
                       0.00000        1.00000        0.00000
                       0.00000        0.00000        1.00000
                       1.00000        0.00000        0.00000

 ROTATION ANGLES from _LOWER-TRUNNION-C orientation to PRINCIPAL AXES (degrees):
angles about x  y  z  -90.000          0.000        -90.000

                RADII OF GYRATION with respect to PRINCIPAL AXES:
R1  R2  R3         5.7622789e+02  5.7622840e+02  8.0113546e+02  MM
```

Mass Properties of 21-PWR Waste Package

```
                    MASS PROPERTIES OF THE PART IB-SUPPORTRING

                          VOLUME =  4.7165778e+06 MM^3
                    SURFACE AREA =  7.3726610e+05 MM^2
                         DENSITY =  8.6900000e-06 KILOGRAM / MM^3
                            MASS =  4.0987061e+01 KILOGRAM

        CENTER OF GRAVITY with respect to _IB-SUPPORTRING coordinate frame:
X   Y   Z            0.0000000e+00 -3.5000000e+01  0.0000000e+00  MM

  INERTIA with respect to _IB-SUPPORTRING coordinate frame:  (KILOGRAM * MM^2)

INERTIA TENSOR:
Ixx Ixy Ixz          1.1610135e+07  0.0000000e+00 -1.4866794e+01
Iyx Iyy Iyz          0.0000000e+00  2.3100110e+07  0.0000000e+00
Izx Izy Izz         -1.4866794e+01  0.0000000e+00  1.1610145e+07

 INERTIA at CENTER OF GRAVITY with respect to _IB-SUPPORTRING coordinate frame:
                                                              (KILOGRAM * MM^2)
INERTIA TENSOR:
Ixx Ixy Ixz          1.1559926e+07  0.0000000e+00 -1.4866794e+01
Iyx Iyy Iyz          0.0000000e+00  2.3100110e+07  0.0000000e+00
Izx Izy Izz         -1.4866794e+01  0.0000000e+00  1.1559936e+07

                 PRINCIPAL MOMENTS OF INERTIA:  (KILOGRAM * MM^2)
I1  I2  I3           1.1559915e+07  1.1559946e+07  2.3100110e+07

        ROTATION MATRIX from _IB-SUPPORTRING orientation to PRINCIPAL AXES:
                        0.00000        1.00000        0.00000
                        0.00000        0.00000        1.00000
                        1.00000        0.00000        0.00000

  ROTATION ANGLES from _IB-SUPPORTRING orientation to PRINCIPAL AXES (degrees):
angles about x  y  z  -90.000          0.000        -90.000

                 RADII OF GYRATION with respect to PRINCIPAL AXES:
R1  R2  R3           5.3107265e+02  5.3107337e+02  7.5072976e+02  MM
```

Mass Properties of 21-PWR Waste Package

```
                MASS PROPERTIES OF THE ASSEMBLY 21-PWR-TOP-ASSEMBLY

                        VOLUME =  3.2956933e+09 MM^3
                   SURFACE AREA =  4.9665396e+08 MM^2
              AVERAGE DENSITY =  7.8997900e-06 KILOGRAM / MM^3
                          MASS =  2.6035285e+04 KILOGRAM

            CENTER OF GRAVITY with respect to ACS4 coordinate frame:
X   Y   Z           8.2200000e+02 -2.6232408e+03  0.0000000e+00  MM

        INERTIA with respect to ACS4 coordinate frame:  (KILOGRAM * MM^2)

INERTIA TENSOR:
Ixx Ixy Ixz         2.5216931e+11  5.6139987e+10  0.0000000e+00
Iyx Iyy Iyz         5.6139987e+10  2.8819761e+10 -2.1288726e+05
Izx Izy Izz         0.0000000e+00 -2.1288726e+05  2.6976093e+11

       INERTIA at CENTER OF GRAVITY with respect to ACS4 coordinate frame:
                                                        (KILOGRAM * MM^2)
INERTIA TENSOR:
Ixx Ixy Ixz         7.3010297e+10  0.0000000e+00  0.0000000e+00
Iyx Iyy Iyz         0.0000000e+00  1.1228135e+10  0.0000000e+00
Izx Izy Izz         0.0000000e+00  0.0000000e+00  7.3010299e+10

                PRINCIPAL MOMENTS OF INERTIA:  (KILOGRAM * MM^2)
I1  I2  I3          1.1228135e+10  7.3010252e+10  7.3010344e+10

            ROTATION MATRIX from ACS4 orientation to PRINCIPAL AXES:
                       0.00000        0.00000        1.00000
                       1.00000        0.00000        0.00000
                       0.00000        1.00000        0.00000

       ROTATION ANGLES from ACS4 orientation to PRINCIPAL AXES (degrees):
angles about x  y  z    0.000          90.000         90.000

                RADII OF GYRATION with respect to PRINCIPAL AXES:
R1  R2  R3          6.5670852e+02  1.6745987e+03  1.6745998e+03  MM
```

Mass Properties of 21-PWR Waste Package

MASS PROPERTIES OF COMPONENTS OF THE ASSEMBLY
(in assembly units and the ACS4 coordinate frame)

DENSITY	MASS	MATERIAL C.G.: X	Y	Z
WP-OUTERSHELL_NEW_		UNKNOWN		
8.69000e-06	4.19344e+03	8.22000e+02	-2.60501e+03	-1.08971e-02
TOP_EXTENDED-OUTERLID		UNKNOWN		
8.69000e-06	7.10304e+02	8.22000e+02	-5.07512e+03	8.95037e-13
WP_EXTENDED_LID-CLOSUREWELD_		UNKNOWN		
8.69000e-06	1.38243e+01	8.22000e+02	-5.15325e+03	7.69251e-13
FLAT-CLOSURE-LID-ASSEMBLY		UNKNOWN		
8.69000e-06	1.75970e+02	8.22000e+02	-5.00665e+03	2.38240e-13
FLAT-OUTER-LID-BOTTOM		UNKNOWN		
8.69000e-06	3.96001e+02	8.22000e+02	-1.12509e+02	1.48383e-13
FLATLID-BOTTOM-WELD		UNKNOWN		
8.69000e-06	1.37261e+01	8.22000e+02	-1.11755e+02	1.09263e-12
IB-ASSEMBLY		UNKNOWN		
7.66016e-06	1.93713e+04	8.22000e+02	-2.57718e+03	-5.09980e-07
TRUNNION_COLLARSLEEVE_NEW_		UNKNOWN		
8.69000e-06	5.07341e+02	8.22000e+02	-4.92652e+03	1.33248e-12
RINGWELD_NEW_		UNKNOWN		
8.69000e-06	3.47407e+01	8.22000e+02	-5.11328e+03	-1.32698e-13
SMALL-RINGWELD		UNKNOWN		
8.69000e-06	1.34853e+01	8.22000e+02	-4.75169e+03	-2.24931e-13
LOWER-TRUNNION-COLLAR-SLEEVE		UNKNOWN		
8.69000e-06	4.97351e+02	8.22000e+02	-1.77304e+02	2.22345e-12
SMALL-RINGWELD		UNKNOWN		
8.69000e-06	1.34853e+01	8.22000e+02	-3.53311e+02	5.26929e-13
TRUNNION-SKIRT-WELD		UNKNOWN		
8.69000e-06	3.68562e+01	8.22000e+02	-8.53129e+01	2.35974e-13
IB-SUPPORTRING-ASM		UNKNOWN		
8.69000e-06	5.74838e+01	8.22000e+02	-1.60000e+02	2.95169e-13

Mass Properties of 21-PWR Waste Package

```
MASS PROPERTIES OF THE PART WP_EXTENDED_LID-CLOSUREWELD_

                    VOLUME =  1.5908342e+06 MM^3
              SURFACE AREA =  3.6203709e+05 MM^2
                   DENSITY =  8.6900000e-06 KILOGRAM / MM^3
                      MASS =  1.3824349e+01 KILOGRAM

     CENTER OF GRAVITY with respect to _WP_EXTENDED_LID- coordinate frame:
X   Y   Z          0.0000000e+00  1.3245241e+01  0.0000000e+00  MM

 INERTIA with respect to _WP_EXTENDED_LID- coordinate frame:  (KILOGRAM * MM^2)

INERTIA TENSOR:
Ixx Ixy Ixz        4.1419866e+06  0.0000000e+00  3.1790704e-01
Iyx Iyy Iyz        0.0000000e+00  8.2777223e+06  0.0000000e+00
Izx Izy Izz        3.1790704e-01  0.0000000e+00  4.1419868e+06

INERTIA at CENTER OF GRAVITY with respect to _WP_EXTENDED_LID- coordinate frame:
                                                              (KILOGRAM * MM^2)
INERTIA TENSOR:
Ixx Ixy Ixz        4.1395613e+06  0.0000000e+00  3.1790704e-01
Iyx Iyy Iyz        0.0000000e+00  8.2777223e+06  0.0000000e+00
Izx Izy Izz        3.1790704e-01  0.0000000e+00  4.1395615e+06

               PRINCIPAL MOMENTS OF INERTIA:  (KILOGRAM * MM^2)
I1  I2  I3         4.1395610e+06  4.1395617e+06  8.2777223e+06

     ROTATION MATRIX from _WP_EXTENDED_LID- orientation to PRINCIPAL AXES:
                      0.00000        1.00000        0.00000
                      0.00000        0.00000        1.00000
                      1.00000        0.00000        0.00000

 ROTATION ANGLES from _WP_EXTENDED_LID- orientation to PRINCIPAL AXES (degrees):
angles about x  y  z  -90.000          0.000        -90.000

               RADII OF GYRATION with respect to PRINCIPAL AXES:
R1  R2  R3         5.4721097e+02  5.4721102e+02  7.7380776e+02  MM
```

Mass Properties of 21-PWR Waste Package

```
                    MASS PROPERTIES OF THE PART RINGWELD_NEW_

                         VOLUME =  3.9977814e+06 MM^3
                   SURFACE AREA =  6.8315799e+05 MM^2
                        DENSITY =  8.6900000e-06 KILOGRAM / MM^3
                           MASS =  3.4740720e+01 KILOGRAM

       CENTER OF GRAVITY with respect to _RINGWELD_NEW_ coordinate frame:
X   Y   Z            0.0000000e+00  1.3277452e+01  0.0000000e+00  MM

   INERTIA with respect to _RINGWELD_NEW_ coordinate frame:  (KILOGRAM * MM^2)

INERTIA TENSOR:
Ixx Ixy Ixz          1.1001554e+07  0.0000000e+00  1.0657224e+00
Iyx Iyy Iyz          0.0000000e+00  2.1984705e+07  0.0000000e+00
Izx Izy Izz          1.0657224e+00  0.0000000e+00  1.1001555e+07

  INERTIA at CENTER OF GRAVITY with respect to _RINGWELD_NEW_ coordinate frame:
                                                          (KILOGRAM * MM^2)
INERTIA TENSOR:
Ixx Ixy Ixz          1.0995430e+07  0.0000000e+00  1.0657224e+00
Iyx Iyy Iyz          0.0000000e+00  2.1984705e+07  0.0000000e+00
Izx Izy Izz          1.0657224e+00  0.0000000e+00  1.0995430e+07

                 PRINCIPAL MOMENTS OF INERTIA:  (KILOGRAM * MM^2)
I1  I2  I3           1.0995429e+07  1.0995431e+07  2.1984705e+07

       ROTATION MATRIX from _RINGWELD_NEW_ orientation to PRINCIPAL AXES:
                        0.00000        1.00000        0.00000
                        0.00000        0.00000        1.00000
                        1.00000        0.00000        0.00000

  ROTATION ANGLES from _RINGWELD_NEW_ orientation to PRINCIPAL AXES (degrees):
angles about x  y  z  -90.000          0.000        -90.000

                 RADII OF GYRATION with respect to PRINCIPAL AXES:
R1  R2  R3           5.6258310e+02  5.6258316e+02  7.9550133e+02  MM
```

Mass Properties of 21-PWR Waste Package

```
                    MASS PROPERTIES OF THE PART WP-LID-FILLET_NEW_

                          VOLUME =  1.0999725e+07 MM^3
                    SURFACE AREA =  1.5707569e+06 MM^2
                         DENSITY =  8.6900000e-06 KILOGRAM / MM^3
                            MASS =  9.5587609e+01 KILOGRAM

      CENTER OF GRAVITY with respect to _WP-LID-FILLET_NE coordinate frame:
X   Y   Z            0.0000000e+00 -4.2461607e+01  0.0000000e+00  MM

 INERTIA with respect to _WP-LID-FILLET_NE coordinate frame:  (KILOGRAM * MM^2)

INERTIA TENSOR:
Ixx Ixy Ixz          2.3543816e+07  0.0000000e+00 -2.0438821e+01
Iyx Iyy Iyz          0.0000000e+00  4.6596129e+07  0.0000000e+00
Izx Izy Izz         -2.0438821e+01  0.0000000e+00  2.3543839e+07

INERTIA at CENTER OF GRAVITY with respect to _WP-LID-FILLET_NE coordinate frame:
                                                                (KILOGRAM * MM^2)

INERTIA TENSOR:
Ixx Ixy Ixz          2.3371473e+07  0.0000000e+00 -2.0438821e+01
Iyx Iyy Iyz          0.0000000e+00  4.6596129e+07  0.0000000e+00
Izx Izy Izz         -2.0438821e+01  0.0000000e+00  2.3371496e+07

                 PRINCIPAL MOMENTS OF INERTIA:  (KILOGRAM * MM^2)
I1  I2  I3           2.3371461e+07  2.3371508e+07  4.6596129e+07

      ROTATION MATRIX from _WP-LID-FILLET_NE orientation to PRINCIPAL AXES:
                        0.00000        1.00000        0.00000
                        0.00000        0.00000        1.00000
                        1.00000        0.00000        0.00000

 ROTATION ANGLES from _WP-LID-FILLET_NE orientation to PRINCIPAL AXES (degrees):
angles about x  y  z  -90.000          0.000        -90.000

                 RADII OF GYRATION with respect to PRINCIPAL AXES:
R1  R2  R3           4.9447248e+02  4.9447298e+02  6.9819080e+02  MM
```

Mass Properties of 21-PWR Waste Package

```
              MASS PROPERTIES OF THE PART OB-EXTENDED-LID-BASE-WELD

                        VOLUME =  3.6046503e+05 MM^3
                  SURFACE AREA =  1.9684496e+05 MM^2
                       DENSITY =  8.6900000e-06 KILOGRAM / MM^3
                          MASS =  3.1324411e+00 KILOGRAM

      CENTER OF GRAVITY with respect to _OB-EXTENDED-LID- coordinate frame:
X   Y   Z           0.0000000e+00  4.1725772e+00  0.0000000e+00  MM

 INERTIA with respect to _OB-EXTENDED-LID- coordinate frame:  (KILOGRAM * MM^2)

INERTIA TENSOR:
Ixx Ixy Ixz         8.4469982e+05  0.0000000e+00  3.9308675e-03
Iyx Iyy Iyz         0.0000000e+00  1.6892361e+06  0.0000000e+00
Izx Izy Izz         3.9308675e-03  0.0000000e+00  8.4469982e+05

INERTIA at CENTER OF GRAVITY with respect to _OB-EXTENDED-LID- coordinate frame:
                                                              (KILOGRAM * MM^2)
INERTIA TENSOR:
Ixx Ixy Ixz         8.4464528e+05  0.0000000e+00  3.9308675e-03
Iyx Iyy Iyz         0.0000000e+00  1.6892361e+06  0.0000000e+00
Izx Izy Izz         3.9308675e-03  0.0000000e+00  8.4464528e+05

                PRINCIPAL MOMENTS OF INERTIA:  (KILOGRAM * MM^2)
I1  I2  I3          8.4464528e+05  8.4464528e+05  1.6892361e+06

      ROTATION MATRIX from _OB-EXTENDED-LID- orientation to PRINCIPAL AXES:
                        0.00000        1.00000        0.00000
                        0.00000        0.00000        1.00000
                        1.00000        0.00000        0.00000

 ROTATION ANGLES from _OB-EXTENDED-LID- orientation to PRINCIPAL AXES (degrees):
angles about x  y  z  -90.000          0.000        -90.000

                RADII OF GYRATION with respect to PRINCIPAL AXES:
R1  R2  R3          5.1927298e+02  5.1927298e+02  7.3435105e+02  MM
```

Mass Properties of 21-PWR Waste Package

```
                    MASS PROPERTIES OF THE PART FLATLID-CLOSUREWELD

                          VOLUME =  4.3246117e+05 MM^3
                    SURFACE AREA =  2.6008227e+05 MM^2
                         DENSITY =  8.6900000e-06 KILOGRAM / MM^3
                            MASS =  3.7580876e+00 KILOGRAM

      CENTER OF GRAVITY with respect to _FLATLID-CLOSUREW coordinate frame:
X   Y   Z            0.0000000e+00 -3.7193985e-01  0.0000000e+00  MM

 INERTIA with respect to _FLATLID-CLOSUREW coordinate frame:  (KILOGRAM * MM^2)

INERTIA TENSOR:
Ixx Ixy Ixz          1.0990852e+06  0.0000000e+00  2.2123126e-01
Iyx Iyy Iyz          0.0000000e+00  2.1979892e+06  0.0000000e+00
Izx Izy Izz          2.2123126e-01  0.0000000e+00  1.0990852e+06

INERTIA at CENTER OF GRAVITY with respect to _FLATLID-CLOSUREW coordinate frame:
                                                                (KILOGRAM * MM^2)
INERTIA TENSOR:
Ixx Ixy Ixz          1.0990846e+06  0.0000000e+00  2.2123126e-01
Iyx Iyy Iyz          0.0000000e+00  2.1979892e+06  0.0000000e+00
Izx Izy Izz          2.2123126e-01  0.0000000e+00  1.0990846e+06

                PRINCIPAL MOMENTS OF INERTIA:  (KILOGRAM * MM^2)
I1  I2  I3           1.0990844e+06  1.0990849e+06  2.1979892e+06

      ROTATION MATRIX from _FLATLID-CLOSUREW orientation to PRINCIPAL AXES:
                        0.00000        1.00000        0.00000
                        0.00000        0.00000        1.00000
                        1.00000        0.00000        0.00000

 ROTATION ANGLES from _FLATLID-CLOSUREW orientation to PRINCIPAL AXES (degrees):
angles about x  y  z  -90.000          0.000        -90.000

                RADII OF GYRATION with respect to PRINCIPAL AXES:
R1  R2  R3           5.4079426e+02  5.4079437e+02  7.6476733e+02  MM
```

Mass Properties of 21-PWR Waste Package

```
                    MASS PROPERTIES OF THE PART INNERLID-WELD

                         VOLUME =  8.0277469e+06 MM^3
                   SURFACE AREA =  1.0212646e+06 MM^2
                        DENSITY =  7.9800000e-06 KILOGRAM / MM^3
                           MASS =  6.4061421e+01 KILOGRAM

       CENTER OF GRAVITY with respect to _INNERLID-WELD coordinate frame:
X   Y   Z            0.0000000e+00  5.3946946e+01  0.0000000e+00  MM

   INERTIA with respect to _INNERLID-WELD coordinate frame:  (KILOGRAM * MM^2)

INERTIA TENSOR:
Ixx Ixy Ixz          1.6809783e+07  0.0000000e+00  0.0000000e+00
Iyx Iyy Iyz          0.0000000e+00  3.3155975e+07  0.0000000e+00
Izx Izy Izz          0.0000000e+00  0.0000000e+00  1.6809782e+07

  INERTIA at CENTER OF GRAVITY with respect to _INNERLID-WELD coordinate frame:
                                                          (KILOGRAM * MM^2)
INERTIA TENSOR:
Ixx Ixy Ixz          1.6623346e+07  0.0000000e+00  0.0000000e+00
Iyx Iyy Iyz          0.0000000e+00  3.3155975e+07  0.0000000e+00
Izx Izy Izz          0.0000000e+00  0.0000000e+00  1.6623346e+07

                PRINCIPAL MOMENTS OF INERTIA:  (KILOGRAM * MM^2)
I1  I2  I3           1.6623346e+07  1.6623347e+07  3.3155975e+07

       ROTATION MATRIX from _INNERLID-WELD orientation to PRINCIPAL AXES:
                        0.00000        1.00000        0.00000
                        0.00000        0.00000        1.00000
                        1.00000        0.00000        0.00000

  ROTATION ANGLES from _INNERLID-WELD orientation to PRINCIPAL AXES (degrees):
angles about x  y  z  -90.000          0.000        -90.000

                RADII OF GYRATION with respect to PRINCIPAL AXES:
R1  R2  R3           5.0940234e+02  5.0940236e+02  7.1942019e+02  MM
```

Mass Properties of 21-PWR Waste Package

```
                    MASS PROPERTIES OF THE PART SMALL-RINGWELD

                          VOLUME =  1.5518159e+06 MM^3
                    SURFACE AREA =  4.2412957e+05 MM^2
                         DENSITY =  8.6900000e-06 KILOGRAM / MM^3
                            MASS =  1.3485280e+01 KILOGRAM

       CENTER OF GRAVITY with respect to _SMALL-RINGWELD coordinate frame:
X   Y   Z            0.0000000e+00  8.3113665e+00  0.0000000e+00  MM

  INERTIA with respect to _SMALL-RINGWELD coordinate frame:  (KILOGRAM * MM^2)

INERTIA TENSOR:
Ixx Ixy Ixz          4.2137356e+06  0.0000000e+00  1.9484745e-02
Iyx Iyy Iyz          0.0000000e+00  8.4246736e+06  0.0000000e+00
Izx Izy Izz          1.9484745e-02  0.0000000e+00  4.2137356e+06

 INERTIA at CENTER OF GRAVITY with respect to _SMALL-RINGWELD coordinate frame:
                                                              (KILOGRAM * MM^2)
INERTIA TENSOR:
Ixx Ixy Ixz          4.2128041e+06  0.0000000e+00  1.9484745e-02
Iyx Iyy Iyz          0.0000000e+00  8.4246736e+06  0.0000000e+00
Izx Izy Izz          1.9484745e-02  0.0000000e+00  4.2128041e+06

                PRINCIPAL MOMENTS OF INERTIA:  (KILOGRAM * MM^2)
I1  I2  I3           4.2128041e+06  4.2128041e+06  8.4246736e+06

       ROTATION MATRIX from _SMALL-RINGWELD orientation to PRINCIPAL AXES:
                        0.00000        1.00000        0.00000
                        0.00000        0.00000        1.00000
                        1.00000        0.00000        0.00000

  ROTATION ANGLES from _SMALL-RINGWELD orientation to PRINCIPAL AXES (degrees):
angles about x  y  z  -90.000          0.000        -90.000

                RADII OF GYRATION with respect to PRINCIPAL AXES:
R1  R2  R3           5.5892772e+02  5.5892772e+02  7.9039932e+02  MM
```

Mass Properties of 21-PWR Waste Package

```
                MASS PROPERTIES OF THE PART IB-SUPPORT-RING-WELD_

                        VOLUME =  9.4917986e+05 MM^3
                   SURFACE AREA =  3.2389677e+05 MM^2
                        DENSITY =  8.6900000e-06 KILOGRAM / MM^3
                           MASS =  8.2483730e+00 KILOGRAM

      CENTER OF GRAVITY with respect to _IB-SUPPORT-RING- coordinate frame:
X   Y   Z           0.0000000e+00 -6.6813769e+00  0.0000000e+00  MM

 INERTIA with respect to _IB-SUPPORT-RING- coordinate frame:  (KILOGRAM * MM^2)

INERTIA TENSOR:
Ixx Ixy Ixz         2.3537922e+06  0.0000000e+00 -1.0964753e-02
Iyx Iyy Iyz         0.0000000e+00  4.7064807e+06  0.0000000e+00
Izx Izy Izz        -1.0964753e-02  0.0000000e+00  2.3537922e+06

INERTIA at CENTER OF GRAVITY with respect to _IB-SUPPORT-RING- coordinate frame:
                                                                (KILOGRAM * MM^2)
INERTIA TENSOR:
Ixx Ixy Ixz         2.3534239e+06  0.0000000e+00 -1.0964753e-02
Iyx Iyy Iyz         0.0000000e+00  4.7064807e+06  0.0000000e+00
Izx Izy Izz        -1.0964753e-02  0.0000000e+00  2.3534239e+06

                PRINCIPAL MOMENTS OF INERTIA:  (KILOGRAM * MM^2)
I1  I2  I3          2.3534239e+06  2.3534239e+06  4.7064807e+06

      ROTATION MATRIX from _IB-SUPPORT-RING- orientation to PRINCIPAL AXES:
                      0.00000        1.00000        0.00000
                      0.00000        0.00000        1.00000
                      1.00000        0.00000        0.00000

 ROTATION ANGLES from _IB-SUPPORT-RING- orientation to PRINCIPAL AXES (degrees):
angles about x  y  z  -90.000          0.000        -90.000

                RADII OF GYRATION with respect to PRINCIPAL AXES:
R1  R2  R3          5.3415333e+02  5.3415333e+02  7.5537741e+02  MM
```

Mass Properties of 21-PWR Waste Package

```
                    MASS PROPERTIES OF THE PART FLATLID-BOTTOM-WELD

                          VOLUME =  1.5795266e+06 MM^3
                    SURFACE AREA =  3.5946382e+05 MM^2
                         DENSITY =  8.6900000e-06 KILOGRAM / MM^3
                            MASS =  1.3726086e+01 KILOGRAM

      CENTER OF GRAVITY with respect to _FLATLID-BOTTOM-W coordinate frame:
X   Y   Z            0.0000000e+00  1.3245253e+01  0.0000000e+00  MM

 INERTIA with respect to _FLATLID-BOTTOM-W coordinate frame:  (KILOGRAM * MM^2)

INERTIA TENSOR:
Ixx Ixy Ixz          4.0543378e+06  0.0000000e+00  3.0704241e-01
Iyx Iyy Iyz          0.0000000e+00  8.1024692e+06  0.0000000e+00
Izx Izy Izz          3.0704241e-01  0.0000000e+00  4.0543380e+06

INERTIA at CENTER OF GRAVITY with respect to _FLATLID-BOTTOM-W coordinate frame:
                                                                (KILOGRAM * MM^2)
INERTIA TENSOR:
Ixx Ixy Ixz          4.0519297e+06  0.0000000e+00  3.0704241e-01
Iyx Iyy Iyz          0.0000000e+00  8.1024692e+06  0.0000000e+00
Izx Izy Izz          3.0704241e-01  0.0000000e+00  4.0519299e+06

                PRINCIPAL MOMENTS OF INERTIA:  (KILOGRAM * MM^2)
I1  I2  I3           4.0519295e+06  4.0519301e+06  8.1024692e+06

      ROTATION MATRIX from _FLATLID-BOTTOM-W orientation to PRINCIPAL AXES:
                       0.00000        1.00000        0.00000
                       0.00000        0.00000        1.00000
                       1.00000        0.00000        0.00000

 ROTATION ANGLES from _FLATLID-BOTTOM-W orientation to PRINCIPAL AXES (degrees):
angles about x  y  z  -90.000          0.000        -90.000

                RADII OF GYRATION with respect to PRINCIPAL AXES:
R1  R2  R3           5.4332236e+02  5.4332240e+02  7.6830796e+02  MM
```

Mass Properties of 21-PWR Waste Package

```
                MASS PROPERTIES OF THE PART TRUNNION-SKIRT-WELD

                        VOLUME =  4.2412249e+06 MM^3
                  SURFACE AREA =  7.0579797e+05 MM^2
                       DENSITY =  8.6900000e-06 KILOGRAM / MM^3
                          MASS =  3.6856244e+01 KILOGRAM

      CENTER OF GRAVITY with respect to _TRUNNION-SKIRT-W coordinate frame:
X   Y   Z           0.0000000e+00 -1.4687079e+01  0.0000000e+00  MM

 INERTIA with respect to _TRUNNION-SKIRT-W coordinate frame:  (KILOGRAM * MM^2)

INERTIA TENSOR:
Ixx Ixy Ixz         1.0941792e+07  0.0000000e+00 -1.0746011e+00
Iyx Iyy Iyz         0.0000000e+00  2.1859782e+07  0.0000000e+00
Izx Izy Izz        -1.0746011e+00  0.0000000e+00  1.0941792e+07

INERTIA at CENTER OF GRAVITY with respect to _TRUNNION-SKIRT-W coordinate frame:
                                                              (KILOGRAM * MM^2)
INERTIA TENSOR:
Ixx Ixy Ixz         1.0933841e+07  0.0000000e+00 -1.0746011e+00
Iyx Iyy Iyz         0.0000000e+00  2.1859782e+07  0.0000000e+00
Izx Izy Izz        -1.0746011e+00  0.0000000e+00  1.0933842e+07

                PRINCIPAL MOMENTS OF INERTIA:  (KILOGRAM * MM^2)
I1  I2  I3          1.0933841e+07  1.0933843e+07  2.1859782e+07

      ROTATION MATRIX from _TRUNNION-SKIRT-W orientation to PRINCIPAL AXES:
                      0.00000        1.00000        0.00000
                      0.00000        0.00000        1.00000
                      1.00000        0.00000        0.00000

 ROTATION ANGLES from _TRUNNION-SKIRT-W orientation to PRINCIPAL AXES (degrees):
angles about x  y  z  -90.000          0.000        -90.000

                RADII OF GYRATION with respect to PRINCIPAL AXES:
R1  R2  R3          5.4466671e+02  5.4466676e+02  7.7013592e+02  MM
```