Docket File

APRIL 20 1981

RECEIVED
APR 23 1981
U.S. NUCLEAR REGULATORY COMMISSION

Dockets Nos. 50-269, 50-270, 50-287

Mr. William O. Parker, Jr.
Vice President - Steam Production
Duke Power Company
P. O. Box 2178, 422 South Church Street
Charlotte, North Carolina 28242

Dear Mr. Parker:

SUBJECT: ORDER FOR MODIFICATION OF LICENSES CONCERNING PRIMARY COOLANT SYSTEM PRESSURE ISOLATION VALVES

This letter transmits an Order for Modification of Licenses which revises the Technical Specifications for Facility Operating Licenses Nos. DPR-38, DPR-47 and DPR-55 for the Oconee Nuclear Station, Units Nos. 1, 2 and 3. The change is a result of the information you provided in response to our 10 CFR 50.54(f) letter of February 23, 1980, regarding primary coolant system pressure isolation valves. Based upon our review of your response, as well as other previously docketed information, we have concluded that a WASH-1400 Event V valve configuration exists at your facilities and that corrective action as defined in the attached Order is necessary.

Attached to the Order for Modification of Licenses is the Technical Evaluation Report (TER) which supports the Order; and the Station Technical Specifications which will ensure public health and safety over the operating life of your facilities. We are aware that there may be editorial corrections to the attached TER. Please note that the Technical Specifications correctly delineate the requirements for your facilities.

In addition to Event V valve configurations, we are continuing our efforts to review other configurations located at high pressure/low pressure system boundaries for their potential risk contribution to an intersystem LOCA. Therefore, further activity regarding the broader topic of intersystem LOCA's may be expected in the future.

8104270240
P

A copy of the enclosed Order is being filed with the Office of the Federal Register for publication.

Sincerely,

Original signed by
John F. Stolz, Chief
Operating Reactors Branch #4
Division of Licensing

Enclosure:
Order for Modification
of Licenses

cc w/enclosure:
See next page

OFFICE ▶							
SURNAME ▶							
DATE ▶							

A copy of the enclosed Order is being filed with the Office of the Federal Register for publication.

Sincerely,

Robert W. Reid, Chief
Operating Reactors Branch #4
Division of Licensing

Enclosure:
Order for Modification
of Licenses

cc w/enclosure:
See next page

DISTRIBUTION
Docket File-3
NRC PDR
L PDR
TERA-3
NSIC
ORB#4 Rdg

DEisenhut

JOlshinski
RIngram
PWagner
OELD
I&E-3
BJones-12
ACRS-10
OPA
SECY
RDiggs
JHeltemes
Gray File+4
EBlackwood
HOrnstein

		ORB#2:DL PPolk 3/14/81	C-ORB#2:DL TIppolito 3/ /81		NA RP 4/14/81 JSohinki	NA RP 4/14/81	
OFFICE	ORB#4:DL	ORB#4:DL	C-ORB#4:DL	AD:OR:DL	OELD	DP:DL	D:DL
SURNAME	~~EHylton~~ R.Ingram	PWagner;cf	~~RReid~~ JStolz	TNovak	JMurray	RPurple	~~DEisenhut~~
DATE	3/10/81	3/10/81	3/13/81	4/16/81	3/ /81	3/ /81	4/20/81

UNITED STATES
NUCLEAR REGULATORY COMMISSION
WASHINGTON, D. C. 20555

April 20, 1981

Dockets Nos. 50-269, 50-270, 50-287

Mr. William O. Parker, Jr.
Vice President - Steam Production
Duke Power Company
P. O. Box 2178, 422 South Church Street
Charlotte, North Carolina 28242

Dear Mr. Parker:

SUBJECT: ORDER FOR MODIFICATION OF LICENSES CONCERNING PRIMARY COOLANT SYSTEM PRESSURE ISOLATION VALVES

This letter transmits an Order for Modification of Licenses which revises the Technical Specifications for Facility Operating Licenses Nos. DPR-38, DPR-47 and DPR-55 for the Oconee Nuclear Station, Units Nos. 1, 2 and 3. The change is a result of the information you provided in response to our 10 CFR 50.54(f) letter of February 23, 1980, regarding primary coolant system pressure isolation valves. Based upon our review of your response, as well as other previously docketed information, we have concluded that a WASH-1400 Event V valve configuration exists at your facilities and that corrective action as defined in the attached Order is necessary.

Attached to the Order for Modification of Licenses is the Technical Evaluation Report (TER) which supports the Order; and the Station Technical Specifications which will ensure public health and safety over the operating life of your facilities. We are aware that there may be editorial corrections to the attached TER. Please note that the Technical Specifications correctly delineate the requirements for your facilities.

In addition to Event V valve configurations, we are continuing our efforts to review other configurations located at high pressure/low pressure system boundaries for their potential risk contribution to an intersystem LOCA. Therefore, further activity regarding the broader topic of intersystem LOCA's may be expected in the future.

A copy of the enclosed Order is being filed with the Office of the Federal Register for publication.

Sincerely,

John F. Stolz, Chief
Operating Reactors Branch #4
Division of Licensing

Enclosure:
Order for Modification
of Licenses

cc w/enclosure:
See next page

Duke Power Company

cc w/enclosure(s):

Mr. William L. Porter
Duke Power Company
P. O. Box 2178
422 South Church Street
Charlotte, North Carolina 28242

Oconee County Library
501 West Southbroad Street
Walhalla, South Carolina 29691

Honorable James M. Phinney
County Supervisor of Oconee County
Walhalla, South Carolina 29621

Director, Criteria and Standards
Division
Office of Radiation Programs (ANR-460)
U. S. Environmental Protection Agency
Washington, D. C. 20460

U. S. Environmental Protection Agency
Region IV Office
ATTN: EIS COORDINATOR
345 Courtland Street, N.E.
Atlanta, Georgia 30308

Mr. Francis Jape
U.S. Nuclear Regulatory Commission
Route 2, Box 610
Seneca, South Carolina 29678

Mr. Robert B. Borsum
Babcock & Wilcox
Nuclear Power Generation Division
Suite 420, 7735 Old Georgetown Road
Bethesda, Maryland 20014

Manager, LIS
NUS Corporation
2536 Countryside Boulevard
Clearwater, Florida 33515

J. Michael McGarry, III, Esq.
DeBevoise & Liberman
1200 17th Street, N.W.
Washington, D. C. 20036

Office of Intergovernmental Relations
116 West Jones Street
Raleigh, North Carolina 27603

7590-01

UNITED STATES OF AMERICA
NUCLEAR REGULATORY COMMISSION

In the Matter of DUKE POWER COMPANY (Oconee Nuclear Station, Units Nos. 1, 2 and 3)	)	Dockets Nos. 50-269, 50-270 and 50-287

ORDER FOR MODIFICATION OF LICENSES

I

The Duke Power Company (the licensee) holds Facility Operating Licenses Nos. DPR-38, DPR-47 and DPR-55, which authorize the licensee to operate the Oconee Nuclear Station, Units Nos. 1, 2 and 3 (the facilities) at power levels not in excess of 2568 megawatts thermal rated power for each unit. The facilities, which are located at the licensee's site in Oconee County, South Carolina, are pressurized water reactors (PWRs) used for the commercial generation of electricity.

II

The Reactor Safety Study (RSS), WASH-1400, identified in a PWR an inter-system loss of coolant accident (LOCA) which is a significant contributor to risk of core melt accidents (Event V). The design examined in the RSS contained in-series check valves isolating the high pressure Primary Coolant System (PCS) from the Low Pressure Injection System (LPIS) piping. The scenario which leads to the Event V accident is initiated by the failure of these check valves to function as a pressure isolation barrier. This causes an overpressurization and rupture of the LPIS low pressure piping which results in a LOCA that bypasses containment.

8104270245

In order to better define the Event V concern, all light water reactor licensees were requested by letter dated February 23, 1980, to provide the following in accordance with 10 CFR 50.54(f):

1. Describe the valve configurations and indicate if an Event V isolation valve configuration exists within the Class I boundary of the high pressure piping connecting PCS piping to low pressure system piping; e.g., (1) two check valves in series, or (2) two check valves in series with a motor operated valve (MOV);
2. If either of the above Event V configurations exist, indicate whether continuous surveillance or periodic tests are being performed on such valves to ensure integrity. Also indicate whether valves have been known, or found, to lack integrity; and
3. If either of the above Event V configurations exist, indicate whether plant procedures should be revised or if plant modifications should be made to increase reliability.

In addition to the above, licensees were asked to perform individual check valve leak testing prior to plant startup after the next scheduled outage.

By letter dated March 13, 1980, the licensee responded to our February letter. Based upon the review of this response as well as the review of previously docketed information for the facilities, I have concluded in consonance with the attached Safety Evaluation (Attachment 1) that one or more valve configuration(s) of concern exist at your facilities. The attached Technical Evaluation Report (TER) (Attachment 2) provides, in Section 4.0, a tabulation of the subject valves.

The staff's concern has been exacerbated due not only to the large number of plants which have an Event V configuration(s) but also because of recent unsatisfactory operating experience. Specifically, two plants have leak tested check valves with unsatisfactory results. At Davis-Besse, a pressure isolation check valve in the LPIS failed and the ensuing investigation found that valve internals had become disassembled. At the Sequoyah Nuclear Plant, two Residual Heat Removal (RHR) injection check valves and one RHR recirculation check valve failed because valves jammed open against valve over-travel limiters.

It is, therefore, apparent that when pressure isolation is provided by two in-series check valves and when failure of one valve in the pair can go undetected for a substantial length of time, verification of valve integrity is required. Since these valves are important to safety, they should be tested periodically to ensure low probability of gross failure. As a result, I have determined that periodic examination of check valves must be undertaken by the licensee as provided in Section III below to verify that each valve is seated properly and functioning as a pressure isolation device. Such testing will reduce the overall risk of an inter-system LOCA. The testing mandated by this Order may be accomplished by direct volumetric leakage measurement or by other equivalent means capable of demonstrating that leakage limits are not exceeded in accordance with Section 2.2 of the attached TER.

In view of the operating experiences described above and the potential consequences of check valve failure, I have determined that prompt action is necessary to increase the level of assurance that multiple pressure isolation barriers are in place and will remain intact. Therefore, the public health, safety and interest require that this modification of Facility Operating Licenses Nos. DPR-38, DPR-47 and DPR-55 be immediately effective.

III

Accordingly, pursuant to Section 161i of the Atomic Energy Act of 1954, as amended, and the Commission's regulations in 10 CFR Parts 2 and 50, IT IS HEREBY ORDERED THAT EFFECTIVE IMMEDIATELY, Facility Operating Licenses Nos. DPR-38, DPR-47 and DPR-55 are modified by the addition of the following requirements:

1. Implement Technical Specifications (Attachment 3) which require periodic surveillance over the life of the plant and which specify limiting conditions for operation for PCS pressure isolation valves.
2. If check valves have not been (a) individually tested within 12 months preceding the date of the Order, and (b) found to comply with the leakage rate criteria set forth in the Technical Specifications described in Attachment 3, the MOV in each line shall be closed within 30 days of the effective date of this Order and quarterly Inservice Inspection (ISI) MOV cycling ceased until the check valve tests have been satisfactorily accomplished. (Prior to closing the MOV, procedures shall be implemented and operators trained to assure

that the MOV remains closed. Once closed, the MOV shall be tagged closed to further preclude inadvertent valve opening).

3. The MOV shall not be closed as indicated in paragraph 2 above unless a supporting safety evaluation has been prepared. If the MOV is in an emergency core cooling system (ECCS), the safety evaluation shall include a determination as to whether the requirements of 10 CFR 50.46 and Appendix K to 10 CFR Part 50 will continue to be satisfied with the MOV closed. If the MOV is not in an ECCS, the safety evaluation shall include a determination as to whether operation with the MOV closed presents an unreviewed safety question as defined in 10 CFR 50.59(a)(2). If the requirements of 10 CFR 50.46 and Appendix K have not been satisfied, or if an unreviewed safety question exists as defined in 10 CFR 50.59, then the facility shall be shut down within 30 days of the date of this Order and remain shutdown until check valves are satisfactorily tested in accordance with the Technical Specifications set forth in Attachment 3.

4. The records of the check valve tests required by this Order shall be made available for inspection by the NRC's Office of Inspection and Enforcement.

IV

The licensee or any other person who has an interest affected by this Order may request a hearing on this Order within 25 days of its publication in the Federal Register. A request for hearing shall be submitted to the Secretary, U.S. Nuclear Regulatory Commission, Washington, D.C. 20555. A copy of the request shall also be sent to the Executive Legal Director at the same address, and to William S. Porter, Duke Power Company, P. O. Box 2178, 422 South Church Street, Charlotte, North Carolina 28242, attorney for the licensee. If a hearing is requested by a person other than the licensee, that person shall describe, in accordance with 10 CFR 2.714(a)(2), the manner in which his or her interest is affected by this Order. ANY REQUEST FOR A HEARING SHALL NOT STAY THE IMMEDIATE EFFECTIVENESS OF THIS ORDER.

If a hearing is requested by the licensee or other person who has an interest affected by this Order, the Commission will issue an order designating the time and place of any such hearing. If a hearing is held, the issues to be considered at such a hearing shall be:

(a) Whether the licensee should be required to individually leak test check valves in accordance with the Technical Specifications set forth in Attachment 3 to this Order.

(b) Whether the actions required by Paragraphs 2 and 3 of Section III of this Order must be taken if check valves have not been tested within 12 months preceding the date of this Order.

Operation of the facilities on terms consistent with this Order is not stayed by the pendency of any proceedings on this Order. In the event that a need for further action becomes apparent, either in the course of proceedings on this Order or any other time, the Director will take appropriate action.

FOR THE NUCLEAR REGULATORY COMMISSION

Darrell G. Eisenhut, Director
Division of Licensing

Effective Date: April 20, 1981
Bethesda, Maryland

Attachments:
1. Safety Evaluation Report
2. Technical Evaluation Report
3. Technical Specifications

UNITED STATES
NUCLEAR REGULATORY COMMISSION
WASHINGTON, D. C. 20555

Attachment 1

SAFETY EVALUATION REPORT
OCONEE NUCLEAR STATION, UNITS NOS. 1, 2 AND 3
PRIMARY COOLANT SYSTEM PRESSURE ISOLATION VALVES
(WASH-1400, EVENT V)

1.0 Introduction

The Reactor Safety Study (RSS), WASH-1400, identified in a PWR an intersystem loss of coolant accident (LOCA) which is a significant contributor to risk of core melt accidents (Event V). The design examined in the RSS contained in-series check valves isolating the high pressure Primary Coolant System (PCS) from the Low Pressure Injection System (LPIS) piping. The scenario which leads to the Event V accident is initiated by the failure of these check valves to function as a pressure isolation barrier. This causes an overpressurization and rupture of the LPIS low pressure piping which results in a LOCA that bypasses containment.

In order to better define the Event V concern, all light water reactor licensees were requested by 10 CFR 50.54(f) letter, dated February 23, 1980, to identify valve configurations of concern and prior valve test results, if any. By letter dated March 13, 1980, the licensee responded to our request and this information was subsequently transmitted to our contractor, the Franklin Research Center, for verification that the licensee had correctly identified the subject valve configurations.

2.0 Evaluation

In order to prepare the Technical Evaluation Report (TER) it was necessary that the contractor verify and evaluate the licensee's response to our February 1980 letter. The NRC acceptance criteria used by Franklin were based on WASH-1400 findings, probabilistic analyses and appropriate Standard Review Plan requirements. With respect to the verification of the licensee's response to our information request, the Franklin evaluation was based on FSAR information, ISI/IST site visit data, and other previously docketed information. The attached Franklin TER correctly identifies the subject valve configurations.

3.0 Conclusion

Based on our review of the Franklin TER, we find that the valve configurations of concern have been correctly identified. Since periodic testing of these PCS pressure isolation valves will reduce the probability of an intersystem LOCA we, therefore, conclude that the requirement to test these valves should be incorporated into the Station's Technical Specifications.

Dated: April 20, 1981

8104270081

THIS REPORT SUPERSEDES ISSUE OF AUGUST 22, 1980 Attachment 2

TECHNICAL EVALUATION REPORT

PRIMARY COOLANT SYSTEM PRESSURE ISOLATION VALVES

DUKE POWER COMPANY
OCONEE UNITS 1, 2, AND 3

NRC DOCKET NO. 50-269, 50-270, 50-287

NRC TAC NO. 12884, 12885, 12886 FRC PROJECT C5257

NRC CONTRACT NO. NRC-03-79-118 FRC TASK 218, 219, 220

Prepared by

Franklin Research Center
The Parkway at Twentieth Street
Philadelphia, PA 19103

Author: P. N. Noell
T. C. Stilwell
FRC Group Leader: P. N. Noell

Prepared for

Nuclear Regulatory Commission
Washington, D.C. 20555

Lead NRC Engineer: P. J. Polk

October 24, 1980

This report was prepared as an account of work sponsored by an agency of the United States Government. Neither the United States Government nor any agency thereof, or any of their employees, makes any warranty, expressed or implied, or assumes any legal liability or responsibility for any third party's use, or the results of such use, of any information, apparatus, product or process disclosed in this report, or represents that its use by such third party would not infringe privately owned rights.

Franklin Research Center
A Division of The Franklin Institute
The Benjamin Franklin Parkway, Phila., Pa. 19103 (215) 448-1000

8104270256

1.0 INTRODUCTION

The NRC has determined that certain isolation valve configurations in systems connecting the high-pressure Primary Coolant System (PCS) to lower-pressure systems extending outside containment are potentially significant contributors to an intersystem loss-of-coolant accident (LOCA). Such configurations have been found to represent a significant factor in the risk computed for core melt accidents.

The sequence of events leading to the core melt is initiated by the concurrent failure of two in-series check valves to function as a pressure isolation barrier between the high-pressure PCS and a lower-pressure system extending beyond containment. This failure can cause an overpressurization and rupture of the low-pressure system, resulting in a LOCA that bypasses containment.

The NRC has determined that the probability of failure of these check valves as a pressure isolation barrier can be significantly reduced if the pressure at each valve is continuously monitored, or if each valve is periodically inspected by leakage testing, ultrasonic examination, or radiographic inspection. The NRC has established a program to provide increased assurance that such multiple isolation barriers are in place in all operating Light Water Reactor plants designated by DOR Generic Implementation Activity B-45.

In a generic letter of February 23, 1980, the NRC requested all licensees to identify the following valve configurations which may exist in any of their plant systems communicating with the PCS: 1) two check valves in series or 2) two check valves in series with a motor-operated valve (MOV).

For plants in which valve configurations of concern are found to exist, licensees were further requested to indicate: 1) whether, to ensure integrity of the various pressure isolation check valves, continuous surveillance or periodic testing was currently being conducted, 2) whether any check valves of concern were known to lack integrity, and 3) whether plant procedures should be revised or plant modifications be made to increase reliability.

Franklin Research Center (FRC) was requested by the NRC to provide technical assistance to NRC's B-45 activity by reviewing each licensee's submittal

against criteria provided by the NRC and by verifying the licensee's reported findings from plant system drawings. This report documents FRC's technical review.

2.0 CRITERIA

2.1 Identification Criteria

For a piping system to have a valve configuration of concern, the following five items must be fulfilled:

1) The high-pressure system must be connected to the Primary Coolant System;

2) there must be a high-pressure/low-pressure interface present in the line;

3) this same piping must eventually lead outside containment;

4) the line must have one of the valve configurations shown in Figure 1; and

5) the pipe line must have a diameter greater than 1 inch.

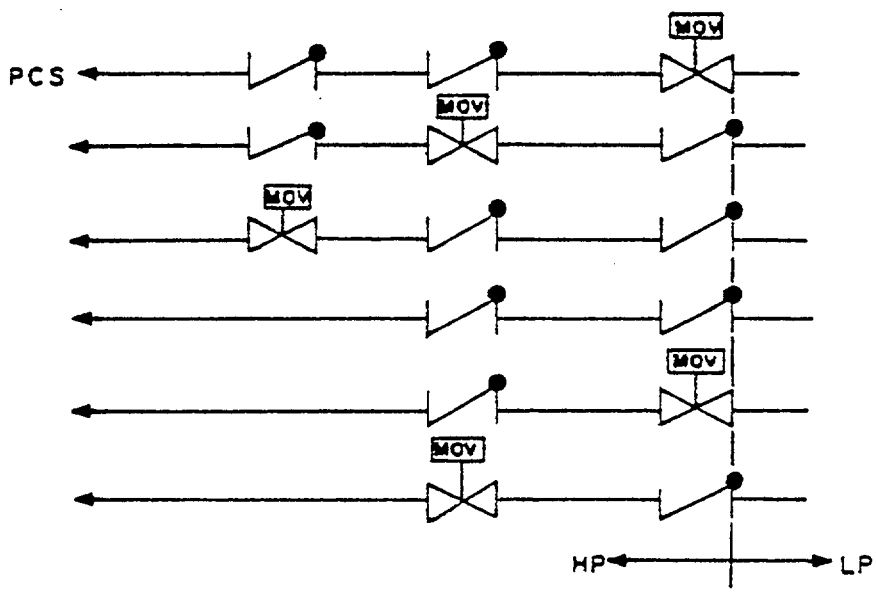

Figure 1. Valve Configurations Designated by the NRC To Be Included in This Technical Evaluation

2.2 Periodic Testing Criteria

For licensees whose plants have valve configurations of concern and choose to institute periodic valve leakage testing, the NRC has established criteria for frequency of testing, test conditions, and acceptable leakage rates. These criteria may be summarized as follows:

2.2.1 Frequency of Testing

Periodic hydrostatic leakage testing* on each check valve shall be accomplished every time the plant is placed in the cold shutdown condition for refueling, each time the plant is placed in a cold shutdown condition for 72 hours if testing has not been accomplished in the preceding 9 months, each time any check valve may have moved from the fully closed position (i.e., any time the differen- tial pressure across the valve is less than 100 psig), and prior to returning the valve to service after maintenance, repair, or replacement work is performed.

2.2.2 Hydrostatic Pressure Criteria

Leakage tests involving pressure differentials lower than function pressure differentials are permitted in those types of valves in which service pressure will tend to diminish the overall leakage channel opening, as by pressing the disk into or onto the seat with greater force. Gate valves, check valves, and globe-type valves, having function pressure differential applied over the seat, are examples of valve applications satisfying this requirement. When leakage tests are made in such cases using pressures lower than function maximum pressure differential, the observed leakage shall be adjusted to function maximum pressure differential value. This adjustment shall be made by calculation appropriate to the test media and the ratio between test and function pressure differential, assuming leakage to be directly proportional to the pressure differential to the one-half power.

2.2.3 Acceptable Leakage Rates:

- Leakage rates less than or equal to 1.0 gpm are considered acceptable.
- Leakage rates greater than 1.0 gpm but less than or equal to 5.0 gpm are considered acceptable if the latest measured rate has not exceeded the rate determined by the previous test by an amount

*To satisfy ALARA requirements, leakage may be measured indirectly (as from the performance of pressure indicators) if accomplished in accordance with approved procedures and supported by computations showing that the method is capable of demonstrating valve compliance with the leakage criteria.

that reduces the margin between measured leakage rate and the maximum permissible rate of 5.0 gpm by 50% or greater.

- Leakage rates greater than 1.0 gpm but less than or equal to 5.0 gpm are considered unacceptable if the latest measured rate exceeded the rate determined by the previous test by an amount that reduces the margin between measured leakage rate and the maximum permissible rate of 5.0 gpm by 50% or greater.
- Leakage rates greater than 5.0 gpm are considered unacceptable.

3.0 TECHNICAL EVALUATION

3.1 Licensee's Response to the Generic Letter

In response to the NRC's generic letter [Ref. 1], the Duke Power Company (DPC) described in Reference 2 the valve configuration of concern as having two check valves in series with a single, normally closed, motor-operated valve (MOV.)

In a supplemental response, dated April 11, 1980, to the same NRC generic letter [Ref. 1], DPC futher explained the existing valve arrangement of concern:

"As stated in our previous response, the low pressure portion of each low pressure injection line at Oconee is isolated from the Reactor Coolant System (RCS) by two check valves inside containment and a normally-closed motor-operated valve (MOV) outside containment. The break between high and low pressure piping occurs at the MOV."

The Licensee also indicated in this April 11, 1980 response that "Neither continuous surveillance nor periodic testing is being accomplished currently. However, the check valves in question have exhibited no lack of integrity."

It is FRC's understanding that, with DPC's concurrence, the NRC will direct DPC to change its Plant Technical Specifications as necessary to ensure that periodic leakage testing (or equivalent testing) is conducted in accordance with the criteria of Section 2.2.

3.2 FRC Review of Licensee's Response

FRC has reviewed the licensee's response against the plant-specific Piping

and Instrumentation Diagrams (P&IDs) [Ref. 3] that might have the valve configurations of concern.

FRC has also reviewed the efficacy of instituting periodic testing for the check valves involved in this particular application with respect to the reduction of the probability of an intersystem LOCA in the Low-Pressure Injection pipe lines.

In its review of the P&IDs [Ref. 3] for Oconee Units 1, 2, and 3, FRC found the following piping system to be of concern:

> The Low-Pressure Injection System (LPIS) for Oconee Units 1, 2, and 3 is composed of two piping branches (A and B), both leading directly into the reactor vessel. As described previously by the licensee, each branch has two check valves and a motor-operated valve, normally closed (n.c.), in one of the series configurations of concern with the high-pressure/low-pressure interface on the upstream side of the single MOV. The valves involved in this discussion are listed below for Oconee Units 1, 2, and 3:

Low-Pressure Injection System

	Branch A	Branch B
Unit 1		
high-pressure check valve	CF-12	CF-14
high-pressure check valve	LP-47	LP-48
high-pressure MOV, n.c.	LP-18	LP-17
Unit 2		
high-pressure check valve	2CP-12	2CP-14
high-pressure check valve	2LP-47	2LP-48
high-pressure MOV, n.c.	2LP-18	2LP-17
Unit 3		
high-pressure check valve	3CP-12	3CF-14
high-pressure check valve	3LP-47	3LP-48
high-pressure MOV, n.c.	3LP-18	3LP-17

In accordance with the criteria of Section 2.0, FRC found no other valve configurations of concern existing in this plant. These findings confirm the licensee's response [Ref. 2].

FRC reviewed the effectiveness of instituting periodic leakage testing of the check valves in these lines as a means of reducing the probability of an intersystem LOCA occurring. FRC found that introducing a program of check valve leakage testing in accordance with the criteria summarized in Section 2.0 will be an effective measure in substantially reducing the probability of an intersystem LOCA occurring in these lines and a means of increasing the probability that these lines will be able to perform their safety-related functions. It is also a step toward achieving a corresponding reduction in the plant probability of an intersystem LOCA in Oconee Units 1, 2 and 3.

4.0 CONCLUSION

Oconee Units 1, 2, and 3 have been determined to have valves in one of the configurations of concern in both branches of each respective Unit Low-Pressure Injection System.

If DPC modifies the Plant Technical Specification for Oconee Units 1, 2, and 3 to incorporate periodic testing (as delineated in Section 2.2) for the check valves itemized in Table 1.0, then FRC considers this an acceptable means of achieving plant compliance with the NRC staff objectives of Reference 1.

Table 1.0

Primary Coolant System Pressure Isolation Valves

System	Check Valve No.	Allowable Leakage*
Low-Pressure Injection		
Unit 1		
Branch A	CF-12 LP-47	
Branch B	CF-14 LP-48	
Unit 2		
Branch A	2CF-12 2LP-47	

*To be provided by licensee at a future date in accordance with Section 2.2.3.

Branch B	2CF-14 2CF-48
Unit 3	
Branch A	3CF-12 3LP-47
Branch B	3CF-14 3LP-48

5.0 REFERENCES

[1]. Generic NRC letter, dated 2/23/80, from Mr. D. G. Eisenhut, Department of Operating Reactors (DOR), to Mr. W. O. Parker, Jr., Duke Power Company (DPC).

[2]. Duke Power Company's response to NRC's letter, dated 3/13/80, from Mr. W. O. Parker, Jr., (DPC) to Mr. D. G. Eisenhut (DOR).

[3]. List of examined P&IDs:

Duke Power Company's Drawings of Oconee Units 1, 2, and 3:

PO-100A-1, (Rev. 18)
PO-100A-2, (Rev. 15)
PO-100A-3, (Rev. 16)
PO-101-A-1, (Rev. 21)
PO-101-A-2, (Rev. 14)
PO-101-A-3, (Rev. 14)
PO-102A-1, (Rev. 34)
PO-102A-2, (Rev. 20)
PO-102A-3, (Rev. 24)
PO-101B-1, (Rev. 25)
PO-101B-2, (Rev. 24)
PO-101B-3, (Rev. 24)
PO-110A-1, (Rev. 29)
PO-110A-3, (Rev. 18)
PO-120A, (Rev. 12)

ATTACHMENT TO ORDER FOR MODIFICATION OF

FACILITY OPERATING LICENSES NOS. DPR-38, DPR-47 AND DPR-55

DOCKETS NOS. 50-269, 50-270 AND 50-287

Replace the following pages of the Appendix "A" Technical Specifications with the enclosed pages. The revised pages contain vertical lines indicating the area of change.

3.1-14

3.1-14a (new)

3.1-15

3.1-16

4.5-1

4.5-2

4.5-3

4.5-4

There are no changes to pages 3.1-16, 4.5-1 and 4.5-4. They are provided to maintain document completeness.

8104270264

3.1.6 Leakage

Specification

3.1.6.1 If the total reactor coolant leakage rate exceeds 10 gpm, the reactor shall be shutdown within 24 hours of detection.

3.1.6.2 If unidentified reactor coolant leakage (excluding normal evaporative losses) exceeds 1 gpm or if any reactor coolant leakage is evaluated as unsafe, the reactor shall be shutdown within 24 hours of detection.

3.1.6.3 If any reactor coolant leakage exists through a non-isolable fault in a RCS strength boundary (such as the reactor vessel, piping, valve body, etc., except the steam generator tubes), the reactor shall be shutdown, and cooldown to the cold shutdown condition shall be initiated within 24 hours of detection.

3.1.6.4 If at any time, the leakage through the Unit 1 steam generator tubes equals or exceeds 0.3 gpm, a reactor shutdown shall be initiated within 4 hours and the reactor shall be in a cold condition within the next 36 hours. If the leakage is less than 0.3 gpm, an assessment shall be made whether operations may be continued safely or the plant should be shutdown. In either case, the NRC shall be notified in accordance with Section 6.6.2.1.

3.1.6.5 If reactor shutdown is required by Specification 3.1.6.1, 3.1.6.2 or 3.1.6.3, the rate of shutdown and the conditions of shutdown shall be determined by the safety evaluation for each case and justified in writing as soon thereafter as practicable.

3.1.6.6 Action to evaluate the safety implication of reactor coolant leakage shall be initiated within 4 hours of detection. The nature, as well as the magnitude, of the leak shall be considered in this evaluation. The safety evaluation shall assure that the exposure of offsite personnel to radiation is within the guidelines of 10 CFR 20.

3.1.6.7 If reactor shutdown is required per Specification 3.1.6.1, 3.1.6.2, 3.1.6.3 or 3.1.6.4, the reactor shall not be restarted until the leak is repaired or until the problem is otherwise corrected.

3.1.6.8 When the reactor is critical and above 2% power, two reactor coolant leak detection systems of different operating principles shall be operable, with one of the two systems sensitive to radioactivity. The systems sensitive to radioactivity may be out-of-service for 48 hours provided two other means to detect leakage are operable.

3.1.6.9 Loss of reactor coolant through reactor coolant pump seals and system valves to connecting systems which vent to the gas vent header and from which coolant can be returned to the reactor coolant system shall not be considered as reactor coolant leakage and shall not be subject to the consideration of Specifications 3.1.6.1, 3.1.6.2, 3.1.6.3, 3.1.6.4, 3.1.6.5, 3.1.6.6 or 3.1.6.7 except that such losses when added to leakage shall not exceed 30 gpm.

3.1.6.10

a. The maximum allowable leakage for valves CF-12, CF-14, LP-47 and LP-48 shall be as follows:

1. Leakage rates less than or equal to 1.0 gpm are considered acceptable.

2. Leakage rates greater than 1.0 gpm but less than or equal to 5.0 gpm are considered acceptable if the latest measured rate has not exceeded the rate determined by the previous test by an amount that reduces the margin between measured leakage rate and the maximum permissible rate of 5.0 gpm by 50% or greater.

3. Leakage rates greater than 1.0 gpm but less than or equal to 5.0 gpm are considered unacceptable if the latest measured rate exceeded the rate determined by the previous test by an amount that reduces the margin between measured leakage rate and the maximum permissible rate of 5.0 gpm by 50% or greater.

4. Leakage rates greater than 5.0 gpm are considered unacceptable.

b. Minimum differential test pressure shall not be less than 150 psid.

c. All pressure isolation valves listed in Section 4.5.1.2.3 shall be functional as a pressure isolation device, except as specified in 3.1.6.10.d. Valve leakage shall not exceed the amounts in Section 3.1.6.10.a.

d. In the event that integrity of any pressure isolation valve in Section 4.5.1.2.3 cannot be demonstrated, reactor operation may continue, provided that at least two valves in each high pressure line having a non-functional valve are in, and remain in, the mode corresponding to the isolated condition. (Motor operated valves shall be placed in the closed position and power supplies deenergized).

e. If 3.1.6.10.c and d. cannot be met, an orderly shutdown shall be initiated and the reactor shall be in the cold shutdown condition within 24 hours.

Bases

Every reasonable effort will be made to reduce reactor coolant leakage including evaporative losses (which may be on the order of .5 gpm) to the lowest possible rate and at least below 1 gpm in order to prevent a large leak from masking the presence of a smaller leak. Water inventory balances, radiation monitoring equipment, boric acid crystalline deposits, and physical inspections can disclose reactor coolant leaks. Any leak of radioactive fluid, whether from the reactor coolant system primary boundary or not can be a serious problem with respect to in-plant radioactivity contamination and cleanup or it could develop into a still more serious problem; and therefore, first indications of such leakage will be followed up as soon as practicable.

Although some leak rates on the order of GPM may be tolerable from a dose point of view, especially if they are to closed systems, it must be recognized that leaks in the order of drops per minute through any of the walls of the primary system could be indicative of materials failure such as by stress corrosion cracking. If depressurization, isolation and/or other safety measures are not taken promptly, these small breaks could develop into much larger leaks, possibly into a gross pipe rupture. Therefore, the nature of the leak, as well as the magnitude of the leakage must be considered in the safety evaluation.

When the source of leakage has been identified, the situation can be evaluated to determine if operation can safely continue. This evaluation will be performed by the Operating Staff and will be documented in writing and approved by the Superintendent. Under these conditions, an allowable reactor coolant system leakage rate of 10 gpm has been established. This explained leakage rate of 10 gpm is also well within the capacity of one high pressure injection pump and makeup would be available even under the loss of off-site power condition.

If leakage is to the reactor building it may be identified by one or more of the following methods:

a. The reactor building air particulate monitor is sensitive to low leak rates. The rates of reactor coolant leakage to which the instrument is sensitive are .10 gpm to greater than 30 gpm, assuming corrosion product activity and no fuel cladding leakage. Under these conditions, an increase in coolant leakage of 1 gpm is detectable within 10 minutes after it occurs.

b. The iodine monitor, gaseous monitor and area monitor are not as sensitive to corrosion product activity.(1) It is calculated that the iodine monitor is sensitive to an 8 gpm leak and the gaseous monitor is sensitive to a 230 gpm leak based on the presence of tramp uranium (no fission products from tramp uranium are assumed to be present). However, any fission products in the coolant will make these monitors more sensitive to coolant leakage.

c. In addition to the radiation monitors, leakage is also monitored by a level indicator in the reactor building normal sump. Changes in normal sump level may be indicative of leakage from any of the systems located inside the reactor building such as reactor coolant system, low pressure service water system, component cooling system and steam and feedwater lines or condensation of humidity within the reactor building atmosphere. The sump capacity is 15 gallons per inch of height and each graduation on the level indicates 1/2 inch of sump height. This indicator is capable of detecting changes on the order of 7.5 gallons of leakage into the sump. A 1 gpm leak would therefore be detectable within less than 10 minutes.

d. Total reactor coolant system leakage rate is periodically determined by comparing indications of reactor power, coolant temperature, pressurizer water level and letdown storage tank level over a time interval. All of these indications are recorded. Since the pressurizer level is maintained essentially constant by the pressurizer level controller, any coolant leakage is replaced by coolant from the letdown storage tank resulting in a tank level decrease. The letdown storage tank capacity is 31 gallons per inch of height and each graduation on the level recorder represents 1 inch of tank height. This inventory monitoring method is capable of detecting changes on the order of 31 gallons. A 1 gpm leak would therefore be detectable within approximately one half hour.

As described above, in addition to direct observation, the means of detecting reactor coolant leakage are based on 2 different principles, i.e., activity, sump level and reactor constant inventory measurements. Two systems of different principles provide, therefore, diversified ways of detecting leakage to the reactor building.

The upper limit of 30 gpm is based on the contingency of a complete loss of station power. A 30 gpm loss of water in conjunction with a complete loss of station power and subsequent cooldown of the reactor coolant system by the turbine bypass system (set at 1,040 psia) and steam driven emergency feedwater pump would require more than 60 minutes to empty the pressurizer from the combined effect of system leakage and contraction. This will be ample time to restore electrical power to the station and makeup flow to the reactor coolant system.

REFERENCES

FSAR Section 11.1.2.4.1

4.5 EMERGENCY CORE COOLING SYSTEMS AND REACTOR BUILDING COOLING SYSTEM PERIODIC TESTING

4.5.1 Emergency Core Cooling Systems

Applicability

Applies to periodic testing requirements for the Emergency Core Cooling Systems.

Objective

To verify that the Emergency Core Cooling Systems are operable.

Specification

4.5.1.1 System Tests

4.5.1.1.1 High Pressure Injection System

a. During each refueling outage, a system test shall be conducted to demonstrate that the system is operable. A test signal will be applied to demonstrate actuation of the High Pressure Injection System for emergency core cooling operation.

b. The test will be considered satisfactory if control board indication verifies that all components have responded to the actuation signal properly; all appropriate pump breakers shall have opened or closed and all valves shall have completed their travel.

4.5.1.1.2 Low Pressure Injection System

a. During each refueling outage, a system test shall be conducted to demonstrate that the system is operable. The test shall be performed in accordance with the procedure summarized below:

   (1) A test signal will be applied to demonstrate actuation of the Low Pressure Injection System for emergency core cooling operation.

   (2) Verification of the engineered safety features function of the Low Pressure Service Water System which supplies cooling water to the low pressure coolers shall be made to demonstrate operability of the coolers.

b. The test will be considered satisfactory if control board indication verifies that all components have responded to the actuation signal properly; all appropriate pump breakers shall have opened or closed, and all valves shall have completed their travel.

4.5.1.1.3 Core Flooding System

a. During each refueling outage, a system test shall be conducted to demonstrate proper operation of the system. During pressurization of the

Reactor Coolant System, verification shall be made that the check and isolation valves in the core flooding tank discharge lines operate properly.

b. The test will be considered satisfactory if control board indication of core flood tank level verifies that all valves have opened.

4.5.1.2 Component Tests

4.5.1.2.1 Pumps

Quarterly, the high pressure and low pressure injection pumps shall be started and operated to verify proper operation. Acceptable performance will be indicated if the pump starts, operates for 15 minutes, and the discharge pressure and flow are within ± 10 percent of a point on the pump head curve. (Figures 4.5.1-1 and 4.5.1-2).

4.5.1.2.2 Valves - Power Operated

a. Quarterly, each Engineered Safety Features valve in the Emergency Core Cooling Systems, except LP-17, -18, and each Engineered Safety Features valve associated with emergency core cooling in the Low Pressure Service Water System shall be tested to verify operability. LP-17, -18 shall only be tested every cold shutdown unless previously tested during the current quarter.

b. The acceptable performance of each power-operated valve will be that motion is indicated upon actuation by appropriate signals.

c. During each refueling outage, low pressure injection pump discharge (engineered safety features) valves, low pressure injection discharge throttling valves, and low pressure injection discharge header crossover valves shall be cycled manually to verify the manual operability of these power-operated valves.

4.5.1.2.3 Check Valves

Periodic individual leakage testing (a) of valves CF-12, CF-14, LP-47 and LP-48 shall be accomplished prior to power operation after every time the plant is placed in the cold shutdown condition for refueling, after each time the plant is placed in a cold shutdown condition for 72 hours if testing has not been accomplished in the preceding 9 months, and prior to returning the valve to service after maintenance, repair or replacement work is performed. Whenever integrity of these valves cannot be demonstrated, the integrity of the remaining valve in each high pressure line having a leaking valve shall be determined and recorded daily. In addition, the position of the other closed valve located in the high pressure piping shall be recorded daily. For the allowable leakage rates and limiting conditions for operation, see Technical Specification 3.1.6.10.

Bases

The Emergency Core Cooling Systems are the principle reactor safety features in the event of a loss of coolant accident. The removal of heat from the core provided by these systems is designed to limit core damage.

(a) To satisfy ALARA requirements, leakage may be measured indirectly (as from the performance of pressure indicators) if accomplished in accordance with approved procedures and supported by computations showing that the method is capable of demonstrating valve compliance with the leakage criteria.

The High Pressure Injection System under normal operating conditions has one pump operating. At least once per month, operation is rotated to another high pressure injection pump. This verifies that the high pressure injection pumps are operable.

The requirements of the Low Pressure Service Water System for cooling water are more severe during normal operation than under accident conditions. Rotation of the pump in operation on a monthly basis verifies that two pumps are operable.

The low pressure injection pumps are tested singularly for operability by opening the borated water storage tank outlet valves and the bypass valves in the borated water storage tank fill line. This allows water to be pumped from the borated water storage tank through each of the injection lines and back to the tank.

Testing the manual operability of power-operated valves in the Low Pressure Injection System gives assurance that flow can be established in a timely manner even if the capability to operate a valve from the control room is lost.

With the reactor shut down, the valves in each core flooding line are checked for operability by reducing the Reactor Coolant System Pressure until the indicated level in the core flood tanks verify that the check and isolation valves have opened.

Power Operated Valves LP-17, -18 and Check Valves CF-12, CF-14, LP-47 and LP-48, are boundary valves between high pressure and low pressure design piping. As such, functionally testing of these valves is performed during cold shutdown conditions when the Reactor Coolant System pressure is below the design pressure of the Low Pressure Injection System piping and the potential for over-pressurization of the low pressure system is eliminated.

REFERENCE

(1) FSAR, Section 6

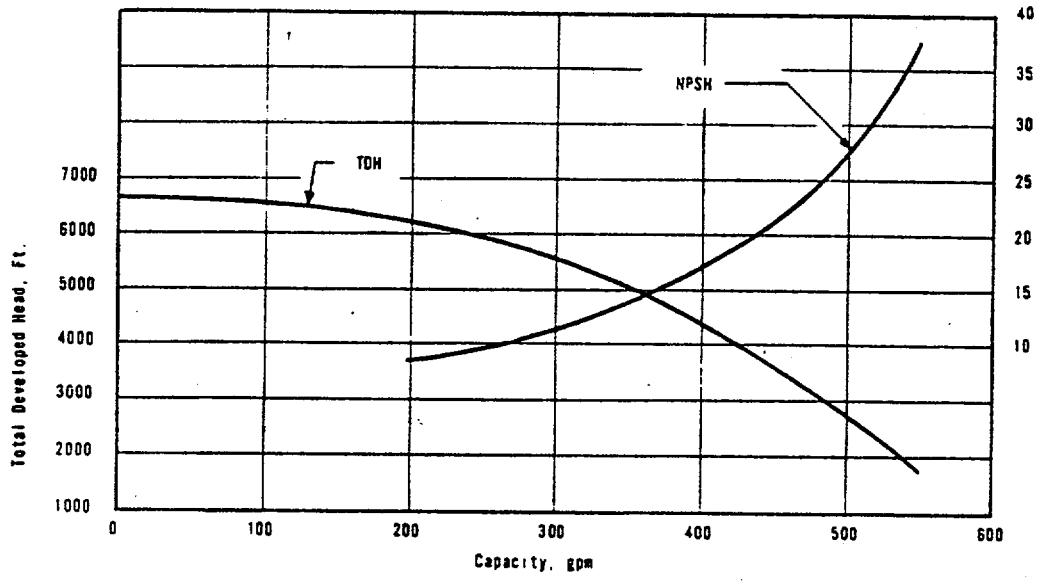

HIGH PRESSURE INJECTION
PUMP CHARACTERISTICS

OCONEE NUCLEAR STATION

Figure 4.5.1-1