Research Reactor Center
University of Missouri-Columbia

Research Park
Columbia, MO 65211

PHONE (573) 882-4211
FAX (573) 882-6360

1 pp B

March 2, 2001

U.S. Nuclear Regulatory Commission
ATTN: Mr. Alexander Adams, Jr., REXB
Sr. Project Manager
Mail Stop O12-D3
Washington DC 20555-0001

SUBJECT: Control Room Print Book (created 12/08/93)
Reprinted February 19, 2001 (includes Revision 1 though 26)

Dear Al,

Enclosed is the reprinted edition of the Control Room Print Book which includes Revision 1 through 26. Please return or destroy your old bound copy as it is now obsolete.

Should you have any questions, please call me at (573) 882-5264.

Sincerely,

Paul S. Hobbs, PE
Reactor Manager

:ls
enclosures

B/6

AN EQUAL OPPORTUNITY/ADA INSTITUTION

ASSIGNMENT SHEET

UNIVERSITY OF MISSOURI
RESEARCH REACTOR FACILITY

CONTROL ROOM PRINT BOOK

Effective Date: 2/22/01

NUMBER 4

IS ASSIGNED AS FOLLOWS:

Alexander Adams, Jr.

NRC

CONTROL ROOM PRINT BOOK

Effective Date: 2/22/01

Revision No.	Date Filed	Revision No.	Date Filed	Revision No.	Date Filed
26	ISSUED NEW BOOKS				

Perfecting the Art and Science of *Nuclear Medicine*

MURR

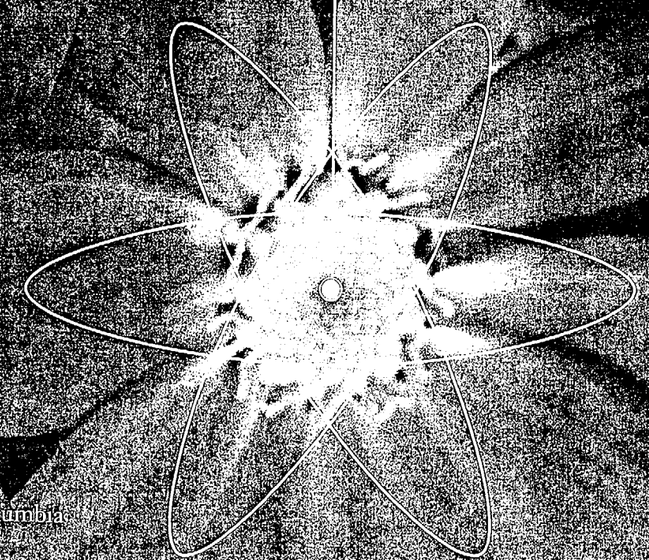

University of Missouri-Columbia
Research Reactor Center

PrintIndex
Created: 12/08/1993

Revision # 26
Revision Date: 2/19/2001

Approved: _____
Reactor Manager

Page Number	MURR Print Number	Sheet Number	Revision Number	Revision Date	TITLE OF DRAWING
1	22	1 of 1	11	12-19-00	Facility Air Supply
2	41	1 of 3	20	12-04-00	Process Instrumentation Control & Interlock
3	41	2 of 3	18	9-16-00	Process Instrumentation Control & Interlock
4	41	3 of 3	25	9-14-00	Process Instrumentation Control & Interlock
5	42	1 of 2	32	11-17-00	Reactor Control System
6	42	2 of 2	29	1-05-00	Reactor Control System
7	79	1 of 1	14	11-23-00	Annunciator
8	138	1 of 2	31	9-21-00	Annunciator Control
9	139	1 of 1	21	11-23-00	Safety System
10	140	1 of 1	13	4-06-98	Rod Run-In System
11	156	1 of 1	25	3-25-99	Piping & Instrument Diagram
12	172	1 of 1	13	10-26-00	Pneumatic Control System
13	203	1 of 1	12	11-30-00	Area Rad Monitoring System
14	344	1 of 1	13	12-05-98	Demineralizer-Regenerator Piping Diagram DI-200 Series
15	502	1 of 1	23	1-28-99	Secondary Cooling System
16	522	1 of 2	18	10-20-98	Electrical Distribution
17	522	2 of 2	7	2-09-01	Electrical Distribution
18	523	1 of 1	16	12-19-00	Liquid Radioactive Waste Disposal System & Waste Tank Pump Controls
19	895	1 of 1	8	3-14-98	Fan Failure Warning System Schematic
20	911	1 of 1	13	7-29-97	Deionized Water System
21	956	1 of 1	8	1-03-01	Secondary Low Sump Cutout
22	1091	1 of 2	9	12-19-00	Domestic Cold Water
23	1386	1 & 2 of 14	3	9-01-92	Relay Schedule
24	1386	3 & 4 of 14	3	9-01-92	Relay Schedule
25	1386	5 & 6 of 14	3	9-01-92	Relay Schedule
26	1386	7 & 8 of 14	3	9-01-92	Relay Schedule
27	1386	9 & 10 of 14	3	9-01-92	Relay Schedule
28	1386	11 & 12 of 14	3	9-01-92	Relay Schedule
29	1386	13 & 14 of 14	3	9-01-92	Relay Schedule
30	2324	1 of 1	2	11-10-00	Valve Operation & Air System
31	2325	1 of 1	2	1-04-96	Pressurizer / Nitrogen System
32	2391	1 of 1	5	10-19-00	Steam and Condensate System
33	2432	1 of 1	3	3-22-99	Auxiliary Heat System
34	2439	1 of 1	3	11-07-99	Fire Line Loop at the Research Reactor Center
35	2522	1 of 1	0	4-07-99	Murr Print Legend Symbols and Abbreviations

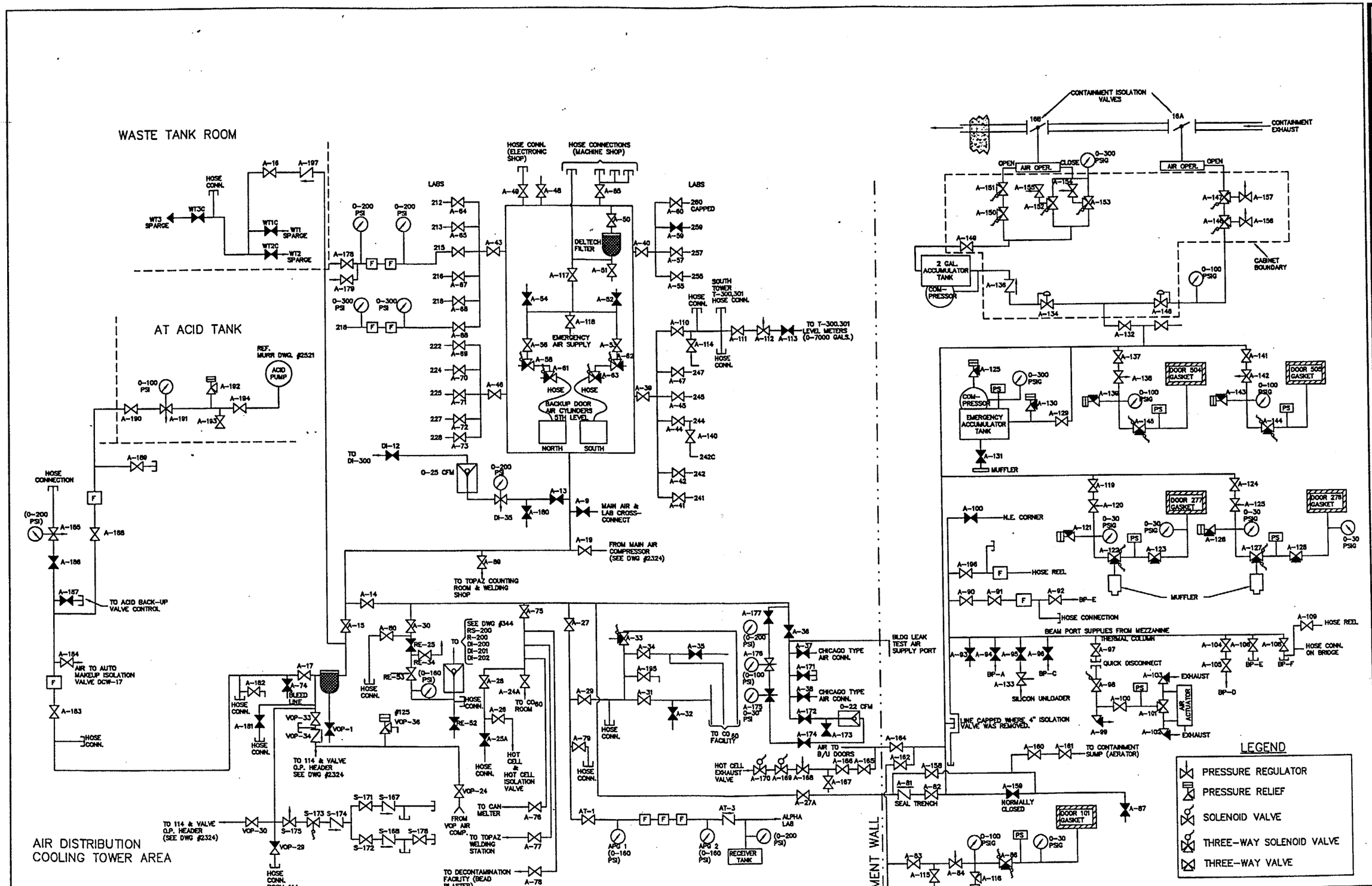

REV.#	DESCRIPTION	DR. BY	DATE
11	UPDATED FOR CONTROL ROOM	JCA	12/19/00
10	REVISED PER CONDITION ASSESMENT	DGN	1/15/99
9	REVISED PER CONTROL ROOM	JDR	8/19/98
8	REVISED PER MOD. PKG 97-2	JDR	1/5/98
7	REVISED AND UPDATED ON CAD	JDR	5/19/97

seal

DATE: 5/19/97
DRAWN BY: J.RILEY
CHECKED BY: ENGINEER:
CODE:
REVISION NUMBER: 7
REVISION DATE: 5/19/97

UNIVERSITY OF MISSOURI—COLUMBIA
FACILITY OPERATIONS
research reactor facility

FACILITY AIR SUPPLY

MURR NUMBER: 22

SHEET 1 OF 1

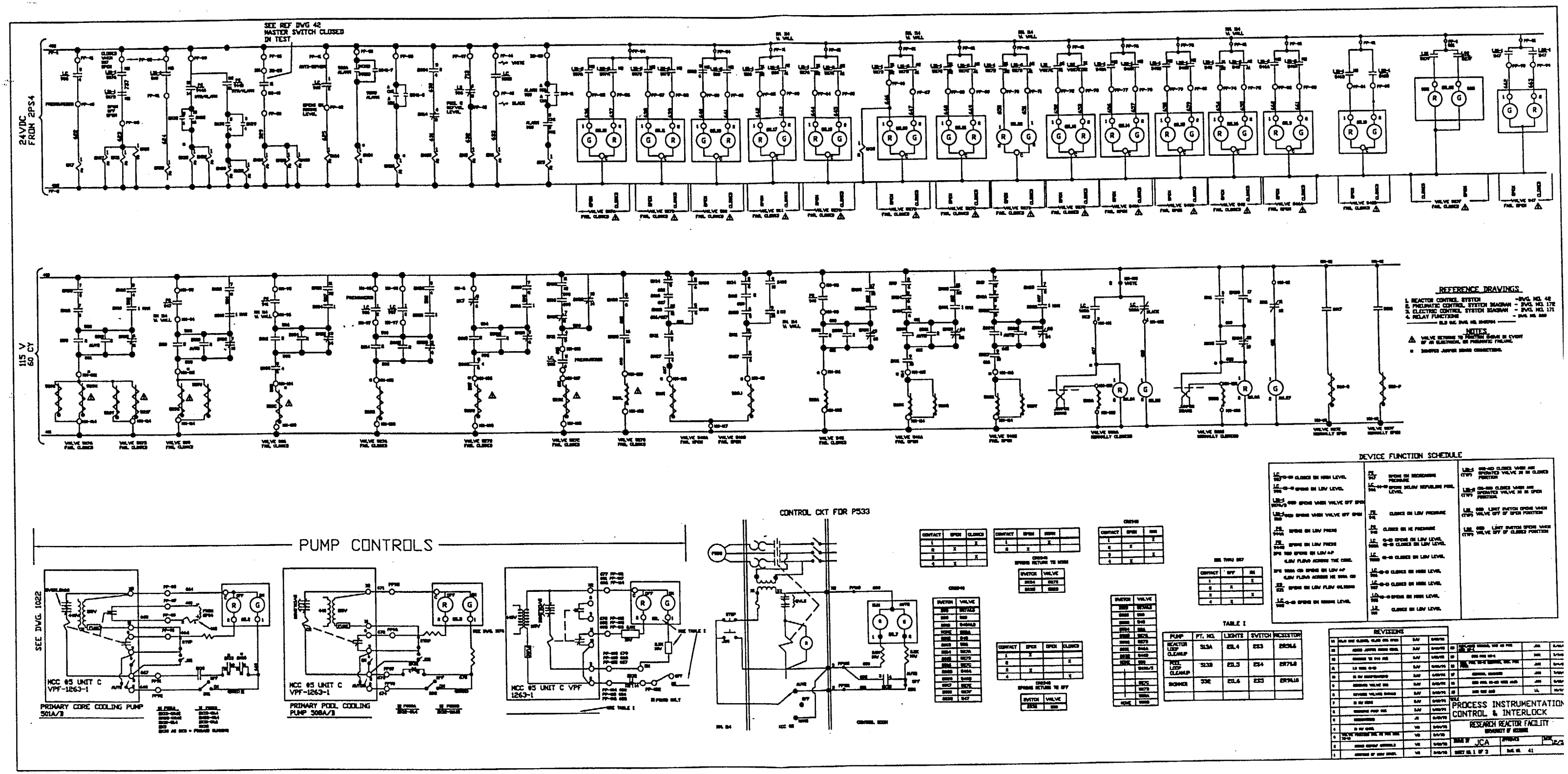
24VDC FROM 2PS4
SEE REF DWG 42 MASTER SWITCH CLOSED IN TEST
115 V 60 CY
REFERENCE DRAWINGS
1. REACTOR CONTROL SYSTEM - DWG. NO. 42
2. PNEUMATIC CONTROL SYSTEM DIAGRAM - DWG. NO. 172
3. ELECTRIC CONTROL SYSTEM DIAGRAM - DWG. NO. 171
4. RELAY FUNCTIONS
NOTES
PUMP CONTROLS
SEE DWG. 1022
HCC #5 UNIT C VPF-1263-1
PRIMARY CORE COOLING PUMP 501A/B
HCC #5 UNIT C VPF-1263-1
PRIMARY POOL COOLING PUMP 508A/B
HCC #5 UNIT C VPF 1263-1
CONTROL CKT FOR P533
DEVICE FUNCTION SCHEDULE
TABLE I
REVISIONS
PROCESS INSTRUMENTATION CONTROL & INTERLOCK
RESEARCH REACTOR FACILITY
UNIVERSITY OF MISSOURI
JCA

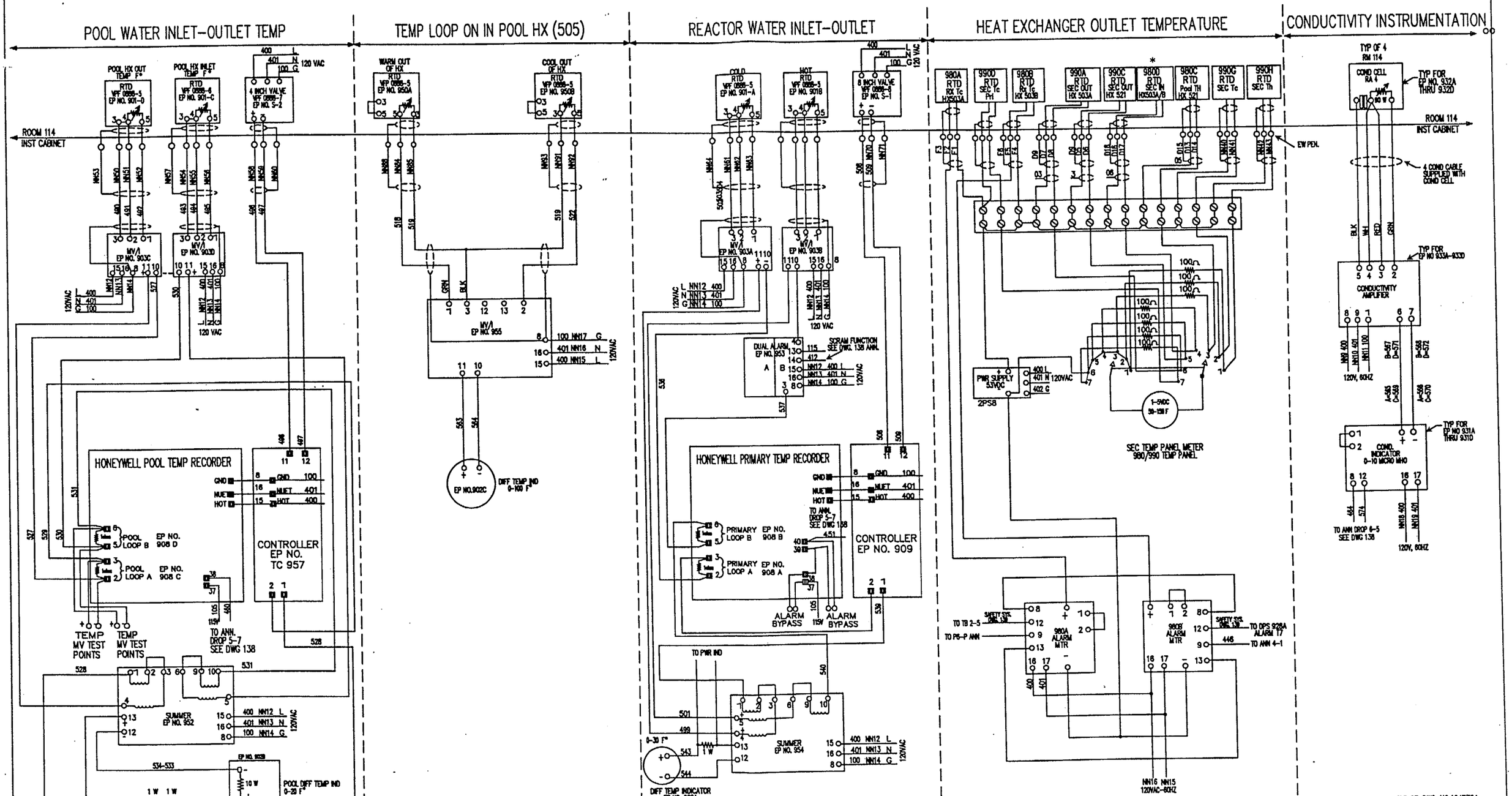

REVISIONS

NO.	DESCRIPTION	Init.	DATE
18	MOD PKG 99-1	JCA	[illegible]
17	Typo errors 980D	THS	[illegible]
16	Redrawn in CAD (MacDraft)	MDR	[illegible]

TITLE
- 10MW -
PROCESS INSTRUMENTATION CONTROL & INTERLOCK
(TEMPERATURE INST.)

RESEARCH REACTOR FACILITY
UNIVERSITY OF MISSOURI

DRAWN BY M. RICHARDSON	APPROVED THS	DATE 02/16/96	
SHEET NO. 2 OF 3	DWG. NO. 41		

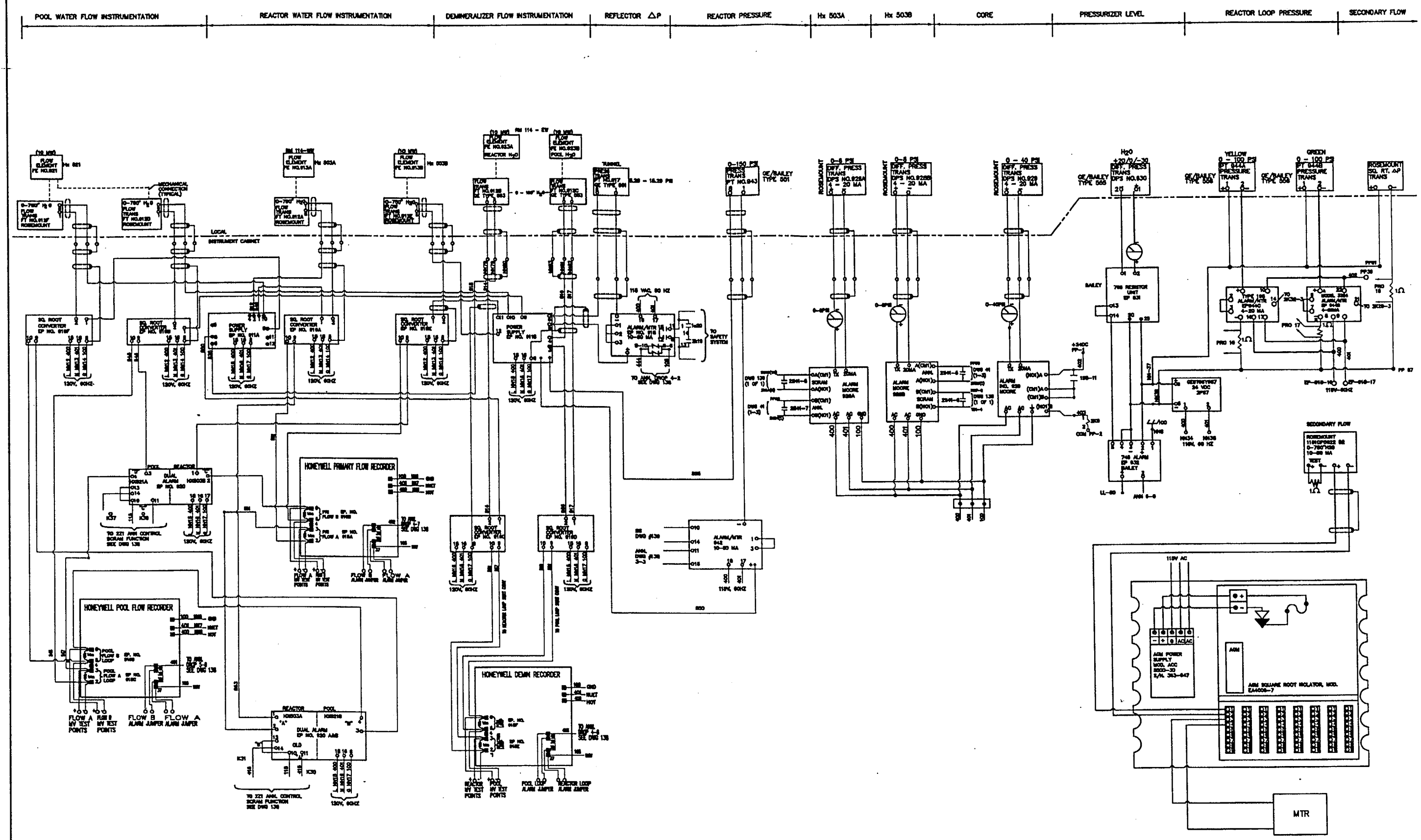

REV. NO.	DESCRIPTION	BY	DATE
25	AS PER MOD 97-1	JCA	12/19/00
24	MOD.PKG. 99-1	JCA	9/14/00
23	MOD.PKG. 99-1	DGN	11/17/99
22	MOD.PKG. 98-1	DGN	12/30/98
21	INSTALLATION OF MOD. PKG. 97-3	JDR	7/15/97
20	GENERAL CHANGES, UPDATED ON CAD	JDR	4/9/97

DATE:

DRAWN BY: J RILEY

CHECKED BY: MCR

ENGINEER:

CODE:

REVISION NUMBER: 20

REVISION DATE: 4/9/97

UNIVERSITY OF MISSOURI–COLUMBIA
FACILITY OPERATIONS
research reactor facility

10 MW PROCESS INSTRUMENTATION CONTROL & INTERLOCK

MURR NUMBER: 41

SHEET 3 of 3

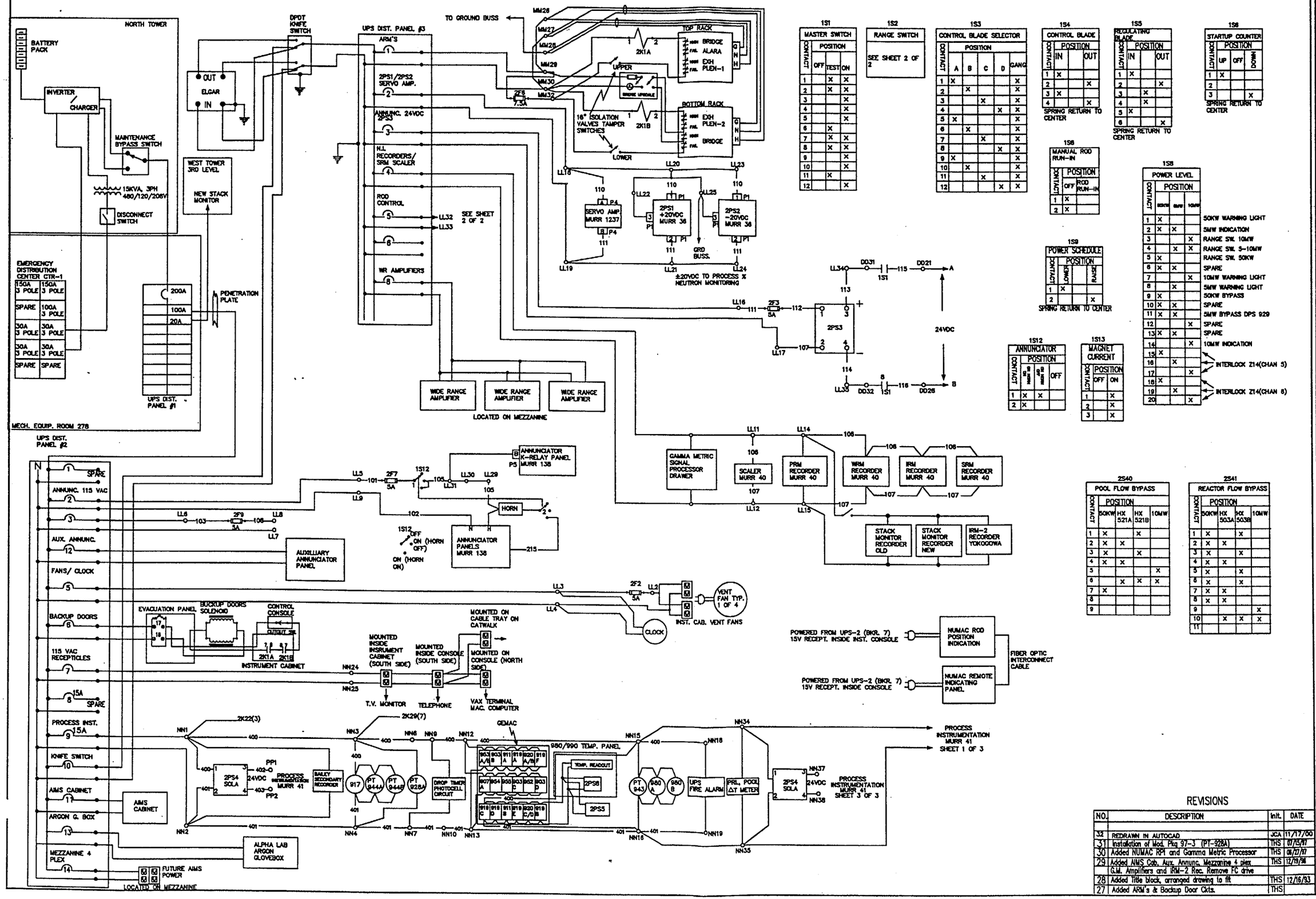

1S1 MASTER SWITCH

CONTACT	POSITION OFF	TEST	ON
1		X	X
2		X	X
3			X
4			X
5			X
6	X		
7		X	X
8	X	X	X
9			X
10			X
11	X		
12			X

1S2 RANGE SWITCH

SEE SHEET 2 OF 2

1S3 CONTROL BLADE SELECTOR

CONTACT	POSITION A	B	C	D	GANG
1	X				X
2		X			X
3			X		X
4				X	X
5	X				X
6		X			X
7			X		X
8				X	X
9	X				X
10		X			X
11			X		X
12				X	X

1S4 CONTROL BLADE

CONTACT	POSITION IN	OUT
1	X	
2		X
3	X	
4		X

SPRING RETURN TO CENTER

1S5 REGULATING BLADE

CONTACT	POSITION IN	OUT
1	X	
2		X
3	X	
4	X	
5	X	
6		X

SPRING RETURN TO CENTER

1S6 STARTUP COUNTER

CONTACT	POSITION UP	OFF	DOWN
1	X		
2			
3			X

SPRING RETURN TO CENTER

1S8 MANUAL ROD RUN-IN

CONTACT	POSITION OFF	ROD RUN-IN
1	X	
2	X	

1S9 POWER SCHEDULE

CONTACT	POSITION LOWER		RAISE
1	X		
2			X

SPRING RETURN TO CENTER

1S5 POWER LEVEL

CONTACT	POSITION 50KW	5MW	10MW	
1	X			50KW WARNING LIGHT
2	X	X		5MW INDICATION
3			X	RANGE SW. 10MW
4		X	X	RANGE SW. 5-10MW
5	X			RANGE SW. 50KW
6	X	X		SPARE
7			X	10MW WARNING LIGHT
8		X		5MW WARNING LIGHT
9	X			50KW BYPASS
10	X	X		SPARE
11	X	X		5MW BYPASS DPS 929
12			X	SPARE
13	X	X		SPARE
14			X	10MW INDICATION
15	X			
16		X		INTERLOCK Z14(CHAN 5)
17			X	
18	X			
19		X		INTERLOCK Z14(CHAN 8)
20			X	

1S12 ANNUNCIATOR

CONTACT	POSITION ON (HORN ON)	ON (HORN OFF)	OFF
1	X	X	
2	X		

1S13 MAGNET CURRENT

CONTACT	POSITION OFF	ON
1		X
2		X
3		X

2S40 POOL FLOW BYPASS

CONTACT	POSITION 50KW	HX 521A	HX 521B	10MW
1	X		X	
2	X	X		
3	X		X	
4	X	X		
5				X
6		X	X	X
7	X			
8				
9				

2S41 REACTOR FLOW BYPASS

CONTACT	POSITION 50KW	HX 503A	HX 503B	10MW
1	X		X	
2	X	X		
3	X		X	
4	X	X		
5	X		X	
6	X		X	
7	X	X		
8	X	X		
9				X
10		X	X	X
11				

REVISIONS

NO.	DESCRIPTION	Init.	DATE
32	REDRAWN IN AUTOCAD	JCA	11/17/00
31	Installation of Mod. Pkg 97-3 (PT-928A)	THS	07/15/97
30	Added NUMAC RPI and Gamma Metric Processor	THS	08/27/97
29	Added AIMS Cab, Aux. Annunc, Mezzanine 4 plex G.M. Amplifiers and IRM-2 Rec. Remove FC drive	THS	12/19/96
28	Added Title block, arranged drawing to fit	THS	12/16/93
27	Added ARM's & Backup Door Ckts.	THS	

DATE: 11/17/00
DRAWN BY: JCA
CHECKED BY: ENGINEER:
CODE:
REVISION NUMBER: 32
REVISION DATE: 11/17/00

UNIVERSITY OF MISSOURI-COLUMBIA
FACILITIES OPERATIONS
research reactor facility

REACTOR CONTROL SYSTEM

MURR NUMBER: 42

SHEET 1 OF 2

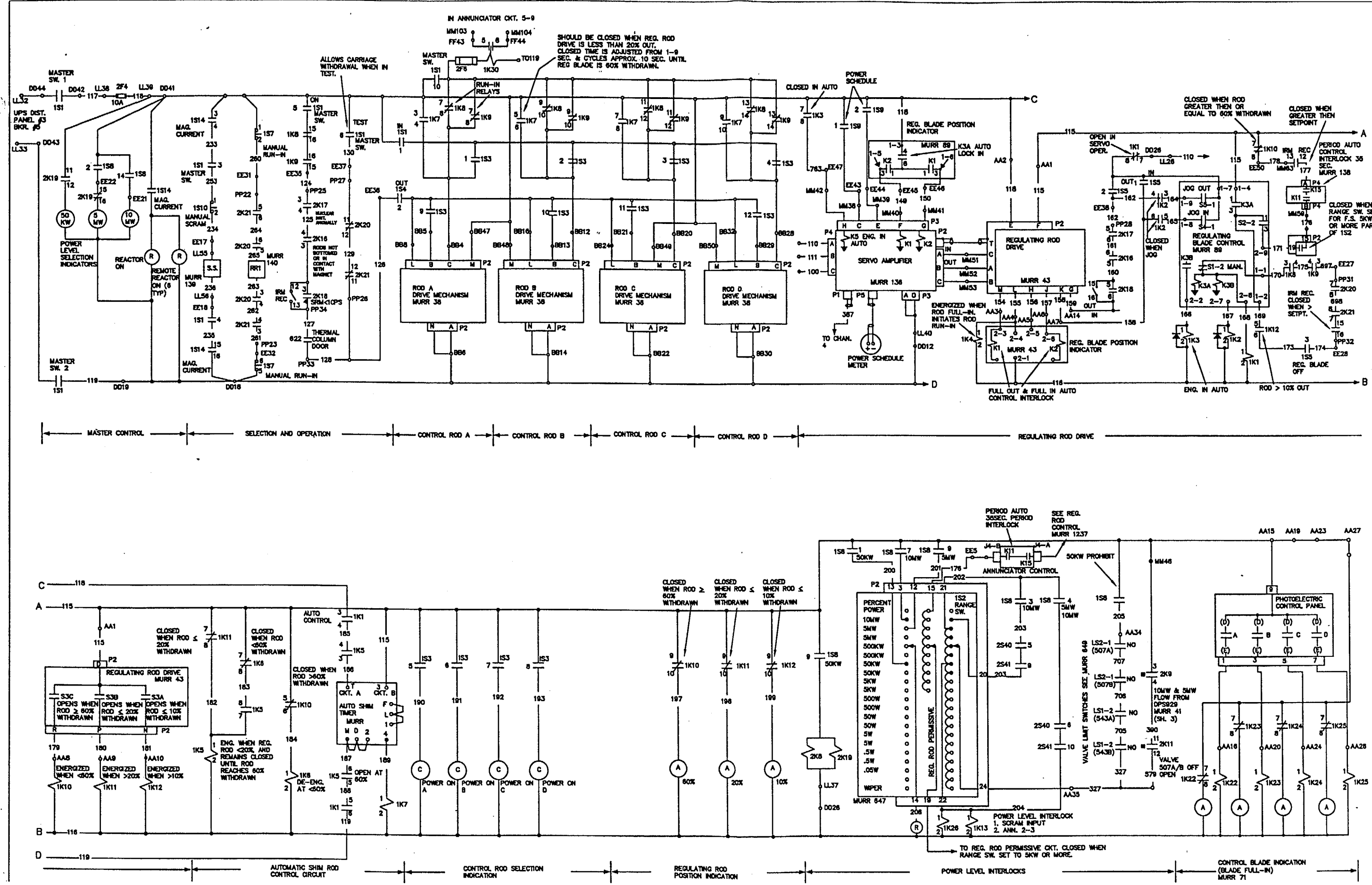

NO.	DESCRIPTION	INIT.	DATE
29	REDRAWN IN AUTOCAD	JCA	1/5/00
28	REMOVED FISSION COUNTER DRIVE	THS	8/27/97
27	ADDED TITLE BLOCK	THS	12/28/93
26	COMPLETELY REDRAWN	THS	7/19/90

seal

DATE: 1/4/01

DRAWN BY: JCA

CHECKED BY: ENGINEER:

CODE:

REVISION NUMBER: 29

REVISION DATE: 1/4/01

UNIVERSITY OF MISSOURI–COLUMBIA
FACILITIES OPERATIONS
research reactor facility

REACTOR CONTROL SYSTEM

MURR NUMBER: 42

SHEET 2 OF 2

34.75

23.6250

CHANNEL 2&3 PERIOD SCRAM (R)	CHANNEL 4, 5&6 HI POWER SCRAM (R)	BLDG AIR PLENUM & BRIDGE HI ACTIVITY SCRAM (R)	CHANNEL 2&3 SHORT PERIOD ROD RUN-IN (B)	CHANNEL 4, 5&6 HI POWER ROD RUN-IN (R)	CHANNEL 1 LO COUNT RATE	OFF GAS HI ACTIVITY	SECONDARY COOLANT HI ACTIVITY	REACTOR LOOP COOLANT HI ACTIVITY	NUCLEAR INSTRUMENT ANOMALY
MANUAL SCRAM (R)	POWER LEVEL INTERLOCK SCRAM (R)	EVACUATION OR ISOLATION SCRAM (R)	TRUCK ENTRY DOOR OPEN ROD RUN-IN (B)	ROD NOT IN CONTACT WITH MAGNET ROD RUN-IN (B)	THERMAL COLUMN DOOR OPEN	WATER TANK T-301 HI OR LOW LEVEL	WATER TANK T-300 HI OR LOW LEVEL	UTILITY TRENCH SEAL WATER LO LEVEL	NITROGEN SYSTEM LO PRESS
REACTOR LOOP LO FLOW SCRAM (R)	PRESSURIZER HI PRESS SCRAM (R)	REACTOR LOOP LOW PRESS SCRAM (R)	REGULATING ROD <= 10% WITHDRAWN ROD RUN-IN (B)	REG ROD BOTTOMED ROD RUN-IN (B)	ROD FULLY INSERTED	REGULATING ROD <= 20% WITHDRAWN	REG BLADE 60 % WITHDRAWN	JUMPER BOARD IN USE	ANTI-SIPHON VENT TANK HI-LO PRESSURE
REACTOR LOOP HI TEMP SCRAM (R)	REFLECTOR HI-LOW DIFF. PRESSURE SCRAM (R)	LOW PRIMARY HX ΔP SCRAM (R)	VENT TANK LO LEVEL ROD RUN-IN (B)	POOL LEVEL LO ROD RUN-IN (B)	REACTOR LOOP IN TEMP	REACTOR LOOP LO FLOW	REACTOR OR LOOP DEMINERALIZER LO FLOW	VALVE S-1 ON LIMIT	REACTOR CONECTIVE VALVE 546A/B OFF CLOSED
PRESSURIZER LO LEVEL SCRAM (R)	POOL LOOP VALVE 509 OFF OPEN SCRAM (R)	POOL LOOP LO FLOW SCRAM (R)	ANTI-SIPHON LINE HI LEVEL ROD RUN-IN (B)	REG BLADE OUT OF AUTO	PUMP 501A/B ON VALVE 507A/B CLOSED	POOL LOOP HI TEMP	POOL LOOP LO FLOW	ROD CONTROL POWER UNAVAILABLE	CHANNEL 4,5, OR 6 DOWNSCALE
POOL BELOW REFUEL LEVEL SCRAM (R)	REFLECTOR VALVE 547 OFF-OPEN	FUEL VAULT INTRUSION	SECONDARY COOLANT LOW FLOW	REACTOR OR POOL LOOP HI COND	PRESSURIZER HI PRESS	PRESSURIZER LOW PRESS	PRESSURIZER WATER HI LEVEL	PRESSURIZER WATER LO LEVEL	FLASHER

ANNUNCIATOR SEQUENCE

CONDITION	TROUBLE CONTACT	NAMEPLATE SIGNAL LAMPS	AUDIBLE SIGNAL
NORMAL	NORMAL-CLOSED	OFF	OFF
ALERT	ABNORMAL-OPEN	BRIGHT-FLASHING	ON
AUDIBLE SILENCED	ABNORMAL-OPEN	STEADY-ON	OFF
RETURN TO NORMAL	NORMAL-CLOSED	DIM FLASHING	NO
RESET	NORMAL-CLOSED	OFF	OFF
OPERATIONAL TEST	NORMAL-CLOSED	FLASHING	ON

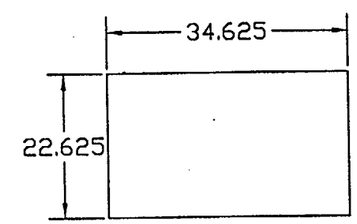

PANEL CUTOUT

NOTE: DO NOT ENGRAVE ANY NOTATION WITHIN PARENTHESIS

NO.	DESCRIPTION	INIT.	DATE
14	REDRAWN IN AUTOCAD	JCA	12/9/00

DATE: 12/8/00
DRAWN BY: JCA
CHECKED BY: ENGINEER:
CODE:
REVISION NUMBER: 14
REVISION DATE: 12/8/00

UNIVERSITY OF MISSOURI-COLUMBIA
FACILITIES OPERATIONS
research reactor facility

10 MW ANNUNCIATOR
OLD GE NO.107 C 4868

MURR NUMBER: 79

SHEET 1 OF 1

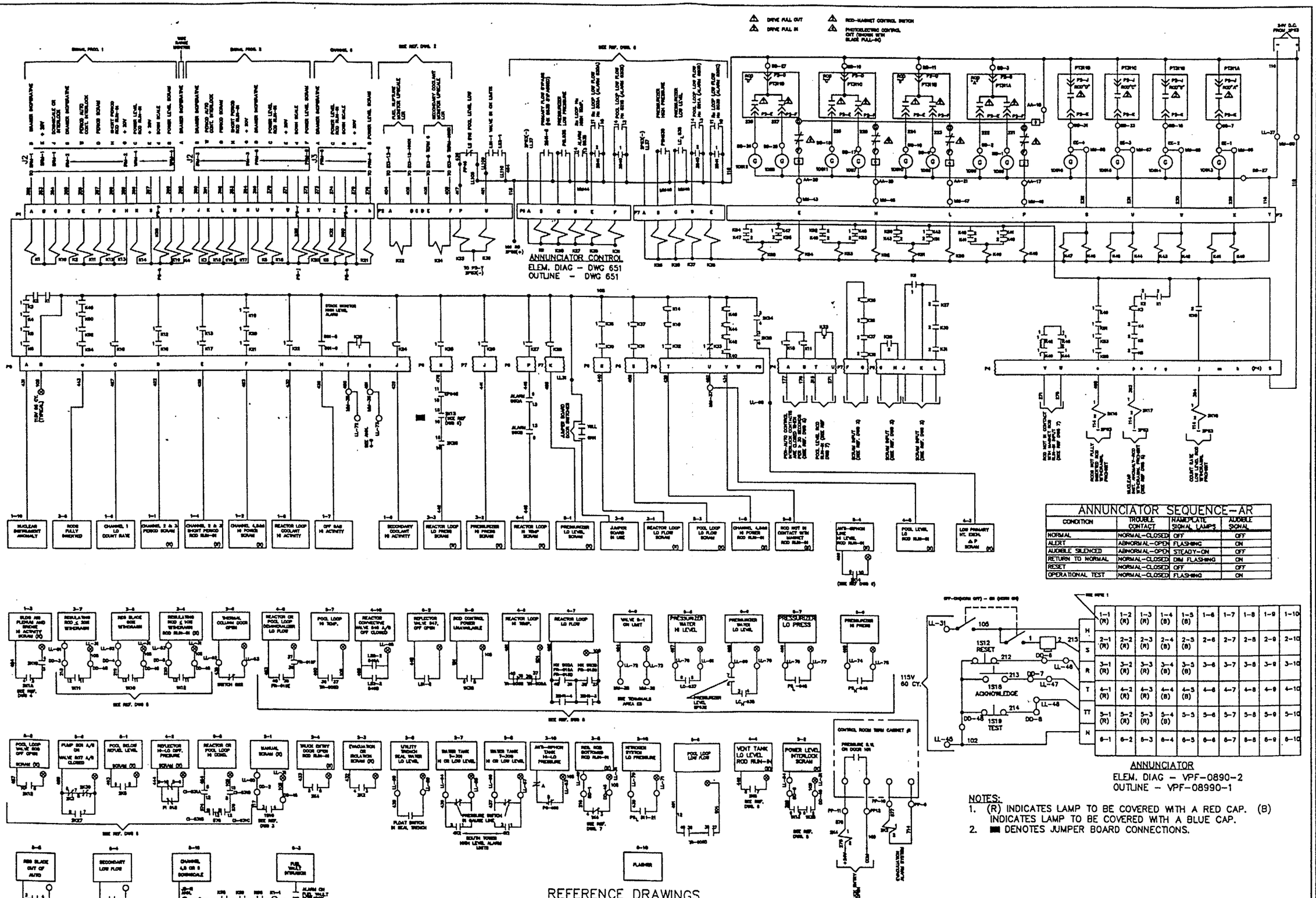

ANNUNCIATOR SEQUENCE–AR

CONDITION	TROUBLE CONTACT	NAMEPLATE SIGNAL LAMPS	AUDIBLE SIGNAL
NORMAL	NORMAL–CLOSED	OFF	OFF
ALERT	ABNORMAL–OPEN	FLASHING	ON
AUDIBLE SILENCED	ABNORMAL–OPEN	STEADY–ON	OFF
RETURN TO NORMAL	NORMAL–CLOSED	DIM FLASHING	ON
RESET	NORMAL–CLOSED	OFF	OFF
OPERATIONAL TEST	NORMAL–CLOSED	FLASHING	ON

NOTES:
1. (R) INDICATES LAMP TO BE COVERED WITH A RED CAP. (B) INDICATES LAMP TO BE COVERED WITH A BLUE CAP.
2. ■ DENOTES JUMPER BOARD CONNECTIONS.

REV.			DATE
31	MOD. PACKAGE 99–1	JCA	9/21/00
30	MOD. PACKAGE 99–1 (DE–MIN FLOW & POOL FLOW)	DGN	11/17/99
29	UPDATED PER CONDITION ASSESMENT	DGN	1/21/99
28	UPDATED AND REVISED ON CAD	JDR	11/19/97

DATE: 5/18/95
DRAWN BY: J RILEY
CHECKED BY: ENGINEER:
CODE:
REVISION NUMBER: 28
REVISION DATE: ~~5/18/95~~ 11/19/97

UNIVERSITY OF MISSOURI–COLUMBIA
FACILITY OPERATIONS
research reactor facility

ANNUNCIATOR CONTROL 10 MW.

MURR NUMBER: 138

SHEET 1 of 2

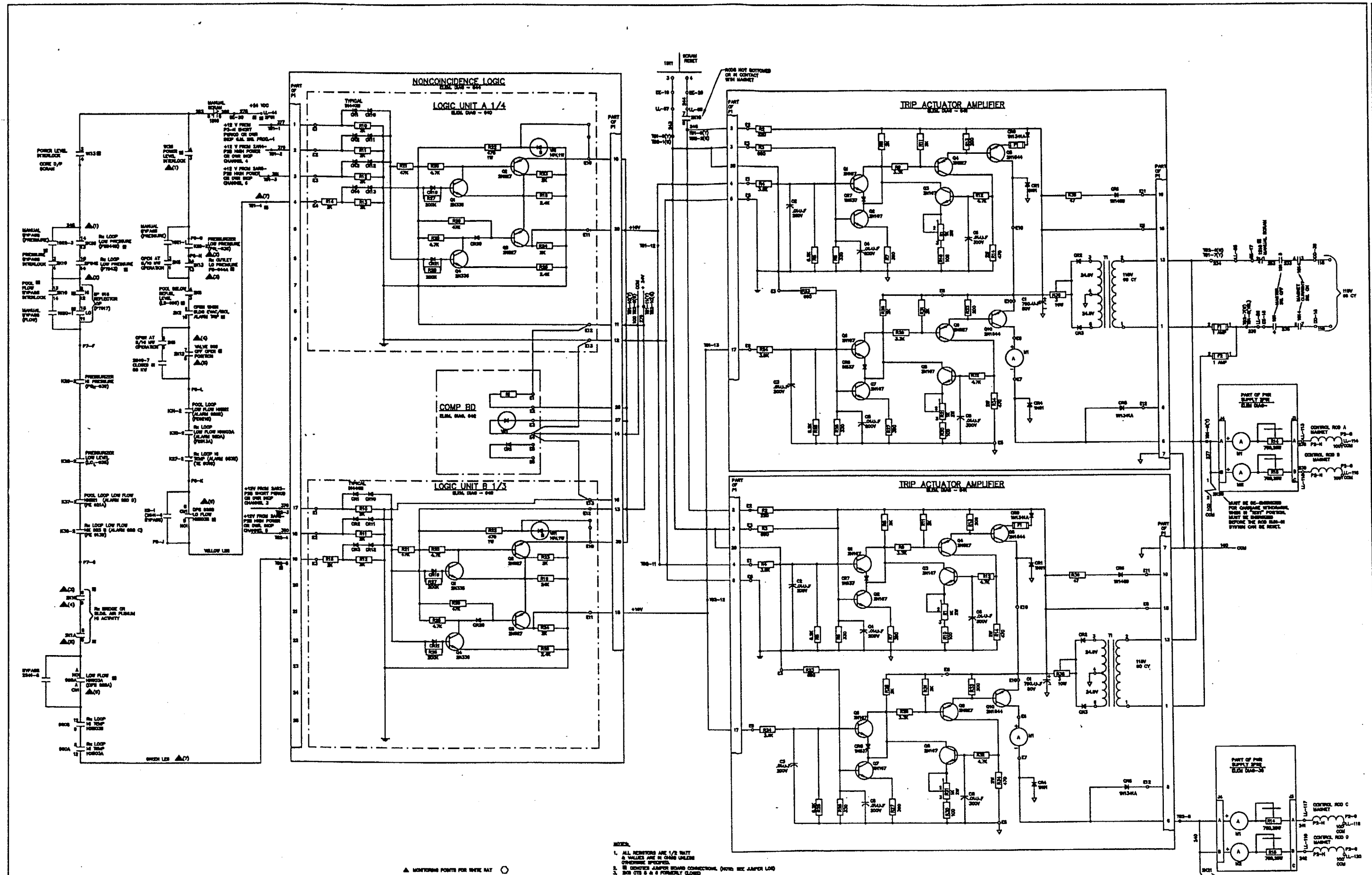

▲ MONITORING POINTS FOR WHITE RAT ○

CONTAC	OFF	BYPASS
1		X
2	X	
3		X
4	X	

CR2040

CKEY LOCK WITH KEY REMOVABLE IN OFF POSITION ONLY)

NOTES:

1. ALL RESISTORS ARE 1/2 WATT & VALUES ARE IN OHMS UNLESS OTHERWISE SPECIFIED.
2. ⊟ DENOTES JUMPER BOARD CONNECTIONS. (NOTE: SEE JUMPER LOG)
3. BCS CTS 5 & 6 FORMERLY CLOSED 19-484 FUEL SAMPLE ON HANGER (99-701). SWITCH REMOVED FROM SYSTEM.

REFERENCE DRAWINGS

1. NEUTRON MONITORING SYSTEM ELEM. DIAG. – DWG. 40
2. REACTOR CONTROL ELEM. DIAG. – DWG. 46
3. ANNUNCIATOR CONTROL ELEM. DIAG. – DWG. 138
4. PROCESS INST. INTERLOCK ELEM. DIAG. – DWG. 41
5. RELAY FUNCTIONS – DWG. 238

REV. NO.	DESCRIPTION	DR. BY	DATE
21	REPLACED 928A, 928B, AS PER MOD 97-1	JCA	12/19/00
20	ADDED JUMPERS TO GRN & YELLOW LEDS AS PER MOD-76-1 ADD1	JCA	11/23/00
19	REDRAWN ON CAD	JDR	3/3/98

DATE: 3/3/98
DRAWN BY: J.RILEY
CHECKED BY: ENGINEER:
CODE:
REVISION NUMBER: 19
REVISION DATE: 3/3/98

UNIVERSITY OF MISSOURI–COLUMBIA
FACILITY OPERATIONS
research reactor facility

SAFETY SYSTEM

MURR NUMBER: 139

SHEET 1 OF 1

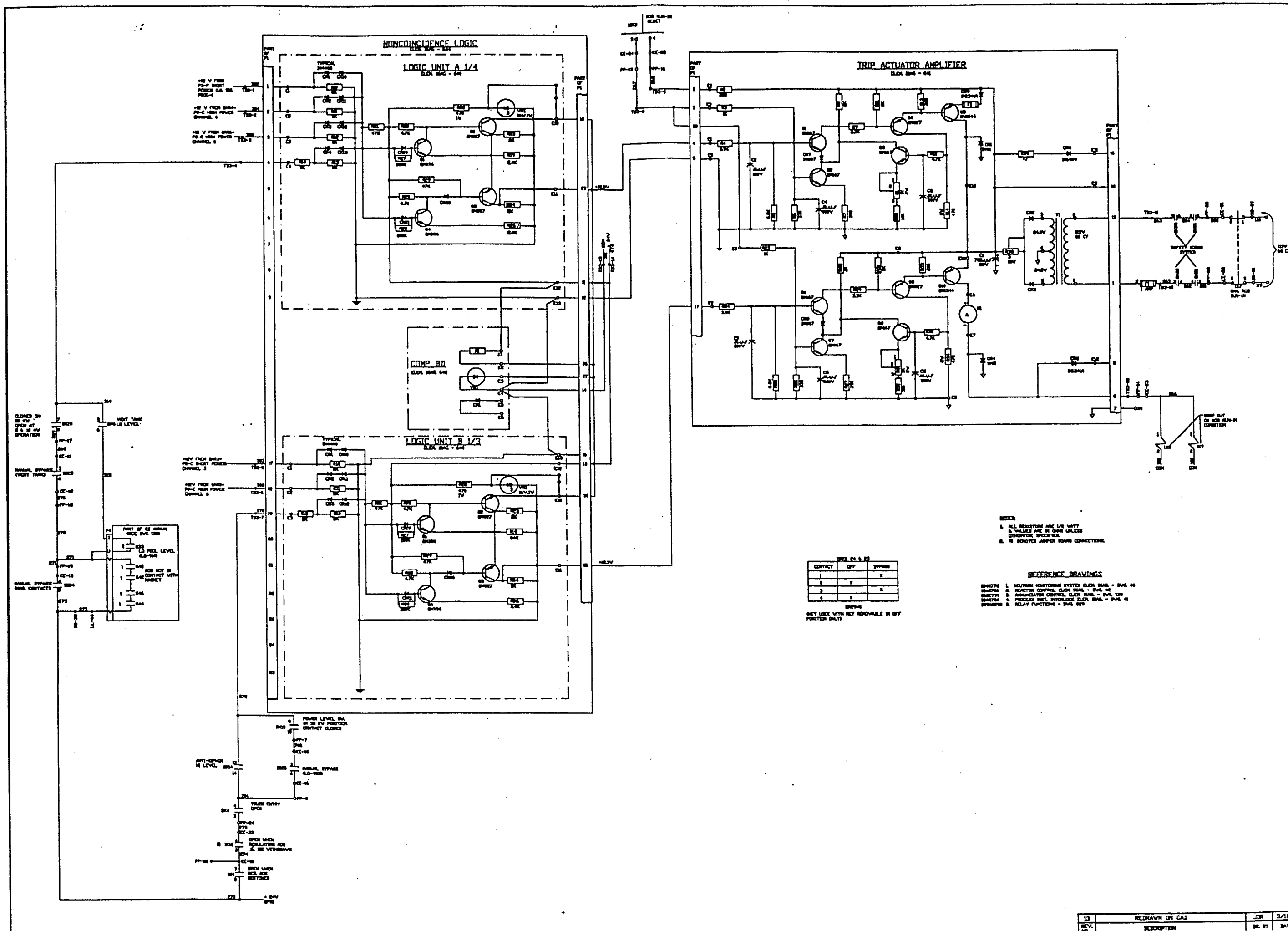
NONCOINCIDENCE LOGIC
LOGIC UNIT A 1/4
COMP BD
LOGIC UNIT B 1/3
TRIP ACTUATOR AMPLIFIER
NOTES:
1. ALL RESISTORS ARE 1/4 WATT.
2. VALUES ARE IN OHMS UNLESS OTHERWISE SPECIFIED.
3. RS SCHOTCH JAMPER SCHAS CONNECTIONS.
REFERENCE DRAWINGS
1. NEUTRON MONITORING SYSTEM CLICK SHAL - SHAL 46
2. REACTOR CONTROL CLICK SHAL - SHAL 48
3. ANNUNCIATOR CONTROL CLICK SHAL - SHAL 139
4. PROCESS INST. INTERLOCK CLICK SHAL - SHAL 41
5. RELAY FUNCTIONS - SHAL 825
CONTACT
OFF
BYPASS
KEY LOCK WITH KEY REMOVABLE IN OFF POSITION ONLY
REV. NO.
DESCRIPTION
BY
DATE
13
REDRAWN ON CAD
JDR
3/16/98
DATE: 3/16/98
DRAWN BY: JRILEY
CHECKED BY: ENGINEER:
CODE:
REVISION NUMBER: 13
REVISION DATE: 3/16/98
UNIVERSITY OF MISSOURI-COLUMBIA
FACILITY OPERATIONS
research reactor facility
ROD RUN-IN SYSTEM
MURR NUMBER: 140
SHEET 1 OF 1

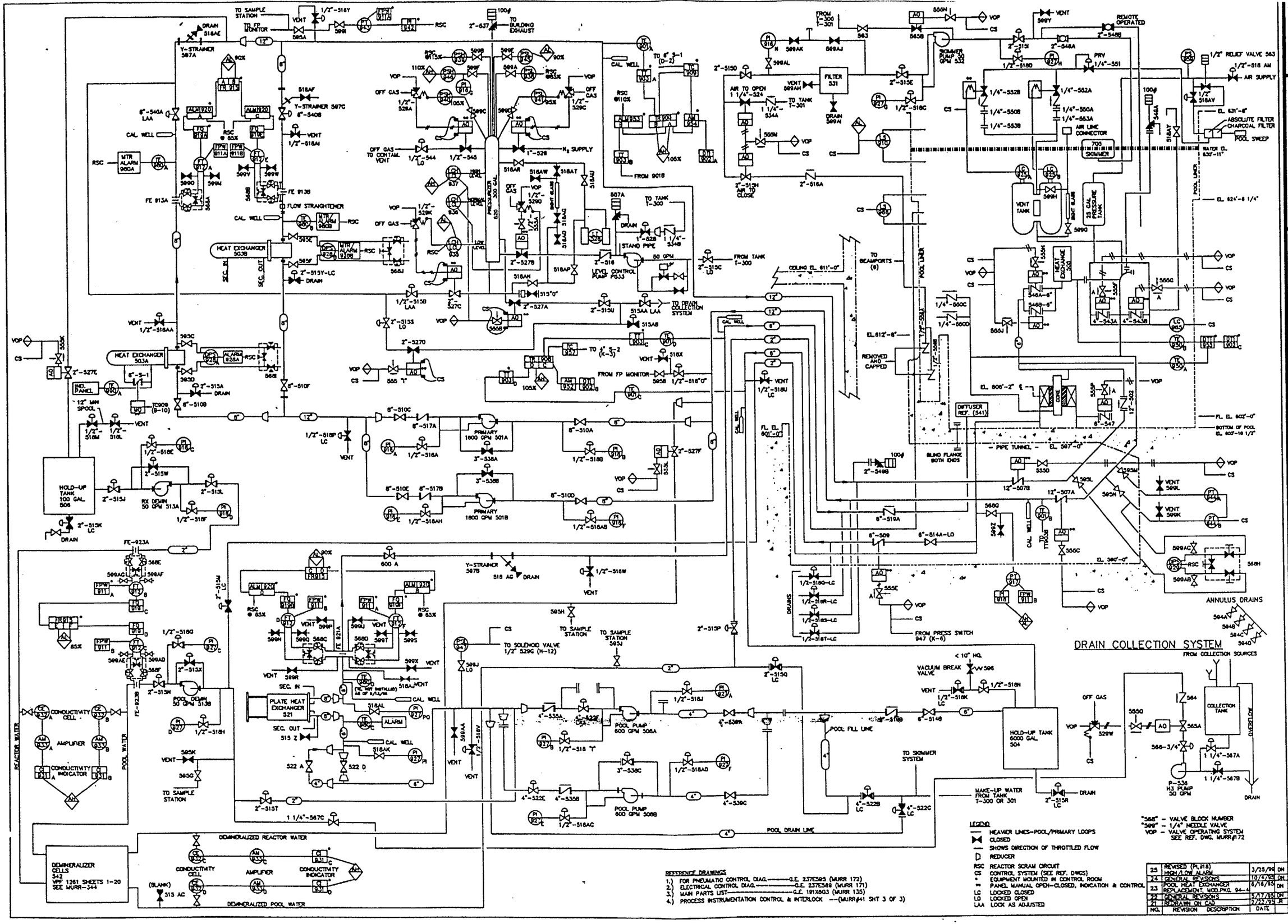
PIPING & INSTRUMENT DIAGRAM
UNIVERSITY OF MISSOURI-COLUMBIA
FACILITIES OPERATIONS
research reactor facility
DATE: 2/22/95
DRAWN BY: JDR / DGN
CHECKED BY: ENGINEER: CDE TONY S.
CODE:
REVISION NUMBER: 23, 24
REVISION DATE: 2/22/95 10/4/95
MURR NUMBER: 156
SHEET 1 of 1
DRAIN COLLECTION SYSTEM
ANNULUS DRAINS
HOLD-UP TANK 100 GAL 506
HOLD-UP TANK 6000 GAL 504
PLATE HEAT EXCHANGER 521
DEMINERALIZER CELLS 542
COLLECTION TANK
POOL PUMP 600 GPM 506A
POOL PUMP 600 GPM 506B
POOL FILL LINE
POOL DRAIN LINE
DEMINERALIZED REACTOR WATER
DEMINERALIZED POOL WATER
REACTOR WATER
POOL WATER
LEGEND
HEAVIER LINES-POOL/PRIMARY LOOPS
CLOSED
SHOWS DIRECTION OF THROTTLED FLOW
REDUCER
RSC REACTOR SCRAM CIRCUIT
CS CONTROL SYSTEM (SEE REF. DWGS)
* EQUIPMENT MOUNTED IN CONTROL ROOM
** PANEL MANUAL OPEN-CLOSED, INDICATION & CONTROL
LC LOCKED CLOSED
LO LOCKED OPEN
LAA LOCK AS ADJUSTED
"568" - VALVE BLOCK NUMBER
"599" - 1/4" NEEDLE VALVE
VOP - VALVE OPERATING SYSTEM SEE REF. DWG. MURR#172
REFERENCE DRAWINGS
1.) FOR PNEUMATIC CONTROL DIAG. — G.E. 237E595 (MURR 172)
2.) ELECTRICAL CONTROL DIAG. — G.E. 237E589 (MURR 171)
3.) MAIN PARTS LIST — G.E. 191X803 (MURR 135)
4.) PROCESS INSTRUMENTATION CONTROL & INTERLOCK — (MURR#41 SHT 3 OF 3)
25 REVISED (PL318) HIGH/LOW ALARM 3/25/94 DN
24 GENERAL REVISIONS 10/4/95 DN
23 POOL HEAT EXCHANGER REPLACEMENT, MOD.PKG. 94-4 6/16/93 DN
22 GENERAL REVISIONS 3/17/93 DN
21 REDRAWN ON CAD 2/22/95 JR
NO. REVISION DESCRIPTION DATE

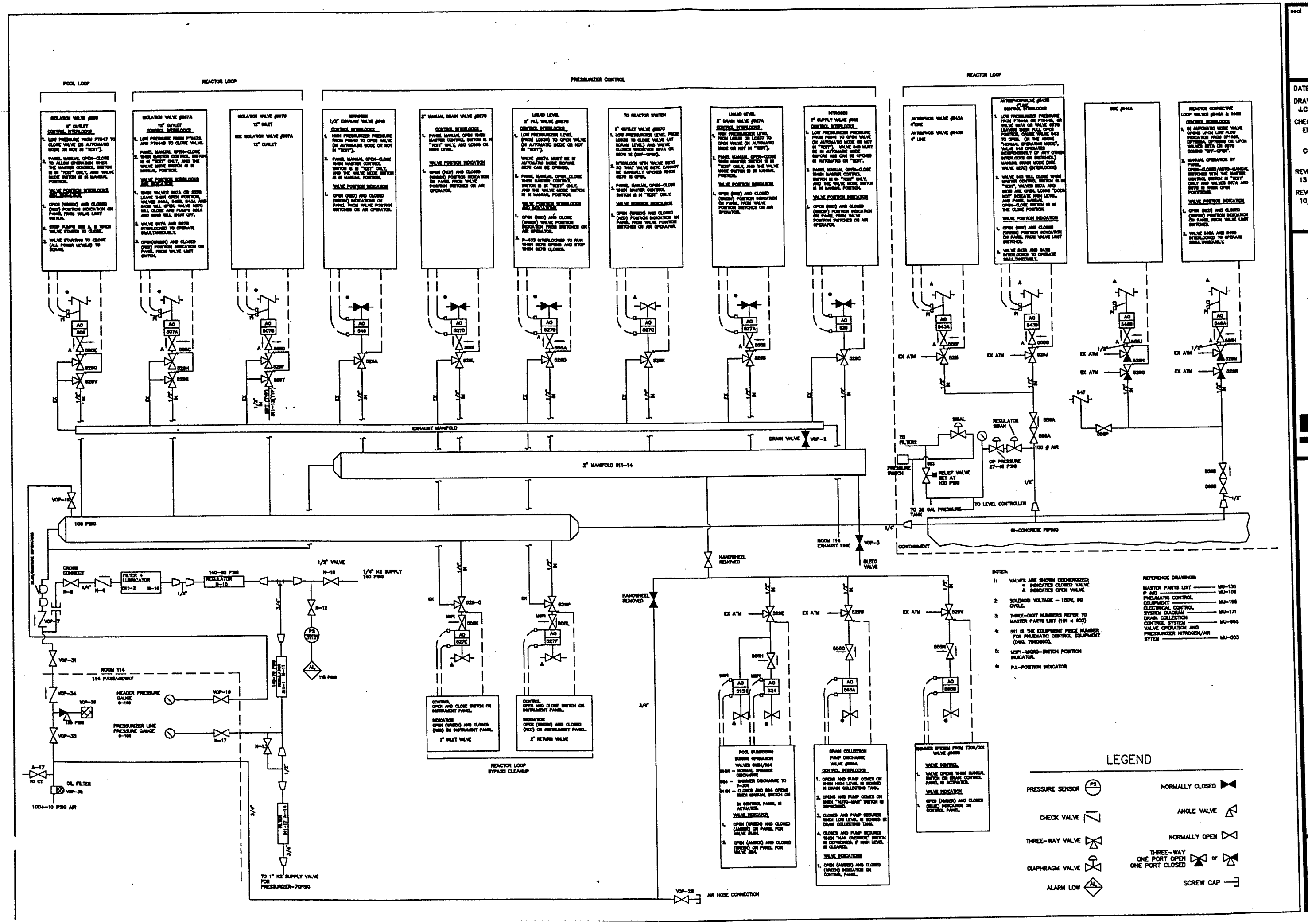

seal

DATE: 10/26/00

DRAWN BY: J.C.A

CHECKED BY: ENGINEER:

CODE:

REVISION NUMBER: 13

REVISION DATE: 10/26/00

UNIVERSITY OF MISSOURI–COLUMBIA
FACILITIES OPERATIONS
research reactor facility

PNEUMATIC CONTROL SYSTEM

MURR NUMBER: 172

SHEET 1 OF 1

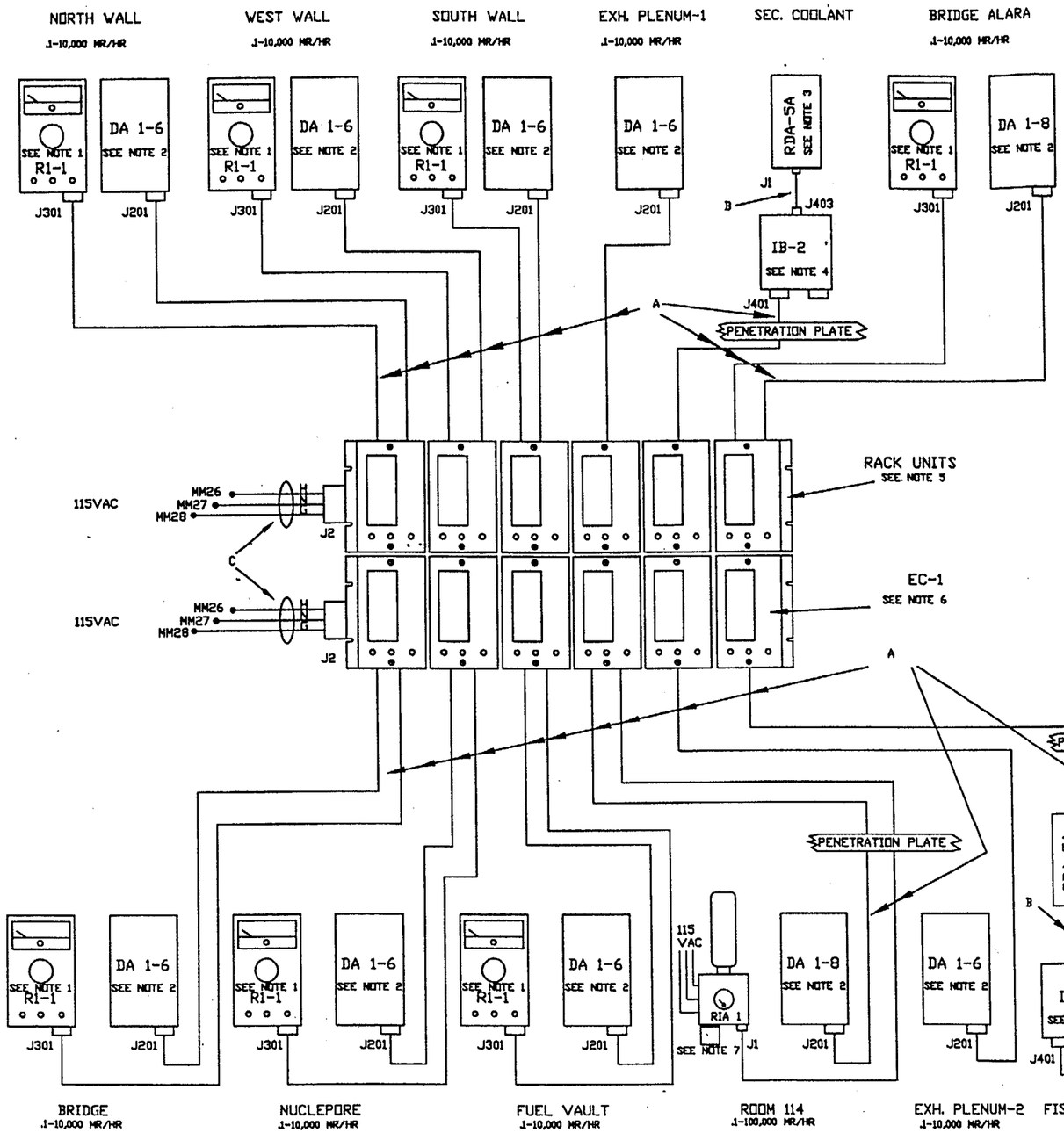

WIRE AND CONNECTOR LEGEND	
DESIGNATION	DESCRIPTION
A	BELDEN TYPE 8777, 3 SHIELDED PAIR #22
B	R/G59A/U, COAXIAL CABLE
C	BELDEN NO. 17952
J1(RDA)	MHV, APHENOL TYPE 27025.
J1(RIA)	9-PIN AMPHENOL NO. 165-15.
J2	115 VAC, AMP NO. 61060-1.
J201	12-PIN, AMPHENOL NO. 165-11.
J301	9-PIN, AMPHENOL NO. 165-15.
J401	12-PIN, AMPHENOL NO. 165-11.
J403	MHV, AMPHENOL T HYPE 27025.

NOTE:

1. REMOTE INDICATOR ELEMENTARY DRAWING INCLUDED IN INSTRUCTION MANUAL (MURR 1898).
2. GM DETECTOR ASSEMBLY ELEMENTARY DRAWING INCLUDED IN INSTRUCTION MANUAL (MURR 1898).
3. SCINTILLATION DETECTOR ASSEMBLY ELEMENTARY DRAWING INCLUDED IN INSTRUCTION MANUAL (MURR 1898).
4. INTERFACE BOX ELEMENTARY DRAWING INCLUDED IN INSTRUCTION MANUAL (MURR 1898).
5. RACK UNIT ELEMENTARY DRAWING INCLUDED IN INSTRUCTION MANUAL (MURR 1898).
6. ELECTRONIC CHANNEL ELEMENTARY DRAWING INCLUDED IN INSTRUCTION MANUAL (MURR 1898).
7. REMOTE INDICATOR/ANNUNCIATOR ELEMENTARY DRAWING INCLUDED IN INSTRUCTION MANUAL (MURR 1898).
8. MICROSWITCH CONTACTS OPEN WHEN DOOR IS TAMPERED WITH.

DRAWING REFERENCES:

1. ANNUNCIATOR CONTROL - MURR 138.
2. SAFETY SYSTEM (10MW) - MURR 139.
3. EVACUATION/ISOLATION SYSTEM - MURR 524.

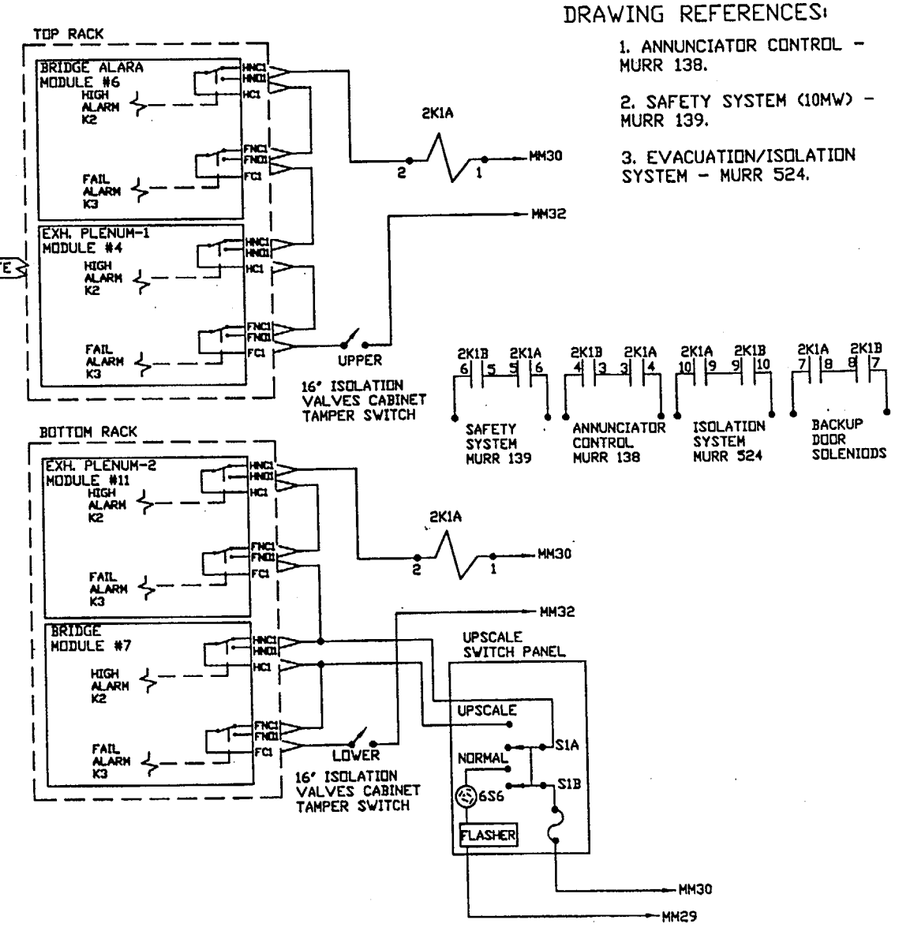

DATE: 11/30/00
DRAWN BY: JCA
CHECKED BY: ENGINEER:
CODE:
REVISION NUMBER: 12
REVISION DATE: 11/30/00

UNIVERSITY OF MISSOURI-COLUMBIA
FACILITIES OPERATIONS
research reactor facility

AREA MONITORING SYSTEM

MURR NUMBER: 203

SHEET 1 OF 1

LEGEND

- GATE VALVE
- VALVE (DIAPHRAGM TYPE)
- REMOTE OP. VALVE
- BULLSEYE

REFERENCE DRAWINGS

DWG #328 MAKE UP DEMILNERALIZER
DWG #331 PIPING PLAN
DWG #334 PIPING ELEVATIONS
DWG #343 DRAWING INDEX
DWG #344 OLD CHEM-PUBE
DWG #336 FILTER F-200 SERIES
DWG #970 ACID STORAGE SYSTEM

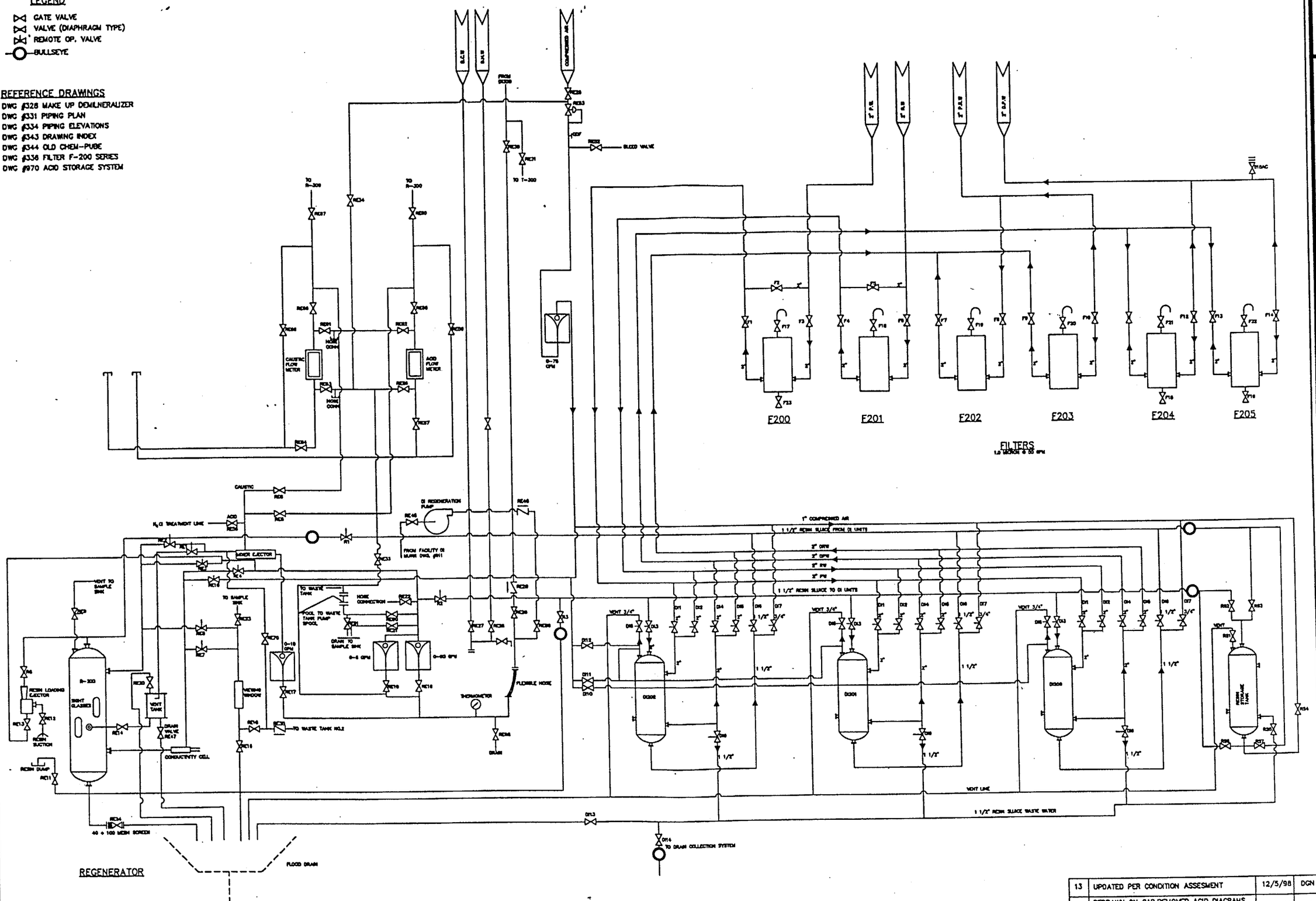

NO.	REVISION	DATE	BY
13	UPDATED PER CONDITION ASSESMENT	12/5/98	DGN
12	REDRAWN ON CAD,REMOVED ACID DIAGRAMS AND REDRAWN ON MURR DWG #970	8/14/96	JDR

DATE: 7/9/96
DRAWN BY: JDR
CHECKED BY: ENGINEER:
CODE:
REVISION NUMBER: 13
REVISION DATE: 12/5/98

UNIVERSITY OF MISSOURI—COLUMBIA
FACILITY OPERATIONS
research reactor facility

DEMENERALIZER – REGENERATOR PIPING DIAGRAM DI – 200 SERIES

MURR NUMBER: 344

SHEET 1 of 1

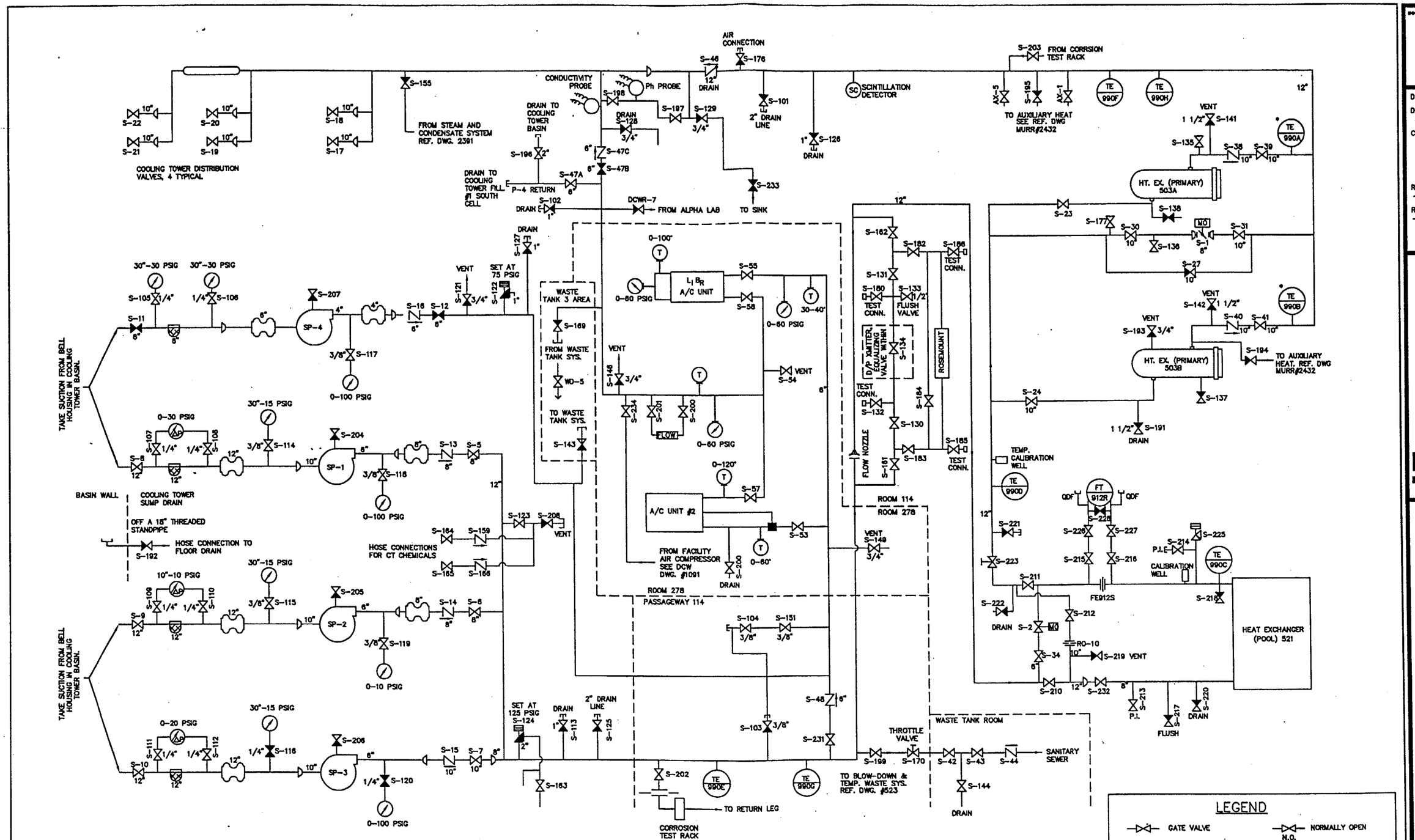

REV. NO.	DESCRIPTION	DR. BY	DATE
23	UPDATED PER CONDITION ASSESSMENT	DGN	1/28/99
23	UPDATED PER CONDITION ASSESSMENT	DGN	1/28/99
22	UPDATED PER CONTROL ROOM	JDR	5/5/98
21	CHANGED VALVE S-35 TO VALVE S-2	JDR	8/7/96
20	REMOVED FUTURE STRAINER & S-2 PER CONTROL RM.	JDR	11/2/95
19	UPDATED AND REVISED ON CAD, MOD. PACKAGE 94-5	JDR	8/10/95

ABBREVIATION REFERENCE
FCV = FLOW CONTROL VALVE
QDF = QUICK DISCONNECT FITTING
DCWR = DOMESTIC COLD WATER RETURN
S = SECONDARY SYSTEM
FT = FLOW TRANSMITTER
TE = TEMP. ELEMENT
AX = AUXILIARY HEATING AND COOLING SYSTEM
* TE REMOVED FROM WELLS

seal

DATE: ~~1/28/95~~ 11/2/95
DRAWN BY: JOEY RILEY
CHECKED BY: ENGINEER:
CODE:
REVISION NUMBER: ~~19~~ 22
REVISION DATE: ~~4/26/95~~ 5/5/98

UNIVERSITY OF MISSOURI-COLUMBIA
FACILITIES OPERATION
research reactor facility

SECONDARY COOLING SYSTEM

MURR NUMBER: 502

SHEET 1 of 1

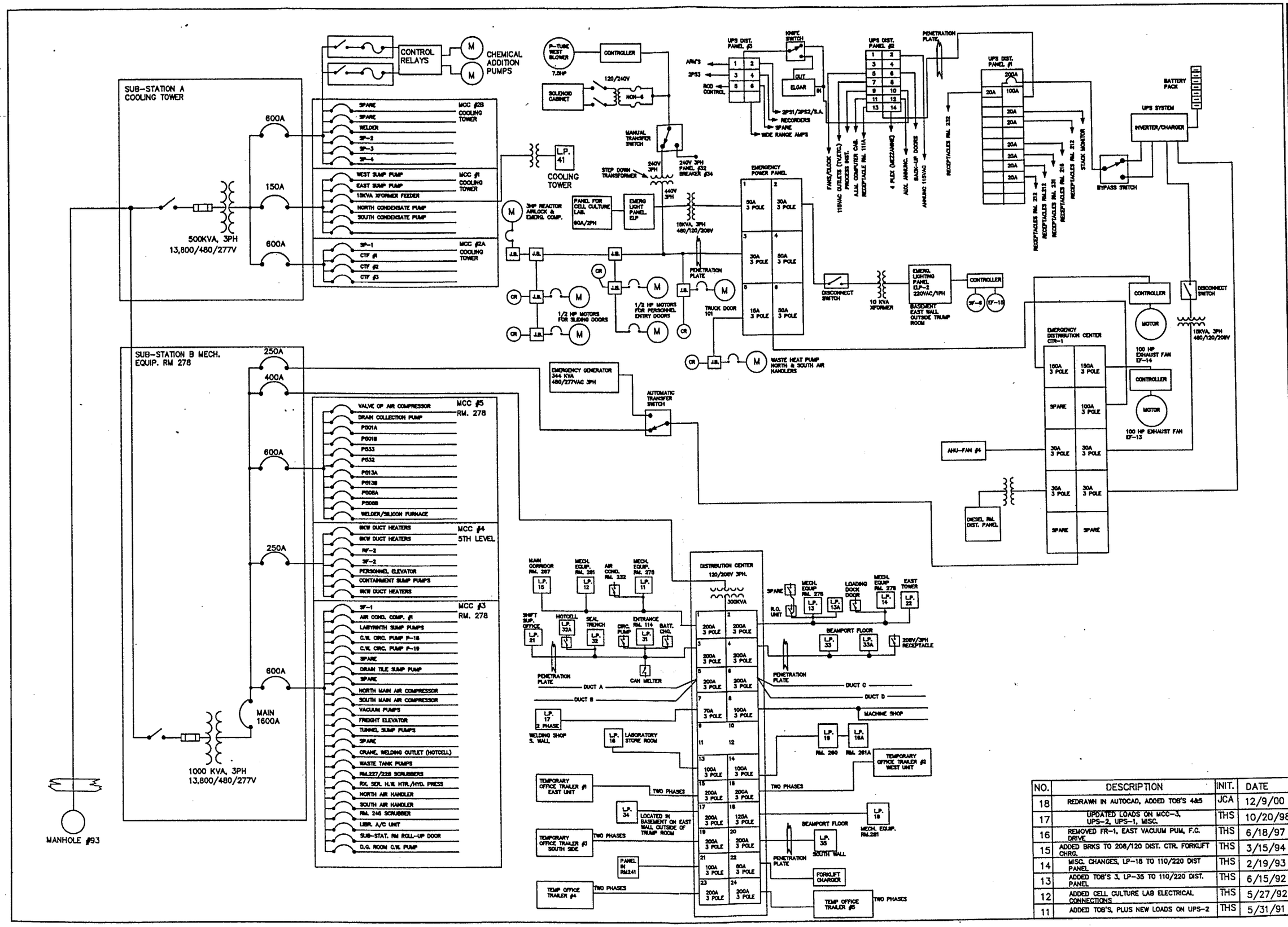

NO.	DESCRIPTION	INIT.	DATE
18	REDRAWN IN AUTOCAD, ADDED TOB'S 4&5	JCA	12/9/00
17	UPDATED LOADS ON MCC-3, UPS-2, UPS-1, MISC.	THS	10/20/98
16	REMOVED FR-1, EAST VACUUM PUM, F.C. DRIVE	THS	6/18/97
15	ADDED BRKS TO 208/120 DIST. CTR. FORKLIFT CHRG.	THS	3/15/94
14	MISC. CHANGES, LP-18 TO 110/220 DIST PANEL	THS	2/19/93
13	ADDED TOB'S 3, LP-35 TO 110/220 DIST. PANEL	THS	6/15/92
12	ADDED CELL CULTURE LAB ELECTRICAL CONNECTIONS	THS	5/27/92
11	ADDED TOB'S, PLUS NEW LOADS ON UPS-2	THS	5/31/91

seal

DATE: 12/15/00
DRAWN BY: jca
CHECKED BY:
ENGINEER:
CODE:
REVISION NUMBER: 18
REVISION DATE: 12/15/00

UNIVERSITY OF MISSOURI–COLUMBIA
FACILITIES OPERATIONS
research reactor facility

ELECTRICAL DISTRIBUTION

MURR NUMBER: 522

SHEET 1 of 2

LP-11 MECH. EQUIP. RM. 278

1	N. ANIMAL ROOM LIGHT
2	LTS. LAB 288
3	LAB 227
4	OFFICE 223
5	OFFICE 229
6	LAB 226-229
7	LAB 227, RM 230 & LAB 228 PLUGS
8	N. CORRIDOR LT., N. PARKING LOT LTS.
9	PLUGS IN N. ANIMAL ROOM
10	LAB 224
11	CORRIDOR 230, OUTSIDE PLUG
12	LAB 222
13	MACH. RM 278
14	OFFICE 226, 223, 225, LAB 224 PLUGS
15	MACH. RM 278
16	WASTE HEAT PUMP
17	W. TOWER LTS.
18	WASTE HEAT PUMP
19	N. TOWER LTS. & PLUGS
20	WASTE HEAT PUMP
21	W. TOWER LTS. & PLUGS
22	N. CORRIDOR LTS. & OUTSIDE PLUGS
23	N. TOWER LTS. & PLUGS
24	CONT. CIR., PHOTOCELL & MACH. RM PLUGS
25	N. TOWER LTS. & PLUGS
26	N. PARKING LOT LTS.
27	CLOTHES DRYER
28	OUTLETS IN ANIMAL ROOM (232A)
29	
30	LIGHTS & FAN IN ANIMAL ROOM (232A)
31	SMALL AIR COMPRESSOR (CA)
32	LABYRINTH SUMP LTS. & CONTROL PWR.
33	
34	
35	
36	

LP-12 MECH. EQUIP. RM. 281

1	STORAGE 288 & 289 (STORE RM & HTR. RM)
2	LAB 218
3	MENS RM 292, LOCKER RM 293
4	LAB 216
5	MENS RM FAN, OLD LTS. FOR LAB 213
6	
7	ELECTRONICS SHOP RM 282
8	LAB 213
9	ELECTRONICS SHOP RM 282
10	CORRIDOR 211
11	MECH. RM 281
12	OFFICE 217, 214
13	ELECT. SHOP RM 282 J. BOX/WORKBENCH
14	LAB 212
15	STORAGE 282 AND 289 PLUGS
16	OUTLETS RM 289
17	DR. FOUNTAIN PLUG, CORR. 210N
18	
19	ELECTRONICS SHOP RM 282 PLUG
20	LAB 218 & 216 PLUGS, OFFICE 217 PLUGS
21	ELECT. SHOP RM 282 J. BOX/WORKBENCH
22	PLUGS, LAB 213, 213, 212, & OFFICE 214
23	PLUGS RM 282 WEST WALL
24	PLUGS, ELECT. SHOP RM 282, MECH. RM 281
25	LTS. IN PIPE CHASE
26	EAST TOWER PLUGS
27	AIR HANDLING UNIT RM 212
28	EAST TOWER LOWER FILTER
29	
30	EAST TOWER LTS.
31	RECPT. 214A
32	EAST TOWER TOP FILTER
33	RECPT. 214A & B
34	RECPT. 288
35	
36	RECPT. 288

LP-13 MECH. EQUIP. RM. 278

1	RM 231, 230, & LOADING DOCK
2	LAB 241
3	LAB 247
4	TOILET FANS
5	LAB 245
6	RM 240, W. TOILET, 293, 233, 234, 235
7	OFFICE 243 & 246
8	RM 235
9	LAB 242
10	CORRIDOR 249
11	LAB 244
12	CORRIDOR 248
13	235 & 238 PLUGS
14	VESTIBULE 231
15	235 & 233, VESTIBULE 231 PLUGS
16	OUTLETS RM 238 (SOUTH WALL WEST SIDE)
17	PLUGS, OFFICE 240, CORRIDOR 248-MECH. OUT
18	OFFICE 243 PLUGS
19	OFFICE 246 PLUGS
20	CORRIDOR 249 PLUGS & OUT. SVITCH
21	RM 230 PLUGS & OUT PLUG AT DOCK
22	MECH. RM 278 LTS./
	LIGHT ABOVE LIBR AC UNIT
23	MECH. RM 278 PLUGS
24	PSGY 276 LTS.
25	OUTLETS RM 238 (SOUTHWEST WORKBENCH)
26	MECH. RM 278 FAN
27	OUTLETS RM 238 (ON PLATFORM)
28	
29	FAN OUTLETS RM 244B
30	
31	OUTLETS RM 238 (EAST WALL)
32	
33	OUTLETS RM 238 (SOUTH WALL EAST SIDE)
34	
35	DRYER FAN
36	OUTLETS RM 238 (NORTH WALL)

LP-13A MECH. EQUIP. RM. 278

1	AIR HANDLER ROOM 238
2	FUME HOOD ROOM 244
3	SAME AS 1
4	SAME AS 2
5	SAME AS 1
6	SAME AS 2
7	
8	
9	
10	

LP-14 MECH. EQUIP. RM. 273

1	OFFICES 256-258, CORRIDOR 254
2	LAB 257
3	LAB 258
4	LAB 259
5	LTS. IN FRONT OF PANEL
6	LAB 260
7	RECPTS. MACHINE SHOP WEST WALL
8	EMERGENCY LT. RECPT. BY PANEL
9	MACHINE SHOP 271
10	RM 272 & PIPE SPACE
11	SAME AS 9
12	LADIES RM. 266, FANS/LTS. IN KITCHEN 264
13	CORRIDOR 267
14	DARK ROOM 267 & TOPAZ LTS.
15	FAN, MACHINE SHOP 271
16	RM 269-270
17	WATER COOLER
18	FAN, LADIES RM. 266
19	REFRIG., RM. 264 RECPT., RM. 231 RECPT.
20	RECPTS. MECH. EQUIP. RM. 273
21	RECPTS. 270, 267, 269
22	RECPTS. MECH. EQUIP. RM. SOUTH WALL
23	RECPTS. OFFICE 256-258
24	RECPTS. DARK RM. 267-272
25	RECPTS. OFFICE 258, LAB 259, CORRIDOR 254
26	RECPTS. DARK RM 269, 267, 263, 210
27	BUZZER, LOAD DOCK & HI LEVEL SUMP ALARM
28	SOUTH TOWER LTS., LTS. IN FAN ROOM
29	HEATER, SOUTH TOWER
30	SOUTH TOWER RECPTS. & AMPLIFIERS 300-301
31	SAME AS 29
32	SOUTH TOWER UNIT HEATER
33	ELECTRIC RANGE ROOM 264
34	
35	
36	RECPT. IN FAN ROOM

LP-15 MECH. EQUIP. RM. 287

1	261 RECPT
2	LOUNGE 263 IN LOBBY
3	261C RECPT
4	LOBBY 202 (MAIN), RM 203 (PHOTOCOPY)
5	RM 262 RECPT.
6	LOBBY 202 (MAIN)
7	FAN, LUNCH RM 269
8	CANOPY LTS. (OUTSIDE)
9	OFFICE 205, 206, 208
10	CANOPY LTS. (OUTSIDE)
11	CONFERENCE RM 209
12	LOBBY 202
13	CONFERENCE RM 209
14	CORRIDOR 210 N.
15	FAN, CONFERENCE RM 209
16	CORRIDOR 210 S.
17	PLUG UNDER PANEL
18	LOUNGE 263, RM 262 PLUG
19	CORRIDOR 210 PLUGS
20	RM 262 & OFFICE 261 PLUGS
21	
22	
23	
24	PLUGS, VESTIBULE 201 & OUTSIDE PLUG
25	
26	LOBBY CLOSET
27	RECPT. UNIT 6
28	LOBBY CLOSET
29	RECPT.
30	RECEPTION LOBBY CLOSET RM 203
31	MICROWAVE OVEN
32	RECPT. FOR SODA MACHINE, SMOKE EATER
33	RECPT. LUNCH RM
34	RECPT. LUNCH RM
35	RECPT. FOR COFFEE MACHINE
36	OUTLET ON N. WALL RM 204 COMPUTER

LP-16 RM. 231C

1A	RECPTS. IN TOPAZ WASHER ROOM (EAST WALL)
1B	LTS. NORTH
2A	RECPTS. IN TOPAZ WASHER ROOM (WEST WALL)
2B	SPARE
3A	LTS. NORTH
3B	LTS. NORTH
4	RECPT. WEST
5	RECPT. NORTH
6	RECPT. EAST, H & F MONITOR RECPT.
7	LIGHTS SOUTH
8	OVERHEAD DOOR, 3# DRILL PRESS RECPT.
9	LIGHTS SOUTH (EXIT LTS.)
10	SAME AS 8
11	LIGHTS SOUTH
12	SAME 8
13	MOTOR (AIR)
14A	EAST WALL RECPTS. NORTH PAIR
14B	SAME AS 13
15	SAME AS 13
16A	EAST WALL RECPTS. SOUTHEAST
16B	
17	SAME AS 13
18A	
18B	
19	
20A	
20B	

LP-17 WELDING SHOP

1	RECPTS. SOUTHEAST WALL
2	
3	RECPTS. EAST WALL
4	
5	220V RECPT. EAST WALL
6	
7	SAME AS 5
8	
9	
10	

LP-18 MECH. EQUIP. RM. 281

1	
2	MAIN (100A)
3	
4	SAME AS 2
5	
6	SAME AS 2
7	RECEPT. (5TH REFRIGERATOR)
8	RECEPT. (1ST & 3RD REFRIGERATOR)
9	SAME AS 7
10	RECEPT. (2ND REFRIGERATOR)
11	D. I. PUMP (N. TOWER)
12	RECEPT. (4TH REFRIGERATOR)
13	SPARE
14	UPS ROOM EXHAUST FAN
15	SPARE
16	
17	
18	

LP-19 RM. 260

1	RECPT. #1 WEST WALL
2	RECPT. #2 WEST WALL
3	RECPT. #3 WEST WALL
4	RECPT. #4 WEST WALL
5	RECPT. #5 WEST WALL
6	RECPT. #6 WEST WALL
7	RECPT. #7 WEST WALL
8	RECPT. #8 WEST WALL
9	
10	

LP-21 CONTROL ROOM

1	N. HIGH LTS. V. ROW
2	LTS. 304
3	S. HIGH LTS. V. ROW
4	LTS. 304
5	S. HIGH LTS. E. ROW
6	LTS. 402
7	CTR. HIGH LTS. CTR. ROW
8	LTS. 404, 405
9	N. HIGH LTS. E. ROW
10	RM 285, WATER COOLER PLUG
11	LTS. 304, ADT SECURITY SYSTEM
12	PLUGS 295, 296
13	LTS. 304
14	ELEVATOR LTS.
15	LOBBY 285 LTS. INSIDE AIRLOCK
16	OUTLETS RM 302
17	LAB 275 LTS., AIRLOCK
18	OUTLETS BEHIND INSTRU. CABINET ON FLOOR
19	302 & 304 PLUGS
20	404 & 405 PLUGS
21	PLUGS ON REACTOR SI ROTATOR
22	402 & 304 PLUGS
23	
24	LAB COUNTERS 273
25	SM. PLUG BEHIND CONT. BD., C.T. DOOR ALARM
26	LAB COUNTER 273
27	RECPT. CLOSE TO FLOOR BEHIND CONT. BD.
	& DCV ALARM
28	ROD DROP TIMER/DCV & ALARM CKTS.
	FIRE MAIN, ETC.
29	PLUGS ON RX. BRIDGE
30	HOIST, MONORAIL
31	COFFEE MESS
32	HOIST, MONORAIL
33	A.C. 5TH LEVEL
34	HOT WATER HEATER
35	A.C. 5TH LEVEL
36	SILICON COMPUTER CAB. (EAST)

LP-22 EAST TOWER

1	EAST PARKING LOT LT. CONTROL
2	ROOF MU LTS.
3	EAST PARKING LOT CONTROL
4	ROOF MU LTS.
5	
6	ROOF MU LTS.
7	
8	
9	
10	

LP-31 ENTRANCE RM. 114

1	CHEM-PURE RMS.
2	J. BOX UNDER SVITCH IN 113
3	WASTE STORAGE & FILTER RMS.
4	HT. EXCHANGER RM 114 LTS.
5	PASSAGE LTS. WEST
6	HT. EXCHANGER RM 114 LTS
7	PASSAGE LTS. WEST
8	BATTERY CHARGER OUTLET (220V)
9	WORK AREA 113 LTS.
10	BATTERY CHARGER OUTLET (220V)
11	PASSAGE 103 LTS.
12	LTS. IN TRENCH UNDER RX.
13	MECH. RM 119, 116, 112 LTS.
14	HEAT EXCHANGER RM 114 PLUGS
15	WORK AREA 113 S. WALL PLUGS
16	PLUGS, WASTE STORAGE & CHEM-PURE RMS
17	PLUGS, MECH. RM 119 & N2 STATION
	& DOOR ALARM
18	PASSAGE 112 PLUGS
19	PLUGS, WORK AREA 113 & PASSAGE 103
20	FAN, EXHAUST FAN 13, TUNNEL
21	WASTE TANK AMPLIFIERS & RM 114 DOOR
	WARNING LT. & BELL
22	HOTCELL LTS. (MEDIPHYSICS)
23	WASTE TANK OUTLETS
24	MEDIPHYSICS HOTCELL
25	LGT. & OUTLETS IN VT. & DI REGEN. RM.
26	MEDIPHYSICS HOTCELL
27	SAMPLE ST. FAN/FPM & SEC. COOLANT SUPPLY
28	MEDIPHYSICS HOTCELL
29	COMPACTOR
30	MEDIPHYSICS HOTCELL
31	COMPACTOR
32	MEDIPHYSICS HOTCELL
33	COMPACTOR
34	MEDIPHYSICS HOTCELL
35	WASTE TANK RM. OUTLETS
36	MEDIPHYSICS HOTCELL

LP-32 SEAL TRENCH

1	AREA LTS.
2	AREA LTS. 110
3	AREA LTS.
4	AREA LTS. 110
5	OPERATIONS 106 LTS.
6	AREA LTS. 110
7	OPERATIONS 106 LTS./CO60 FAN LTS.
8	HOT CELL HOIST
9	STORAGE LTS. NO. 111
10	HOT CELL HOIST
11	SUMP PUMP ELEVATOR
12	SAME AS 8
13	CO60 PUMP & LTS.
14	SOUTH WALL PLUGS
15	AREA 110 PLUGS
16	CO60 ELEVATOR CONTROL
17	PLUGMOLD EAST WALL
18	ELEVATOR OUTLET
19	SAME AS 15
20	PLUG TOP OF HOT CELL WEST SIDE
21	
22	HOT CELL LTS.
23	
24	TOP OF HOT CELL S. SIDE (FUTURE PLUG)
25	PLUG IN HOT CELL NO. TWO
26	EMERG. LT. & HOIST ABOVE HOT CELL
27	PLUG IN HOT CELL 3 & 4
28	
29	PLUG IN HOT CELL NO. 5 & 6
30	
31	
32	SEAL TRENCH PUMP
33	CO60 ROOM, V. WALL PLUG MOLD
34	
35	PNEUMATIC BLOWER MOTOR, SHP. SOA
36	

LP-32A HOT CELL

1	AC RECPT. OVER CART CONTROL PANEL
2	MATERIAL TES., V. WALL OF HOT CELL
3	GLOVE BOX POWER PANEL, S. WALL
4	SAME AS 2
5	HOT CELL DOOR
6	SAME AS 2
7	SAME AS 5
8	TRANSFER CART POWER
9	SAME AS 5
10	CLUTCH POWER
11	SAME AS 3
12	OUTLETS S.V. WALL
13	SAME AS 3
14	HOT CELL CAN OPENER
15	2# PLUG SOUTH WALL
16	TRASH DOOR (WORK CART)
17	2# PLUG EAST OF CO60
18	WORK CART POWER & HYD. TABLE
19	
20	OUTLETS WEST WALL
21	
22	
23	
24	

LP-33 BEAMPORT FLOOR (E)

1	LTS. UNDER BALCONY
2	
3	SAME AS 1
4	
5	SAME AS 1
6	
7	LTS. NORTH
8	
9	LTS. NORTH
10	CHERG. LT. SV CORNER OF SOUTH WALL
11	LTS. NORTH
12	LTS. ON SOUTH WALL
13	NORTH LT.
14	LTS. ON REACTOR
15	LTS. NORTH
16	OUTLET ON EAST WALL
17	OUTLET NORTH OF BIOSHIELD
18	SPARE
19	PLUGS AROUND EAST & SOUTH WALLS
20	PLUGS AROUND NORTH WALL
21	PLUGS AROUND WEST WALL
22	PLUGS AROUND NORTH WALL
23	OUTLETS V. DIVIDER COMP. RM.
24	
25	125V, 30A, SOUTH CORNER, EAST WALL
26	SPARE
27	
28	OUTLETS EAST WALL AT PANEL SOUTH
29	(5) COMPUTER TERMINAL
30	OUTLET EAST WALL AT PANEL
31	
32	OUTLET 30A EAST WALL
33	WELDER OUTLET
34	
35	WELDER OUTLET
36	
37	WELDER OUTLET

LP-33A BEAMPORT FLOOR (NE)

1	SPARE
2	220V RECPT. NORTH/EAST CORNER
3	LP-33B
4	SAME AS 2
5	SAME AS 3
6	SPARE
7	SAME AS 3
8	RECPT. EAST WALL (EXTENSION BOOD
9	SANS VACUUM PUMP CART NE COLUMN
10	RECPTS. SOUTHEAST COLUMN (EAST SIDE)
11	SAME AS 9
12	RECPT. SOUTHEAST COLUMN (WEST SIDE)
13	SAME AS 9
14	POWER STRIP, MACHINE SHOP SOUTH
15	RECPT. SOUTHWEST COLUMN (EAST SIDE)
16	POWER STRIP, MACHINE SHOP NORTH
17	TWIST LOCK SOUTH/WEST COLUMN WEST SIDE
18	MACH. SHOP 3# RECPT.

LP-33B BEAMPORT FLOOR (NW)

1	QUEGS 4 PLEX NORTH
2	20A 3 PHASE RECEPTACLE BELOW PANEL
3	QUEGS 4 PLEX SOUTH
4	SAME AS 2
5	220V OUTLET UNDER TABLE
6	SAME AS 2
7	SAME AS 3
8	
9	
10	
11	
12	
13	
14	
15	
16	
17	
18	

LP-34 BASEMENT (NORTHEAST)

1	LIGHTS
2	RECEPTACLES
3	200V RECPT. EAST WALL
4	RECEPTACLES
5	SAME AS 3
6	RECEPTACLES
7	50A TWISTLOCK RECEPTACLE NORTHEAST
8	SPARE
9	SAME AS 7
10	RECPT. IN CEILING
11	RECPT. NORTH WALL
12	RECPT. IN CEILING
13	SPARE
14	SPARE
15	SPARE
16	ALARM (WEST WALL)
17	SPARE
18	EAST CHILLER
19	SPARE
20	220V RECPT. NORTHWEST WALL
21	KNIFE SWITCH ON SOUTHWEST COLUMN
22	SAME AS 20
23	SAME AS 21
24	WEST CHILLER
25	SAME AS 23

LP-35 BEAMPORT FLOOR (SOUTH)

1	REFLECTOMETER RECPTS. BIOLOGICAL SHIELD
2	BEAMPORT C
3	BEAMPORT C
4	BEAMPORT C
5	TRIAX INSTRUMENT CABINET
6	TRIAX INSTRUMENT CABINET
7	TRIAX RECPT. EAST WALL
8	TRIAX AMPLIFIER RACK RECPT.
9	TRIAX AMPLIFIER RACK RECPT.
10	TRIAX AMPLIFIER RACK RECPT.
11	
12	RECEPTACLE NORTH COLUMN NORTH SIDE
13	
14	LP-35A (COSTAR TOWER)
15	
16	LP-35A (COSTAR TOWER)
17	
18	LP-35A (COSTAR TOWER)

LP-35 COSTAR TOWER

1	LIGHTS SOUTH SIDE FLOOR LEVEL
2	RECEPTACLES 3RD LEVEL NORTH
3	RECEPTACLES SOUTH SIDE FLOOR LEVEL
4	LIGHTS 3RD LEVEL NORTH
5	LIGHTS 1ST LEVEL SOUTH
6	LIGHTS 1ST LEVEL NORTH
7	RECEPTACLES 1ST LEVEL SOUTH
8	RECEPTACLES 1ST LEVEL NORTH
9	RECEPTACLES FLOOR LEVEL NORTH
10	LIGHTS FLOOR LEVEL NORTH
11	RECEPTACLES 2ND LEVEL SOUTH
12	RECEPTACLES 2ND LEVEL NORTH
13	LIGHTS 2ND LEVEL SOUTH
14	LIGHTS 2ND LEVEL NORTH
15	
16	
17	
18	

LP-41 COOLING TOWER

1	TVR BASIN LTS. N.
2	ACID ROOM LTS.
3	TUNNEL LTS.
4	ELEC. RM. LTS.
5	TUNNEL LTS.
6	BASEMENT LTS. SOUTH
7	TVR BASIN LTS. SOUTH
8	BASIN LOW LEVEL PUMP CUTOUT
9	PLUGS, GRADE LEVEL
10	HOT WATER RECIRC. PUMP
11	
12	YARD LTS.
13	HEAT TAPE & CHEM. ADDITION CONTROL
14	YEARK LTS.
15	
16	YARD LTS.
17	
18	HEAT TAPES
19	
20	

ELP-1 MECH. EQUIP. RM. 280

1	LTS. SOUTH & HOTCELL VALVE POSITION IND.
2	POWER FOR RM. 215
3	CORRIDOR WEST & NORTH EXIT LTS.
	CORRIDOR EAST & SOUTH EXIT LTS.
4	SAME AS 2
5	LTS. EAST & LOBBY
6	FAN FAILURE ALARM
7	STAIRWAY LTS. CONTAINMENT
8	CORRIDOR WEST AND NORTH LTS.
9	EXIT LTS. CONTAINMENT & DOOR COMBINATION
10	MECHANICAL ROOM WEST
11	INTERCOM
12	EXIT LTS. MECHANICAL ROOM WEST
13	STACK MONITOR
14	RECPT. MOUNTED ON ELP-1
15	EVACUATION & ISOLATION
16	NUCLEPORE
17	
18	EVACUATION & ISOLATION
	16" VALVE COMPRESSOR

ELP-2 BASEMENT, (NE)

1	EMERGENCY LIGHTS IN LAB
2	AIR GLOVEBOX
3	
4	110V RECPT. FOR ALPHA MONITOR
7	SUPPLY FAN SF-6
8	EXHAUST FAN EF-15
9	SAME AS 7
10	SAME AS 8
13	DOOR LOCK & ALARM PANEL
14	DRI-TRAIN
15	FIRE ALARM
16	SAME AS 14
19	SPARE
20	SPARE
21	SPARE
22	SPARE

NO.	DESCRIPTION	INIT.	DATE
7	CONVERTED TO AUTOCAD	JCA	2/9/01
6	UPDATED LP-14, 15, 13	THS	10/1/98
5	CHG. LP-16 TO LP-19	THS	12/1/95

seal

DATE: 2/9/1

DRAWN BY: JCA

CHECKED BY: ENGINEER:

CODE:

REVISION NUMBER: 7

REVISION DATE: 2/9/1

UNIVERSITY OF MISSOURI–COLUMBIA
FACILITIES OPERATIONS
research reactor facility

ELECTRICAL DISTRIBUTION

MURR NUMBER: 522

SHEET 2 OF 2

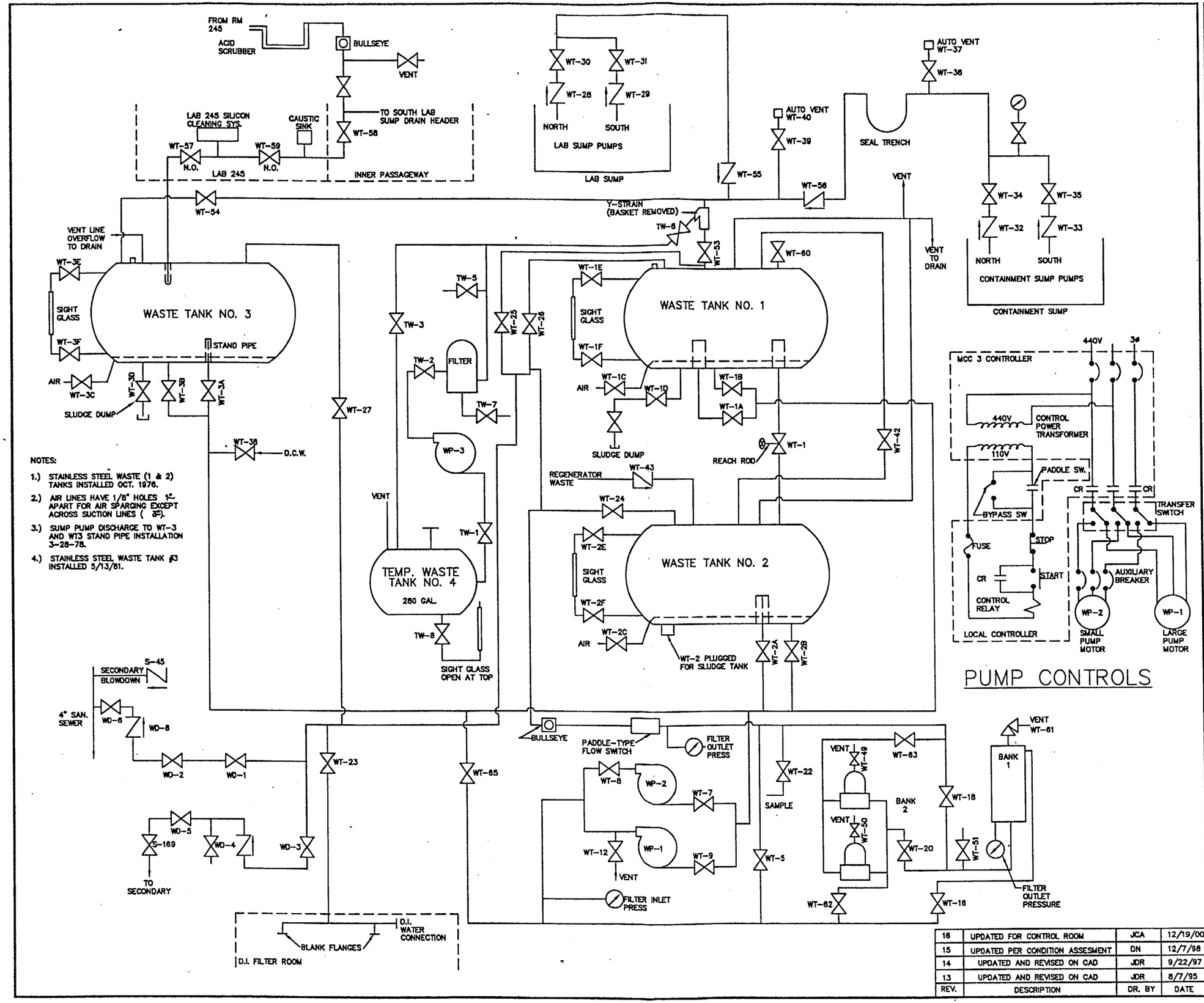

NOTES:

1.) STAINLESS STEEL WASTE (1 & 2) TANKS INSTALLED OCT. 1976.

2.) AIR LINES HAVE 1/8" HOLES 1"- APART FOR AIR SPARGING EXCEPT ACROSS SUCTION LINES (3"-).

3.) SUMP PUMP DISCHARGE TO WT-3 AND WT3 STAND PIPE INSTALLATION 3-28-78.

4.) STAINLESS STEEL WASTE TANK #3 INSTALLED 5/13/81.

REV.	DESCRIPTION	DR. BY	DATE
16	UPDATED FOR CONTROL ROOM	JCA	12/19/00
15	UPDATED PER CONDITION ASSESMENT	DN	12/7/98
14	UPDATED AND REVISED ON CAD	JDR	9/22/97
13	UPDATED AND REVISED ON CAD	JDR	8/7/95

seal

DATE: 8/7/95
DRAWN BY: J. RILEY
CHECKED BY:
ENGINEER:
CODE:
REVISION NUMBER: ~~12~~
REVISION DATE: ~~8/7/95~~

UNIVERSITY OF MISSOURI-COLUMBIA
FACILITY OPERATIONS
research reactor facility

LIQUID RADIOACTIVE WASTE DISPOSAL SYSTEM AND WASTE TANK PUMP CONTROLS

MURR NUMBER: 523

SHEET 1 of 1

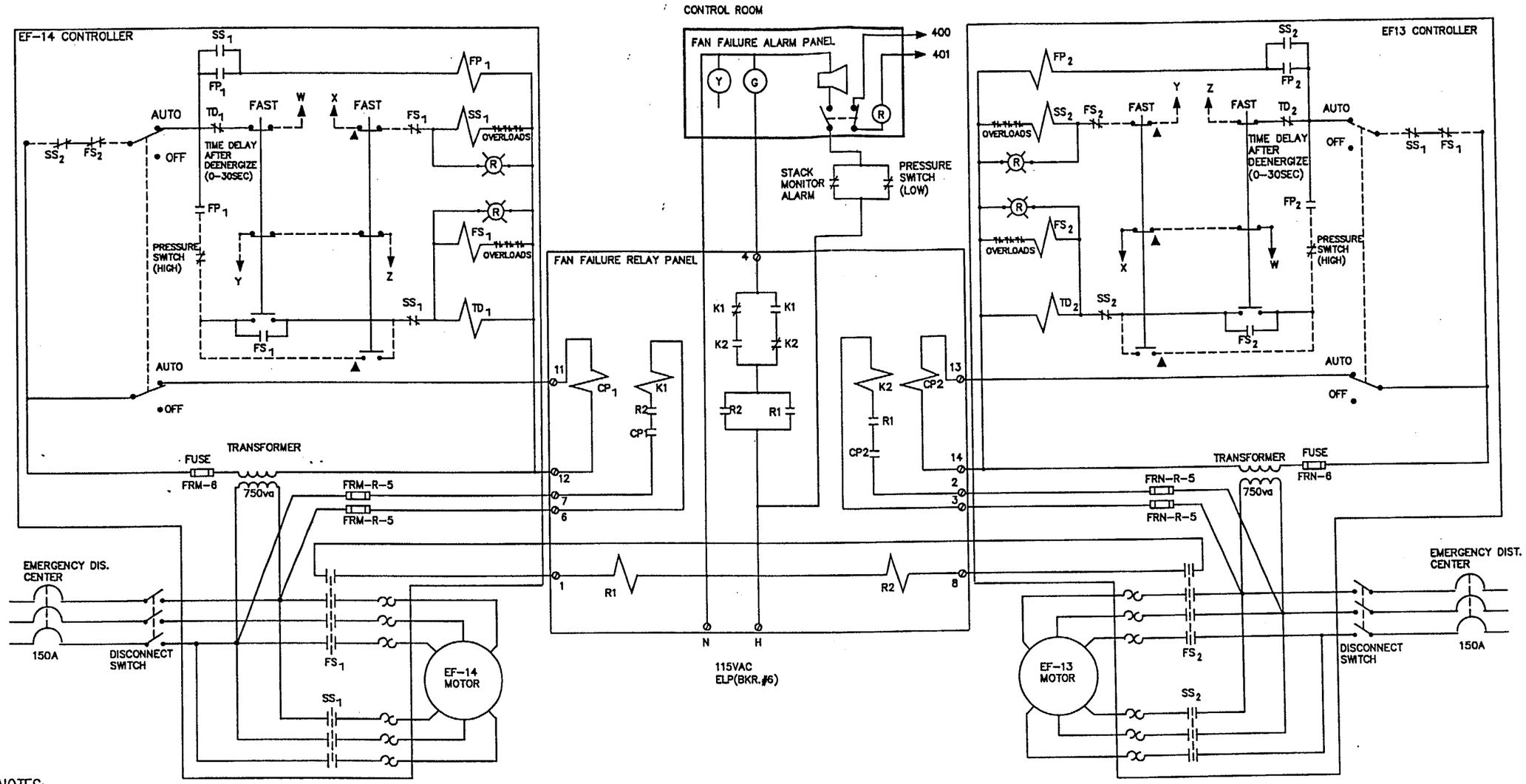

NOTES:

1. TD INSURES FAN COASTS DOWN SUFFICIENTLY BEFORE SHIFTING TO SLOW SPEED.
2. ▲: LOCATED ON 3RD LEVEL NEAR TOVER LADDER.
3. ——— REMOTE WIRING.
4. PRESSURE SWITCH (HIGH), SENSES OVERPRESSURE AND SHIFTS FAN FROM FAST TO SLOW.
5. PRESSURE SWITCH (LOW), SENSES LOSS OF FLOW.
6. FAN FAILURE ALARM PANEL LOGIC.
   BOTH FANS IN AUTO, ONE RUNNING IN FAST ------- GREEN LIGHT
   ALL OTHER CONDITIONS-----NO LIGHT
   LOSS OF FLOW ------- BUZZER

REVISIONS

NO.	DESCRIPTION	INIT.	DATE
8	REDRAWN IN AUTOCAD	JCA	11/21/00
7	Changed title block	THS	12/15/93
6	Completely redrawn for Mod. # 88-7	THS	7/19/90

TITLE

FAN FAILURE WARNING SYS. SCHEMATIC

RESEARCH REACTOR FACILITY
UNIVERSITY OF MISSOURI

DRAWN BY THS | APPROVED | DATE

SHEET NO. 1 OF 1 | DWG. NO. 895

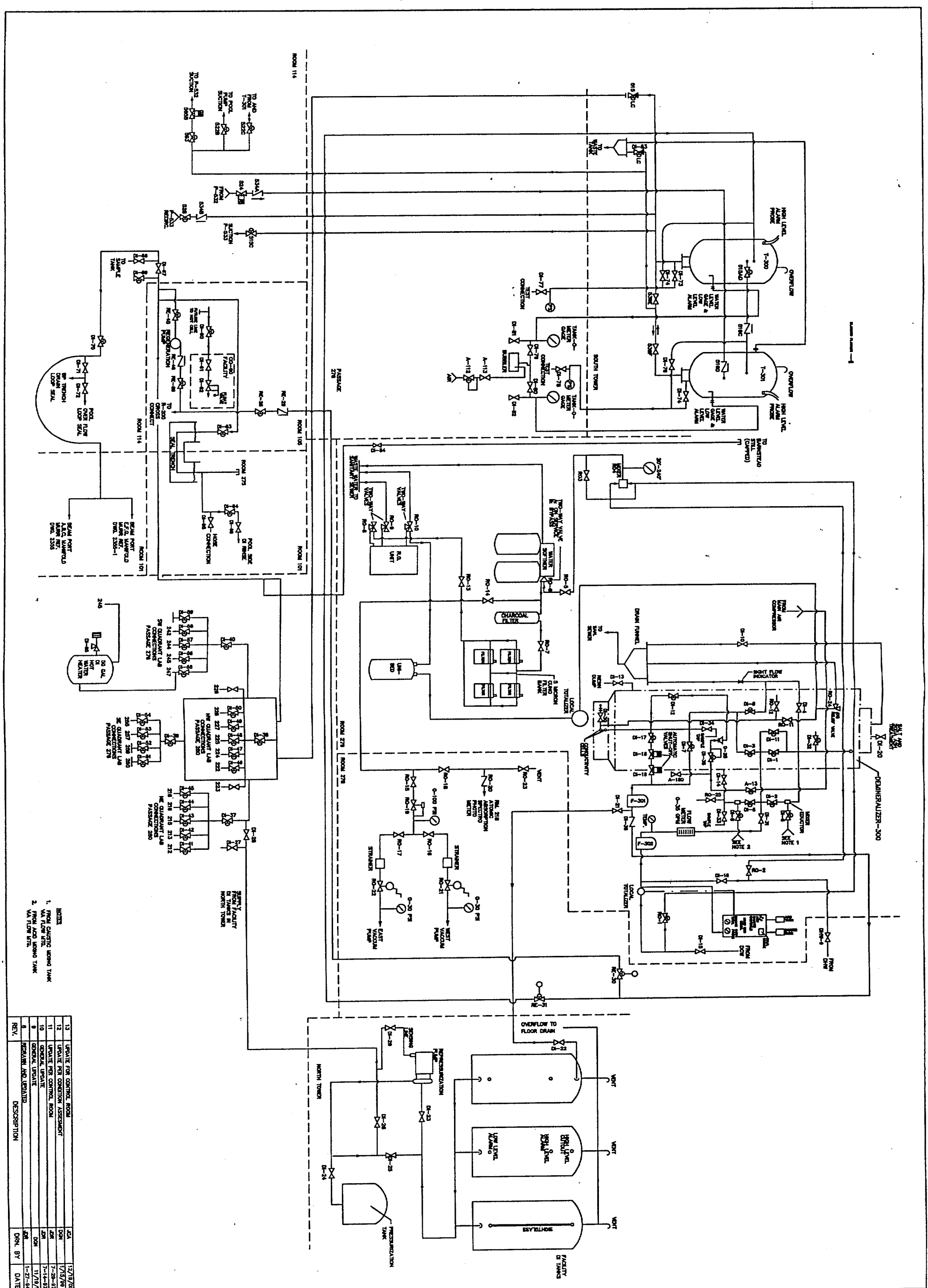
DEIONIZED WATER SYSTEM
UNIVERSITY OF MISSOURI-COLUMBIA
FACILITIES OPERATIONS
research reactor facility
MURR NUMBER: 911
SHEET 1 OF 1
DATE: 1-26-94
DRAWN BY: JDR
CHECKED BY:
ENGINEER:
CODE:
REVISION NUMBER:
REVISION DATE:
DESCRIPTION
DRN. BY
DATE
REV.
13 UPDATE FOR CONTROL ROOM JCA 12/19/00
12 UPDATE PER CONDITION ASSESSMENT DGN 1/15/99
11 UPDATE PER CONTROL ROOM JDR 7-29-97
10 GENERAL UPDATE JDR 7-14-97
9 GENERAL UPDATE DGN 11/19/96
8 REDRAWN AND UPDATED JDR 1-27-94
NOTES
1. FROM CAUSTIC MIXING TANK VIA FLOW MTR.
2. FROM ACID MIXING TANK VIA FLOW MTR.
T-300
T-301
OVERFLOW
HIGH LEVEL ALARM PRIME
WATER LEVEL GAGE & LOW LEVEL ALARM
SOUTH TOWER
NORTH TOWER
PASSAGE 278
ROOM 114
ROOM 105
ROOM 101
ROOM 275
ROOM 276
TO SAMPLE TANK
TO POOL OVERFLOW CONNECT
POOL OVERFLOW LOOP SEAL
TO TRENCH DRAIN LOOP SEAL
BEAM PORT D.C. MANIFOLD DWG. 2306
BEAM PORT D.C. MANIFOLD DWG. 2306-1
CO-60 FACILITY
DRAIN
HOSE CONNECTION
POOL SIDE DI RINSE
RECIRCULATION PUMP
FUTURE LINE TO HOT CELL
TO AND FROM T-301
TO POOL PUMP SUCTION
TO P-532 SUCTION
FROM T-532
SUCTION T-532
TO WASTE
TEST CONNECTION
TANK LEVEL GAGE
BUBBLER
AIR
SEAL TRENCH
50 GAL DI HOT WATER HEATER
SW QUADRANT LAB CONNECTIONS PASSAGE 278
NW QUADRANT LAB CONNECTIONS PASSAGE 280
SE QUADRANT LAB CONNECTIONS PASSAGE 276
NE QUADRANT LAB CONNECTIONS PASSAGE 280
SUPPLY FROM FACILITY DI TANKS IN NORTH TOWER
WATER SOFTENER
TWO-WAY VALVE
R.O. UNIT
CHARCOAL FILTER
UV-RO
5 MICRON CLOTH FILTER BANK
LOCAL TOTALIZER
STRAINER
EAST VACUUM PUMP
WEST VACUUM PUMP
RAL 218 ATOMIC ABSORPTION SPECTRO PHOTO METER
VENT
DRAIN FUNNEL
TO SAN. SEWER
FROM DAW AIR COMPRESSOR
RIGHT FLOW INDICATOR
AUTOMATIC SHUT-OFF VALVE
CONDUCTIVITY
FLOW METER
MIXER EDUCTOR
SEE NOTE 1
SEE NOTE 2
DEMINERALIZER-300
SALT AND SOFTENER TREATMENT
FROM DAW
FROM DCM
OVERFLOW TO FLOOR DRAIN
REPRESSURIZATION PUMP
SEEDING LINE
PRESSURIZATION TANK
FACILITY DI TANKS
SIGHTGLASS
HIGH LEVEL ALARM
LOW LEVEL ALARM
HIGH LEVEL OUTLOUT

SECONDARY LOW SUMP CUTOUT

CALGON POWER DISTRIBUTION

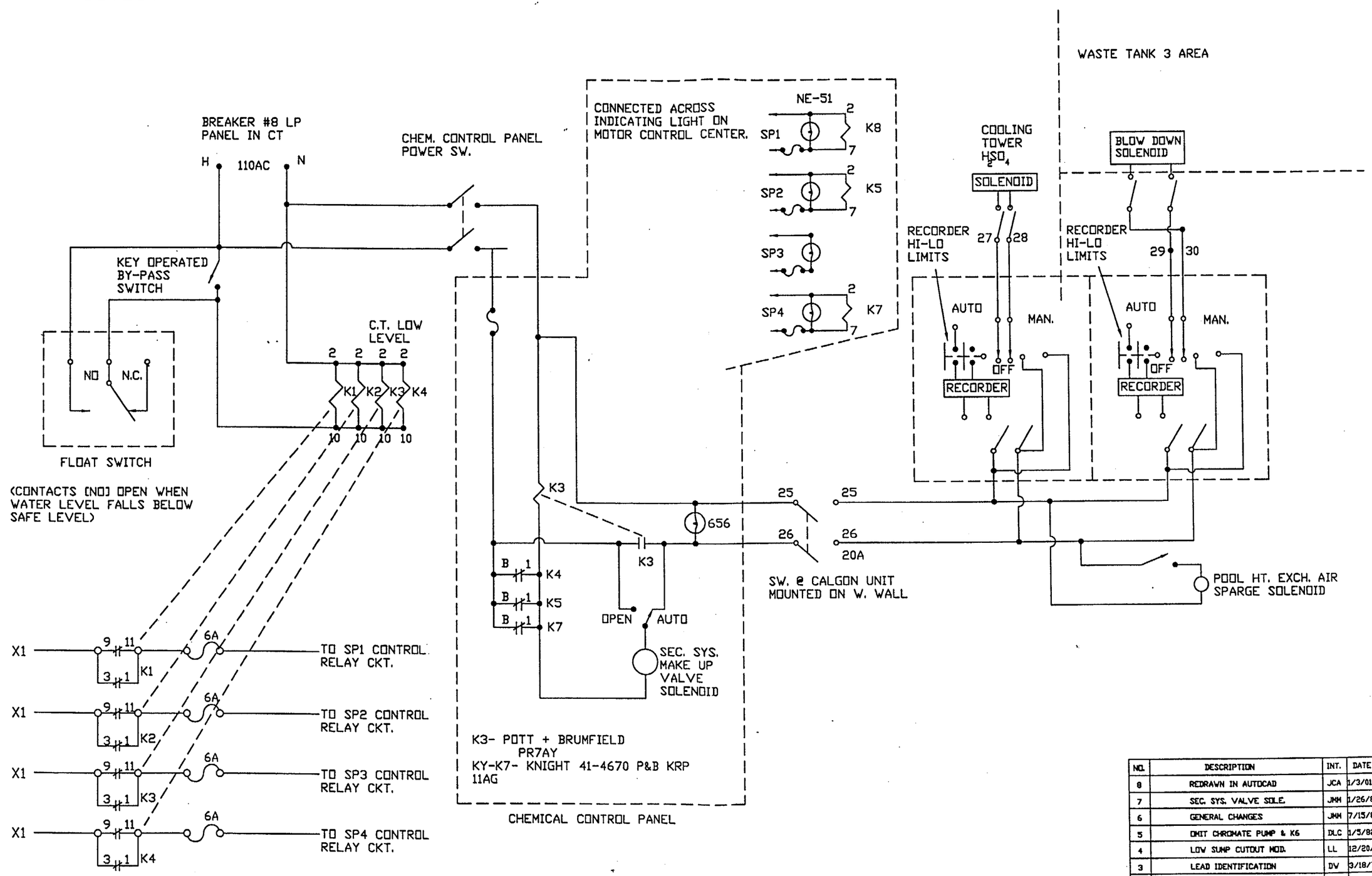

NO.	DESCRIPTION	INT.	DATE
8	REDRAWN IN AUTOCAD	JCA	1/3/01
7	SEC. SYS. VALVE SOLE.	JMH	1/26/88
6	GENERAL CHANGES	JMH	7/15/83
5	OMIT CHROMATE PUMP & K6	DLC	1/5/82
4	LOW SUMP CUTOUT MOD.	LL	12/20/76
3	LEAD IDENTIFICATION	DV	3/18/73
2	SP3 CONTROLS AS WIRED	VN	5/8/73
1	ADDITION OF SP-3 CONTROLS	VS	10/16/72

DATE: 12/30/00
DRAWN BY: jca
CHECKED BY:
ENGINEER:
CODE:
REVISION NUMBER: 8
REVISION DATE: 12/30/00

UNIVERSITY OF MISSOURI-COLUMBIA
FACILITIES OPERATIONS
research reactor facility

SECONDARY LOW SUMP CUTOUT
CALGON POWER DISTRIBUTION

MURR NUMBER: 956

SHEET 1 of 1

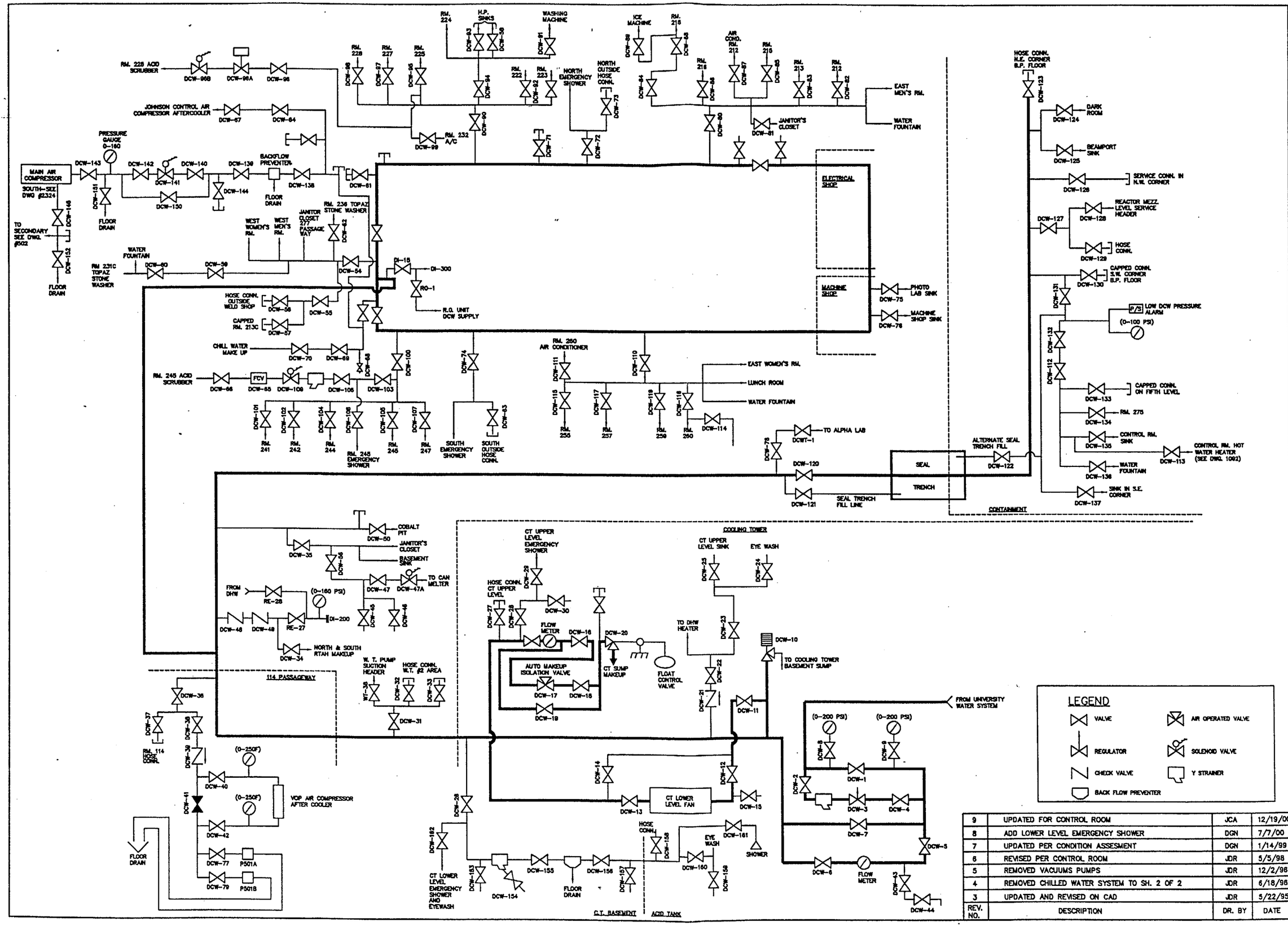

REV. NO.	DESCRIPTION	DR. BY	DATE
9	UPDATED FOR CONTROL ROOM	JCA	12/19/00
8	ADD LOWER LEVEL EMERGENCY SHOWER	DGN	7/7/00
7	UPDATED PER CONDITION ASSESMENT	DGN	1/14/99
6	REVISED PER CONTROL ROOM	JDR	5/5/98
5	REMOVED VACUUMS PUMPS	JDR	12/2/96
4	REMOVED CHILLED WATER SYSTEM TO SH. 2 OF 2	JDR	6/18/96
3	UPDATED AND REVISED ON CAD	JDR	5/22/95

DATE: 2/12/96
DRAWN BY: J. RILEY
CHECKED BY: ENGINEER:
CODE:
REVISION NUMBER: 7
REVISION DATE: 1/14/99

UNIVERSITY OF MISSOURI-COLUMBIA
FACILITY OPERATIONS
research reactor facility

DOMESTIC COLD WATER

MURR NUMBER: 1091

SHEET 1 OF 2

RELAY SCHEDULE

1. Reactor Control Sys. #42
2. Safety Sys. #139
3. Rod Run-In Sys. #140
4. Area Radiation Mon. Sys. #203
5. Annunciator Control #138
6. Neutron Mon. Sys. #40
7. Process Inst. (valves) #41
8. Process Inst. (temp., flow, etc.) #41
9. Process Rad. Mon. Sys. #202
10. Position Ind. Sys. #206
11. Fission Counter Drive #1015
12. Control Blade Drop Timer #1905

RELAY NUMBER	COIL VOLTAGE	COIL FUNCTION	COIL LOC.	CONTACT LOC.	CONTACT NUMBER	CONTACT TYPE	CONTACT FUNCTION
1K1	24V	Pickup when in Auto control	1	1	3-4	NO	Auto shim control prohibit
				1	5-6	NO	Auto shim control prohibit
				1	7-8	NC	Reg. Rod jog prohibit
1K2	24V	Pickup when jog control energized	1	1	3-4	NO	Jog control permissive
				1	5-6	NO	Jog control permissive
					7-8	NC	Spare
1K3	24V	Pickup when Reg. Rod in Auto.	1	5	3-4	NO	Reg. blade out of Auto. Annunc.(5-5)
					5-6	NO	Spare
				1	7-8	NO	Power to Servo Amplifier relay K5
1K4	24V	Pickup when Reg. Blade bottomed	1	5	3-4	NC	Reg Rod Bottomed RRI Annunc. (3-5)
					5-6	NO	Spare
				3	7-8	NO	Rod Run-In input (Opened when on bottom)
1K5	24V	Auto shim control Operate Limit Control	1	1	3-4	NO	Power to Auto Shim timer
				1	5-6	NO	Power to Auto Shim timer (Open at 60%)
				1	7-8	NO	1K5 Lock in
1K6	24V	Auto shim control operate interlock	1		3-4	NO	Spare
					5-6	N O	Spare
				1	7-8	NC	1K5 interlock (Closed when <60%)
1K7	24V	Auto shim control rod insert	1	1	3-4	NO	Rod A insert
				1	5-6	NO	Rod B insert
				1	7-8	NO	Rod C insert
				1	9-10	NO	Rod D insert
					11-12	NO	Spare

RELAY SCHEDULE

RELAY NUMBER	COIL VOLTAGE	COIL FUNCTION	COIL LOC.	CONTACT LOC.	CONTACT NUMBER	CONTACT TYPE	CONTACT FUNCTION
1K8	24V	Drop out on Rod Run-In	3	1	3-4	NO	Reg. rod Auto control disable
					5-6	NO	Spare
				1	7-8	NC	Rod A insert
				1	9-10	NC	Rod B insert
				1	11-12	NC	Rod C insert
				1	13-14	NC	Rod D insert
				1	15-16	NO	Rod withdrawal permissive
1K9	24V	Drop out on Rod Run-In	3	1	3-4	NO	Reg. rod Auto control disable
					5-6	NO	Spare
				1	7-8	NC	Rod A insert
				1	9-10	NC	Rod B insert
				1	11-12	NC	Rod C insert
				1	13-14	NC	Rod D insert
				1	15-16	NO	Rod withdrawal permissive
1K10	24V	Drop out when Reg. rod > or = 60% withdrawn	1		3-4	NO	Spare
				1	5-6	NC	1K5 interlock (Closed when >60%)
				1	7-8	NC	Reg. rod auto control permissive
				1	9-10	NC	Energizes Position Indication light(>60%)
				5	11-12	NO	Reg Blade 60% Withdrawn Annunc. (3-8)
1K11	24V	Drop out when Reg. rod < or = 20% withdrawn	1		3-4	NO	Spare
					5-6	NO	Spare
				1	7-8	NC	Auto shim rod control
				1	9-10	NC	Energize Position Indication light (<20%)
				5	11-12	NO	Reg Rod ≤20% Withdrawn Annunc. (3-7)
1K12	24V	Drop out when Reg. rod < or = 10% withdrawn	1	3	3-4	NO	Rod Run-In input
				1	5-6	NO	1Z5 interlock
					7-8	NO	Spare
				1	9-10	NC	Energizes Position Indication light (<10%)
				5	11-12	NO	Reg Rod ≤10% Withdrawn RRI Annunc. (3-4)

RELAY SCHEDULE

RELAY NUMBER	COIL VOLTAGE	COIL FUNCTION	COIL LOC.	CONTACT LOC.	CONTACT NUMBER	CONTACT TYPE	CONTACT FUNCTION
1K13	24V	Power level interlock	1	2	3-4	NO	Scram input (Green leg)
				5	5-6	NO	Power Level Interlock Scram Annunc. (2-2)
					7-8	NC	Spare
1K16	115V	Energize F.C. drive motor OUT	11	11	3-4	NO	Energize F.C. drive OUT winding
				11	5-6	NO	Energize reference winding
				11	7-8	NO	Energize F.C. drive OUT winding
					9-10	NC	Spare
1K18	115V	Energize F.C. drive motor IN	11	11	3-4	NO	Energize F.C. drive IN winding
					5-6	NO	Spare
				11	7-8	NO	Energize reference winding
				11	9-10	NO	Energize F.C. drive IN winding
1K19	24V	F.C. drive limit FULL IN	1	11	3-4	NO	Full in limit
			11	11	5-6	NO	Energize reference winding
				1,11	7-8	NC	Position light (Full-in)
1K21	24V	F.C. drive limit FULL OUT	1		3-4	NO	Spare
			11	11	5-6	NO	Motor winding
				11	7-8	NO	Full out limit
					9-10	NC	Spare
				1,11	11-12	NC	Position light (Full-out)
1K22	24V	Blade full in "A"	1		3-4	NO	Spare
					5-6	NO	Spare
				1	7-8	NC	Blade A full in indicating light
1K23	24V	Blade full in "B"	1		3-4	NO	Spare
					5-6	NO	Spare
				1	7-8	NC	Blade B full in indicating light
1K24	24V	Blade full in "C"	1		3-4	NO	Spare
					5-6	NO	Spare
				1	7-8	NC	Blade C full in indicating light

RELAY SCHEDULE

RELAY NUMBER	COIL VOLTAGE	COIL FUNCTION	COIL LOC.	CONTACT LOC.	CONTACT NUMBER	CONTACT TYPE	CONTACT FUNCTION
1K25	24V	Blade full in "D"	1		3-4	NO	Spare
					5-6	NO	Spare
				1	7-8	NC	Blade D full in indicating light
1K26	24V	Power level interlock	1	2	3-4	NO	Scram input (Yellow leg)
				5	5-6	NO	Power Level Interlock Scram Annunc. (2-2)
					7-8	NC	Spare
1K30	115V	Rod Control Power unavailable	1		3-4	NO	Spare
				5	5-6	NO	Rod Control Power Unavailable Annunc. (5-9)
					7-8	NO	Spare

RELAY SCHEDULE

RELAY NUMBER	COIL VOLTAGE	COIL FUNCTION	COIL LOC.	CONTACT LOC.	CONTACT NUMBER	CONTACT TYPE	CONTACT FUNCTION
2K8 YELLOW	24V	Scram & Run-In Interlock at 5 & 10 MW (1S8-9)	1	2	3-4	NO	Pressure bypass at 50KW (Yellow leg)
				2	5-6	NO	Pool flow bypass at 50KW (Yellow leg)
					7-8	NC	Spare
2K9 RED	24V	Valve 546A off closed position interlock	7	1	3-4	NO	DPS 929 Interlock Scram
				7	5-6	NO	546A Control
				7	7-8	NO	546B Control
2K10 GREEN	24V	Process Instrument valve 507A/B Position Interlock	7	7	3-4	NO	Pump 501A Interlock
				7	5-6	NO	Pump 501B Interlock
					7-8	NC	Spare
2K11 YELLOW	24V	Process Instrument valve 507A/B Position interlock	7	7	3-4	NO	Valve 527C Control
				7	5-6	NO	Valve 543A control
				7	7-8	NO	Valve 543B control
				7	9-10	NO	Valve 546 control
				1	11-12	NO	Valve 507A/B off open (PLI prohibit 5/10MW)
2K12 YELLOW	24V	Process Instrument valve 509 Position interlock	7	7	3-4	NO	Pump 508A control
				7	5-6	NO	V509 Off Open indication
				2	7-8	NO	Scram Input (Yellow leg)
				5	9-10	NO	Pool Loop Valve 509 Off Open Scram Ann. (5-2)
				7	11-12	NO	Pump 508B control
				7	13-14	NO	Pump 513B control
					15-16	NO	Spare
2K13 YELLOW	24V	Reactor Pressure/Flow Interlock (PS-944A)	7	7	3-4	NO	Pump 501B control
				7	5-6	NO	Valve 543A control
				7	7-8	NO	Valve 507A/B control
				7	9-10	NO	Valve 543B control
				7	11-12	NO	Pump 501A control
				2	13-14	NO	Scram Input (Yellow leg)
				5	15-16	NO	Reactor Loop Low Pressure Scram Ann. (3-3)

RELAY SCHEDULE

RELAY NUMBER	COIL VOLTAGE	COIL FUNCTION	COIL LOC.	CONTACT LOC.	CONTACT NUMBER	CONTACT TYPE	CONTACT FUNCTION
2K1A GREEN	115V	Area Radiation Monitor Isolation/Scram	4	5	3-4	NO	Bldg Air Plenum & Bridge Hi Act. Scram Ann (1-3)
				2	5-6	NO	Scram Input (Green leg)
				1	7-8	NO	Backup Doors Solenoids
				4	9-10	NO	Damper Interlock & Reactor Isolation
2K1B GREEN	115V	Area Radiation Monitor Isolation/Scram	4	5	3-4	NO	Bldg Air Plenum & Bridge Hi Act. Scram Ann (1-3)
				2	5-6	NO	Scram Input (Green leg)
				1	7-8	NO	Backup Doors Solenoids
				4	9-10	NO	Damper Interlock & Reactor Isolation
2K2 YELLOW	115V	Evacuation Alarm System	5	5	3-4	NO	Evacuation or Isolation Scram Annunc. (2-3)
					5-6	NO	Spare
					7-8	NO	Spare
				2	9-10	NO	Scram Input (Yellow leg)
2K3	24V	P-501A running	7		3-4	NO	Spare
					5-6	NO	Spare
				5	7-8	NC	Pump 501A/B on, Valve 507A/B closed Ann (5-6)
2K4 GREEN	24V	Truck Entry Open	5	3	3-4	NO	Rod Run-in Input
				5	5-6	NO	Truck Entry Open RRI Annunc. (2-4)
					7-8	NC	Spare
2K5 YELLOW	24V	Pool below refuel level	7	2	3-4	NO	Scram Input (Yellow leg)
				5	5-6	NO	Pool Below Refuel Level Scram Annunc (6-1)
					7-8	NO	Spare
2K6 YELLOW	24V	Reactor vent tank level Interlock (LC-925B)	7	7	3-4	NO	Valve 552B control
				3	5-6	NO	Rod Run-in Input (Vent tank low level)
				5	7-8	NO	Vent Tank Lo Level RRI Annunc (4-4)
					9-10	NO	Spare
				7	11-12	NC	Valve 552B closed position indication
2K7	24V	Process Instrument valve level Interlock (LC-936)	7		3-4	NO	Spare
				7	5-6	NC	Valve 527B control
					7-8	NC	Spare

RELAY SCHEDULE

RELAY NUMBER	COIL VOLTAGE	COIL FUNCTION	COIL LOC.	CONTACT LOC.	CONTACT NUMBER	CONTACT TYPE	CONTACT FUNCTION
2K14	24V	Process Instrument valve	7	7	3-4	NC	2K25/valve 527D control
		Level Interlock (LC 965)		7	5-6	NO	Valve 543B control
GREEN		Anti-siphon		7	7-8	NO	Valve 543A control
				5	9-10	NO	Anti-siphon line Hi Level RRI Annunc. (5-4)
					11-12	NO	Spare
				3	13-14	NO	Rod Run-In Input
					15-16	NC	Spare
2K15	24V	Process Instrument valve	7	7	3-4	NO	Pump 533 control
		527B position indication			5-6	NO	Spare
		(PS 948B)			7-8	NC	Spare
2K16	24V	Rods not fully inserted	5	1	3-4	NO	Control rod withdrawal prohibit
		Anunc. control interlock		1	5-6	NO	Reg. rod withdrawal prohibit
				2	7-8	NO	Scram reset prohibit
2K17	24V	Nuclear Inst. Anomally	5	1	3-4	NO	Control rod withdrawal prohibit
		Annunc. control interlock		1	5-6	NO	Reg. rod withdrawal prohibit
					7-8	NC	Spare
2K18	24V	Low Count rate Annunciator	5	1	3-4	NO	Control rod withdrawal prohibit
		Control interlock		1	5-6	NO	Reg. rod withdrawal prohibit
					7-8	NC	Spare
2K19	24V	Scram & Run-In bypass	1	2	3-4	NO	Reactor Pressure Scram bypass (Green leg)
		interlock @ 5 & 10MW			5-6	NO	Spare
GREEN		(1S8-9)		3	7-8	NO	Pool level rod run-in bypass
				3	9-10	NO	Anti-siphon rod run-in bypass
				1	11-12	NO	50KW Indication light
				2	13-14	NO	Pool Low Flow bypass (Green leg)
				1	15-16	NC	5MW Indication light

RELAY SCHEDULE

RELAY NUMBER	COIL VOLTAGE	COIL FUNCTION	COIL LOC.	CONTACT LOC.	CONTACT NUMBER	CONTACT TYPE	CONTACT FUNCTION
2K20	24V	Loss of Voltage to Magnet	2	3	3-4	NO	Rod run-in input
		A and B scram		3	5-6	NO	Rod run-in input
YELLOW				1	7-8	NO	Auto control drop out
				12	9-10	NC	Drop timer (Blade A)
				1	11-12	NC	Rod drive test permissive
				12	13-14	NC	Drop timer (Blade B)
					15-16	NC	Spare
2K21	24V	Loss of Voltage to Magnet	2	3	3-4	NO	Rod run-in input
		C and D scram		3	5-6	NO	Rod run-in input
GREEN				1	7-8	NO	Auto control drop out
				12	9-10	NC	Drop timer (Blade C)
				1	11-12	NC	Rod drive test permissive
				12	13-14	NC	Drop timer (Blade D)
					15-16	NC	Spare
2K22	24V	Auto/Man control interlock	7	7	3-4	NO	Valve 507A/B control
		Process control valves		7	5-6	NC	Valve 507A/B control
YELLOW		Switch 1S1 in TEST position		7	7-8	NO	Valve 509 control
				7	9-10	NC	Valve 509 control
				7	11-12	NO	Valve 526 control
				7	13-14	NC	Valve 526 control
				7	15-16	NO	2K32 latch
				7	17-18	NO	Valve 545 control
				7	19-20	NC	Valve 545 control
				7	21-22	NO	Valve 546A control
				7	23-24	NC	Valve 546A control
2K23	24V	Auto/Man control interlock	7	7	3-4	NO	Valve 527A control
		Process control valves		7	5-6	NC	Valve 527A control
GREEN		Switch 1S1 in TEST position		7	7-8	NO	Valve 527B control
				7	9-10	NC	Valve 527B control
				7	11-12	NO	Valve 527C control
				7	13-14	NC	Valve 527C control

RELAY SCHEDULE

RELAY NUMBER	COIL VOLTAGE	COIL FUNCTION	COIL LOC.	CONTACT LOC.	CONTACT NUMBER	CONTACT TYPE	CONTACT FUNCTION
2K23 (Con't) GREEN				7	15-16	NO	Valve 527D control
				7	17-18	NO	Valve 552B control
				7	19-20	NC	Valve 552B control
				7	21-22	NO	Valve 543A control
				7	23-24	NC	Valve 546B control
2K24 GREEN	24V	DPS 928A (Hx. 503A)	7	5	3-4	NO	Low Primary Hx. ΔP Scram Annunc. (4-3)
				7	5-6	NO	Valve 546A control
				7	7-8	NO	Valve 546B control
2K25 YELLOW	24V	Valve 527D Secondary control	7		3-4	NO	Spare
				7	5-6	NO	Valve 527D control
				7	7-8	NC	Valve 527C contrtol
2K26 GREEN	24V	DPS 928B (Hx. 503B)	7	5	3-4	NO	Low Primary Hx. ΔP Scram Annunc. (4-3)
				7	5-6	NO	Valve 546A control
				7	7-8	NO	Valve 546B control
2K27 GREEN	24V	Process Instrument Valves 507A/B interlock	7	7	3-4	NO	Valve 543A control
				7	5-6	NO	Valve 543B control
				5	7-8	NO	Pump 501A/B on, Valve 507A/B closed Ann (5-6)
				7	9-10	NO	Valve 546B control
					11-12	NO	Spare
2K28 GREEN	24V	Reactor Pressure/Flow Interlock (PS-944B)	7	7	3-4	NO	Pump 501B control
				7	5-6	NO	Valve 543A control
				7	7-8	NO	Valve 507A/B control
				7	9-10	NO	Valve 543B control
				7	11-12	NO	Pump 501A control
				2	13-14	NO	Low Pressure Scram input (Green leg)
				5	15-16	NO	Reactor Loop Lo Press Scram Annunc. (3-3)
2K29 GREEN	24V	Auto/Man control interlock Process control valves Switch 1S1 in TEST position	7	7	3-4	NO	2K33 latch
				7	5-6	NO	Valve 543B control
				7	7-8	NO	Valve 546B control
2K30	24V	P-501B running Interlock (LC-925B)	7		3-4	NO	Spare
					5-6	NO	Spare
				5	7-8	NC	Pump 501A/B on, Valve 507A/B closed Ann (5-6)

RELAY SCHEDULE

RELAY NUMBER	COIL VOLTAGE	COIL FUNCTION	COIL LOC.	CONTACT LOC.	CONTACT NUMBER	CONTACT TYPE	CONTACT FUNCTION
2K32 YELLOW	24V	Reactor Pressure/Flow interlock (PS-944A)	7	7	3-4	NO	Maintains 2K13 when 1S1 in other then TEST
					5-6	NO	Spare
					7-8	NO	Spare
2K33 GREEN	24V	Reactor Pressure/Flow interlock (PS-944B)	7	7	3-4	NO	Maintains 2K28 when 1S1 in other then TEST
					5-6	NO	Spare
					7-8	NO	Spare
2K35	115V	Downscale (<95% power)	5		3-4	NC	Nuclepore
					5-6	NO	AIMS cabinet
					7-8	NO	Spare

RELAY SCHEDULE

RELAY NUMBER	COIL VOLTAGE	COIL FUNCTION	COIL LOC.	CONTACT LOC.	CONTACT NUMBER	CONTACT TYPE	CONTACT FUNCTION
K1		Drawer Inoperative Ch. 1	5	5 5	1 2	NO NO	Nuclear Instrument Anomaly Annunc. (1-10) Rod Withdraw Prohibit (2K17)
K2		Drawer Inoperative Ch. 2	5	5 5	1 2	NO NO	Nuclear Instrument Anomaly Annunc. (1-10) Rod Withdraw Prohibit (2K17)
K3		Drawer Inoperative Ch. 3	5	5 5	1 2	NO NO	Nuclear Instrument Anomaly Annunc. (1-10) Rod Withdraw Prohibit (2K17)
K4		Drawer Inoperative Ch. 4	5	5 5	1 2	NO NO	Nuclear Instrument Anomaly Annunc. (1-10) Rod Withdraw Prohibit (2K17)
K5		Drawer Inoperative Ch. 5	5	5 5	1 2	NO NO	Nuclear Instrument Anomaly Annunc. (1-10) Rod Withdraw Prohibit (2K17)
K6		Drawer Inoperative Ch. 6	5	5 5	1 2	NO NO	Nuclear Instrument Anomaly Annunc. (1-10) Rod Withdraw Prohibit (2K17)
K7		Spare			1 2		
K8		Spare			1 2		
K9 YELLOW		DPS 928B bypass	5	5	1 2	NO	Scram bypass DPS 928B
K10		Channel 1 Low Count Rate	5	5 5	1 2	NO NO	Chan. 1 Low Count Rate Annunc. (1-6) Rod Withdraw Prohibit (2K18)
K11		Channel 2 Period ≥ 30 sec.	5	5	1 2	NO	Period Auto Control Interlock
K12 YELLOW		Channel 2 Period Scram	5	5	1 2	NO	Chan. 2 & 3 Period Scram Annunc. (1-1)
K13		Channel 2 Period Run-In	5	5	1 2	NO	Chan. 2 & 3 Short Period Rod Run-In Ann. (1-4)
K14		Channel 4 Power Run-In	5	5	1 2	NO	Chan. 4,5 & 6 High Power Rod Run-In Ann. (1-5)
K15		Channel 3 Period ≥ 30 sec.	5	5	1 2	NO	Period Auto Control Interlock
K16		Channel 3 Period Scram	5	5	1 2	NO	Chan. 2 & 3 Period Scram Annunc. (1-1)

RELAY SCHEDULE

RELAY NUMBER	COIL VOLTAGE	COIL FUNCTION	COIL LOC.	CONTACT LOC.	CONTACT NUMBER	CONTACT TYPE	CONTACT FUNCTION
K17		Channel 3 Period Run-In	5	5	1 2	NO	Chan. 2 & 3 Short Period Rod Run-In Ann. (1-4)
K18		Channel 5 Power Level Run-In	5	5	1 2	NO	Channel 4,5 & 6 Hi Power Rod Run-In Ann. (1-5)
K19		Channel4 Power Level Scram	5	5	1 2	NO	Channel 4,5 & 6 Hi Power Scram Ann. (1-2)
K20		Channel 5 Power Level Scram	5	5	1 2	NO	Channel 4,5 & 6 Hi Power Scram Ann. (1-2)
K21		Channel 6 Power Level Scram	5	5	1 2	NO	Channel 4,5 & 6 Hi Power Scram Ann. (1-2)
K22		Fission Product Mon. Upscale	5	5	1 2	NO	Reactor Coolant Loop Hi Activity Annunc. (1-9)
K23		Spare			1 2		
K24		Secondary Coolant Mon. Upscale	5	5	1 2	NO	Secondary Coolant Loop Hi Activity Annunc. (1-8)
K25 YELLOW		Pressurizer Low Pressure PS (low) 938	5	5 5	1 2	NO NO	Reactor Loop Lo Pressure Scram Annunc. (3-3) Reactor Loop Lo Pressure Scram Input
K26 GREEN		Pressurizer High Pressure PS (high) 939	5	5 5	1 2	NO NO	Pressurizer Hi Pressure Scram Annunc. (3-2) Pressurizer Hi Pressure Scram Input
K27 YELLOW		Rx. Loop Hx. Inlet High Temp. Alarm 953B	5	5 5	1 2	NO NO	Reactor Loop Hi Temp Scram Annunc. (4-1) Reactor Loop Hi Temp Scram Input
K28 GREEN		Pressurizer Low Level LC (low) 935	5	5 5	1 2	NO NO	Pressurizer Lo Level Scram Annunc. (5-1) Pressurizer Lo Level Scram Input
K29		Spare			1 2		
K30 YELLOW		Rx. Loop Low Flow (Hx. 503A) Alarm 920A	5	5 5	1 2	NO NO	Rx. Loop Lo Flow Scram Annunc. (3-1) Rx. Loop Lo Flow Scram Input
K31 YELLOW		Pool Loop Low Flow (Hx. 521B) Alarm 920B	5	5 5	1 2	NO NO	Pool Loop Lo Flow Scram Annunc. (5-3) Pool Loop Lo Flow Scram Input
K32		Channel 6 Power Level Run-In	5	5	1 2	NO	Chan. 4, 5 & 6 High Power Rod Run-In Ann (1-5)

RELAY SCHEDULE

RELAY NUMBER	COIL VOLTAGE	COIL FUNCTION	COIL LOC.	CONTACT LOC.	CONTACT NUMBER	CONTACT TYPE	CONTACT FUNCTION
K33		Pool Level Low	5	5	1	NO	Pool Level Lo Rod Run-In Annunc. (4-5)
		LS-910		5	2	NO	Pool Level Lo Rod Run-In Input
K34		Spare			1		
					2		
K35		Spare			1		
					2		
K36		Spare			1		
					2		
K37		Pool Loop Low Flow (Hx. 521A)	5	5	1	NO	Pool Loop Lo Flow Scram Annunc. (5-3)
GREEN		Alarm 920D		5	2	NO	Pool Loop Lo Flow Scram Input
K38		Rx. Loop Low Flow (Hx. 503B)	5	5	1	NO	Rx. Loop Lo Flow Scram Annunc. (3-1)
GREEN		Alarm 920C		5	2	NO	Rx. Loop Lo Flow Scram Input
K39		Valve S1 on Limit	5	5	1	NO	Valve S1 on Limit Annunc. (4-9)
		LS1-1 & LS2-1			2		
K40		Rod A Magnet Switch	5	5	1	NO	Rod not in contact with magnet Rod Run-IN Input
				5	2	NO	Rod not in contact with magnet RRI Annunc (2-5)
K41		Rod A Magnet Switch	5	5	1	NO	Controls K49
				5	2	NO	Controls K49 with K48
K42		Rod B Magnet Switch	5	5	1	NO	Rod not in contact with magnet Rod Run-IN Input
				5	2	NO	Rod not in contact with magnet RRI Annunc (2-5)
K43		Rod B Magnet Switch	5	5	1	NO	Controls K51
				5	2	NO	Controls K51 with K50
K44		Rod C Magnet Switch	5	5	1	NO	Rod not in contact with magnet Rod Run-IN Input
				5	2	NO	Rod not in contact with magnet RRI Annunc (2-5)
K45		Rod C Magnet Switch	5	5	1	NO	Controls K53
				5	2	NO	Controls K53 with K52
K46		Rod D Magnet Switch	5	5	1	NO	Rod not in contact with magnet Rod Run-IN Input
				5	2	NO	Rod not in contact with magnet RRI Annunc (2-5)
K47		Rod D Magnet Switch	5	5	1	NO	Controls K55
				5	2	NO	Controls K55 with K54
K48		Rod A Lower Limit Switch	5	5	1	NO	Rods Fully Inserted Anunc. (3-6)
				5	2	NO	Controls K49 with K41

RELAY SCHEDULE

RELAY NUMBER	COIL VOLTAGE	COIL FUNCTION	COIL LOC.	CONTACT LOC.	CONTACT NUMBER	CONTACT TYPE	CONTACT FUNCTION
K49		Rod A Magnet Engaged and on	5	5	1	NO	Rods not Fully Inserted withdrawal prohibit 2K16
		Lower Limit		5	2	NO	K49
K50		Rod B Lower Limit Switch	5	5	1	NO	Rods Fully Inserted Anunc. (3-6)
				5	2	NO	Controls K51 with K43
K51		Rod B Magnet Engaged and on	5	5	1	NO	Rods not Fully Inserted withdrawal prohibit 2K16
		Lower Limit		5	2	NO	K51
K52		Rod C Lower Limit Switch	5	5	1	NO	Rods Fully Inserted Anunc. (3-6)
				5	2	NO	Controls K53 with K45
K53		Rod C Magnet Engaged and on	5	5	1	NO	Rods not Fully Inserted withdrawal prohibit 2K16
		Lower Limit		5	2	NO	K53
K54		Rod D Lower Limit Switch	5	5	1	NO	Rods Fully Inserted Anunc. (3-6)
				5	2	NO	Controls K55 with K47
K55		Rod D Magnet Engaged and on	5	5	1	NO	Rods not Fully Inserted withdrawal prohibit 2K16
		Lower Limit		5	2	NO	K55
K56		Spare			1		
					2		
K57		Spare			1		
					2		
K58		Channel 4 Downscale (95%)	5	5	1	NO	Channel 4, 5 & 6 Downscale Annunc. (6-1)
					2		
K59		Channel 5 Downscale (95%)	5	5	1	NO	Channel 4, 5 & 6 Downscale Annunc. (6-1)
					2		
K60		Channel 6 Downscale (95%)	5	5	1	NO	Channel 4, 5 & 6 Downscale Annunc. (6-1)
					2		

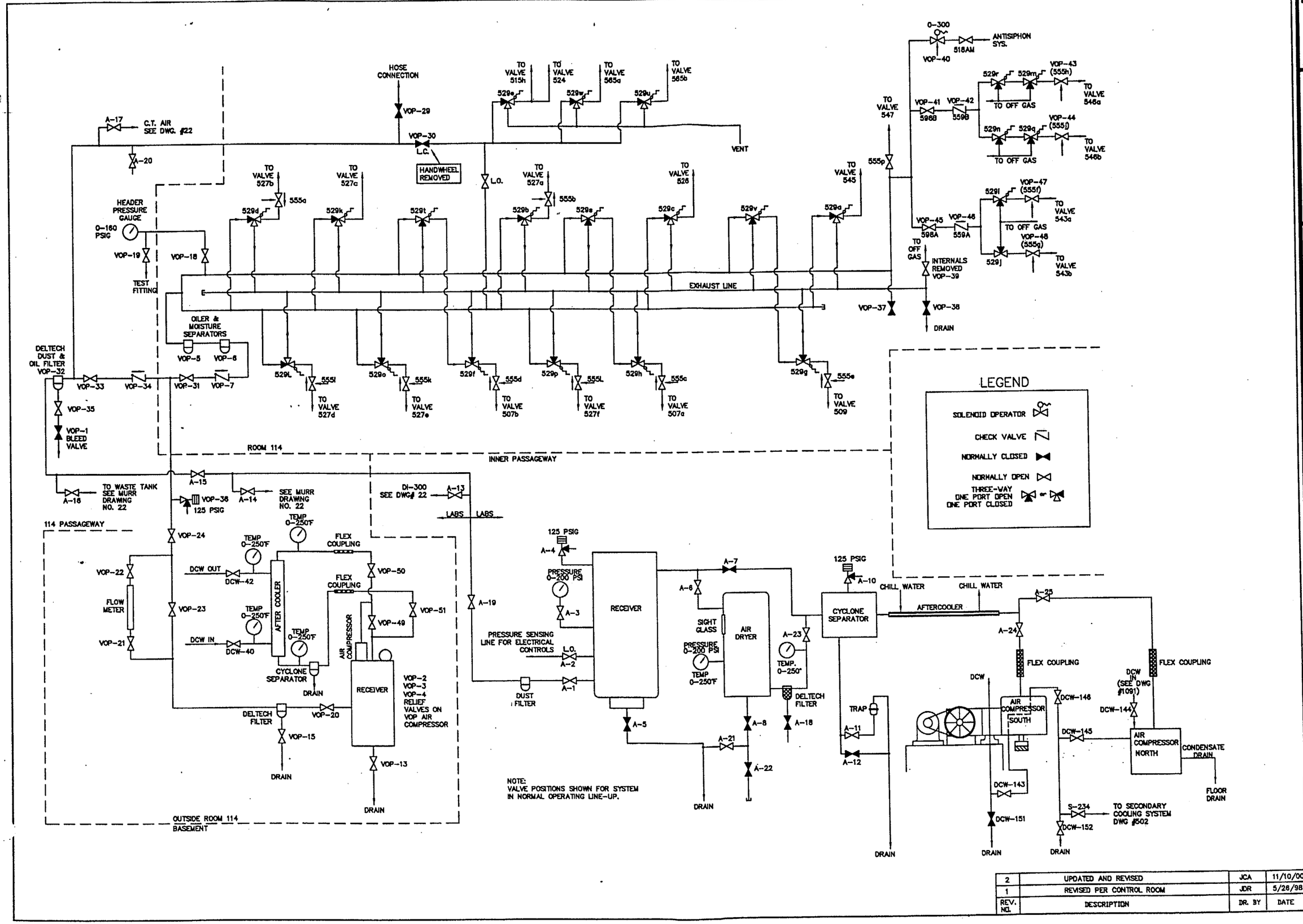

REV. NO.	DESCRIPTION	DR. BY	DATE
2	UPDATED AND REVISED	JCA	11/10/00
1	REVISED PER CONTROL ROOM	JDR	5/26/98

seal

DATE: 2/9/98
DRAWN BY: dgn
CHECKED BY: ENGINEER:
CODE:
REVISION NUMBER: 1
REVISION DATE: 5/26/98

UNIVERSITY OF MISSOURI-COLUMBIA
FACILITY OPERATIONS
research reactor facility

VALVE OPERATION & AIR SYSTEM (REPLACES DRAWING NO. 503)

MURR NUMBER: 2324

SHEET 1 OF 1

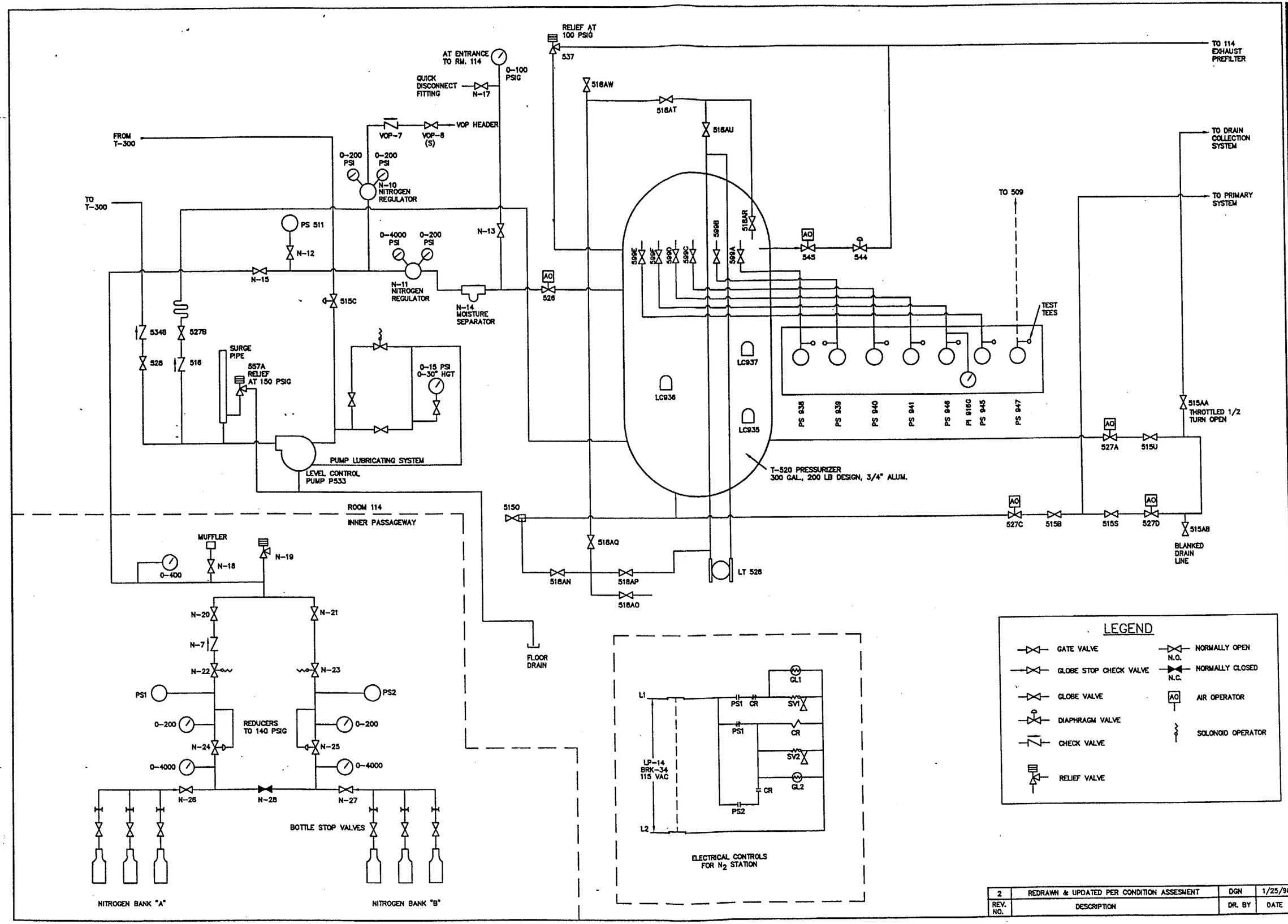

REV. NO.	DESCRIPTION	DR. BY	DATE
2	REDRAWN & UPDATED PER CONDITION ASSESMENT	DGN	1/25/98

DATE: 11/10/98
DRAWN BY: dgn
CHECKED BY:
ENGINEER:
CODE:
REVISION NUMBER: 2
REVISION DATE: 11/10/98

UNIVERSITY OF MISSOURI-COLUMBIA
FACILITY OPERATIONS
research reactor facility

PRESSURIZER/ NITROGEN SYSTEM

(REPLACES MURR DRAWING NO. 195)

MURR NUMBER: 2325

SHEET 1 OF 1

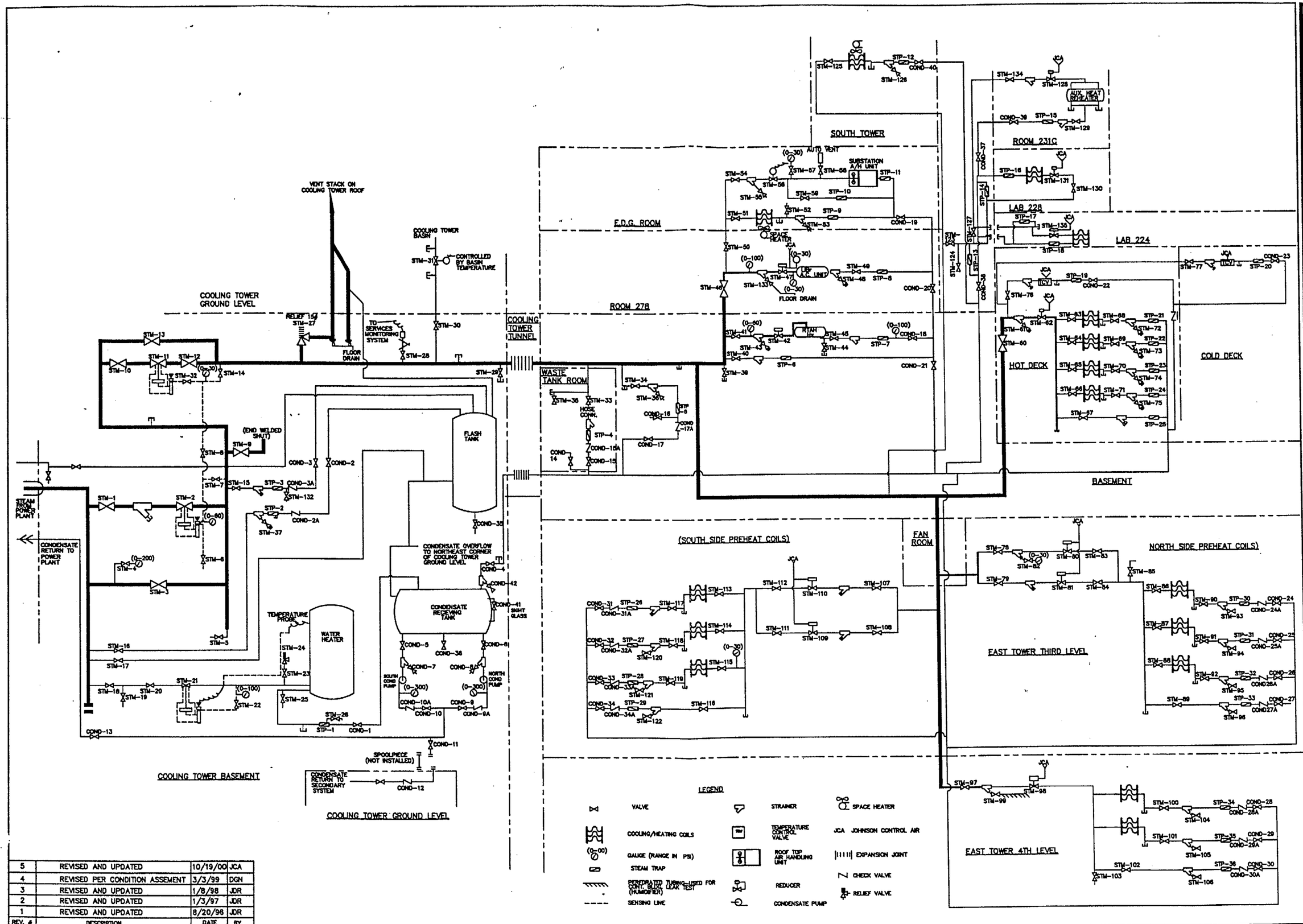

REV. #	DESCRIPTION	DATE	BY
5	REVISED AND UPDATED	10/19/00	JCA
4	REVISED PER CONDITION ASSEMENT	3/3/99	DGN
3	REVISED AND UPDATED	1/8/98	JDR
2	REVISED AND UPDATED	1/3/97	JDR
1	REVISED AND UPDATED	8/20/96	JDR

seal

DATE: 8-22-94
DRAWN BY: JDR
CHECKED BY: ENGINEER:
CODE:
REVISION NUMBER: 3
REVISION DATE: 1/8/98

UNIVERSITY OF MISSOURI—COLUMBIA
FACILITIES OPERATIONS
research reactor facility

STEAM AND CONDENSATE SYSTEM

MURR NUMBER: 2391

SHEET 1 OF 1

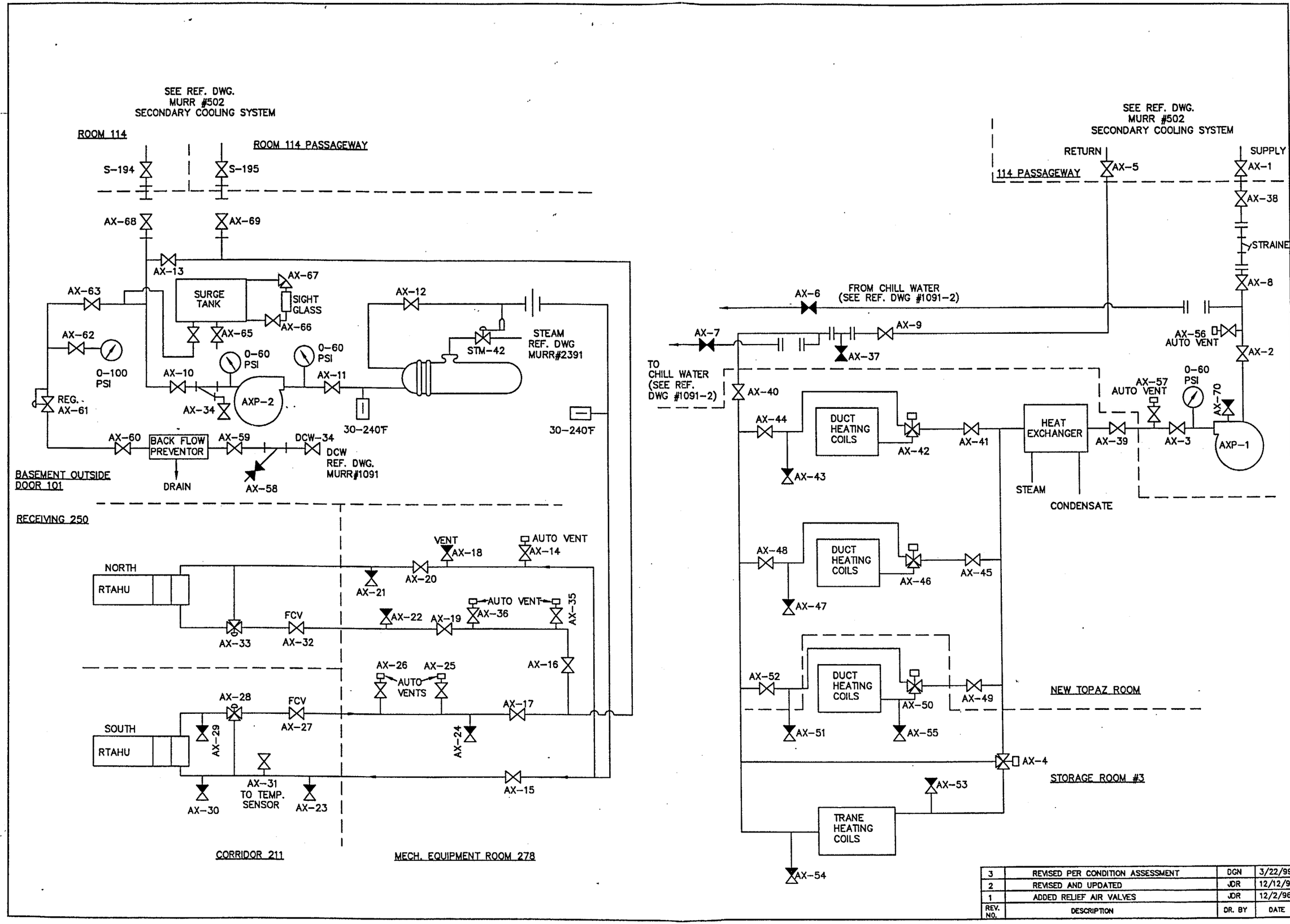

REV. NO.	DESCRIPTION	DR. BY	DATE
3	REVISED PER CONDITION ASSESSMENT	DGN	3/22/99
2	REVISED AND UPDATED	JDR	12/12/96
1	ADDED RELIEF AIR VALVES	JDR	12/2/96

seal

DATE: 2/26/96
DRAWN BY: J. RILEY
CHECKED BY: ENGINEER:
CODE:
REVISION NUMBER: 2
REVISION DATE: 12/12/96

UNIVERSITY OF MISSOURI-COLUMBIA
FACILITY OPERATIONS
research reactor facility

AUXILIARY HEAT SYSTEM

MURR NUMBER: 2432

SHEET 1 OF 1

NO. REV.	DESCRIPTION	DR. BY	DATE
1	REPLACED & REROUTED WATER MAIN	JDR	4/24/98
2	UPDATED PER CONDITION ASSESMENT	DGN	6/11/99
3	RELOCATED & REPLACED FIRE HYDRANT FH-01365, ADDED CONNECTION FOR TOB 4 SPRINKLER SYSTEM, AND ADDED (2) ISOLATION VALVES, ON BOTH SIDES OF EMER. POOL FILL FOR ISOLATION OF FIRE LINE LOOP	DGN	11/7/99

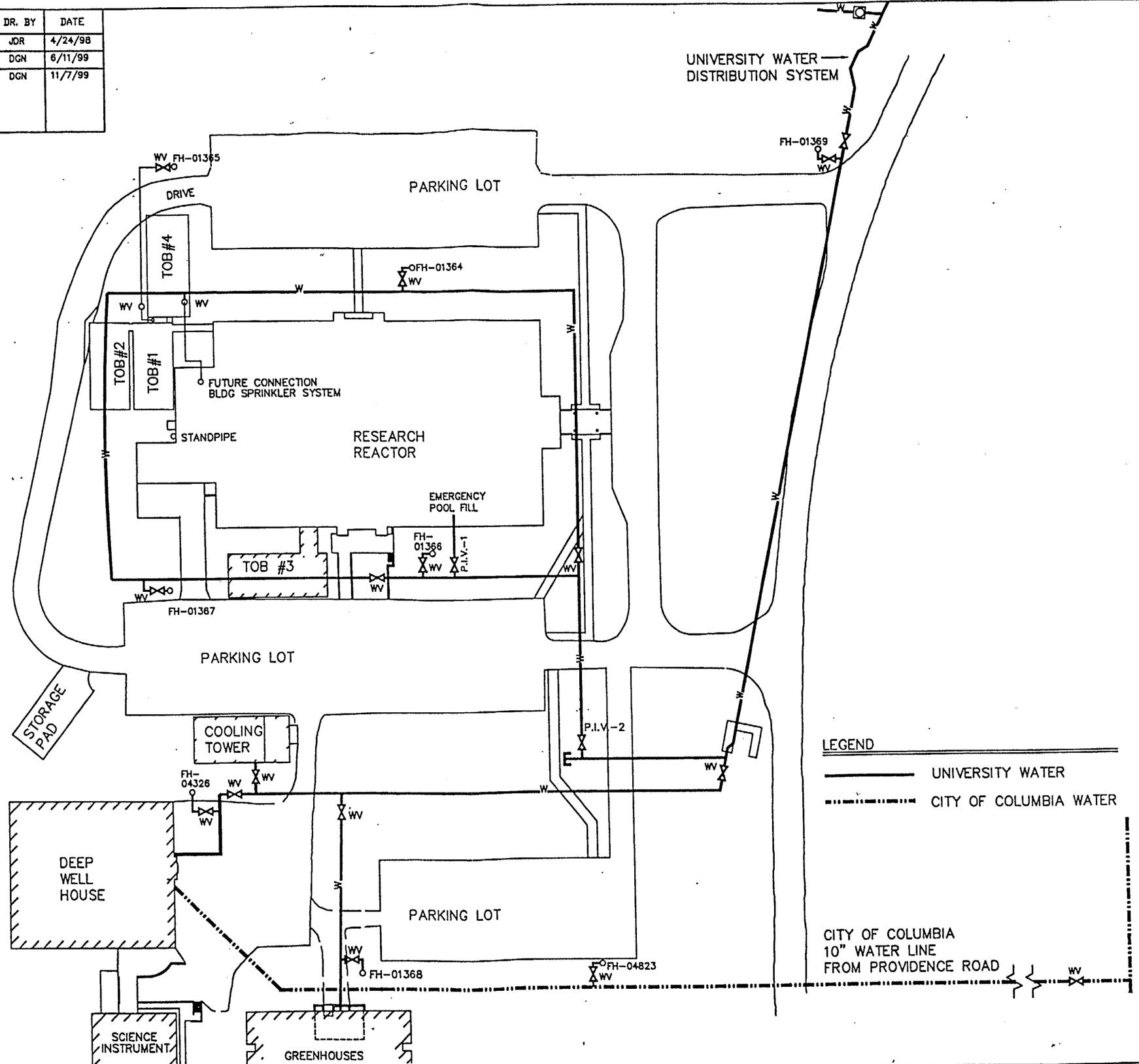

DATE: 1/23/98
DRAWN BY: D.G.N.
CHECKED BY: ENGINEER:
CODE:
REVISION NUMBER:
REVISION DATE:

UNIVERSITY OF MISSOURI-COLUMBIA
FACILITIES OPERATIONS
research reactor facility

FIRE LINE LOOP AT THE RESEARCH REACTOR CENTER

MURR NUMBER: 2439

SHEET 1 of 1

VALVE TYPES

- GLOBE VALVE
- GATE VALVE
- BALL VALVE
- BUTTERFLY VALVE
- NEEDLE VALVE
- RELIEF VALVE
- THREE-WAY VALVE
- FOUR-WAY VALVE
- ANGLE VALVE
- CHECK VALVE
- STOP CHECK VALVE
- DIAPHRAGM VALVE
- FLOAT VALVE
- COCK VALVE

VALVE POSITIONS

- NORMALLY CLOSED
- LOCK CLOSED LC
- NORMALLY OPEN
- LOCKED OPEN LO
- THROTTLED OPEN TO
- FAILS OPEN FO
- FAILS CLOSED FC
- FAILS AS IS FAI
- THREE-WAY ONE PORT OPEN ONE PORT CLOSED or

VALVE OPERATORS

- AIR OPERATOR A
- MOTOR OPERATOR M
- SOLENOID OPERATOR
- HYDRAULIC OPERATOR H
- REACH-ROD OPERATOR

MISCELLANEOUS COMPONENTS

- REDUCER
- FLANGE
- BLANKED FLANGED
- PIPE PLUG
- SCREW CAP
- REMOVABLE SPOOL
- LOOP SEAL
- Y-STRAINER
- ATMOSPHERIC VENT
- VACUUM BREAKER
- LEVEL CONTROL VALVE LCV
- FLOW CONTROL VALVE FVC
- TEMPERATURE CONTROL VALVE TCV
- PRESSURE CONTROL VALVE PCV
- STEAM TRAP
- PIPE SIZE 2"
- EXPANSION JOINT
- TANK
- RUPTURE DISK
- BACK FLOW PREVENTER

FLOW/PRESSURE MEASUREMENT OR SENSING

NOTE: THE LOWER HALF OF THE MEASUREMENT/SENSING SYMBOLS IS RESERVED FOR THE INDENTIFICATION OF THE COMPONENT

- ORIFICE
- VENTURI
- EDUCTOR
- PITOT TUBE
- PRESSURE REGULATOR W/ EXTERNAL SENSING
- PRESSURE REGULATOR W/ INTERNAL SENSING
- PRESSURE GAGE (REMOTE) PI 0-30 PSIG
- PRESSURE GAGE (LOCAL) PI 0-30 PSIG
- PRESSURE SENSOR HIGH PSH
- PRESSURE SENSOR LOW PSL
- PRESSURE TRANSMITTER PT
- DIFFERENTIAL PRESSURE SENSOR/TRANSMITTER DPS
- THERMOCOUPLE (WITH WELL) TC
- TEMPERATURE ELEMENT (WITH WELL) TE
- CONDUCTIVITY CELL CE
- CONDUCTIVITY INDICATOR CI
- TEMPERATURE INDICATION (LOCAL) TI 0-100°
- TEMPERATURE INDICATION (REMOTE) TI 0-100°
- TEMPERATURE TRANSMITTER TT
- TEMPERATURE RECORDER TR
- FLOW RECORDER FR
- DIFFERENTIAL TEMPERATURE INDICATOR DTI
- TEMPERATURE CONTROLLER TC
- AMPLIFIER A
- POWER SUPPLY UNIT PSU
- SQUARE ROOT CONVERTOR SQ
- SUMMER SUM
- DUAL ALARM UNIT ALM
- ALARM LOW AL
- ALARM HIGH AH
- LEVEL SENSOR LS
- LEVEL CONTROLLER HIGH LCH
- LEVEL CONTROLLER LOW LCL
- LEVEL TRANSMITTER LT
- CALIBRATION WELL

PUMPS, HEAT EXCHANGERS AND FANS

- CENTRIFICAL PUMP
- RECIPROCATING PUMP
- SUBMERSIBLE PUMP
- ROTARY PUMP
- CENTRIFICAL FAN
- VANE AXIAL FAN
- HEAT EXCHANGER PLATE TYPE
- HEAT EXCHANGER SHELL & TUBE TYPE
- ROOF TOP AIR HANDLER
- SPACE HEATER
- COOLING / HEATING COILS

PIPING SYMBOLS

- PROCESS FLOW LINE
- PNEUMATIC (AIR) LINE
- INSTRUMENT SIGNAL

ABBREVIATIONS

VOP = VALVE OPERATION SYSTEM
JCA = JOHNSON CONTROL AIR
CS = CONTROL SYSTEM
AX = AUXILIARY HEATING & COOLING SYSTEM
DCW = DOMESTIC COLD WATER
GPM = GALLONS PER MINUTE
CT = COOLING TOWER
PSIG = POUNDS PER SQUARE INCH GAUGE
PSIA = POUNDS PER SQUARE INCH ABSOLUTE
PSID = POUNDS PER SQUARE INCH DIFFERENTIAL
LC = LEVEL CONTROLLER
PS = PRESSURE SWITCH
QDC = QUICK DISCONNECT FITTING
EPF = EMERGENCY POOL FILL
FPW = FIRE PROTECTION WET
FPD = FIRE PROTECTION DRY

NOTE:
SYMBOLS AND ABBREVIATIONS ARE FROM THE FOLLOWING RESOURCES:

1). DOE FUNDAMENTALS HANDBOOK
ENGINEERING SYMBOLOGY, PRINTS AND DRAWINGS
VOLUMES 1 & 2
DOE Technical Standards Home Page
(http: //apollo.ostl.gov/techstds/techstds.htm)

2). ANSI/ASME Y32.2.3-1949(R1988) REAFFIRMED 1994
GRAPHICAL SYMBOLS FOR PIPE FITTINGS, VALVES AND PIPING

3). MURR NRC LICENSED PERSONNEL AND ENGINEERING STAFF

REV. NO.	DESCRIPITION	DRAWN BY	DATE

DATE: 4/7/99
DRAWN BY: dgn
CHECKED BY: ENGINEER:
CODE:
REVISION NUMBER:
REVISION DATE:

UNIVERSITY OF MISSOURI-COLUMBIA
FACILITY OPERATIONS
research reactor facility

MURR PRINT LEGEND
SYMBOLS AND ABBREVIATIONS
(COMMONLY USED)

MURR NUMBER: 2522

SHEET 1 OF 1