NEXUS TECHNICAL SERVICES CORPORATION
125 Fairfield Way, Suite 380
Bloomingdale, Illinois 60108

QA RECORD

December 31, 1999

Mr. Al Casillo
Fire Protection Program Manager
Commonwealth Edison Company
Dresden Nuclear Power Station
6500 North Dresden Road
Morris, IL 60450

Subject: **Dresden Station Units 2 and 3**
3M Fire Wrap Qualification Evaluation
NTSC Project 99-40540
Dresden Report No. 12-N208-05

Dear Mr. Casillo,

The subject qualification report is attached for your use. This report resolves Dresden Station 3M fire wrap issues and qualifies the 3M configurations identified in the scope of this project. Qualification of the riser enclosure on the outside of the west wall of the Control Room is contingent upon replacing a single stainless steel support band. This band was examined during this evaluation, and it was found damaged.

The Station should take the following actions related to this report:

- Replace the damaged stainless steel band on the riser enclosure on the outside of the west wall of the Control Room. Action Request #990068541 was written to replace the damaged band.
- Incorporate the subject report in the FPPDP.

If you have any questions, please give me a call at (508) 829-8062 or Tom McCormack at (630) 893-2277, ext. 12.

Sincerely,
Nexus Technical Services Corporation

By: Robert A. Jackson
Robert A. Jackson
Staff Engineer

Attachments: Fire Wrap Qualification Report

cc: Tom McCormack, NTSC
Don Mershon, NTSC
Pete Griffin, SWEC
Russell Peak, ComEd
Bob Vandura, ComEd
Mike Dillon, ComEd

Telephone: (630) 893-2277 • Fax: (630) 893-2401 • e-mail: ntsceng@nexus-tech.com

Retain Until Year

QA RECORD

COMMONWEALTH EDISON COMPANY
DRESDEN NUCLEAR STATION
UNITS 2 & 3

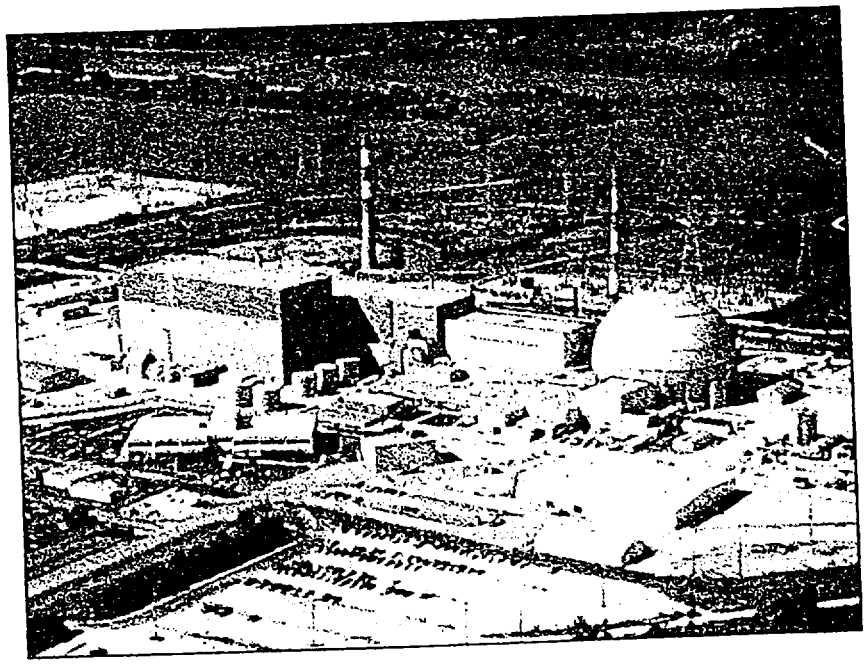

99-40540
3M Fire Wrap Qualification Evaluation

(Dresden Report No. 12-N208-05)

Revision 0

December 31, 1999

Prepared By: Nexus Technical Services Corp.
http://www.nexus-tech.com/

Dresden Nuclear Station - Units 2/3
3M Fire Wrap Qualification Evaluation

NTSC Report No. 99-40540
(Dresden Report No. 12-N208-05)
Revision 0
Date: 12/31/99

Prepared By: FOR
Robert A. Jackson

Reviewed By:
Donald F. Merhson

Approved By:
Thomas J. McCormack, P.E.

Nexus Technical Services Corporation
125 Fairfield Way, Suite 380
Bloomingdale, IL 60108
Phone: 630-893-2277
Fax: 630-893-2401

1.0 Executive Summary

Dresden Station 3M one-hour fire wrap systems were installed to protect certain electrical components to comply with 10CFR50, Appendix R. In 1993 the 3M Fire Wrap System Installation and Fire Test Review Report No. 93-143 was performed to document the adequacy of the Station's 3M fire wrap configurations. The report identified that some technical evaluations for the 3M fire wrap configurations were not readily available. This report provides the technical evaluations to address the 3M fire wrap configurations in which qualification documentation was not readily available.

Table of Contents

1.0 Executive Summary 1
2.0 Background 3
3.0 Purpose 4
4.0 Scope 4
5.0 Licensing and Design Basis Commitments 4
6.0 References 5
7.0 Definitions 6
8.0 Evaluation Methodology and Results 6
8.1 Description 6
8.2 Safe Shutdown Equipment 12
8.3 Fire Protection Equipment 13
8.4 Fire Hazards Analysis 15
9.0 Conclusions 17
9.1 Cable trays 17
9.2 Riveted banding 17
9.3 Welded banding 17
9.4 Cross Banding 19
9.5 Deviations 19
10.0 Attachments 19

2.0 Background

In 1993 the 3M Fire Wrap System Installation and Fire Test Review Report No. 93-143 (Ref. 4) was issued to document the adequacy of the Station's 3M fire wrap configurations. This study recorded a description of the 3M fire wrap configurations installed in the plant, qualified available fire tests as acceptable test methods, and identified which 3M wrap configurations were bound by the qualified fire tests and technical evaluations. The test review was performed based on the fire wrap system test data used to qualify 3M fire wrap installations provided by 3M at the time of the review. The report recognized that there may be other tests and evaluations but provided conclusions based only on the tests and evaluations listed in the report.

The result of the study (Ref. 4) identified that fire tests were appropriately performed and that the majority of the 3M configurations are bound by the qualified tests. The report identified that the following as-built configurations were not bound by any of the qualified fire tests listed in the report (Ref. 4):

1. CS-195 collars used on 3-inch conduit wraps are not addressed by the tests that would otherwise bound this installation.
2. One-inch diameter conduits were not bound by reviewed tests.
3. Except for the 7'x1' and 26"x36" encapsulated cable trays, cable trays are not bound by reviewed tests or engineering evaluations.
4. Except for the 24"x18"x6" encapsulated junction box, junction boxes are not bound by reviewed tests or engineering evaluations.
5. Except for the 7'6"x4'x1'9" multiple pull box assembly, pull boxes are not bound by reviewed tests or engineering evaluations.
6. The spot welding banding techniques and riveted banding techniques used in the cable tray installations were not bound by the tests that would otherwise bound this installation.
7. The spot welding techniques used in the junction box installation were not bound by the tests that would otherwise bound this installation.
8. The cross-banding techniques and riveted banding techniques used in the pull box installations were not bound by the tests that would otherwise bound this installation.
9. Bus ducts were not bound by reviewed tests.

The report (Ref. 4) states these configurations require a detailed review with the 3M Corporation for disposition.

As per the Dresden Fire Protection Program (FPP) Self-Assessment (Ref. 3):

1. Dresden received technical evaluations back from 3M dated 4/21/98 and 4/22/98. These letters provide a technical justification for Item 1 above (collars).

2. A 3M technical justification dated 4/8/98, provided to Quad Cities Station, adequately bounds the bus ducts (Item 9), the pull boxes (Item 5) and junction boxes (Item 4).
3. ComEd's response to NRC Information Notice 95-52 (NTS Item No. 237-103-95-05200) identified the approved fire test that bounds the one-inch conduit discussed in Item 2 above.

Technical evaluations for the remaining 3M fire wrap configurations (Items 3, 6, 7 and 8) are not readily available during the FPP Self-Assessment. As a result, the Station issues PIF D1998-05739, NTS 237-251-98-03114 and NTS 237-251-98-03114A to address this issue.

3.0 Purpose

As identified in FPPSA (Ref. 3), the qualification documentation for four as-built 3M fire wrap configurations was not readily available. This report provides the technical evaluations to address this issue.

4.0 Scope

The scope of this document provides the technical qualification evaluations for four specific items where it was identified the technical basis for acceptance of the installed configurations was not previously documented. These items are:

1. Except for the 7'x 1' and 26"x 36" encapsulated cable trays, cable trays are not bound by the available tests or engineering evaluations.
2. The spot welding banding techniques and riveted banding techniques used in the cable tray tests were not bound by the reviewed tests that would otherwise bound this installation.
3. The spot welding banding techniques used in the junction box tests were not bound by the reviewed tests that would otherwise bound this installation.
4. The cross-banding techniques and riveted banding techniques used in the pull box tests were not bound by the reviewed tests that would otherwise bound this installation.

5.0 Licensing and Design Basis Commitments

As per 10CFR50.48 (b), Dresden Station is required to comply with 10CFR50, Appendix R, Section III.G. To achieve this objective, Dresden prepared the Appendix R Conformance Safe Shutdown Report (Ref. 24). The Station also developed evaluations that technically justified alternative protection methods where strict compliance with 10CFR50, Appendix R, Section III.G was not achieved.

Where necessary, these evaluations were submitted to the Commission to obtain approved exemptions from 10CFR50, Appendix R, Section III.G (Ref. 25). One of the fire protection features used to achieve compliance with 10CFR50, Appendix R, Section III.G, or meet the intent of satisfying the Commission's regulatory requirements, is 3M one-hour fire wrap.

No specific regulation or station licensing commitment was identified with regards to the specific level of documentation required to substantiate the adequacy of 3M fire wrap. However, NRC Generic Letter 86-10, Section 3.2.2 (Ref. 1) provides guidance on the subject.

6.0 References

References below that are not readily obtainable are included in Attachment B.

1. NRC Generic Letter 86-10, "Implementation of Fire Protection Requirements", dated 4/24/86.
2. NRC Generic Letter 86-10, Supplement 1, "Fire Endurance Test Acceptance Criteria for Fire Barrier Systems Used to Separate Redundant Safe Shutdown Trains Within the Same Fire Area", dated 5/27/94.
3. Dresden Fire Protection Program Self-Assessment Report 237-251-98-03100 dated 12/15/98.
4. NTSC Report 93-143, Revision 0, "Dresden and Quad Cities Stations 3M Fire Wrap System Installation and Fire Test Reviews", September 30, 1993.
5. Fax, R. Israelson (3M) to J. Steiner (ComEd), "Boundary Conditions for the 3M Interam Mat Systems", April 21, 1998.
6. 3M Quality Assurance Guideline 6350-QA-31, Interam E-54A Mat 3-Hour System, Page 31 of 37, 9/22/87.
7. Letter, R. Licht (3M) to D. Contorno (Transco) January 30, 1987.
8. 3M Installation Drawings: 6000-EJ-41 (no revision), 6000-EJ-42, R. 2, 6000-EJ-43 Issue 1 1/30/87, 6000-EJ-44 Issue 1 1/30/87, 6000-EJ-45 (no revision), 6000-EJ-59 Issue 1 5/26/87, and 6000-EJ-62 Issue 1 7/24/87.
9. Letter, R. Licht (3M) to Dave Contorno (Transco), January 15, 1987.
10. Information Relevant to Dresden Station 3M Fire Wrap Designs. Issued with NTSC Report 93-143, Rev. 0 (Reference 4).
11. S&L Memorandum of Telephone Conversation, M. Bohnert to B. Brown, January 20, 1987.
12. Letter: R. Licht (3M) to Dave Contorno (Transco), February 25, 1987.
13. Approved Vendor List, Transco Products Inc, May 15, 1987.
14. Walkdown 11/11/99, Dresden Station, D. Mershon & R. Jackson (NTSC).
15. Letter, R. Isrealson (3M) to E.D. Eenigenburg (ComEd), May 3, 1989.
16. Product Literature, "Carpenter Stainless Type 302".
17. Newnes Engineer's Reference Book, 10th Edition, 1965.
18. Welding Handbook, American Welding Society, 6th Edition, 1973.
19. Letter: J. Nosko (S&L) to J. Hausman, February 13, 1986.

20. Letter: R. Licht (3M) to Dave Contorno (Transco), April 6, 1987.
21. Product Literature, "Physical Properties of 3M E-50 Series Mats".
22. QA Audit, Dresden QAA 12-87-56, Finding 6, Audit Date 5/12 - 6/1/87.
23. Dresden Station Fire Hazards Analysis, Amendment 12, March 1999.
24. Dresden Station Safe Shutdown Analysis, Amendment 12, March 1999.
25. Dresden Station, Exemption Requests, Fire Protection Reports (FPR), Volume 4, Amendment 12, March 1999.
26. Dresden SLICE Database, 9/24/97.
27. Letter: R. Licht (3M) to Dave. Contorno (Transco), January 26, 1987.

7.0 Definitions

Encapsulation: The fire barrier assembly protecting the essential circuits. Dimensions provided for the fire barrier assemblies, or encapsulations, are given as internal dimensions.

Wrap: Refers to the installed 3M Interam E-50A and E-54A fire barrier assemblies at Dresden Station (Ref. 27).

8.0 Evaluation Methodology and Results

ComEd Nuclear Operations Division Standard NES-MS-05-3, "GL 86-10 Evaluation Standard" Revision 0 was used as a guideline in preparation of this report, this included the recommended formatting.

8.1 Description

As a result of the 1998 Fire Protection Program (FPP) Self-Assessment (Ref. 3), four 3M-wrap configurations were identified that do not have readily available technical justifications. The Self-Assessment recommended that technical justifications be developed for each configuration in accordance with Generic Letter 86-10 (Ref. 1). The following discussion provides evaluations for the four configurations.

8.1.1 Evaluation of cable tray enclosures

Dresden Station has five 3M fire wrap cable tray encapsulations. These vary in sizes from 30"x 6" to 7'x 1'4". The table below outlines the various tray configurations. Note that tray configurations 1 and 2 are cable trays that are encapsulated within a larger assembly.

Dresden has wrapped cable tray assemblies of the following sizes: 30"x 6", 7'x 1', 7'x 1'4", 33"x 34" and 26"x 36". These assemblies consist of one to

three cable trays encapsulated within the assembly. The 7'x 1' and 26"x 36" encapsulated trays have been previously bounded.

Evaluation of Cable Tray Enclosures

Item	Encapsulation Size	Location	Configuration	Bounded
1	3'6" x 1'	N/A	Single	N/A, tray inside Item 4
2	3'6" x 1'4"	N/A	Single	N/A, tray inside Item 5
3	30" x 6"	U3 TB corridor 517'6"	Single	See evaluation below
4	7' x 1'	U2 TB Trackway 517'6"	Multiple	Yes, previously justified
5	7' x 1'4"	U2 TB Trackway 534'	Multiple	See evaluation below
6	33" x 34"	U3 TB corridor 517'6"	Multiple	See evaluation below
7	26" x 36"	U3 TB corridor 517'6"	Multiple	Yes, previously justified

Item 1: 3'6" x 1' cable tray is the single vertical cable tray type encapsulated within the 7' x 1' encapsulation. No justifications are required for this individual tray; see Item 4 for overall encapsulation justification.

Item 2: 3'6" x 1'4" cable tray is the single vertical cable tray type encapsulated in the 7' x 1'4" encapsulation. No justifications are required for this individual tray; see Item 5 for overall encapsulation justification.

Item 3: A single 30"x 6" cable tray is wrapped from U3 TB Corridor location H44 to the corridor at G44, Elevation 517'-6".

SWRI Test Report 01-7912a[1] (included with Ref. 4) dated 6/85, tested two 24"x 4" ladder back cable trays, one with a single layer of cable fill and one with 40% cable fill. The test was conducted to meet the requirements of the ANI/MAERP "Standard Fire Endurance Test Method to Qualify a Protective Envelope for Class 1E Electrical Circuits". Although the test was not explicitly run to the G.L. 86-10, Supp. 1 criteria for fire barrier rating, this one-hour test performed to the requirements.

Fax transmittal from Ron Israelson (3M) to Jack Steiner (ComEd) on 4/21/98, "Boundary Conditions for the 3M Interam Mat System" (Ref. 5), resolves that smaller items bound larger items from a thermal point of view. "Due to the smaller thermal mass of small items, large items heat up slower when exposed to the same rate of heat input. Therefore, systems which pass test conditions with small items are valid for installations which involve larger items." Based on this justification provided by 3M, smaller

commodities bound larger commodities as long as the mass within the larger encapsulation is greater than that of the smaller commodity.

Both the tested cable tray and the installed cable tray encapsulations have 4 layers of E-50A mat installed, therefore the similar configuration will bound the installed based on comparable encapsulation. The tested 24"x 4" ladder back cable tray with a single layer of cable fill contains less mass than the installed 30"x 6" ladder back cable tray (Tray # 735B, [Ref. 4]) with a 67% cable fill (Ref. 26), therefore this provides the bounding justification.

Item 4: Two 3'6" x 1' vertical cable tray risers are wrapped together in a 7' x 1' encapsulation in U2 TB Trackway Elevation 517'-6".

Justification was previously provided by 3M Drawing 6000-EJ-41 (Ref 8) & 3M letter dated 1/15/87 (Ref 9). The justification focused on the wrap application on the vertical cable tray with an obstruction of another cable tray. The detail was not explicitly clear on the acceptability of the double cable tray encapsulation. The encapsulation is similar to the pull box configuration approved by 3M (Ref. 15) and the enclosed trays are similar to those in both Item 3 and Item 6. The two adjacent installed 3'6"x 12" solid steel risers with cable fill have a greater mass than the single tested 24"x 4" ladder back cable tray in Item 3. Based on the "smaller mass bounds larger mass" thermal justification provided in Item 3, the configuration is thermally bounded.

Item 5: Two 3'6"x 1'4" vertical cable tray risers wrapped together in a 7' x 1'4" encapsulation in U2 TB Trackway Elevation 534'-0".

Based on the justification provided in Item 3, the approved smaller configuration in Item 4 (7'x 1' assembly) provides bounding justification for the larger 7'x 1'4" encapsulation.

Item 6: At G44, three 30"x 6" trays are encapsulated for overall configuration size of 33"x 34".

Based on the justification provided in Item 3, the approved smaller configuration in Item 7 (26"x 36" cable tray assembly) provides bounding justification for the larger 33"x 34" cable tray encapsulation.

Item 7: Two 30"x 6" cable trays are encapsulated in a 26"x 36" encapsulation for the length of the corridor from locations G44 to G48. From location G44 to G46, the assembly is a four-sided 3M encapsulation. From location G46 to G48, the cable trays are enclosed on 2 sides with 3M mat material, and the adjacent ceiling and wall enclose the other two sides.

Justification previously provided by 3M Drawings 6000-EJ-42, 6000-EJ-45, 6000-EJ-59, 6000-EJ-62, (Ref. 8) S&L memo 1/20/87 (Ref. 11) and 3M letter 2/25/87 (Ref. 12). The referenced 3M drawings provide details of a tray encapsulation assembly for two 30"x 6" cable trays installed in a wall/ceiling interface. Based on these engineering judgements provided by 3M, this configuration is acceptable.

8.1.2 Evaluation of banding deviations

Banding is required to ensure the wrap will remain in position during and post fire scenarios. Foil tape is used to secure the wrap in position. This tape is the primary means of securing the wrap when it is in the normal, non-fire state. During a fire, the tape has the possibility of burning off; thereby the wrap may not have a means to stay in position and needs a manner of restraint. Steel banding, carbon or stainless, is then installed to restraint the wrap in the event that the tape will not provide the required fastening capabilities. One-half inch (1/2") steel banding is required per 3M Quality Assurance documentation (Ref. 6). 3M letter to Transco on January 30, 1987 (Ref. 7) outlined that 5/8" banding was to be used at Dresden for cable trays. Consequently, Dresden Station installed 5/8" stainless steel banding at the required intervals per 3M provided guidance in all applications. 300 series stainless steel banding is called out on the 3M Quality Assurance documentation (Ref. 6), although the exact alloy of the stainless steel banding installed at Dresden is unknown.

Banding in most applications at Dresden was installed per the typical details, installation manual and pertinent engineering judgements. Typical installation details call for crimp type or wing type friction clips (retention clips) to be used to secure the banding. In most applications, this method of fastening was followed, although in some instances, alternative fastening techniques were used. These alternative fastening techniques include riveting of banding and spot welding of banding in order to secure the banding to the wall or ceiling. In addition, the banding was crossed during installation, which NTSC Report 93-143 (Ref. 4) noted was not bounded by the reviewed testing. Resolutions to these items are provided in the following evaluation.

8.1.2.1 Evaluation of riveting deviations

On cable trays and pull boxes in the U2 Turbine Trackway area, riveting has been used to secure the banding to a CS-195 collar material. The collar is then securely mounted to the concrete wall using concrete anchors.

Riveting is an acceptable alternative to the use of the friction clips because of the nature of the fastening technique and is similar to acceptable design applications. It is known that 1/2" banding is acceptable per the design documentation, but Dresden has installed 5/8" wide banding. 3M Quality Assurance Guideline 6350-QA-31, (Ref. 6) states, "If the banding is to be anchored to concrete, a minimum of 5/8" (or larger) wide by 0.020" thick 300 series stainless steel bands must be used to accommodate a 1/4" diameter hole for the concrete anchor." Additionally, installation documentation and training provided by 3M (Ref. 10) states that punching a hole in the banding is an acceptable practice.

The rivets were secured to the CS-195 collar that was mounted to the wall and provided additional coverage for the wrap at the wall interface. The banding was riveted to the collar in a minimum of 2 positions, and in some instances there were as many as four rivets securing the banding to the collar. The rivets are therefore serving the same purpose as the concrete anchor to secure the banding in position. The cross-sectional area of the banding has been maintained as 1/2", the minimum required to typical installation, and has a greater cross-sectional area than if holes had been positioned for 1/4" concrete anchors in 5/8" banding.

The material of the rivets is as important as the securement method. Aluminum rivets would melt in a fire scenario at approximately 900°F, well below the failure point of the banding, therefore the rivets need to be of comparable material to the banding to ensure the assembly will provide the required protection. Investigation of QAA Report 12-87-56 (Ref. 22) shows that Transco suppliers at the time only supplied stainless steel rivets (Ref. 13). Additionally, field investigation determined that there were steel rivets installed.

Investigation into the riveting of the stainless steel banding to the CS-195 collar found that there were no engineering judgements on the acceptability of this configuration. Research determined the rivets to be of a steel material. The multiple rivets securing each band (minimum two, often four) are comparable to the use of one concrete anchor. Approved concrete anchors include TapCon screws, which are made of steel and the use of concrete anchors is approved to secure banding to the wall or ceiling (Ref. 8). Based on the research that the installed rivets are steel and provisions per Reference 8 allow for the banding to be secured with concrete anchors provides basis that the riveted banding is acceptable.

8.1.2.2 Evaluation of spot welding deviations

Spot welding of banding occurred on the protected junction box in the U3 Reactor Building, on the protected cable trays in the U3 corridor, and as noted in the field walkdown (Ref. 14) on the protected pull boxes and cable trays located in the Unit 2 Turbine Building Trackway.

The banding was spot welded together to form a loop that passed through a slot on steel angle clips as shown in 3M Engineering Judgement 6000-EJ-59 (Ref. 8). This allowed a steel angle clip to be secured to the concrete ceiling or wall to secure the banding in position.

Evidence of welded banding has not been noted in fire tests as part of the 3M Interam E-Mat test series. 3M who provided much of the original and recent justification for the Dresden configurations, has not responded to our requests for information regarding this particular issue.

Research was performed to determine the properties of stainless steel at ambient and elevated temperature. In addition, the strength of a spot weld was determined at ambient temperature. Using a relation that the reduction in strength of continuous banding is comparable to the reduction in strength of the spot welded banding, the expected strength of the spot weld at elevated temperatures was determined. Attachment A contains this calculation. Based on the results of the calculation and determination of the weight of the 3M Mat to be supported, the acceptance of spot welded banding can be made. Attachment A provides the calculation for the weight that a single spot weld can support and the expected weight of the 3M material.

The Reactor Building junction box has four vertical and four horizontal bands restraining the mat system. Conservatively assuming that the junction box does not support any of the weight of the encapsulation and the four horizontal bands only act to restrain the system to the wall, then the four vertical bands support all the weight of the material. Each band has four welds, two at each intersection with the angle clip. Conservatively, only one weld is assumed at each clip for a total of 8 welds. Based on the weight of 131.6 lbs of material (per Attachment A) and the weight evenly distributed over each weld, each weld is required to support 16.45 lbs. Each weld can be expected to support 19.5 lbs (78 lbs / safety factor of 4) at 1600 °F (per Attachment A). Although the calculated strength is for a temperature 100°F below the maximum at the end of a one-hour E-119 time/temperature curve, the conservatisms made in this

calculation and the features of the actual installation (multiple bands/welds; support provided by the junction box) off-set the temperature difference. In addition, the likelihood of a similar scenario to a one-hour ASTM E-119 type fire is minimal as documented by the fire protection features and Fire Hazards Analysis in Sections 8.3.2.1 and 8.4.2.1 of this report.

On the U3 Corridor cable trays, the weight supported by a single band is calculated as 25.2 lbs (per Attachment A). Conservatively assuming only one weld at each angle clip (two may be present), there are two welds per band. One weld is calculated to support 19.5 lbs (78 lbs / safety factor of 4) each at 1600° F (per Attachment A), therefore two welds supporting 25.2 lbs is more than adequate even though the given the temperature is 100° F below ASTM E-119 time/temperature limits at one-hour. Additionally, the added conservatism of a factor of safety of 4 on the strength of one weld and actually two welds versus one at each angle clip, provide further justification that the installed configuration is acceptable. In addition, the likelihood of a similar scenario to a one-hour ASTM E-119 type fire is minimal as documented by the fire protection features and Fire Hazards Analysis in Sections 8.3.1.3 and 8.4.1.3 of this report.

8.1.2.3 Evaluation of cross banding deviation

Two pull boxes located in Fire Zones 8.2.5.A and 8.2.6.A which contain essential U3 Safe Shutdown cables that run from the Unit 3 Cable Tunnel to the Control Room were found to have banding installed that was crossed-over. Drawings were submitted to 3M by ComEd of configurations for approval of a boundable design, which it was returned via a letter from 3M that the assemblies were acceptable (Ref. 15). One such approved assembly was the cable tray riser located at the 517' elevation. The detail shows the installed banding configuration is similar to that approved by 3M, therefore, providing the bounding justification.

8.2 *Safe Shutdown Equipment*

8.2.1 Turbine Building

8.2.1.1 Turbine Building U2 Trackway (8.2.5.A) El. 517'

Certain Unit 3 control cables required for safe shutdown (Path B1) are routed through the encapsulated cable risers and pull box adjacent to Fire Area TB-V. SSD equipment in this zone include 480-V MCC 29-2, CRD local start panel, service water cooling to CRD valves,

condensate storage tank level indicators, MSIV's, and HPCI Valve MO2-2301-8.

8.2.1.2 Turbine Building U2 Trackway (8.2.6.A) El. 534'

Certain Unit 3 control cables required for safe shutdown (Path B1) are routed through the encapsulated cable risers and pull box adjacent to Fire Area TB-V. SSD equipment in this zone include 480-V MCC's 28-2 and 28-3 and 4-kV Switchgear 23 and 24.

8.2.1.3 Turbine Building U3 Corridor (8.2.5.C) El. 517'

Certain Unit 3 cables required for the Isolation Condenser Safe Shutdown Path B2 is encapsulated in a 1-hour cable tray wrap along the ceiling. Safe shutdown equipment located in this zone include service water cooling to CRD pump valves

8.2.2 Reactor Building

8.2.2.1 Reactor Building (1.1.1.2) U3 El. 517'

The 2/3 Diesel Generator power and control cables for safe shutdown (Path A1) are encapsulated in a 1-hour wrap assembly that includes two conduits and a junction box. Safe shutdown equipment located in this zone includes 480-V MCC's 38-1 and 39-1, LPCI valves, CDR HCU's, and Reactor Pressure and Water Level Instrumentation.

8.3 Fire Protection Equipment

Fire protection equipment in the fire zone may consist of fire detection and/or fire suppression. If only fire detection is present, there are manual means for the fire brigade to attack a fire, in the form of hose stations and/or fire extinguishers.

8.3.1 Turbine Building

8.3.1.1 Turbine Building U2 Trackway (8.2.5.A) El. 517'

Certain Unit 3 control cables required for safe shutdown are routed through the cable risers and pull box adjacent to Fire Area TB-V and are protected with a 1-hour barrier and automatic suppression and fire detection in accordance with Appendix R Section III.G.2

requirements. A wet pipe sprinkler system protects the reactor feed pumps and Trackway and a preaction sprinkler system protects service and instrument air compressors. Ionization and wet pipe sprinkler protection is provided in the corridors.

8.3.1.2 Turbine Building U2 Trackway (8.2.6.A) El. 534'

Certain Unit 3 control cables required for safe shutdown are routed through the cable risers and pull box adjacent to Fire Area TB-V and are protected with a 1-hour barrier and automatic suppression and fire detection in accordance with Appendix R Section III.G.2 requirements. The hydrogen seal oil is protected by a water spray system. Ionization detectors actuate a preaction suppression system using closed head directional spray nozzles in the cable concentration area on the south mezzanine. Manual hose stations and fire extinguishers are also available in this zone.

8.3.1.3 Turbine Building U3 Corridor (8.2.5.C) El. 517'

Certain Unit 3 cables for paths B1 and B2 are encapsulated in a 1-hour cable tray wrap. This cable tray runs approximately 75 feet along column/row G and between column/rows 44 and 48, marking the western corridor leading to the Unit 3 Turbine Building. The corridor is constructed of reinforced concrete with cable penetrations sealed with noncombustible material, but the corridor does not carry a fire rating. Automatic detection and water suppression are utilized to prevent fire spread down the corridor.

8.3.2 Reactor Building

8.3.2.1 Reactor Building (1.1.1.2) U3 El. 517'

Fire Zone 1.1.1.2 has complete fire detection that alarms in the control room. Loading in the southeast corner is less than 2,000 BTU/ft^2 per Exemption Request Section 4.7.4, which provides justification for lack of fire suppression. Local water suppression is provided to protect the ACAD air compressors. Manual hose stations and fire extinguishers are also available in this zone.

8.4 *Fire Hazards Analysis*

8.4.1 Turbine Building

8.4.1.1 Turbine Building U2 Trackway (8.2.5.A) El. 517'

For a fire in the Eastern Zone Group (TB-I, including Fire Zone 8.2.5.A) only Unit 2 would be affected and could be shut down using isolation condenser shutdown Path B1. All equipment and cables are independent of TB-II with the exception of Unit 3 cables, which are protected with a 1-hour barrier and automatic suppression and detection.

The floor area is approximately 16,000 sq. ft with a combustible loading of approximately 57,000 BTU/ft^2. The majority of this loading is attributed to the lubricating oil for the 3 reactor feed pumps that have their own suppression system. A large contribution is also from power, control and instrumentation cabling. In addition, RWP clothing (rubber and cotton Anti-C's) is stored in this area and contribute to the combustible loading.

A walkdown performed (Ref 14) of this area observed that there are no major combustion sources located in close proximity to the fire wrap assembly. The reactor feed pumps are isolated from the fire barrier. Additionally the fire barrier encapsulated much of the cabling that contributes to the combustible load. The protected pull box and cable tray assembly in this area is protected with a wet pipe sprinkler system. There is no concern of a hot gas layer affecting the assembly as it is located adjacent to a large opening in the ceiling that opens to the turbine floor.

8.4.1.2 Turbine Building U2 Trackway (8.2.6.A) El. 534'

For a fire in the Eastern Zone Group (TB-I, including Fire Zone 8.2.6.A) only Unit 2 would be affected and could be shut down using isolation condenser shutdown Path B1. All equipment and cables are independent of TB-II with the exception of Unit 3 cables, which are protected with a 1-hour barrier and automatic suppression and detection.

The floor area is approximately 9,000 sq. ft with a combustible load of 60,000 BTU/ft^2. The majority of the loading is from power, control and instrumentation cables. Additionally, lubricating oil from

the Hydrogen Seal Oil Unit contributes to the combustible loading, but this system is isolated from the fire wrap assembly and has a suppression system protection. This assembly is located on the south mezzanine and is isolated from all other hazards. The switchgear and MCC's in this area are located more than 20' away separated by a non-rated wall and door. Additionally, the assembly is located at floor level, and a hatch open to the turbine floor above is directly adjacent, therefore there will be no hot gas layer impingement on this assembly.

8.4.1.3 Turbine Building U3 Corridor (8.2.5.C) El. 517'

For a fire in the Central Zone Group (TB-II, including Fire Zone 8.2.5.C) it is possible to shut down both units by alternative means. Unit 2 could be shut down using path A2 and Unit 3 could be shut down using Path B2. All equipment required for these paths is independent of TB-II with the exception of some Unit 3 cables that are routed through the southern part of this zone group. These cables are run in a cable tray approximately 75 feet along column/row G and between column/rows 44 and 48, marking the western corridor leading to the Unit 3 Turbine Building. These cables are protected with a 1-hour barrier and automatic suppression and detection.

The floor area is approximately 16,000 sq. ft with a combustible load of 37,600 BTU/ft^2. The majority of the loading is from power, control and instrumentation cables. In addition, lubricating oil is stored in this area, contributing to the overall combustible load, but not stored in the corridor. The lubrication oil is protected with a suppression system and the cabling running in the corridor is encapsulated with a one-hour fire barrier. Exemption Request Section 5.2 provides that the corridor in which the cables are located is equivalent to a three-hour boundary due to automatic water suppression and detection, and cables are wrapped with a one-hour barrier, which eliminates the major combustibles in the corridor.

8.4.2 Reactor Building

8.4.2.1 Reactor Building (1.1.1.2) U3 El. 517'

The floor area is approximately 9,900 sq. ft with a combustible load of 26,000 BTU/ft^2. Exemption Request Section 4.4 provides justification for the lack of complete suppression and detection. Fire Zone 1.1.1.2 does have complete detection but no suppression. The bulk of the loading is due to power, control and instrumentation

cables. The area has strictly controlled combustible limits and the area in proximity to the configuration has a combustible loading limit of 2,000 BTU/ft^2. Products of combustion in this area (smoke/hot gases) would escape to higher building elevations through a 20'x 20' equipment hatch located on the south side of the fire zone, directly in front of the fire wrap assembly.

9.0 Conclusions

9.1 Cable trays

All cable trays are bounded by fire testing or published engineering judgments from 3M.

9.2 Riveted banding

The riveted banding was determined comparable to concrete anchors, which are approved fastening mechanisms. Investigation into the riveting of the stainless steel banding to the CS-195 collar found that there were no engineering judgements on the acceptability of this configuration. Research determined the rivets to be of a steel material. The multiple rivets securing each band (minimum two, often four) are comparable to the use of one concrete anchor. Approved concrete anchors include TapCon screws, which are made of steel and the use of concrete anchors is approved to secure banding to the wall or ceiling (Ref. 8). Based on the research that the installed rivets are steel and provisions per Reference 8 allow for the banding to be secured with concrete anchors provides basis that the riveted banding is acceptable.

9.3 Welded banding

9.3.1 U3 Reactor Building Junction Box

The calculation of the weight of material on the junction box and the weight that the welds can support demonstrate the ability for the installed configuration to support the encapsulation under the postulated fire scenario. The Reactor Building junction box has four vertical and four horizontal bands restraining the mat system. Conservatively assuming that the junction box does not support any of the weight of the encapsulation and the four horizontal bands only act to restrain the system to the wall, then the four vertical bands support all the weight of the material. Each band has four welds, two at each intersection with the angle clip. Conservatively, only one weld is assumed at each clip for a total of 8 welds. Based on the weight of 131.6 lbs of material (per Attachment A) and the weight evenly distributed over each weld, each weld is required to support

16.45 lbs. Each weld can be expected to support 19.5 lbs (78 lbs/ safety factor of 4) at 1600 °F (per Attachment A). Although the calculated strength is for a temperature 100°F below the maximum at the end of a one-hour E-119 time/temperature curve, the conservatisms made in this calculation and the features of the actual installation (multiple bands/welds; support provided by the junction box) off-set the temperature difference. In addition, the Fire Hazards Analysis (Ref. 23) and Exemption Requests (Ref. 25) document there are minimal fire hazards within the immediate area of the encapsulation. Based on the calculated strength margin and limited fire hazards in the proximity of the banding, the welded banding is acceptable.

9.3.2 U3 Corridor Cable Trays

The calculation of the weight of material a band would be required to support and the weight that the welds can support demonstrate the ability for the installed configuration to support the encapsulation under the postulated fire scenario. On the U3 Corridor cable trays, the weight supported by a single band is calculated as 25.2 lbs (per Attachment A). Conservatively assuming only one weld at each angle clip (two may be present), there are two welds per band. One weld is calculated to support 19.5 lbs (78 lbs/ safety factor of 4) each at 1600° F (per Attachment A), therefore two welds supporting 25.2 lbs is more than adequate even though the given the temperature is 100° F below ASTM E-119 time/temperature limits at one-hour. Additionally, the added conservatism of a factor of safety of 4 on the strength of one weld and actually two welds versus one at each angle clip, provide further justification that the installed configuration is acceptable. In addition, there is sprinkler protection and automatic detection and no major combustibles located in the corridor. Based on the calculated strength margin and limited fire hazards in the proximity of the banding, the welded banding is acceptable.

9.3.3 U2 Turbine Trackway Cable Trays

The encapsulation at the U2 Turbine Trackway includes welded banding and riveted banding. This banding is run horizontally across the front of the cable trays and pull boxes and is used to restrain the wrap in position. The banding is installed at 8" intervals, which is more conservative than the 14" spacing used in the U3 Corridor cable trays. Based on the more conservative banding spacing and acceptability of the U3 Corridor banding, automatic suppression and detection systems directly protecting the wrap, and major

combustibles not located near the encapsulation, the riveted and welded banding is acceptable.

9.4 Cross Banding

The installed cross-banding technique is acceptable as approved by 3M engineering judgements and typical details.

9.5 Deviations

The walkdown performed to verify the previous configurations (Ref. 14) noted two additional deviations.

1) Banding on a cable tray installed on the cable tray protection in Fire Zone 8.2.5.C was riveted together. Two pieces of banding were overlapped and riveted together with two rivets. Based on the aforementioned riveting justification, this deviation is acceptable.

2) A section of banding on the pull box in the U2 Turbine Trackway 534' elevation was observed to be damaged during the walkdown. This is not acceptable, as it is less than the minimum banding width of 1/2" specified by Ref. 6. In addition, this banding is relied to secure other bands in position. The qualification of the riser enclosure on the outside of the west wall of the Control Room is contingent upon replacing this one damaged stainless steel band. Action Request # 990068541 was written to replace the damaged band.

10.0 Attachments

A. Calculation of Weld Strength and Fire Wrap Weight
B. Selected References

Attachment A: Calculation of Weld Strength and Fire Wrap Weight

Known:

- Tensile Strength of 302 Stainless Steel at 70 deg F = 85,000 psi (Ref. 16)
  [The banding installed at Dresden station is unknown, therefore it is assumed to be 302 stainless steel for this calculation. Other series stainless steels have tensile strengths in the range of 85,000 to 95,000 psi, therefore a conservative assumption of using 302 stainless steel with a tensile strength of 85,000 psi was made. (Ref. 18)]
- Tensile Strength of 302 Stainless Steel at 1600 deg F = 18,000 psi (Ref. 16)
- Shear Strength of Stainless Steel (type unknown) at ambient = 70,000 psi (Ref. 17)

Methodology and Calculation

Stainless steel is a homogeneous metal, therefore a similar reduction in shear strength can be expected in direct proportion with tensile strength at elevated temperatures.

	Tensile		Shear
Ambient (70°F)	85,000	=	70,000
1600°F	18,000		X

X= 14,824 psi (shear strength stainless steel at 1600 deg F)

For spot welding stainless steel with thickness of 0.021 inches, the minimum shear strength for stainless steel with a tensile strength of 70,000 to 90,000 psi is 370 lbs. The diameter of the fused zone is 0.100 inch. (Ref. 18) The area of the weld is $\pi R^2 = 7.85$ E-03 in^2. Therefore the shear strength of a spot weld at ambient is 370 lbs / 7.85E-03 in^2 = 47,134 psi.

Due to the homogeneous nature of stainless steel and that resistance spot welding does not use filler material, but fuses the metal through application of electrical current, the weld is comparable to a continuous piece of metal. Therefore the reduction in shear strength of a continuous strip of stainless steel is expected to be proportional to that of a welded strip of stainless steel.

	Shear Cont.		Shear Welded
Ambient (70°F)	70,000	=	47,134
1600°F	14,824		X

X = 9,982 psi (shear strength of a spot weld at 1600 deg F)

To determine if this strength is enough to support a 3M E-50 Series 1-hour encapsulation, the amount of weight each weld can support and the weight of the 3M material used must be determined.

To determine the weight that a weld can support, the cross-sectional area and shear strength is used. The weld cross-sectional area is 7.85 E-03 in^2 and the shear strength of a spot weld at 1600 deg F is 9,982 psi, therefore each weld can support 78 lbs (9982 psi X 0.00785 in^2). An additional safety factor of 4 is added for additional conservatism to account for any possible unknowns pertaining to the materialistic behavior of the steel and welds at elevated temperatures, therefore each weld can be expected to support 19.5 lbs (78 lbs / safety factor of 4).

The weight of one layer of E-50A mat is 0.94 lb/ft^2 and one layer of E-54A mat weighs 2.1 lbs/ft^2 per 3M Product Literature (Ref. 21) and telecon with 3M Representatives. E-54A Mat is manufactured with materials identical to E-50A Mat. The differences between the materials are the color and thickness. E-54A Mat is approximately 0.4" thick and blue in color, where E-50A is approximately 0.2" thick and gray in color. One layer of E-54A is equivalent to two layers of E-50A (Ref. 27).

For the Reactor Building junction box application, 4 layers of E-50A Mat are required for one hour protection, therefore the one-hour assembly weighs 3.76 lb/ft^2. Approximately 35 sq. ft. of material was required for the junction box (Ref. 19); therefore the weight of the material on the junction box is 131.6 lbs. This conservatively assumed that the assembly is composed of four one-ply layers at 35 sq. ft per layer. In actuality, there may only be a total of 35 sq. ft of material required to construct the entire 4-layer assembly with a weight of 32.9 lbs. Therefore it was conservatively assumed that the system used 35 ft^2/layer at 4 layers for a total of 131.6 lbs of material.

For the cable tray protection in the U3 Corridor, banding was installed at 8" intervals. The area is known to have many interferences and the trays are located in a crowded area at the ceiling. Therefore, the distance may be as great as 14" as long as the overall average of band spacing is maintained at 12" for a distance of 4 ft. (Ref. 20). Therefore, for conservatism a maximum spacing of 14" will be used on the cable tray evaluation. These cable trays where welding was observed are installed per detail 6000-EJ-42 (Ref. 8), where the cable tray was wrapped on two sides with the other two sides being the ceiling and wall. Therefore the banding must support the full weight of the encapsulation over a 14" span (7 inches each side of the band before the other band will pick up the weight). 2 layers of E-54A mat are specified in this configuration. The approximate size of the encapsulation in the corridor is 26"x 36". Therefore the amount of E-54A mat installed is a 26"x14" section plus a 36"x14" section is 2.5 ft^2 + 3.5 ft^2 that equals approximately 6 sq. ft of mat per layer for a total of 12 sq. ft of E-54A material per band for a total of 25.2 lbs of material.

Attachment B: Selected References

- Fax: Ron Israelson to Jack Steiner, RE: Boundary Conditions for the 3M Interam Mat System, April 21, 1998 (2 pages)
- 3M Quality Assurance Guideline, 6350-QA-31, 9/22/87, Page 31 of 37, Section G.1.a and G.1.f (1 page)
- Letter, R. Licht to Dave Contorno, January 30, 1987. (3 pages)
- Letter: R. Licht to D. Contorno, January 15, 1987. (1 page)
- S&L Memorandum of Telephone Conversation, M. Bohnert to B. Brown, January 20, 1987. (1 page)
- Letter: R. Licht (3M) to Dave Contorno (Transco), February 25, 1987. (1 page)
- Transco Products Inc, Approved Vendor List, Response to Audit #12-87-56, May 15, 1987 (5 pages)
- Walkdown Report, November 11, 1999 (3 pages)
- Letter: R. Israelson to E.D. Eenigenburg, May 3, 1989. Attached w/ letter is Letter E.D. Eenigenburg to R. Israelson, April 14, 1989. (5 pages)
- Carpenter Stainless Steel Type 302, Product Literature (2 pages)
- "Relation Between Temperature and Tensile Strength of Iron and Steel Lb. Per Sq. In. at Varying Temperatures", Newnes Engineer's Reference Handbook. (1 page)
- Table 3, "Representative Properties of Wrought Austenitic Chromium-Nickel Steels in Sheet Form", Welding Handbook, American Welding Society. (1 pages)
- Table 2, "Recommended Practices for Spot-Welding Stainless Steels", Welding Handbook, American Welding Society. (1 page)
- Letter: J. Nosko to J. Hausman, February 13, 1986, in particular Attachment A. (4 pages)
- Letter: R. Licht to Dave Contorno, April 6, 1987. (1 page)
- Product Literature, " Physical Properties of 3M E-50 Series Mats". (1 page)
- Letter: R. Licht to D. Contorno, January 26, 1987. (1 page)

3M

fax transmittal

To: Jack Steiner **Fax:** 309-654-2241 x4155

From: Ron Israelson - 3M **Fax:** 1(612)737-0250

Date: April 21, 1998

Re: Boundary Conditions for the 3M Interam Mat Systems

Pages: 2

Jack, attached is some information that I have used in the past to clarify the boundary conditions of 3M Interam E-50 Series Mat Fire Protection Systems. I hope this addresses your questions. Please let me know if you need additional clarification.

Regards,

Ron Israelson

Ron Israelson
3M Technical Service

Extrapolations used to determine Boundary Conditions for 3M Drawings

Small Items (thermal point of view) - Due to the small thermal mass of small items, large items heat up slower when exposed to the same rate of heat input. Therefore, systems which pass test conditions with small items are valid for installations which involve larger items.

- For example, test results involving small conduits would be valid for large conduits. Evidence for this is due to the fact that fewer layers of mat are required to achieve the same fire rating as small diameter conduits.
- Also, test results for floor or wall terminations on a conduit will be valid for floor or wall terminations on a cable tray. Evidence for this is due to the fact that fewer layers of mat are required on cable trays to achieve the same fire rating as small diameter conduits.

Small Items (structural point of view) - With rigid board systems, large items can present a greater opportunity for failure. If a board material is installed while using the rigidity of that board for structural reasons, seams can open in a fire event if the board material loses structural strength in the fire. With the 3M systems however, this is not a valid concern. The 3M mats are installed while in a flexible condition. The installation mechanically fixes the mats in place by compressing it around conduits, etc., or by using concrete anchors. Since the mat is not installed to perform a structural function there is no need to be concerned about a loss of structural strength during exposure to heat. Additionally, several layers are applied individually so that each layer is offset from the surrounding layers.

Large supports with partial protection - Since larger thermal masses can transfer more heat than small thermal masses, large supports will transmit more heat into a critical raceway than a small support. Therefore, systems which pass test conditions with partially protected large supports are valid for installations which involve partially protected smaller supports.

- With this in mind, test results involving partially wrapped supports transmitting heat into a conduit will be valid for partially wrapped supports into a cable tray.

Aluminum vs. steel - Due to the larger thermal mass of steel, aluminum trays and conduits will heat up faster than steel counterparts when exposed to the same conditions. Therefore, aluminum items tested are valid for steel items of the same size.

No collars - Adding collars or overlaps on the outermost layer increases the amount of fire protection. Therefore, systems which pass test conditions without collars or overlaps are valid for installations which include them.

12" Band Spacing - Closer band spacing results in the system being less likely to open up during a fire event. Therefore, systems which pass test conditions with 12" band spacing are valid for installations which use closer band spacing.

G. RESTRAINING REQUIREMENTS

1. Stainless Steel Banding Restraining System

a. 1/2"-wide minimum x .20" thick minimuim 300-Series stainless steel banding must be applied after the last layer of the system. Either crimp-type seals or fold-over, wing-type seals may be used.

b. Two bands are required for each minimum 4"-wide E-54A Mat collar put over the last mat layer seams. The centerline of the bands must be within 2" from the edge on both sides of the mat collar.

c. Bands must also be placed such that the band centerlines are within 2" from the end of all system terminations.

d. Throughout the entire system, band spacing must be 12" or less from centerline to centerline.

e. The bands must be tightened to the point where they do not move freely, but not tight enough to cut the aluminum foil.

f. If the banding is to be anchored to concrete, a minimum of 5/8" (or larger) wide x .020" thick series stainless steel bands must be used to accommodate a 1/4" diameter hole for the concrete anchor.

2. Stainless Steel Welded Wire Cloth

An alternative to stainless steel banding is welded stainless steel mesh wire cloth covering the entire system. A minimum of 2 mesh x 2 mesh (nominal 1/2" square openings) must be used with a wire diameter of .040" or larger. Concrete anchor spacing must be 8" or less.

H. REPAIR REQUIREMENTS

1. Foil Damage

Damage to foil only may be repaired by applying foil tape over damaged area.

2. Dents

Dents or impressions do not require repair.

Ceramic Materials Department/3M

3M Center
St. Paul, Minnesota 55144-1000
612/733 1110

3M

January 30, 1987

FPDCC	732
INITIAL	

Mr. Dave Contorno
Transco Products Incorporated
55 East Jackson Boulevard
Chicago, Illinois 60604-4166

Dear Mr. Contorno,

This is in regard to the Interam™ E-50A fire protection system for electrical raceways, specifically fire protection of cable trays.

3M supplied you Interam™ E-50A Mat, 1-Hour Flexible Wrap System for Electrical Raceways Installation Booklet, including Quality Assurance Guidelines and typical drawings, Issue No. 5300-86-7. This installation package requires the use of a restraining mesh as part of the restraining system for cable trays (reference 5300-ML, Issue 5, dated March 28, 1986). The restraining mesh is required for ANI accepted systems due to the method of fire qualification testing. I have reviewed our qualification program for Interam™ E-50A mat for 1-hour fire protection and found that four cable tray systems were fire tested without restraining mesh. Table I, attached, lists the results of these test programs.

Based on the results of these fire tests and the following items,

- Mat strength has been improved by the addition of a nylon scrim backing to the E-50A material.

- Current qualified E-50 Series systems do not require stainless steel mesh for restraining system.

bcc: R.D.Carlton
D.R.Coy
K.A.Jensen
R.G.Koza
A.J.Marlor
D.C.Perry
T.E.Sheehan

The requirement of the restraining mesh as described on 5300-ML and 5300-T24, Issue 6, dated March 14, 1986, will be withdrawn. The restraining system for cable trays at Dresden will be a minimum 5/8" stainless or carbon steel band at a maximum spacing of 8".

Copies of these fire tests are available from 3M upon request. If you require additional information, please contact me at 612/733-7079.

Sincerely yours,

Richard R. Licht
Product Development Supervisor

RRL:mz

Att.

cc: Marvin Bohnert - Commonwealth Edison
George Mavropoulos - SNED

TABLE I

FIRE TEST ANALYSIS

TEST REPORT	DATE	TRAY TYPE & CABLE FILL	RESTRAINING MECHANISM	TEST RESULTS
SWRI Project No. 01-7912	June, 1984	Solid back 40% fill	5/8" carbon steel bands 12" maximum spacing	Pass
		Solid back single layer	12" maximum spacing	Pass
U.L. Letter Report R10125, 82NK21937	March 5, 1985	Ladder back 40% fill	5/8" carbon steel bands 8" maximum spacing	Pass
U.L. Letter Report R10125, 82NK21937	March 4, 1985	Ladder back single layer	5/8" carbon steel bands 8" maximum spacing	Pass

Ceramic Materials Department/3M

3M Center
St. Paul, Minnesota 55144-1000
612/733 1110

January 15, 1987

3M

FPDCC	7/1
INITIAL	DMB

Mr. David Contorno
Transco Products, Inc.
55 East Jackson Boulevard
Chicago, Illinois 60604-4166

Dear Dave,

In regard to our phone conversation on January 12, 1987, the following items are addressed.

1. Lamination of E-50A mat: E-50A mat may be laminated together using 3M Super 77 Spray Adhesive or Scotch #927 Transfer Adhesive. Laminate one scrim side to foil side of second mat. The following rules must be maintained to comply to the fire rating for electrical raceways.

   a. Overlap and offset requirements as stated in the E-50A Installation Guidelines must be maintained.

   b. Total thickness of fire protection must be maintained, i.e.

      - E-50A Four layers ~ 0.8" laminated
      - E-50A Two layers ~ 0.8" thickness

2. Electrical riser with cable tray interference: 3M has developed modifications to its interference rules which will provide solutions to some of your problems. Ron Israelson, 3M Technical Service Representative, will be on site (Dresden) on January 20-21, 1987. Ron will work with you to establish procedures and rules to provide installation methods for this and other items.

I hope these solutions are instrumental in reducing these problem areas. If you require additional assistance, please contact Ron Israelson (612/635-3816) or me (612/733-7079).

Sincerely yours,

Richard R. Licht
Product Development Supervisor

RRL:mz

bcc: R. J. [illegible]
A. J. Maxlor
D. C. Perry

Memorandum of Telephone Conversation

SARGENT & LUN

Date 1/20/87 Time 7:50

Person Called: Bob Brown	Company: S&L-EPED
Person Calling: Marv Bohnert	Company: CECo- Station Construction - Dresden
Project: Dresden-2&3	Project No.: 6972-62

Subject Discussed
Fire Wrapping Cable Trays in Unit 3 Turbine Building Corridor

Summary of Discussion, Decisions and Commitments
Mr. Bohnert asked if the two-tier trays in the corridor of the Unit 3 Turbine Build are to be individually wrapped or wrapped together in one envelope. I told Mr. Bohn that the Contractor should wrap both trays in one envelope where the top tray is directly above and parallel to the bottom tray. (This should include routing points 728B/T, 729B/T and 730B/T.)

cc
G. S. Mavropoulos
R. Hunnicutt
M. Bohnert
M. Dillon
C. Ksobiech
M. E. Mowrer
D. Contorno
R. H. Jason
A. Walser
G. F. Detloff
J. F. Kelly
P. Stasiewicz

File FWF/File 6972/34

REB:bmh

Signature Electrical Engineer

3M Center
St. Paul, Minnesota 55144-1000
612/733 1110

3M

February 25, 1987

FPDCC	755
INITIAL	RRL

Mr. Dave Contorno
Transco Products Incorporated
55 East Jackson Boulevard
Chicago, IL 60604-4166

Dear Mr. Contorno:

In regard to our phone conversation on 2/20/87, the following items were clarified:

1. 3M drawing no. 6000-EJ42

   a) defining the word concrete anchor-anchor can be replaced with fastener. A typical fastener would be a tapcon™ screw or engineering equivalent with a 1/4" diameter or larger and a minimum embedment of 1.0".

   b) L angle iron can be replaced with clip angles, minimum 10 gauge stainless steel. These clip angles must be positioned to provide maximum 8" spacing for the stainless steel banding.

2. Temporary Mat Restraint - Type of adhesive and gauge of pin do not affect Fire Performance. Therefore, any style, design and adhesive may be used.

Sincerely yours,

R. R. Licht

RRL/dd
1.62

cc: Marvin Bohnert
George Mavropoulos

Response/Audit #12-87-56
Exhibit: 1
Page: 1 of 5

TRANSCO PRODUCTS INC.
EXECUTIVE OFFICES
Fifty Five East Jackson Boulevard
Chicago, Illinois 60604-4198, 312-427-2618
Telex No. 25-6154

May 15, 1987
Page 1 of 5

APPROVED VENDORS LIST

COMPANY	PRODUCTS
Alcoa Rolling Meadows, IL 60008	Aluminum Foil Sheets & Coils
Aleghany Ludium Co. Wallingford, CT 06492	St. Stl. Foils
Allmetal Screw Products Co., Inc.	St. Stl. Bolts, nuts, washers, etc.
Alpha Associates Woodbridge, NJ 07095	Fiberglass cloth
Anchor Packing Elk Grove, IL 60007	Silicone Boot Material
Atlas Bolt & Screw Co. Cleveland, OH 44110	St. Stl. (140) & (305) Sheet Metal & Self tapping screws
Bloomer-Fiske, Inc. Chicago, IL 60609	Non-Safety related fabric struct. parts
Braun Mfg. Co., Inc. Chicago, IL 60639	Stainless Steel Hinges
Breeze Corp. Saltsburg, PA 15681	Compression Clamps
Camalloy Inc. G. A. Feld Co., Div. Mt. Vernon, NY	Special St. Stl. Coils
Carborundum Company Niagara Falls, NY 14302	a. Fiberfrax bulk fiber b. Fiberfrax durablanket c. Fiberfrax hot board
Chromalloy Houston, Texas 77042	Chemical Products
Cicero Mfg. & Supply Co. Niles, IL 60648	St. Stl. pop rivets Varies Sizes

TRANSCO PRODUCTS INC.

COMPANY	PRODUCTS
Combined Metals Corp. (Formerly, Illinois Stainless Corp.) Park Ridge, IL 60068	St. Stl. Sheets, angle bars, flats, round & etc.
Commonwealth Edison Chicago, IL 60690	a. Structural Gap Seal Matl. b. Firecode CT Gypsum Cement for LaSalle (AB-4551) only
Construction Fasteners, Inc. Wyoming, Pennsylvania	St. Stl. (410) & (305) Sheet Metal & Self tapping screws
Danlee Sandblasting Co. Franklin Park, IL 60131	Special Painting
Dow Corning Corp. Midland, MI 48640	Silicone Products & Adhesives
Dynatech R/D Comp. Cambridge, MA	Thermal Testing Capabilities
Enduro Stainless Inc. (Formerly,Republic Steel) Purchased thru G. A. Feld Co., Massillion, Ohio	Special St. Stl. Coils
Fibrex (Formerly, Forty-Eights Insulation, Inc.) Aurora, IL 60507	Mineral Fiber Insulation
H. B. Fuller Company Houston, Texas 77011	Mastic/Adhesives
Galbraith Labs Knoxville, TN	Material Analysis, Tests
A. J. Gerrard DesPlaines, Il. 60018	300 Series S.S. Banding S.S. Wing Seals
Guardian Products, Inc. Pennsylvania 15136	St. Stl. (410) & (305) Sheet Metal & Self tapping screws
Hanlon Equipment Mfg. Co. Chicago, IL 60630	St. Stl. pop rivets Varies Sizes
Samuel Harris Co. Chicago, IL 60606	St. Stl. pop rivets
The House Of Stainless Inc. Chicago, IL 60632	St. Stl. Sheets, Angle Bars Rounds, Etc.

TRANSCO PRODUCTS INC.

COMPANY	PRODUCTS
ICMS Baroda, MI 49101	1. Silicone Boot Material 2. Silicone Sealants
Illinois Stainless Corp. Park Ridge, IL 60068	St. Stl. Coils, sheets, angle bars
Isomedix Inc. Whippany, NJ 07981	Radiation Testing Capabilities (Note: QA Program does not conform to 10CFR50, App. B)
Johns-Manville Denver, Colorado 80217	Ceramic Fibers
Johns-Manville Chicago, IL John J. Moroney Co.	Insulation and Marinite XL Board, Ceramic Fibers
Keene Corp. Bear, Delaware 19701	Silicone Fabrics
Master Builders Cleveland, OH 44122	Grout
Micropore Insulation LTD. Merseyside, England L491SK	Microtherm Insulation
Minnesota Mining & Manufacturing St. Paul, MN. 55144	Interam Fire Barrier Fire Protective Systems
National Metal Fabrication Elk Grove Village, IL 60007	Fabric Struct. Parts
Nielsen Hardware Corp. Hartford, CT	Hardware: latchs, catchs, strikers
Norton Company, Inc. Worcester, MA 01606	Chemical Products
Olin Corp. Somers Thin Strip Div. Waterbury, CT 06720	St. Stl. Foils
Ottawa Silica Company Ottawa, IL 61350	Silica Floor

TRANSCO PRODUCTS INC.

COMPANY	PRODUCTS
Owens-Corning Fiberglass Corp. Skokie, IL 60079	Fiberglass Insulation
Perfection Fab./Pullman Const. Chicago, IL 60628	Fabrication: Steel, Stainless Steel, etc.
Pittsburgh Corning Corp. c/o Specialty Products Insulation Co. Pittsburgh, PA 15239	Temp-Mat, and Insulations
Portland Cement Association Skokie, IL 60077	Testing Services
Power Projects LTD. Chicago, IL 60606	Engineering Design and Drafting Capabilities
Production Components Chicago, IL 60631	Breeze Clamps
Pullman Construction Ind., Inc. Chicago, IL	Fabric Struct. Framing Paints and Panel Systems
Radian Corporation Morton Grove, IL. 60053	Dow Corning Silicone Elastomers and Adhesives
Republic Steel Corp. Purchased thru G. A. Feld Co. Cleveland, OH	St. Stl. Coils
J. T. Ryerson & Son Chicago, IL 60680	St. Stl. Sheets, angle bars, flats, round & etc.
St. Joe Lead Company Pea Ridge Iron Ore Co. Clayton, MO 63105	Iron Oxide
J. H. Sessions & Co. Bristol, CT 06010	Hardware: latchs, catchs, strikers
Shakeproof Div. Elgin, IL 60120	Shakeproof Lockwashers
Sierra Fasteners Inc. Tulsa, Oklahoma	#410 Stainless Fasteners
Sommer Frey Laboratories, Inc. Milwaukee, WI 53214	Chemical Analysis and Corrosion Testing Capabilities

TRANSCO PRODUCTS INC.

COMPANY	PRODUCTS
Stainless Materials Corp. Glenview, IL 60025-0706	Stainless Steel Coils, Sheets
Tamms Industries Itasca, IL 60143	Metallic Oxide
Teledyne Rodney Metals New Bedford, MA 02742	St. Stl. Foils
Thermal Science Inc. St Louis, MO (314) 352-8422	Fire Barriers Systems Per TSI Technical Note 29684
Thorpe Products Houston, TX 77233-0407	Johns-Manville Ceramic Fiber Insulation
United States Gypsum Co. Chicago, IL 60606	a. CT Gypsum b. CT Thermafiber c. CT Accelerator d. CT Sealer e. Duracal
University of Michigan Ann Arbor, MI	Testing Services
Vansco Ind. Supply Bonfield, IL 60913	Special Duct Tape
Vimasco Corp. Nitro, WV. 25143	Fire Protective Cable Coating

R Fatt — QA APPROVAL — 5/15/87 DATE

RC Anderson — PA APPROVAL — 5/15/87 DATE

Walkdown for NTSC Project 99-40540, Dresden Fire Wrap Qualification

Dresden Station has elected to have 3M E-Mat fire barrier system installed to maintain the required electrical separation required for safe shutdown. NTSC Report No. 93-143 identified discrepancies with the documentation of the installed fire wrap. A fire protection self-assessment in 1998 again raised the concern that there are possibly unbounded installed configurations.

One remaining unresolved item is the observation made in NTSC Report 93-143 that the banding was observed to be spot welded and/or riveted. The report observed that this feature is not bounded by reviewed tests.

A preliminary walkdown was performed by D. Bosell (NTSC) and M. Dillon (ComEd), which observed no welding or riveting. Therefore the purpose of this walkdown is to verify the installation of the rivets/welds as noted by the previous report. The banding in question could have been replaced, or the informal walkdown may have missed these details.

The following outlines the areas identified by Report 93-143 where welding and/or riveting was observed. There areas will be have a 100% walkdown performed by R. Jackson (NTSC) and D. Mershon (NTSC) on Thursday November 11, 1999. The findings of the walkdown will be documented below the description of the area below.

On junction box, spot welding banding is not acceptable
On pull boxes, riveting banding is not acceptable
On cable trays, spot welding and riveting is not acceptable

Junction Box:

On JB 3RB-260, the banding is secured at the angle clips utilizing spot welding of the banding to secure it to the clip (U3 RB, against wall, approx. J-45, Dwg. F-220, Sht. 5 & 6)

Verify spot welding:
Spot welding is present on each band at the clip interface. Two spot welds are used per band. There are a total of 16 pairs of welds (4 horizontal bands & 4 vertical bands, two clips per band, 2 welds per clip). Hazards in the area are minimal; a MCC is approximately 15-20 feet from the encapsulation, no open cable trays in the area, a hatch to upper floors is located directly in front of the wrap. The area is particularly clean and void of combustibles.

Pull Box:

On pull box at elevation 517'6", banding on the pull box was riveted to CS-195 collar (U2 Turb Track, Dwg. F-220, Sht. 8)

Verify riveting:
Riveting was noted where banding was secured to the CS-195 collar. A minimum two rivets were installed, in some cases, there were four rivets securing the banding on one side to the collar. Also, noted that angle clips were used with welded banding. Apparently the pull box had been opened, and one side refastened with proper friction clips. There is sprinkler protection over the encapsulation. The encapsulation is open to the trackway with only small overhang, no immediate hazards in close proximity to the pull box assembly.

On pull box at elevation 534'6", horizontal banding was riveted to the CS-195 collar (U2 Turb Track, Dwg. F-220, Sht. 8)

Verify riveting:
All banding is riveted to the CS-195 collar with a minimum 2 rivets per band, up to maximum of four rivets were noted (either two or four rivet combinations). No hazards noted in close proximity to this encapsulation. Sprinkler protection is provided over the assembly and assembly is on the mezzanine level open to the above floors and the trackway. MCC's and other cabling located minimum 40 feet from assembly, the closest hazard is hydrogen piping approximately 10 to 15' away. A deviation was noted that circumfrential banding around the pull box was trimmed to approximately 1/4" on the bottom side of the assembly. Other banding is secured to this trimmed piece.

Cable Tray:

On 26"x 36" cable tray, the banding is secured utilizing spot welding of the banding to secure it to angle clips. These trays are encapsulated on two sides, with the ceiling and wall forming the other two sides (U3 TB, G46 to G48, Dwg. F-220, Sht. 2).

Verify spot welding:
Spot welding is verified on banding at the cable tray angle clips. The location is difficult to observe as it is at the ceiling in a congestion in the overhead. Observed a minimum one, possible two spot welds per banding at the angle clips. The assembly runs with a two sided encapsulation, the other sides being the wall and ceiling, then transitions to only one side against the wall, the use of angle clips was continuous. A deviation was noted that a band on the cable tray near G46 was riveted. It appears that the banding was spliced using two rivets to secure two pieces of banding together. This deviation was only noted in this one location.

On cable trays at 517'6" (at pull boxes), banding is riveted to CS-195 collar (U2 Turb Track, Dwg. F-220, Sht. 8)

Verify riveting:
Banding was noted to be riveted and welded on the cable tray restraints. Riveting was to the CS-195 collar with a minimum two rivets. Welds were noted on the banding tied to angle clips mounted to the wall. See 517' elevation pull box discussion for hazards, some cable trays run close to the wrap at the ceiling level of the riser assembly.

On cable trays at 534'6" (at pull boxes), banding is riveted to CS-195 collar (U2 Turb Track) (Dwg. F-220, Sht. 8)

Verify riveting:
All banding on cable trays at this location were observed to be riveted to the CS-195 collar with minimum 2 rivets and in some cases four rivets. See 534' elevation pull box discussion for hazards.

Additional Comments:
Two deviations were noted and described in the particular area of occurrence discussions. In general, the areas near the wrap assemblies were clear with no observable hazards in immediate close proximity to the wrap with the exception of some cable trays near the 517' cable tray riser.

Walkdown performed by (name/date):
Robert Jackson 11/11/99

Walkdown performed by (name/date):

3M Ceramic Materials

3M Center
St. Paul, Minnesota 55144-1000
612/733 1110

3M

May 3, 1989

Mr. E.D. Eenigenburg
Station Manager
Dresden Nuclear Power Station
RR #1
Morris, Ill. 60450

Dear Mr. Eenigenburg,

I would like you know that I received your letter dated April 14, 1989. I am familiar with the installations that are detailed on the drawings labelled "Cable Tray Risers R379 and R380", "Junction Box 3CB-9", and "Panel 2223-109". Although I cannot verify that the installations were performed to meet the drawings, I can state that the drawings represent suitable applications of the 3M Fire Protection requirements. Assuming that the installations were performed as described on the drawings, each installation represents a full 1 hour of fire protection.

Please call me at (612)736-3816 if you need any additonial assistance.

Sincerely,

Ron Israelson

Ronald J. Israelson
3M Technical Service

FPDCC	A-1056
INITIAL	

cc: Eric Skowron - Technical Staff Fire Protection Systems Engineer

Commonwealth Edison
Dresden Nuclear Power Station
R.R. #1
Morris, Illinois 60450
Telephone 815/942-2920

April 14, 1989

EDE LTR: #89-311

FRDC A-423
INITIAL RJJ

Mr. Ronald J. Israelson
3M Ceramic Materials Department
Building 207-1SC-12, 3M Center
St. Paul, MN 55144-1000

Subject: Review of Installed E-50 Fire Wrap Removable Covers

Dear Mr. Israelson:

As part of the E-50 fire wrap systems installed at Dresden Station during 1987, several configurations were installed that did not follow a standard 3M detail. Deviations from details are permitted as according to 3M drawing 5300-QA, provided that critical design requirements are met. Several of the deviations included installation of removable covers on electrical junction boxes and pull boxes (see attachments). During the installation process, 3M representatives assisted the installers in proper installation procedures and techniques, though few standard detail drawings were formally prepared. The Nuclear Regulatory Commission (NRC), during a review of Dresden Station's 3M fire wrap installations, questioned the practice of installing non-standard designs without the development of special "site-specific" details. The NRC requested that CECo have the installed designs reviewed by 3M Corporation to ensure adherence to E-50 fire wrap system requirements. The attachments list the standard details which are believed to have been followed during the design and installation of the removable covers.

During a 3M E-50 system training session held at Dresden Station on January 25, 1989, you were questioned by the Technical Staff Fire Protection System Engineer regarding the installed configuration of removable fire wrap covers at Dresden Station. At that time, you indicated that the design appeared to meet E-50 fire wrap system critical design requirements.

Dresden Station is requesting 3M Corporation to review the as-built sketches for compliance to E-50 fire wrap system requirements. The Station understands that 3M will provide technical support for it's E-50 fire wrap product at no additional cost to the purchaser. If you require additional design information, please contact Eric Skowron, Technical Staff Fire Protection System Engineer at extension 2353.

E.D. Eenigenburg
Station Manager
Dresden Nuclear Power Station

EDE:EJS:jmt
Attachments
cc: M. Strait
R. Whalen
M. Dillon
E. Skowron
File/T.S. File (4100)
File/Misc
File/Numerical
3427a

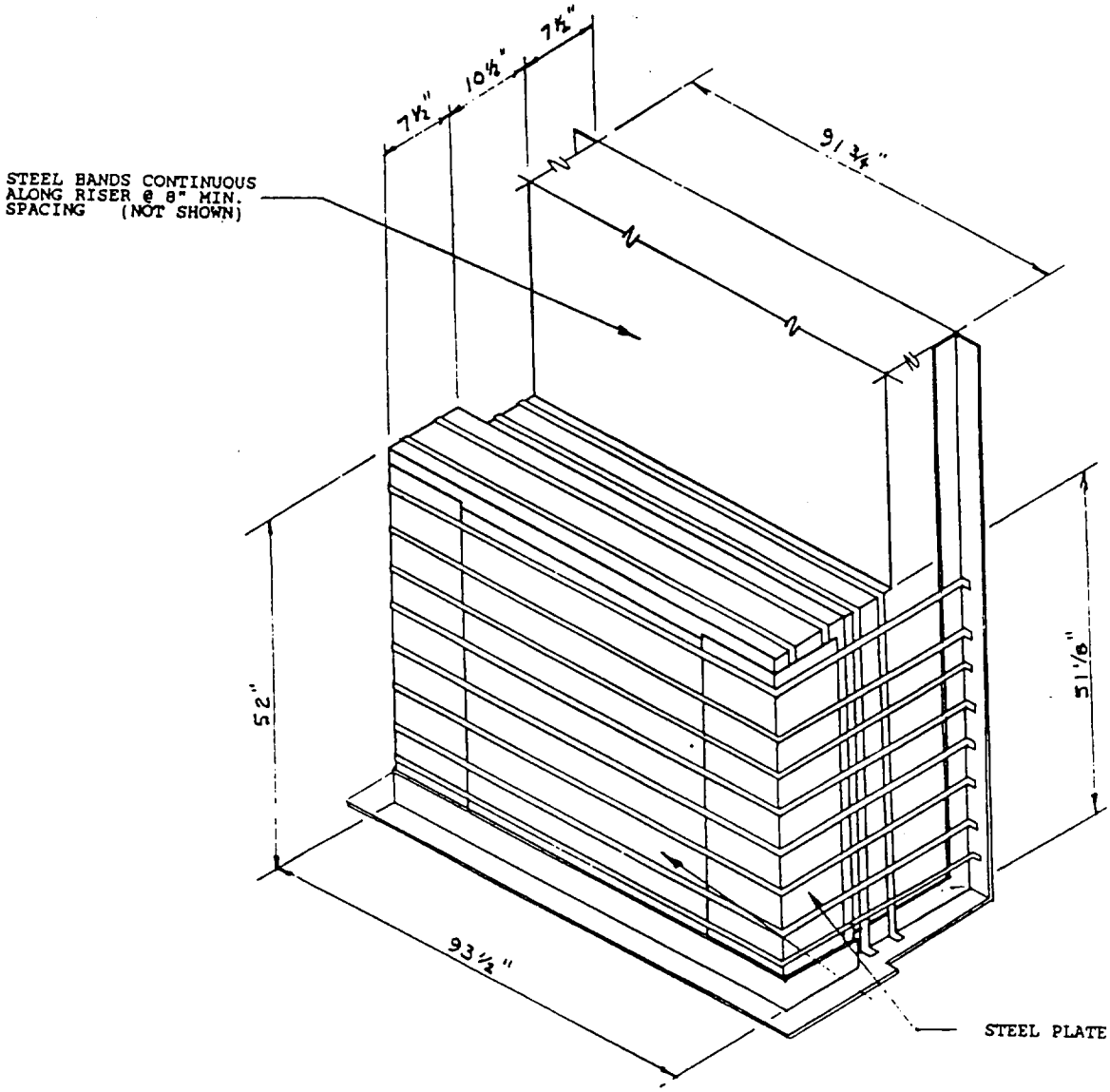

5300-J6 E-50A LAYER REQUIREMENTS
E-50A 7 CS-195 INTERFACE DETAIL TO WALL
5300-QA MATERIALS AND GENERAL INSTALLATION REQUIREMENTS:
(P1-8) E-50 MAT
CS-195 COMPOSITE SHEET
CP-25 CAULK
T-49 ALUMINUM TAPE
STEEL BANDING
STEEL COVER (SUBSTITUTED FOR STEEL WOVEN MESH)
6000-EJ59 STEEL BAND ANGLE BRACKET ANCHOR DETAIL
6000-EJ41 STEEL BANDING TRANSVERSESLY CONNECTED TO OTHER BANDS
6000-EJ45 OVERLAP REQUIREMENTS

CABLE TRAY RISERS R379 AND R380

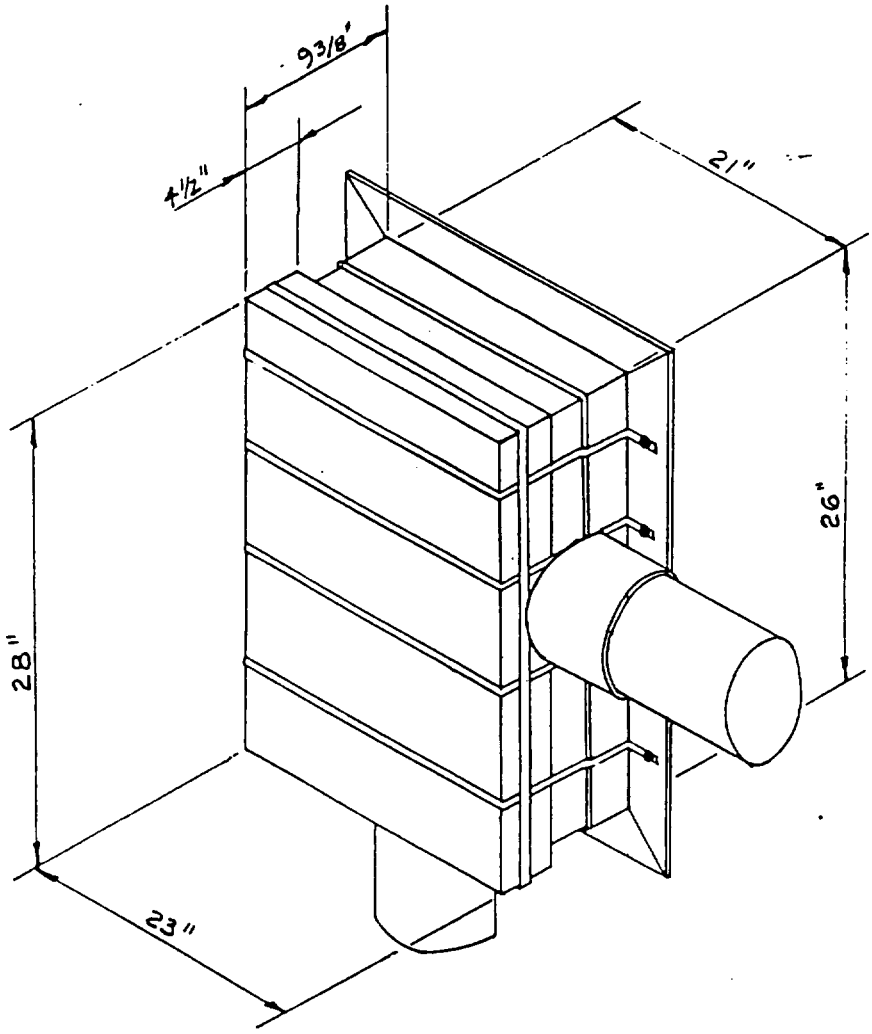

5300-J6 E-50A LAYER REQUIREMENTS
E-50A & CS-195 INTERFACE DETAIL TO WALL
5300-QA MATERIALS AND GENERAL INSTALLATION REQUIREMENTS:
(P1-8) E-50A MAT
CS-195 COMPOSITE SHEET
CP-25 CAULK
T-49 ALUMINUM TAPE
STEEL BANDING
6000-EJ41 STEEL BAND ANCHOR DETAIL
6000-EJ45 OVERLAP REQUIREMENTS

JUNCTION BOX 3CB-9

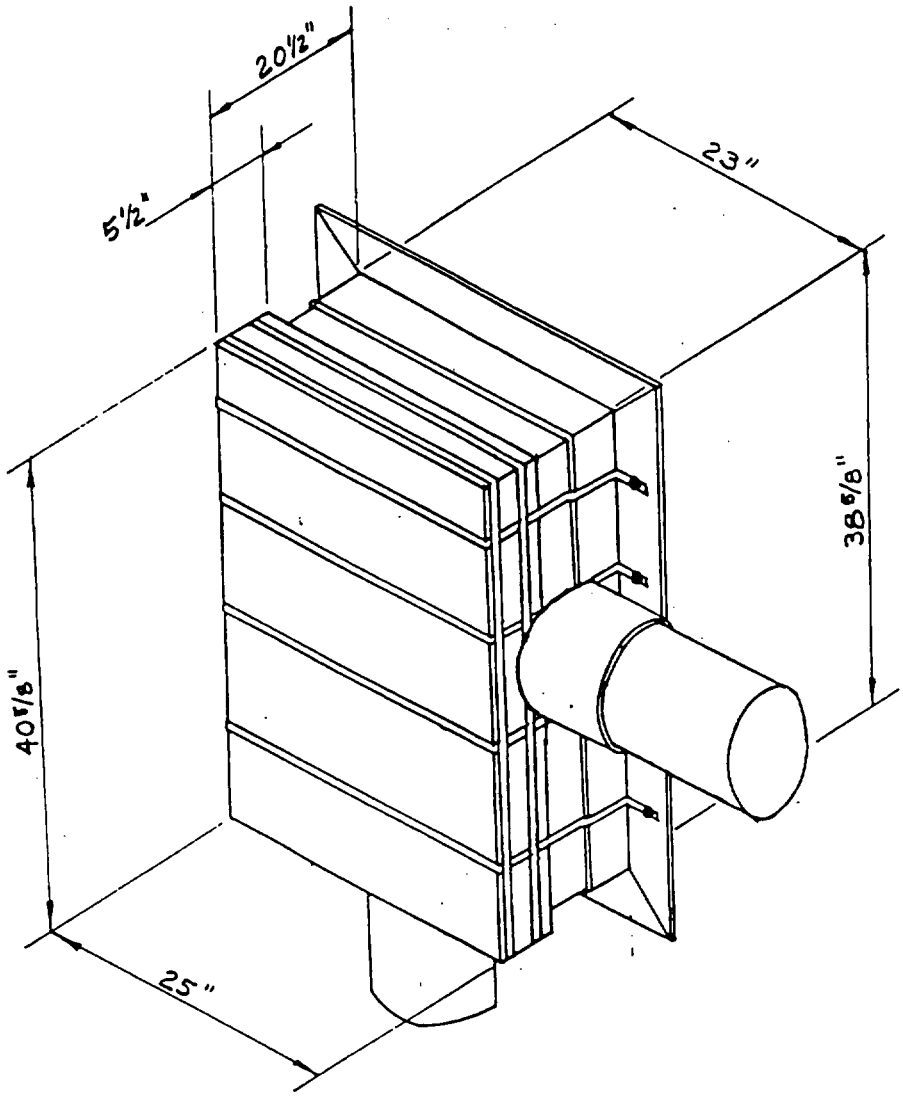

5300-J6 E-50A LAYER REQUIREMENTS
E-50A & CS-195 INTERFACE DETAIL TO WALL
5300-QA MATERIALS AND GENERAL INSTALLATION REQUIREMENTS:
(P1-8) E-50A MAT
CS-195 COMPOSITE SHEET
CP-25 CAULK
T-49 ALUMINUM TAPE
STEEL BANDING
6000-EJ41 STEEL BAND ANCHOR DETAIL
6000-EJ45 OVERLAP REQUIREMENTS

PANEL 2223-109

CARPENTER STAINLESS TYPE 302

(S30200)

Type analysis:

Carbon	0.15% max
Manganese	2.00% max
Phosphorus	0.045% max
Sulfur	0.03% max
Silicon	1.00% max
Chromium	17.00/19.00%
Nickel	8.00/10.00%

DESCRIPTION:

Carpenter Stainless Type 302, once the most widely used grade, is a slightly higher carbon version of Type 304 and is most frequently used for wire applications. In the annealed condition it is austenitic, nonmagnetic, extremely tough and ductile, and has excellent corrosion resistance.

Some typical applications are springs, stampings, moldings, woven screens, cables, etc. Specific uses are salt water fishing tackle, nitric acid vessels, dairy equipment, ice cream molds, camera parts, thermometers, and aerosol springs.

It is frequently used in the annealed condition for its nonmagnetic properties, which are of vital importance to certain instruments.

CORROSION RESISTANCE:

In its annealed condition, Carpenter Stainless Type 302 will not only withstand all ordinary rusting, but is resistant to all foodstuffs, sterilizing solutions, most of the organic chemicals and dyestuffs, and a wide variety of inorganic chemicals. It has good resistance to many acidic environments, especially nitric acid, but it does have poor resistance to halogen acids.

Steels of this analysis are all subject to "intergranular corrosion" under certain circumstances. The fully annealed steel is free from this weakness—but if, in fabrication or use, the alloy must be heated within the range of 800/1650°F (427/899°C), or cooled slowly through this range after heating to a higher temperature, the carbides in the steel tend to accumulate at the grain boundaries, and form continuous paths for corrosion. When such heating must be done, it should be followed by a corrective anneal.

For best results, the surfaces must be entirely free of scale and foreign particles. After parts are finished they should be passivated for 30 minutes in a solution of 20% by volume nitric acid at 120/140°F (49/60°C). Rinse thoroughly in water.

SCALING:

Carpenter Stainless Type 302 has excellent scale resistance up 1600°F (871°C).

PHYSICAL CONSTANTS:

Specific gravity	7.9
Density	
lb/in³	0.29
Specific heat	
Btu/lb °F (32/212°F)	0.12
kJ/kg·K (0/100°C)	0.50
Electrical resistivity at room temperature	
ohm-cir mil/ft	433
microhm-mm	720
Mean coefficient of thermal expansion	
10^{-6}/°F (32/1200°F)	10.4
10^{-6}/°C (0/649°C)	18.7

HEAT TREATMENT:

Annealing: Heat to 1850/2050°F (1010/1121°C) and quench in water. Brinell hardness approximately 150.

Hardening: Can be hardened only by cold working.

WORKABILITY:

Hot Working: Carpenter Stainless Type 302 can be readily forged, hot headed, riveted and upset. Because of its high red-hardness, more power for a given reduction is required than with mild steel. Heat uniformly to 2100/2300°F (1149/1260°C). Do not forge below 1700°F (927°C). Forgings can be air cooled without danger of cracking. For full corrosion resistance, forgings must be annealed by heating to at least 1900°F (1038°C) and water quenching. If pieces are allowed to cool slowly, there is likely to be some carbide precipitation, which will result in intergranular corrosion.

Cold Working: Carpenter Stainless Type 302 is readily fabricated by cold working. It is extremely tough and ductile and responds well to deep drawing, bending, forming and upsetting. After cold working, it is slightly magnetic. The tensile strength and hardness of Carpenter Stainless Type 302 can be significantly increased by cold working.

Machining: Carpenter Stainless Type 302 produces a long gummy chip, and chip curlers and breakers are important on the

tools. Since it work hardens very rapidly, glazing can be prevented by keeping the tools cutting—increasing the feed and slowing the speed will also be helpful. In turning operations, speeds of 70/80 sfm (0.36/0.41 m/s) are suggested. It machines quite similar to copper-nickel alloys, except that Carpenter Stainless Type 302 work hardens. The machinability can be somewhat improved by using moderately cold drawn bars.

Welding: Carpenter Stainless Type 302 can be satisfactorily brazed and welded by all methods. The weld does not air-harden and is very tough. When weld rods are used, they should be AWS E/ER 308. Due to carbide precipitation in the grain boundaries, welding may cause the problem of intergranular corrosion. When corrosive conditions are severe, the weldment should receive a post weld heat treatment to solution the intergranular carbide precipitation. A typical heat treatment would be 1900°F (1038°C) for one hour per inch of thickness and quench rapidly. Water quench if possible.

FORMS AVAILABLE:

Forgings and tube billets
Hot rolled bars
Cold drawn and ground bars
Wire and wire rods
Strip
Tubular products

TYPICAL MECHANICAL PROPERTIES:

Tensile Tests in 1" (25.4 mm) Round Section—as Annealed from 1900°F (1038°C)

Carpenter Stainless Type 302 As annealed		Yield Strength 0.2% Offset		Tensile Strength		% Elongation in 2" (50.8 mm)	% Reduction of Area	Brinell Hardness	Izod Impact	
°F	°C	ksi	MPa	ksi	MPa				ft-lb	J
1900	1038	35	241	85	586	60	70	160	110	149

Strength at Elevated Temperatures
Starting in the Annealed Condition

Test Temperature		Short-Time Tensile Tests						Creep Tests	
		Yield Strength 0.2% Offset		Tensile Strength		% Elongation in 2" (50.8 mm)	% Reduction of Area	1% Creep in 10,000 Hours	
°F	°C	ksi	MPa	ksi	MPa			ksi	MPa
70	21.1	35	241	85	586	60	70	—	—
800	427.0	21	145	61	421	37	66	—	—
1000	538.0	19	131	55	379	36	69	17	117
1200	649.0	17	117	45	310	32	66	7	48
1400	760.0	14	97	30	207	33	55	2	14
1600	871.0	10	69	18	124	40	52	—	—

Carpenter Stainless Type 302 is an excellent material to use for subzero temperatures. It loses no appreciable toughness at temperatures as low as -320°F (-196°C) and increases in strength, thus making it well suited for cryogenic applications.

Table 3—Representative Properties of Wrought Austenitic Chromium-Nickel Steels in Sheet Form[a]

Alloy	17-7	18-8			23-12	25-20	18-8 Mo	18-8 Ti	18-8 Cb
AISI Type	301	302		304	309	310	316	321	347
Condition	Cold-rolled, ½ hard temper	Annealed	Annealed	Annealed	Annealed	Annealed	Annealed	Annealed	Annealed
Physical Properties									
Density, lb. per cu. in.	0.29	0.29	0.29	0.29	0.29	0.29	0.29	[illegible]	[illegible]
Magnetism	Magnetic	Non-magnetic	Non-magnetic	Non-magnetic	Non-magnetic	Non-magnetic	Non-magnetic	Non-magnetic	Non-magnetic
Specific electrical resistance at room temp., microhms/cm./sq. cm.	77	72	72	78	78	74	74	72	73
Specific heat, Btu./lb./°F., 32-212°F.	0.12	0.12	0.12	0.12	0.12	0.12	0.12	0.12	0.12
Thermal conductivity, Btu./hr./sq. ft./°F./ft. 212°F.	8.7	9.4	9.4	8.0	8.0	9.4	9.3	9.3	9.3
932°F.	11.5	12.4	12.4	10.8	10.8	12.4	12.8	12.8	12.8
Mean coefficient of thermal expansion per °F. 32-212°F.	9.4×10^{-6}	9.6×10^{-6}	9.6×10^{-6}	8.3×10^{-6}	8.0×10^{-6}	8.9×10^{-6}	[illegible]	[illegible]	[illegible]
32-1200°F.	10.4×10^{-6}	10.4×10^{-6}	10.4×10^{-6}	10.0×10^{-6}	9.7×10^{-6}	10.3×10^{-6}	[illegible]	[illegible]	[illegible]
Melting point range, °F.	2550-2590	2550-2590	2550-2650	2550-2650	2550-2650	2300-2550	2550-2600	2550-2600	2550-2600
Mechanical Properties (At normal temp. except as stated)									
Hardness—Rockwell No.	C32	B85	B80	B85	B85	B85	B85	B80	B85
Tensile strength, psi.	150,000 min.	90,000	85,000	90,000	95,000	95,000	90,000	90,000	90,000
Yield strength (0.2% offset), psi.	110,000 min.	40,000	35,000	45,000	45,000	45,000	40,000	35,000	40,000
Elongation in 2 in., %	15-18 min.	50	55	45	45	45	50	50	45
Endurance limit (fatigue), psi.	.....	.....	35,000	.....	.....	.....	30,000	.....	.....
Stress for creep rate of 1% per 10,000 hr., psi. 1000°F.	.....	17,000	17,000	15,000	17,000	17,000	25,000	15,000	20,000
1200°F.	.....	7,000	7,000	8,000	9,000	9,000	12,700	8,000	8,200
1500°F.	.....	1,200	1,200	1,000	1,000	1,000	2,800	650	1,500

[a] Mechanical properties of strip, plate, bars, etc., may be slightly different from those of sheet.

tent increases to about 0.08% the amount of carbon which can be precipitated slowly increases, but in many cases this is not detrimental to the corrosion resistance. At higher carbon levels carbide precipitation increases rapidly. The low-carbon stainless steels are, consequently, preferred for arc and gas welding. Type 304 with a maximum carbon content of 0.08% is widely used. Recently, extra-low-carbon stainless steels of the 18–8 and 18–8 Mo types, containing a maximum of 0.03% carbon, have become available.

of 18–8 S stock in the as-welded condition. Figure 4 is a photomicrograph of a section through the heat-affected zone of 18–8 stock in as-welded condition, and Fig. 5 is a photomicrograph of a section through the same zone as in Fig. 4, but after heat treating. Note the presence of carbides along the grain boundaries in Fig. 4.

Carbide precipitation in austenitic weld metals will be found in grain boundaries or around and within ferrite patches if they exist. Although a single bead of

Table 4—Effect of Various Elements in Austenitic Chromium-Nickel Steels

Element	Types of Steel	Effects
Carbon	All types	Promotes the formation of precipitates harmful to corrosion resistance. In so far as possible the carbon should be low for best results in service after welding.
Columbium	347	Primarily to combine with carbon to reduce susceptibility to intergranular corrosion. Grain refiner. Promotes the formation of ferrite.
Manganese	All types	Promotes the formation of austenite.
Molybdenum	316, 317	Improves strength at high temperatures. Improves corrosion resistance to reducing media. Promotes the formation of ferrite.
Phosphorous and selenium, or sulfur	303	Increases machinability but makes welding difficult. Generally lowers corrosion resistance slightly.
Silicon	302B, 314	Increases resistance to scaling. Promotes the formation of ferrite.
Titanium	321	Primarily to combine with carbon to reduce susceptibility to intergranular corrosion. Grain refiner. Promotes the formation of ferrite.

Figures 1 to 5 show the effect of carbide precipitation detected by macro-etching with nitric-hydrofluoric acid solution, and by microscopic examination of specimens etched electrolytically. Figure 1 shows two pieces of 18–8 steel (Type 302) welded to two pieces of 18–8 S (Type 304). The pieces marked *A* (right) have been subsequently heat treated at 1950 to 2050°F., and the other pieces (left) are in the as-welded condition. All pieces have been etched with hot nitric-hydrofluoric acid solution. Note the *weld decay* or corroded zone caused by carbide precipitation alongside the weld in the 18–8 (Type 302) as-welded piece. The corresponding zone in the other piece is practically free from corrosion. Note also that in the heat-treated weld both steels are completely free from the corrosion-affected zone, showing that the precipitated carbides have gone back into solution. Figure 2 is a photomicrograph of a section through 18–8 stock prior to welding. Figure 3 is a photomicrograph of a section through the heat-affected zone

weld metal usually does not show evidence of carbide formation because of the rapid cooling from molten temperatures, the heat effect from subsequent beads in multiple-pass deposits will show bands of carbide precipitation within all but the last pass of weld metal. Intergranular corrosion resulting from carbide precipitation is generally much less when ferrite is present because many carbides precipitate within ferrite patches and correspondingly fewer at the grain boundaries. Weld metals containing columbium are relatively free from intergranular carbides, even in multipass welds, because of the stabilizing effect of columbium which forms carbides more readily than chromium.

Compositions which in wrought form will be found to be fully austenitic will often show the presence of small islands of delta ferrite in an austenite matrix in the cast or weld metal form. Figures 6 and 7 show the microstructure of typical fully austenitic weld beads and those containing some delta ferrite.

RELATION BETWEEN HARDNESS AND TENSILE STRENGTH OF MEDIUM CARBON STEEL AND CUTTING SPEED

Tensile Strength Tons per sq. in.	Brinell No.	Speed Factor
25	120	1·64
30	146	1·28
34	160	1·00
38	176	0·83
44	200	0·67
48	220	0·57
53	240	0·51

POWER CONSUMPTION WHEN CUTTING MEDIUM CARBON STEEL AND CAST IRON

	Steel	Cast Iron
Brinell No.	178	166
Tensile strength, tons per sq. in.	37·5	33·4
Cutting angle of tool	70°	75°
Plan angle of tool	60°	60°
Clearance angles	6°	8°
Nose radius	⅛ in.	⅛ in.

MEDIUM CARBON STEEL CUT AT 100 FT. PER MINUTE. NO COOLANT USED. NET H.P. CONSUMED.

Depth of Cut in In.	Traverse in In.			
	1/16	1/8	¼	½
1/16	0·8	1·4	3·1	4·2
1/8	1·6	2·5	6·1	8·4
¼	3·2	5·6	12·2	16·5
⅜	4·7	8·5	18·3	25·3
½	6·2	11·3	24·4	33·7
¾	7·8	14·1	30·5	42·0
7/8	9·4	16·9	36·5	50·5
1	12·4	22·5	48·8	67·3

CAST IRON CUT AT 60 FT. PER MINUTE. NO COOLANT USED. NET H.P. CONSUMED.

Depth of Cut in In.	Traverse in In.			
	1/16	1/8	¼	½
1/16	0·17	0·36	0·69	1·16
1/8	0·32	0·62	1·17	1·97
¼	0·67	1·15	2·12	3·61
⅜	1·02	1·70	3·07	5·25
½	1·35	2·20	4·02	6·88
¾	1·69	2·72	4·97	8·63
7/8	2·02	3·25	6·92	10·15
1	2·70	4·30	7·82	13·43

RELATION BETWEEN TEMPERATURE AND TENSILE STRENGTH OF IRON AND STEEL LB. PER SQ. IN. AT VARYING TEMPERATURES

Temperature ° C.	Wrought Iron	0·3 Carbon Steel	0·5 Carbon Steel	0·75 Carbon Steel	1·0 Carbon Steel
1200	2,250	—	—	—	—
1150	3,500	4,000	—	—	—
1100	4,500	6,000	5,600	5,500	—
1050	5,100	5,800	7,300	8,800	13,000
1000	5,500	6,700	8,900	11,000	17,000
975	7,000	8,500	10,700	13,800	22,000
870	8,500	10,000	12,500	15,800	21,000
760	12,500	14,000	161,500	17,000	—
650	18,000	—	—	—	—
540	25,500	—	—	—	—
[illegible] 15	50,000	70,000	85,000	100,000	120,000

ENERGY REQUIRED TO REMOVE 1 CU. IN. OF METAL. VALUES IN 1000 IN.-LB

Material	Brinell No.	Feed per Rev. in In.				
		0·0025	0·005	0·010	0·020	0·040
Acme iron	89	714	538	402	—	—
Wrought iron	93	—	—	—	—	—
Machinery steel	109	672	497	405	367	—
Malleable iron	112	316	244	221	191	202
High-carbon iron	113	256	215	193	173	—
Hard malleable iron	118	315	244	201	179	177
Annealed cast steel	121	607	432	374	—	—
Grey iron	143	298	237	206	170	—
Cold-rolled steel	181	—	—	394	350	—
Annealed silver steel	237	—	—	—	—	—

HARDNESS TABLE FOR WELL-BORING DRILL BITS

Temperature ° C.	Brinell No. Oil-quenched	Brinell No. Water-quenched
680	187	187
710	187	187
740	187	187
770	187	187
780	187	187
800	302	444
830	321	512
850	376	512
880	418	—
900	444	—
960	512	—

Quenching Temperature Recommended: 900–950° C. in oil

Plating Stainless Steel.—For plating these steels with silver, copper, or nickel, as may on occasion be required, the normal plating solutions are unsuitable. Use 25 per cent. solution of sulphuric acid, employing a lead rod anode and the stainless steel as the cathode. Voltage 4 to 6 volts. Temperature of solution held at 20 to 27° C. Alternatively, use 30 per cent. hydrochloric acid solution, using a carbon anode with voltage as above, holding bath temperature at 40° C. Carefully clean before and rinse in alkali and wash after plating.

Table 2—Recommended Practices for Spot-Welding Stainless Steels

THICKNESS OF THINNEST OUTSIDE PIECE (SEE NOTES 1, 2, 3 AND 4 BELOW)	ELECTRODE DIAMETER AND SHAPE (SEE NOTES)		NET ELECTRODE FORCE	WELD TIME (SINGLE IMPULSE)	MINIMUM SHEAR STRENGTH LB. — ULTIMATE TENSILE STRENGTH OF METAL			WELDING CURRENT (APPROX.) AMPS.		DIAMETER OF FUSED ZONE	MINIMUM WELD SPACING (SEE NOTE 6 BELOW)	MINIMUM CONTACTING OVERLAP
	D, IN., MIN.	d, IN., MAX.	LB.	CYCLES (60 PER SEC)	70000 UP TO 90000 PSI	90000 UP TO 150000 PSI	150000 PSI AND HIGHER	TENSILE STRENGTH BELOW 150000 PSI	TENSILE STRENGTH 150000 PSI AND HIGHER	IN., APPROX.	℄ TO ℄ IN.	IN.
INCHES												
0.006	3/16	3/32	180	2	60	70	85	2000	2000	0.045	3/16	3/16
0.008	3/16	3/32	200	3	100	130	145	2000	2000	0.055	3/16	3/16
0.010	3/16	1/8	230	3	150	170	210	2000	2000	0.065	3/16	3/32
0.012	1/4	1/8	260	3	185	210	250	2100	2000	0.076	1/4	1/4
0.014	1/4	1/8	300	4	240	250	320	2500	2200	0.082	1/4	1/4
0.016	1/4	1/8	330	4	280	300	380	3000	2500	0.088	5/16	1/4
0.018	1/4	1/8	380	4	320	380	470	3500	2800	0.093	5/16	1/4
0.021	1/4	5/32	400	4	370	470	500	4000	3200	0.100	5/16	5/16
0.025	3/8	5/32	520	5	500	600	680	5000	4100	0.120	7/16	3/8
0.031	3/8	3/16	650	5	660	800	930	6000	4800	0.130	1/2	3/8
0.034	3/8	3/16	750	6	800	920	1100	7000	5500	0.150	9/16	7/16
0.040	3/8	3/16	900	6	1000	1270	1400	7600	6300	0.160	3/8	7/16
0.044	3/8	3/16	1000	8	1200	1450	1700	8700	7000	0.180	11/16	7/16
0.050	1/2	1/4	1200	8	1450	1700	2000	9500	7500	0.190	3/4	1/2
0.056	1/2	1/4	1350	10	1700	2000	2450	10300	8300	0.210	7/8	9/16
0.062	1/2	1/4	1500	10	1950	2400	2900	11000	9000	0.220	1	5/8
0.070	5/8	1/4	1700	12	2400	2800	3550	12300	10000	0.250	1 1/8	5/8
0.078	5/8	5/16	1900	14	2700	3400	4000	14000	11000	0.275	1 1/4	11/16
0.094	5/8	5/16	2400	16	3550	4200	5300	15700	12700	0.285	1 3/8	3/4
0.109	3/4	3/8	2800	18	4200	5000	6400	17700	14000	0.290	1 1/2	13/16
0.125	3/4	3/8	3300	20	5000	6000	7600	18000	15500	0.300	2	7/8

NOTES:

1. TYPES OF STEEL — 301, 302, 303, 304, 308, 309, 310, 316, 317, 321, 347 AND 349
2. MATERIAL SHOULD BE FREE FROM SCALE, OXIDES, PAINT, GREASE AND OIL
3. WELDING CONDITIONS DETERMINED BY THICKNESS OF THINNEST OUTSIDE PIECE "T"
4. DATA FOR TOTAL THICKNESS OF PILE-UP NOT EXCEEDING 4 "T". MAXIMUM RATIO BETWEEN TWO THICKNESSES 3 TO 1
5. ELECTRODE MATERIAL, CLASS 2, CLASS 3 OR CLASS 11
   MINIMUM CONDUCTIVITY — 75% 45% 30% OF COPPER
   MINIMUM HARDNESS — 75 95 98 ROCKWELL "B"
6. MINIMUM WELD SPACING IS THAT SPACING FOR TWO PIECES FOR WHICH NO SPECIAL PRECAUTIONS NEED BE TAKEN TO COMPENSATE FOR SHUNTED CURRENT EFFECT OF ADJACENT WELDS. FOR THREE PIECES INCREASE SPACING 30 PER CENT

Table 3—Recommended Practices for Spot Welding Low-Alloy and Medium-Carbon Steels

MATERIAL (SEE NOTES 1, 2, 3 AND 4)			ELECTRODE DIAMETER AND SHAPE			NET ELECTRODE WELD AND TEMPER FORCE	WELD TIME	QUENCH TIME	TEMPER TIME	WELDING CURRENT (APPROX.)	TEMPER CURRENT	MINIMUM CONTACTING OVERLAP	MINIMUM WELD SPACING (SEE NOTE 5 BELOW)	DIAMETER OF FUSED ZONE	MINIMUM WELD STRENGTH		RATIO TENSILE SHEAR STRENGTH
TYPE	CONDITION	"T" THICKNESS INCHES	D INCHES MIN	d INCHES	R INCHES	LB.	CYCLES (60 PER SEC.)	CYCLES (60 PER SEC.)	CYCLES (60 PER SEC.)	AMPS	% OF WELDING CURRENT	IN.	IN.	INCHES (APPROX.)	SHEAR STRENGTH LBS	TENSILE STRENGTH LBS	PERCENT
SAE [illegible]	HOT ROLLED	0.040	5/8	1/4	6	1475	6	17	6	16000	90	1/2	1	0.23	1360	920	68
SAE [illegible]	HOT ROLLED	0.040	5/8	1/4	6	1475	6	20	6	14200	81	1/2	1	0.22	1560	520	33
SAE [illegible]	HOT ROLLED	0.040	5/8	1/4	6	1475	6	24	6	13800	80	1/2	1	0.21	1000	580	33
SAE [illegible]	HOT ROLLED	0.040	5/8	1/4	6	1475	6	18	6	13000	90	1/2	1	0.22	2120	640	30
SAE [illegible]	NORMALIZED & DRAWN	0.031	5/8	3/16	6	900	4	12	4	8250	84	7/16	3/4	0.16	1084	290	27
SAE [illegible]	NORMALIZED & DRAWN	0.062	3/4	5/16	6	2000	10	45	10	13900	77	5/8	1 1/2	0.27	3840	1440	37
SAE [illegible]	NORMALIZED & DRAWN	0.125	1	5/8	10	5500	45	240	90	21800	86	7/8	2 1/2	0.55	13080	4000	29
NE [illegible]	NORMALIZED & DRAWN	0.031	1/2	3/16	6	900	4	12	4	8650	88	7/16	3/4	0.16	1220	574	47
NE [illegible]	NORMALIZED & DRAWN	0.062	5/8	5/16	6	1800	10	36	10	12800	83	5/8	1 1/2	0.27	4240	2200	52
NE [illegible]	NORMALIZED & DRAWN	0.125	1	5/8	10	4500	45	210	90	21800	84	7/8	2 1/2	0.55	13200	4500	34
NE [illegible]	NORMALIZED & DRAWN	0.018	1/2	1/8	6	350	3	4	3	3900	85	7/16	5/8	0.10	400	[illegible]	50
NE [illegible]	NORMALIZED & DRAWN	0.062	5/8	5/16	6	1600	10	28	10	12250	85	5/8	1 1/2	0.27	3330	1800	55
NE [illegible]	NORMALIZED & DRAWN	0.125	1	5/8	10	4500	45	180	90	22700	85	7/8	2 1/2	0.55	12760	4500	35
NAV [illegible]	ANNEALED	0.040	5/8	1/4	6	1000	6	14	5	12000	79	1/2	1	0.22	1640	1020	61
NAV [illegible]	1/2 HARD	0.040	5/8	1/4	6	1240	6	14	5	12000	79	1/2	1	0.22	2040	1020	60
NAV [illegible]	ANNEALED	0.070	3/4	11/32	6	2325	8	34	8	22600	67	11/16	1 7/8	0.32	4250	2800	66
NAV [illegible]	1/2 HARD	0.070	3/4	11/32	6	2800	8	34	8	22800	71	11/16	1 7/8	0.32	5050	2520	60

NOTES

1. MATERIAL SHOULD BE PICKLED OR OTHERWISE CLEAN
2. DATA IS FOR TWO PIECES OF EQUAL THICKNESS. EACH
3. ELECTRODE MATERIAL [illegible] CLASS 2 MINIMUM ELECT

SARGENT & LUNDY
ENGINEERS
FOUNDED 1891
55 EAST MONROE STREET
CHICAGO, ILLINOIS 60603

RECEIVED

February 13, 1986
Project No. 6972-62
NUPR-8264

Commonwealth Edison Company
Dresden Station - Units 2&3

Technical Evaluation of Proposals for
Specification K-4070, Installation of
Fire-Resistant Electrical Raceway Coverings

Mr. J. E. Hausman
Project Engineer
Station Nuclear Engineering Department
Commonwealth Edison Company
P. O. Box 767 - (35 FNW)
Chicago, Illinois 60690

Dear Mr. Hausman:

Sargent & Lundy (S&L) has completed a review of the technical portions of proposals for the installation of fire-resistant electrical raceway coverings submitted by the following bidders:

- A&M Insulation Co., dated December 2, 1985
- Brand Industrial Services, Inc., (BISCO), dated November 27, 1985
- Loyd's, Inc., dated December 2, 1985
- Tech-Sil, Inc., dated November 26, 1985
- Transco Products, Inc., (TPI), dated December 2, 1985
- Williams Power Services, Inc., dated November 27, 1985

Only BISCO took any technical exceptions to Specification K-4070, but we have found those exceptions to be acceptable. The technical clarifications made by Tech-Sil are also acceptable. We understand Station Construction Department will assign the necessary cost penalties to the BISCO proposal for their exceptions regarding mobilization and personnel training costs.

Of all bidders, only TPI has recent experience installing fire wrap material at Commonwealth Edison Company (CECO) stations. TPI recently installed 3M material at Quad Cities Station and they installed TSI material at Byron and LaSalle County Stations. It is possible that mobilization and procedure review costs could be saved if the contract were awarded to TPI. We suggest that the Station Construction Department provide the appropriate cost credit for TPI. S&L personnel have indicated that BISCO has performed similar work satisfactorily at Clinton Station.

S&L has completed an evaluation of the material cost for the 3M, TSI-rigid, and TSI-flexible fire wrap systems. A summary of this evaluation is presented in Attachment A. Based on cost data provided by 3M and TSI, we find that the 3M system would have the lowest material cost for the work to be done at Dresden.

Material cost estimates for the 3M system at Dresden are approximately 40 percent greater than those realized at Quad Cities Station. Using that ratio and adjusting for the "mix" of work to be performed at Dresden Station, we expect the installation cost to be 50 to 60 percent higher than that at Quad Cities Station.

Meaningful installation cost data for the three systems was not available for comparison. Installation techniques for the 3M and TSI-flexible wrap system are not significantly different, and the cost should not differ markedly. Installation of the TSI-rigid system may be very difficult in most places at Dresden Station due to congestion and many conduit directional changes. Based on the above, we recommend purchase of the 3M fire wrap material.

Bidders who supplied 3M technical data included the 3M standard conduit wrap detail (5300-C8-B), but not the alternate (5300-C9) that was developed and tested for use at Quad Cities Station. S&L recommends that the purchase order for this work specify the use of detail 5300-C9 rather than 5300-C8-B for conduits to be wrapped with 3M fire wrap material at Dresden Station.

We understand that CECO will evaluate the terms and conditions and other non-technical aspects of the proposals. We concur with the CECO preferences to have the contractor procure the fire wrap material as part of this contract. We recommend awarding the contract for Specification K-4070 to the lowest bidder.

Mr. J. E. Hausman
Commonwealth Edison Company

February 13, 1986
Page 3

If there are any questions, please contact me.

Yours very truly,

J. M. Nosko
Mechanical Project Engineer

JMN:rc
In duplicate
Attachment
Copies:
J. J. McDonald (1/1)
G. S. Mavropoulos (1/1)
R. Noel (1/1)
R. H. Jason (1/0)
A. Walser (1/0)
F. W. Fischer (1/1)
C. E. Ruth (1/1)

ATTACHMENT A

FIRE WRAP MATERIAL COST COMPARISON

A. Scope of Work

1. Iso. condenser valve conduit in U2 Rx Building basement (Task 1.02) - 200 ft. of 3" conduit.

2. Iso. condenser valve conduit in U3 Rx Building basement (Task 1.02) - 45 ft. of 3" conduit.

3. DG 2/3 cables in U3 Rx Building (Task 1.08) - 120 ft. of 4" conduit and 35 ft^2 of junction boxes.

4. Cable tray in TB common area and U3 corridor - 800 ft^2 of tray.

5. Cable tray riser by AEER - 275 ft^2 of tray.

6. Bus duct in U3 Rx Building (Task 1.07) - 70 ft^2 of duct surface.

7. Transfer switch and conduits in Cribhouse (Task 1.25) - 25 ft of 3" conduit, 20 ft. of 2" conduit, and 15 ft^2 of transfer switch box.

B. Cost obtained from 12/31/85 3M letter and 01/15/86 TSI letter.

C. Estimated Material Costs

3M (flexible)	TSI (rigid)	TSI (flexible)
$70,000	$85,500	$152,000

3M Center
St. Paul, Minnesota 55144-1000
612/733 1110

INITIAL

3M

April 6, 1987

Dave Contorno
Transco Products Incorporated
55 East Jackson Boulevard
Chicago, IL 60604-4166

Dear Dave:

This letter is in regard to spacing of the bands for Electrical Raceway System at Dresden Power Station. Band spacing is typically 8" maximum for the Interam™ Flexible Wrap System, however, areas may be encountered where 8" spacing can not be met. In these cases, a maximum band spacing of 14" may be used as long as the overall average of band spacing is maintained at 12" for a distance of 4 ft.

Sincerely yours,

R. R. Licht

RRL/dd

cc: R. G. Koza
A. J. Marlor
K. A. Jensen

Layer Requirements

Electrical Raceway

Item	E-50 Series 1 Hour	E-54A 3 Hour	Reg Guide 1.75
Conduit	3 E-53A	5 E-54A	1 E-50A
Cable Tray	2 E-54A	5 E-54A	1 E-50A
Cable Bundles	3 E-54A	5 E-54A	1 E-50A
Junction Boxes	3 E-54A	5 E-54A	1 E-50A
Full Supports	1 E-54A	4 E-54A + options	N/A
Partial Supports	1 E-54A for 12" + options	5 E-54A for 12" + options	N/A

Structural Steel

Member Weight lbs./ft. (kg/m)	ASTM E119			UL1709	
	1 hr.	2 hr.	3hr.	1½ hr.	2½ [illegible]
49 lbs. (22.23 kg) and greater	1 E-53A	2 E-53A	3 E-53A	2 E-53A	3 E-[illegible]
20lbs. (9.07 kg) to 48 lbs. (21.77 kg)	1 E-54A	2 E-54A	3 E-54A	3 E-54A	3 E-[illegible]
Less than 20 lbs. (9.07 kg)	2 E-53A	3 E-53A	3 E-53A	3 E-54A	3 E-[illegible]

Objective: Average beam and column temperature ≤ 10[illegible] (537°C)

Physical Description

Unless otherwise specified, 3-mil aluminum foil is laminated to E-50 Series Mats.

	E-50A	E-53A		E-54A	
Mat Thickness in (mm)	.203 (5,16)	.310 (7,87)		.408 (10,36)	
Roll Width in (m)	49 (1,24)	24.5 (0,622)	49 (1,24)	24.5 (0,622)	49 (1,24)
Roll Length ft (m)	25 (7,62)	25 (7,62)	16 (4,88)	20 (6,10)	16 (4,88)
Mat Area/Roll ft (m²)	102.1 (9,5)	51.0 (4,74)	65.3 (6,07)	40.8 (3,79)	65.3 (6,07)
Roll Weight lbs (kgs)	96.0 (43,6)	72.4 (32,8)	92.7 (42,1)	73.6 (33,5)	118.2 (53,7)
Weight/Unit Area lb/ft² (kg/m²)	.94 (4,59)	1.42 (6,93)		1.87 (8,84)	
Bulk Density lb/ft³ (kg/m³)	55.6 (889,5)	56.8 (909,4)		54.3 (870,1)	
Color	Gray	Green		Blue	

St. Paul, Minnesota 55144-1000
612/733-1110

3M

January 26, 1987

FEDCO	7-3
INITIAL	DM

Mr. David Contorno
TRANSCO PRODUCTS, INC.
55 East Jackson Boulevard
Chicago, Illinois 60604-4166

Dear Dave,

In regard to our phone conversation concerning Interam™ E-54A fire protection mat, Interam™ E-54A is manufactured from the identical materials used to manufacture E-50A. The differences between E-54A and E-50A are product thickness and color. E-54A is ~.4" thick and blue; whereas, E-50A is ~.2" thick and gray. Thus, one layer of E-54A can replace two layers of E-50A.

3M has developed and qualified a modified 1-hour system based on replacing Interam™ E-50A with Interam™ E-54A for cable trays and conduit.

If you require additional information, please contact me at 612/733-7079.

Very truly yours,

Richard R. Licht
Product Development Supervisor

RRL:mz

bcc: D.R.Coy
R.J.Israelson
[illegible] A.Jensen
R.G.Koza
A.J.Marlor

Volume 7

DRESDEN 2 & 3

FIRE PROTECTION PROGRAM DOCUMENTATION PACKAGE

Volume Index

Volume 7 – Fire Protection Analysis/Supplementary Guidance (Continued)

IV Supplementary Guidance Review

V Emergency Lighting Report

1 Procedure for Emergency Lighting Walkdown, PI-DR+QC-6972-4

Meeting Notes, February 2 & 3, 1987, Observation of Appendix R emergency lighting under blackout and brownout conditions

Meeting Notes, February 2 & 3, March 13 & 14, March 17 & 18, March 23 & 24. Summary relates adequacy of the safe shutdown battery packs.

2 Dresden Safe-Shutdown Emergency Light Matrix

VI Rated Barrier Maintenance and Surveillance Program

VII Communications

1 Communication Testing and Verification for Appendix R Safe Shutdown Procedures

VIII Safe Shutdown Equipment Access

IX Volume 7 Microfiche

X OSHA Fire Protection Requirements

Date: May 25, 1999

To: A. Casillo
Design Engineer-Fire Protection

From: M. Dillon 5/25/99
System Engineer-Fire Protection

Subject: Dresden Safe-shutdown Emergency Light Matrix

The safe-shutdown emergency light matrix for Dresden is being submitted to you for inclusion into the next update of the Dresden Fire Protection Program Documentation Package (DFPPDP).

This matrix is to be added to the other items being compiled for the upcoming revision of the DFPPDP.

If you have any questions please contact me at Ext.-2443.

AccessEgress Paths

SSD Path	Operator	Fire Zone	from epn	to epn	EPN Description	Manual Operation	Light # 1	Light # 2	Light # 3	Light # 4	Light # 5	Light # 6	Light # 7	Light # 8
A	U2 NSO	2 0	n/a	n/a	Controls procedure from control room		216-1	216-2	311A-1	311A-2	311-1	311-2	216A-1	216A-2
A	HVO	8 2 5 A	Bus 25	MCC 2A; MCC 2B	Start at SSD equip cart at Bus 25, North of AEER		239-1	243-1	243-2	244-1	238-2			
	HVO	1 1.2.2	Bus 25	MCC 2A; MCC 2B			258-1	258-2	259-1	259-2				
	HVO	1 1.2.3	Bus 25	MCC 2A; MCC 2B			263-1	263-2						
A	HVO	1 1 2 4	n/a	n/a	MCC 2A, MCC 2B	M	266-1	204-1	204-2	268-1	205-1	205-2	269-1	269-2
A	HVO	1 1.2.4	MCC 2A; MCC 2B	MCC #3			205-1	268-1	268-2	204-1	204-2	266-1		
A	HVO	1 1.2.3	MCC 2A; MCC 2B	MCC #3			263-1	263-2						
A	HVO	1.1 2.2	MCC 2A; MCC 2B	MCC #3			258-1	258-2	259-1	259-2				
A	HVO	8 2 5 A	MCC 2A; MCC 2B	MCC #3			238-2	245-1	245-2					
A	HVO	8.2.5.C	MCC 2A; MCC 2B	MCC #3			341-1	341-2						
A	HVO	8.2.5.E	MCC 2A; MCC 2B	MCC #3			314-1							
A	HVO	8.2.6.E	MCC 2A; MCC 2B	MCC #3			316-3	343-1						
A	HVO	6.1	n/a	n/a	MCC #3		329-1	329-2						
A	HVO	8.2 6 E	MCC #3	SWGR 28			343-1	316-3						
A	HVO	8 2 5 E	MCC #3	SWGR 28			314-1							
A	HVO	8 2.5.C	MCC #3	SWGR 28			341-2	341-2	245-2	245-1	238-2			
A	HVO	1 1.2.2	MCC #3	SWGR 28			258-1	258-2	259-1					
A	HVO	1 1.2.3	MCC #3	SWGR 28			263-1	263-2						
A	HVO	1 1 2 4	n/a	n/a	SWGR 28	M	266-1	204-2	204-1	268-2	268-1	205-1	205-3	229-2
A	HVO	1 1 2.3	n/a	n/a	Bus 23-1	M	263-1	263-2	202-1	298-1	298-3	230-2		
A	HVO	1 1 2 2	Bus 23-1	Bus 23			259-1	259-2	258-1	258-2				
A	HVO	8 2 5 A	Bus 23-1	Bus 23			238-2	244-1	244-2	243-1	243-2	239-2		
A	HVO	8 2 6 A	n/a	n/a	Bus 23		104-1	104-2	248-1					
A	HVO	8 2 5 A	Bus 23	2/3 EDG Fuel Oil Xfer Pump			238-2	244-1	244-2	243-1	243-2	239-2		
A	HVO	1 1 2 2	Bus 23	2/3 EDG Fuel Oil Xfer Pump			258-1	258-2	201-1	201-2	261-1	261-2	260-1	
A	HVO	9 0 C	n/a	n/a	2/3 EDG Fuel Oil Xfer Pump	M	262-1	262-2	287-2	217-2	277-2	276-3	276-1	277-1
A	HVO	1 1 2 2	2/3 EDG Fuel Oil Xfer Pump	SWGR 29			258-1	258-2	201-1	201-2	261-1	261-2	260-1	259-1
A	HVO	1 1 2 3	2/3 EDG Fuel Oil Xfer Pump	SWGR 29			263-1	263-2						
A	HVO	1 1 2 4	n/a	n/a	SWGR 29	M	266-1	204-2	204-1	268-2	268-1	205-1	205-3	229-2
A	U2 EA	8 2 5 A	Bus 25	MCC 28-3	Start at SSD equip cart at Bus 25, North of AEER		239-2	243-1	243-2	244-1				
A	U2 EA	8 2 6 A	n/a	n/a	MCC 28-3		240-1	240-2						
A	U2 EA	8 2 5 A	MCC 28-3	MCC 28-1			239-2	243-1	243-2	244-2	238-2			
A	U2 EA	1 1 2 2	n/a	n/a	MCC 28-1		258-1	258-2	201-1	201-2	295-2	261-1		
A	U2 EA	8 2 5 A	n/a	n/a	MCC 29-2	M	239-2	243-1	243-2	244-2	238-2	239-3		
A	U2 EA	1 1 2 2	MCC 29-2	U2 ISCO Sightglass Valves (4)			258-1	258-2	259-1	259-2				
A	U2 EA	1 1 2 3	MCC 29-2	U2 ISCO Sightglass Valves (4)			263-1	263-2						
A	U2 EA	1 1 2 4	MCC 29-2	U2 ISCO Sightglass Valves (4)			266-1	204-1	204-2	268-2	205-1	205-2	270-2	
A	U2 EA	1 1 2.5 A	n/a	n/a	U2 ISCO Sightglass Valves (4)	M	210-2	210-1	210-3					
A	U2 EA	1 1 2 4	U2 ISCO Sightglass Valves (4)	Valve 2-0301-9A or 2-0301-9B			266-1	204-1	204-2	268-2	205-1	205-2	270-2	
A	U2 EA	1 1 2 3	U2 ISCO Sightglass Valves (4)	Valve 2-0301-9A or 2-0301-9B			263-1	263-2						
A	U2 EA	1 1 2 2	n/a	n/a	Valve 2-0301-9A or 2-0301-9B		259-2	278-2	295-1	201-2				
A	U1 EA	8 2 5 A	Bus 25	MO 2-1202-2 & 2-1201-3	Start at SSD equip cart at Bus 25, North of AEER		239-1	243-1	243-2	244-1	238-2			

AccessEgress Paths

SSD Path	Operator	Fire Zone	from epn	to epn	EPN Description	Manual Operation	Light # 1	Light # 2	Light # 3	Light # 4	Light # 5	Light # 6	Light # 7	Light # 8
A	U1 EA	1.1.2.2	Bus 25	MO 2-1202-2 & 2-1201-3			259-1	259-2	258-1	258-2				
A	U1 EA	1.1.2.3	Bus 25	MO 2-1202-2 & 2-1201-3			263-1	263-2						
A	U1 EA	1.1.2.4	n/a	n/a	RWCU Isolation; MO 2-1202-2 & 2-1201-3	M	266-2	204-1	204-2	268-2	268-1	299-1	299-2	
A	U1 EA	8.2.5.A	Bus 25	2-4705-504			239-1	243-1	243-2	244-1				
A		8.2.5.C	n/a	n/a	Alt. RWCU Isolation		245-1	245-2	212-3					
A	U1 EA	8.2.5.C	n/a	n/a	2-3999-359 & 2/3-3999-348 valves		212-1	242-2	T-Alt Light #2					
A	U1 EA	8.2.2.A	n/a	n/a	CRD Pump Room Valves (8)		233A-1	233A-2	233-1	233-2				
A	U1 EA	8.2.5.C	CRD Pump Room Valves (8)	MCC 25-2			241-2	241-1	242-2	212-1	245-1	245-2		
A	U1 EA	8.2.5.A	n/a	n/a	MCC 25-2		245A-3	244-2	244-1	243-1	243-2	239-3		
A	U1 EA	8.2.5.C	MCC 25-2	MO 2-0301-2A			245-1	245-2	212-1	242A-2	241-1	241-2		
A	U1 EA	8.2.2.A	n/a	n/a	MO 2-0301-2A	M	233A-1	233A-2	233-1	233-2	234-1			
A	U1 EA	8.2.2.A	n/a	n/a	Panel 2252-76		233-2							
A	U1 EA	8.2.5.C	Panel 2252-76	SW Valves (11)			241-2	241-1	242A-1	242A-2				
A	U1 EA	8.2.6.C	n/a	n/a	SW Valves (11)	M	214-2	214A-1	214A-2					
A	OOSS	8.2.5.A	Bus 25	IR 2202-5; IR 2202-6	Start at SSD equip cart at Bus 25, North of AEER		239-1	243-1	243-2	244-1	238-2			
A	OOSS	1.1.2.2	Bus 25	IR 2202-5 IR 2202-6			258-1	258-2	259-1	259-2				
A	OOSS	1.1.2.3	n/a	n/a	IR 2202-5; IR 2202-6	M	263-1	263-2	202-2	T-Alt Light #	297-2			
A	OOSS	1.1.2.2	n/a	n/a	IR 2202-7, IR 2202-8	M	259-1	259-2	278-3					
A	OOSS	9.0.C	n/a	n/a	2/3 DG	M	287-2	217-1	217-2	277-2	277-1	276-1	276-3	
A	Rad Rover	8.2.5.A	Bus 25	Outside/Panel 2223-119	Start at SSD equip cart at Bus 25, North of AEER		239-3							
A	Rad Rover	outside	n/a	n/a	Panel 2223-119 in MUDS Building		N/A							
A	Rad Rover	11.3	n/a	n/a	Cribhouse: MO 2-3906, PI 2/3-4141-4A, 2/3 DFP		338-2	337-1	337-2	272-2	272-3			
A	Rad Rover	outside	n/a	n/a	CST Sheds 2/3A, 1A, 2/3B		N/A							
A	Rad Rover	18.7.2	n/a	n/a	ISCO Pumphouse		400A-1	400A-2	400B-1	400B-2	400C-1	400C-2		
A	Rad Rover	11.3	n/a	n/a	Cribhouse: SW Pump, 2/3 DGCWP	M	338-2	337-1	337-2	272-2	272-3	273-1		
A	Rad Rover	9.0.C	n/a	n/a	2/3 Diesel Oil Xfer Pump		262-1	262-2	287-2	217-1	217-2	277-2	276-3	
A	Rad Rover	18.7.2	n/a	n/a	ISCO Pumphouse: FI 2/3-4341-152		400A-1	400A-2	400B-1	400B-2	400C-1	400C-2		

AVAILENDIXENT 13

AccessEgress Paths

SSD Path	Operator	Fire Zone	from epn	to epn	EPN Description	Manual Operation	Light # 1	Light # 2	Light # 3	Light # 4	Light # 5	Light # 6	Light # 7	Light # 8
B1	U2 NSO	2 0	n/a	n/a	Controls procedure from control room		216-1	216-2	311A-1	311A-2	311-1	311-2	216A-1	216A-2
B1	U3 NSO	2 0	n/a	n/a	Controls procedure from control room		216-1	216-2	311A-1	311A-2	311-1	311-2	216A-1	216A-2
B1	U3 AUX NSO	8.2.5.A	Bus 25	Panel 2202-76	Start at SSD equip cart at Bus 25, North of AEER		239-2							
B1	U3 AUX NSO	outside	Bus 25	Panel 2202-76			N/A							
B1	U3 AUX NSO	9 0.C	n/a	n/a	Panel 2202-76; 2/3 DG, FI 2/3-3941-882A		262-1	262-2	287-1					
B1	U3 AUX NSO	11.2.3	n/a	n/a	U2 HPCI Turbine Manual Trip Lever, go down ladder from diesel room	M	290-1	290-2	290-3					
B1	HVO	8.2.5.A	Bus 25	Bus 2A-1; Bus 2B-1	Start at SSD equip cart at Bus 25, North of AEER		239-2							
B1	HVO	8.2.6.A	Bus 25	Bus 2A-1; Bus 2B-1			104-1	104-2	247-1	247-2				
B1	HVO	8.2.7	Bus 25	Bus 2A-1; Bus 2B-1			247-3							
B1	HVO	7.0.A	n/a	n/a	Bus 2A-1; Bus 2B-1	M	231-1	231A-3						
B1	HVO	7.0.A	Bus 2A-1; Bus 2B-1	Panel 902-32			231-1							
B1	HVO	8.2.7	Bus 2A-1; Bus 2B-1	Panel 902-32			247-3							
B1	HVO	8.2.6.A	Bus 2A-1; Bus 2B-1	Panel 902-32			247-1	247-2	104-1	104-2				
B1	HVO	8.2.5.A	Bus 2A-1; Bus 2B-1	Panel 902-32			239-2							
B1	HVO	6.2	n/a	n/a	Panel 902-32		220-1	220-2	220A-1	220A-2				
B1	HVO	8.2.5.A	Panel 902-32	MCC 2A; MCC 2B			239-1							
B1	HVO	8.2.6.A	Panel 902-32	MCC 2A; MCC 2B			248-1	249-1	251-2	251-1	240-1	104-1	104-2	
B1	HVO	8.2.8	Panel 902-32	MCC 2A; MCC 2B			256-1	256-2	257-1	267-2	267-1			
B1	HVO	1.1.2.4	n/a	n/a	MCC 2A, MCC 2B	M	204-1	204-2	268-2	268-1	205-1	269-1	269-2	205-2
B1	HVO	1.1.1.4	MCC 2A; MCC 2B	MCC #3			305-1	359-2	259-1	304-1	304-2	351-1	351-2	
B1	HVO	1.1.1.3	MCC 2A, MCC 2B	MCC #3			349-1	349-2						
B1	HVO	1.1.1.2	MCC 2A; MCC 2B	MCC #3			347-1	347-2	346-1	346-2				
B1	HVO	8.2.5.E	MCC 2A, MCC 2B	MCC #3			335-1	363-3						
B1	HVO	8.2.6.E	MCC 2A, MCC 2B	MCC #3			316-3	343-1						
B1	HVO	6.1	n/a	n/a	MCC #3		329-1	329-2						
B1	HVO	8.2.6.E	MCC #3	SWGR 38			316-3	343-1						
B1	HVO	8.2.5.E	MCC #3	SWGR 38			335-1	363-3						
B1	HVO	1.1.1.2	MCC #3	SWGR 38			347-1	347-2	346-1	346-2				
B1	HVO	1.1.1.3	MCC #3	SWGR 38			349-1	349-2						
B1	HVO	1.1.1.4	n/a	n/a	SWGR 38	M	305-1	359-2	259-1	304-1	304-2	351-1	351-2	305-3
B1	HVO	1.1.1.4	n/a	n/a	SWGR 38	M	360-3							
B1	HVO	1.1.1.3	n/a	n/a	Bus 33-1	M	349-1	349-2	357-2	350-3	328-1	328-2	328-3	358-2
B1	U1 EA	8.2.5.A	Bus 25	MCC 38-2 MCC 38-3	Start at SSD equip cart at Bus 25, North of AEER		239-1	243-1	243-2	244-1	244-2			
B1	U1 EA	8.2.5.C	Bus 25	MCC 38-2 MCC 38-3			245A-2	245-1	245-2	212-1	341-1	341-2		
B1	U1 EA	8.2.5.E	Bus 25	MCC 38-2 MCC 38-3			335-2	314-1						
B1	U1 EA	8.2.6.E	na	na	MCC 38-2 MCC 38-3		316-3	316-1						
B1	U1 EA	8.2.5.E	MCC 38-2 MCC 38-3	2/3-0301-162 & 2/3-0301-163			314-1	335-2						
B1	U1 EA	8.2.5.C	MCC 38-2 MCC 38-3	2/3-0301-162 & 2/3-0301-163			341-1	341-2	212-2	242A-1	242A-2			
B1	U1 EA	8.2.6.C	n/a	n/a	2/3-0301-162 & 2/3-0301-163	M	214A-1	214A-2						
B1	U1 EA	8.2.8	2/3-0301-162 & 2/3-0301-163	MO 2-1201-2 & MO 2-1201-3			256-1	256-2	267-2	267-1				
B1	U1 EA	1.1.2.4	n/a	n/a	RWCU Pipe Chase, MO 2-1201-2 & MO 2-1201-3	M	204-2	204-1	268-2	268-1	299-1	299-2		
B1	U1 EA	8.2.5.C	n/a	n/a	Alt RWCU Isolation (Starts from 2/3-0301-162 & 2/3-0301-163	M	212-1	212-2	212-3					
B1	U1 EA	8.2.5.C	n/a	n/a	2/3-3999-348, 3-3999-359	M	242A-1	T-ALT #2	455-1	455-2				
B1	U1 EA	8.2.2.B	n/a	n/a	U3 CRD Pump Room Valves (8)		332A-1	332A-2	332-2	332-1	331-1			

AccessEgress Paths

SSD Path	Operator	Fire Zone	from epn	to epn	EPN Description	Manual Operation	Light # 1	Light # 2	Light # 3	Light # 4	Light # 5	Light # 6	Light # 7	Light # 8
B1	U1 EA	8.2.5.C	U3 CRD Pump Room Valves (8)	MCC 35-2			340-1	340-2	213-2	213-1	341-1	341-2		
B1	U1 EA	8.2.5.E	U3 CRD Pump Room Valves (8)	MCC 35-2			368-1	314-1						
B1	U1 EA	8.2.6.E	n/a	n/a	MCC 35-2		316-3	343-1	343-2					
B1	U1 EA	8.2.5.E	MCC 35-2	MO 3-0301-2A			314-1	368-1						
B1	U1 EA	8.2.5.C	MCC 35-2	MO 3-0301-2A			341-2	341-1	213-1	213-2	340-2	340-1		
B1	U1 EA	8.2.2.B	n/a	n/a	MO 3-0301-2A, Panel 2253-76	M	332-1	332-2	331-3					
B1	U1 EA	8.2.5.C	Panel 2253-76	Valve 2-0301-9A or 2-0301-9B			213-1	213-2	340-2	340-1	212-1	238-1		
B1	U1 EA	8.2.5.A	Panel 2253-76	Valve 2-0301-9A or 2-0301-9B			238-2							
B1	U1 EA	1.1.2.2	n/a	n/a	Valve 2-0301-9A or 2-0301-9B		258-1	258-2	201-1	201-2				
B1	U1 EA	8.2.5.A	Valve 2-0301-9A or 2-0301-9B	SW Valves (11)			238-2							
B1	U1 EA	8.2.5.C	Valve 2-0301-9A or 2-0301-9B	SW Valves (11)			238-1	245-1	245-2	212-1				
B1	U1 EA	8.2.6.C	n/a	n/a	SW Valves (11)	M	252-2	252-1	T-ALT #9					
B1	U2 EA	8.2.5.A	Bus 25	MO 2-1301-16	Start at SSD equip cart at Bus 25, North of AEER		239-3	243-1	243-2	244-2	244-1			
B1	U2 EA	8.2.5.C	Bus 25	MO 2-1301-16			238-1	245-1	245-2	212-1	341-1	341-2	335-1	

AccessEgress Paths

SSD Path	Operator	Fire Zone	from epn	to epn	EPN Description	Manual Operation	Light # 1	Light # 2	Light # 3	Light # 4	Light # 5	Light # 6	Light # 7	Light # 8
B1	U2 EA	1 1 1.2	Bus 25	MO 2-1301-16			346-1	346-2	347-1	347-2				
B1	U2 EA	1 1 1.3	Bus 25	MO 2-1301-16			349-1	349-2						
B1	U2 EA	1.1 1 4	Bus 25	MO 2-1301-16			351-1	351-2	304-1	304-2	359-1	359-2	305-1	
B1	U2 EA	1.1.2 4	Bus 25	MO 2-1301-16			270-1	270-2						
B1	U2 EA	1.1.2.5.A	n/a	n/a	U2 ISCO; MO 2-1301-16	M	210-2	210-1	210-3	237-1	237-2	T-ALT#7	237A-1	237A-2
B1	U2 EA	1.1.2.4	MO 2-1301-16	MO 2-1301-3			270-1	270-2						
B1	U2 EA	1 1.2 3	MO 2-1301-16	MO 2-1301-3			265-1	265-2	203-1	203-2	297-2	297-1	298-2	
B1	U2 EA	1 1.2.5.C	n/a	n/a	MO 2-1301-3		279-1	279-2						
B1	U2 EA	1 1 2.5.B	n/a	n/a	MO 2-1301-2	M	280-1	280-2						
B1	U2 EA	1 1 2.5.C	n/a	n/a	MO 2-1301-3		279-1	279-2						
B1	U2 EA	1.1.2.3	MO 2-1301-3	U2 ISCO Sightglass Valves (4)			298-2	297-1	297-2	203-1	203-2	265-1	265-2	
B1	U2 EA	1.1.2.4	MO 2-1301-3	U2 ISCO Sightglass Valves (4)			270-1	270-2						
B1	U2 EA	1.1.2.5.A	n/a	n/a	U2 ISCO Sightglass Valves (4); MO 2-4399-74; MO 2-4102; MO 2-1301-10	M	210-1	210-2	210-3	237-1	237-2			
B1	U3 EA	8.2.5.A	Bus 25	MCC 38-1; MCC 38-4	Start at SSD equip cart at Bus 25, North of AEER		239-3	243-1	243-2	244-1	244-2			
B1	U3 EA	8.2.5.C	Bus 25	MCC 38-1; MCC 38-4			238-1	245-1	245-2	212-1	341-1	341-2	335-1	
B1	U3 EA	1.1.1.2	n/a	n/a	MCC 38-1; MCC 38-4		346-1	346-2	308-1	308-2	330-1	T-ALT #8	309-1	309-2
B1	U3 EA	1.4.1	n/a	n/a	Panel 2203-75		353-3							
B1	Rad Rover	8.2.5.A	Bus 25	Outside/CST Sheds	Start at SSD equip cart at Bus 25, North of AEER		N/A							
B1	Rad Rover	outside	n/a	n/a	CST Sheds 2/3A, 1A, 2/3B		N/A							
B1	Rad Rover	11.3	n/a	n/a	MO 2-3906		273-1	272-1	272-3					
B1	Rad Rover	outside	n/a	n/a	Panel 2223-119 in MUDS Building		N/A							
B1	Rad Rover	9 0.C	n/a	n/a	PI 2/3-4141-4A; 2/3 DFP									
B1	Rad Rover	18 7 2	n/a	n/a	ISCO Makeup Pump room; 2223-126A(B)		400A-1	400A-2	400B-1	400B-2	400C-1	400C-2		
B1	Rad Rover	11.3	n/a	n/a	3A SW Pump, 2/3 DGCWP	M	273-1	272-1	272-3					
B1	OOSS	8.2.5.A	Bus 25	IR 2202-5; IR 2202-6	Start at SSD equip cart at Bus 25, North of AEER		239-2	243-1	243-2	244-2	244-1	238-2		
B1	OOSS	1.1.2 2	Bus 25	IR 2202-5; IR 2202-6			258-1	258-2	259-1	259-2				
B1	OOSS	1 1.2 3	n/a	n/a	IR 2202-5; IR 2202-6	M	263-1	263-2	202-2	T-ALT #10	297-2			
B1	OOSS	1 1.2 2	n/a	n/a	IR 2202-7; IR 2202-8	M	259-1	259-2	278-3					
B	HVO	8.2.5.A	Bus 25	MCC 3A; MCC 3B			239-3	243-1	243-2	244-1	244-2	238-2		
B	HVO	1 1 2.2	Bus 25	MCC 3A; MCC 3B			258-1	258-2	259-1	259-2				
B	HVO	1 1 2 3	Bus 25	MCC 3A; MCC 3B			263-1	263-2	202-2	298-2	297-2	203-2	265-1	265-2
B	HVO	1 1 2 4	Bus 25	MCC 3A; MCC 3B			270-1	270-2						
B	HVO	1.1 1 4	n/a	n/a	MCC 3A; MCC 3B	M	305-1	305-3	327-1	327-2				
B	HVO	1.1.2.4	MCC 3A; MCC 3B	MCC #2			270-1	270-2						
B	HVO	1 1 2.3	MCC 3A; MCC 3B	MCC #2			263-1	263-2	202-2	298-2	297-2	203-2	265-1	265-2
B	HVO	1.1.2.2	MCC 3A; MCC 3B	MCC #2			258-1	258-2	259-1	259-2				
B	HVO	8.2.5 A	MCC 3A; MCC 3B	MCC #2			239-3	243-1	243-2	244-1	244-2	238-2		
B	HVO	8.2.6 A	MCC 3A; MCC 3B	MCC #2			104-1	104-2						
B	HVO	8 2.7	MCC 3A; MCC 3B	MCC #2			247-1	247-2						
B	HVO	7 0.A	n/a	n/a	U2 Battery room, MCC #2		231-1	231-2	T-ALT #1					
B	HVO	8 2 7	MCC #2	SWGR 38			247-1	247-2						
B	HVO	8 2 6.A	MCC #2	SWGR 38			104-1	104-2						
B	HVO	8 2 5.A	MCC #2	SWGR 38			239-3	243-1	243-2	244-1	244-2	238-2		
B	HVO	1 1.2 2	MCC #2	SWGR 38			258-1	258-2	259-1	259-2				
B	HVO	1 1 2.3	MCC #2	SWGR 38			263-1	263-2	202-2	298-2	297-2	203-2	265-1	265-2
B	HVO	1 1 2.4	MCC #2	SWGR 38			270-1	270-2						
B	HVO	1 1 1.4	n/a	n/a	SWGR 38	M	305-1	305-3	360-1	360-3				
B	HVO				Bus 33-1	M	349-1	349-2	357-2	350-3	328-1	328-2	328-3	358-2

AccessEgress Paths

SSD Path	Operator	Fire Zone	from epn	to epn	EPN Description	Manual Operation	Light # 1	Light # 2	Light # 3	Light # 4	Light # 5	Light # 6	Light # 7	Light # 8
B	HVO	1.1.1.3	Bus 33-1	Bus 33			358-2	307-1	307-2					
B	HVO	1.1.2.3	Bus 33-1	Bus 33			203-1	203-2	297-2	298-2	298-1	202-2	263-1	263-2
B	HVO	1.1.2.2	Bus 33-1	Bus 33			259-1	259-2	258-1	258-2				
B	HVO	8.2.5.A	Bus 33-1	Bus 33			238-2							
B	HVO	8.2.5.C	Bus 33-1	Bus 33			238-1	245-1	245-2	212-1				
B	HVO	8.2.5.E	Bus 33-1	Bus 33			341-1	341-2	314-1					
B	HVO	8.2.6.E	n/a	n/a	Bus 33		316-3	343-1	343-2	315-1	315-2			
B	HVO	8.2.5.E	Bus 33	2/3 EDG Fuel Oil Xfer pump			314-1	335-1						
B	HVO	1.1.1.2	Bus 33	2/3 EDG Fuel Oil Xfer pump			346-1	346-2	308-1	308-2	330-1	330-2	309-1	
B	HVO	1.1.2.2	Bus 33	2/3 EDG Fuel Oil Xfer pump			200-1	200-2	293-1	260-1	262-1	262-2		
B	HVO	9.0.C	n/a	n/a	2/3 EDG Fuel Oil Xfer pump	M	287-2	217-1	217-2	276-2	276-3	276-1	277-1	
B	U3 EA	8.2.5.A	Bus 25	MCC 38-3	Start at SSD equip cart at Bus 25, North of AEER		239-3	243-1	243-2	244-1	244-2			
B	U3 EA	8.2.5.C	Bus 25	MCC 38-3			238-1	245-1	245-2	212-1				
B	U3 EA	8.2.5.E	Bus 25	MCC 38-3			341-1	341-2	314-1					
B	U3 EA	8.2.6.E	n/a	n/a	MCC 38-3		316-3	316-1	316-2					
B	U3 EA	8.2.5.E	MCC 38-3	MCC 38-1; MCC 38-4			314-1	335-1						
B	U3 EA	1.1.1.2	n/a	n/a	MCC 38-1; MCC 38-4		346-1	346-2	308-1	308-2	330-1	T-ALT #8	309-2	309-3
B	U3 EA	1.1.2.2	MCC 38-1; MCC 38-4	U2 ISCO Sightglass Valves (4)			200-1	200-2	260-1	264-1	264-2			
B	U3 EA	1.1.2.3	MCC 38-1; MCC 38-4	U2 ISCO Sightglass Valves (4)			265-1	265-2						
B	U3 EA	1.1.2.4	MCC 38-1; MCC 38-4	U2 ISCO Sightglass Valves (4)			370-1	370-2						
B	U3 EA	1.1.2.5.A	n/a	n/a	U2 ISCO Sightglass Valves (4)	M	210-2	210-3	237-1	237-2	237A-2	T-Alt#7		
B	U3 EA	1.1.2.5.A	U2 ISCO Sightglass Valves (4)	Valve 3-0301-9A or 3-0301-9B			237-1	237-2	210-1	210-2	210-3			
B	U3 EA	1.1.2.4	U2 ISCO Sightglass Valves (4)	Valve 3-0301-9A or 3-0301-9B			270-1	270-2						
B	U3 EA	1.1.2.3	U2 ISCO Sightglass Valves (4)	Valve 3-0301-9A or 3-0301-9B			265-1	265-2						
B	U3 EA	1.1.2.2	U2 ISCO Sightglass Valves (4)	Valve 3-0301-9A or 3-0301-9B			264-1	264-2	260-1	200-1	200-2			
B	U3 EA	1.1.1.2	n/a	n/a	Valve 3-0301-9A or 3-0301-9B		309-1	330-1	348-1	308-1				
B	U1 EA	8.2.5.A	Bus 25	MO 3-1201-2 & MO 3-1201-3	Start at SSD equip cart at Bus 25, North of AEER		239-3	243-1	243-2	244-1	244-2	238-2		
B	U1 EA	1.1.2.2	Bus 25	MO 3-1201-2 & MO 3-1201-3			258-1	258-2	259-1	259-2				
B	U1 EA	1.1.2.3	Bus 25	MO 3-1201-2 & MO 3-1201-3			263-1	263-2						
B	U1 EA	1.1.2.4	Bus 25	MO 3-1201-2 & MO 3-1201-3			266-1	266-2	204-1	204-2	268-2	268-1	205-1	205-2
B	U1 EA	1.1.1.4	n/a	n/a	RWCU Pipe Chase, MO 3-1201-2 & MO 3-1201-3	M	305-1	359-2	352-1	352-2				
B	U1 EA	8.2.5.A	Bus 25	Alternative RWCU Isolation zone			239-3	243-1	243-2	244-1	244-2			
B	U1 EA	8.2.5.C	n/a	n/a	Alternative RWCU Isolation zone		238-1	245-1	245-2	212-1	212-2	212-3		
B	U1 EA	8.2.5.C	n/a	n/a	2/3-3999-348 Valve	M	213-1	213-2	T ALT #2					
B	U1 EA	8.2.2.B	n/a	n/a	U3 CRD Pump Room Valves (8)		322A-1	322A-2	332-1	332-2				
B	U1 EA	8.2.5.C	U3 CRD Pump Room Valves (8)	MCC 35-2			241-1	241-2	213-1	213-2	341-1	341-2		
B	U1 EA	8.2.5.E	U3 CRD Pump Room Valves (8)	MCC 35-2			314-1	368-1						
B	U1 EA	8.2.6.E	n/a	n/a	MCC 35-2		316-3	343-1	343-2					
B	U1 EA	8.2.5.E	MCC 35-2	MO 3-0301-2A			341-1	368-1						
							341-1	341-2	212-2	213-1	213-2	340-1	340-2	

AccessEgress Paths

SSD Path	Operator	Fire Zone	from epn	to epn	EPN Description	Manual Operation	Light # 1	Light # 2	Light # 3	Light # 4	Light # 5	Light # 6	Light # 7	Light # 8
B	U1 EA	8.2.2.B	n/a	n/a	MO 3-0301-2A	M	332A-2	332-2	332-1	331-3				
B	U1 EA	8.2.5.C	MO 3-0301-2A	Verify SW Valves (11)			340-2	340-1	242A-1	242A-2				
B	U1 EA	8.2.6.C	n/a	n/a	Verify SW Valves (11)	M	214-1	214-2	214-3	T ALT #5				
B	OOSS	8.2.5.A	Bus 25	IR 2203-5; IR 2203-6	Start at SSD equip cart at Bus 25, North of AEER		239-3	243-1	243-2	244-1	244-2	238-2		
B	OOSS	1.1.2.2	Bus 25	IR 2203-5; IR 2203-6			258-1	258-2	201-1	201-2	261-1	261-2	264-1	264-2
B	OOSS	1.1.2.3	Bus 25	IR 2203-5; IR 2203-6			265-1	265-2						
B	OOSS	1.1.1.3	n/a	n/a	IR 2203-5; IR 2203-6	M	307-1	307-2	358-2	350-3	306-1	306-2	357-1	358-1
B	OOSS	1.1.1.2	n/a	n/a	IR 2203-7; IR 2203-8	M	347-1	347-2	308-1	308-2	330-1	309-1	369-1	369-2
B	OOSS	1.1.2.2	IR 2203-7; IR 2203-8	2/3 DG			200-1	200-2	260-1	262-1	262-2			
B	OOSS	9.0.C	n/a	n/a	2/3 DG controls	M	287-2	217-1	217-2	277-1	277-2	276-1	276-3	
B	Rad Rover	8.2.5.A	Bus 25	Outside/Panel 2223-119	Start at SSD equip cart at Bus 25, North of AEER		N/A							
B	Rad Rover	outside	n/a	n/a	Panel 2223-119 in MUDS building		N/A							
B	Rad Rover	11.3	n/a	n/a	Cribhouse: MO 2-3906; PI 2/3-4141-4A; 2/3 DFP		273-1	272-1	272-2	272-3	337-2			
B	Rad Rover	outside	n/a	n/a	2/3A CST Shed; 1A CST Shed; 2/3B CST Shed		N/A							
B	Rad Rover	18.7.2	n/a	n/a	ISCO makeup pump rooms		400 \-	400A-2	400B-1	400B-2	400C-1	400C-2		
B	Rad Rover	9.0.C	n/a	n/a	2/3 Diesel Oil Xfer Pump	M	262 1	262-2	287-2	217-1	217-2	277-1	276-3	276-1
B	Rad Rover	11.3	n/a	n/a	Cribhouse: SW Pump; DGCWP	M	273-1	272-1	272-2	272-3				

AccessEgress Paths

SSD Path	Operator	Fire Zone	from epn	to epn	EPN Description	Manual Operation	Light # 1	Light # 2	Light # 3	Light # 4	Light # 5	Light # 6	Light # 7	Light # 8
A1	U3 NSO	2.0	n/a	n/a	Controls procedure from control room		216-1	216-2	216A-1	219A-2	311-1	311-2	311A-1	311A-2
A1	U2 NSO	2.0	n/a	n/a	Controls procedure from control room		216-1	216-2	216A-1	219A-2	311-1	311-2	311A-1	311A-2
A1	U2 AUX NSO	8.2.5.A	Bus 25	Panel 2203-76	Start at SSD equip cart at Bus 25, North of AEER		239-3	243-1	243-2	244-1	244-2	238-2		
A1	U2 AUX NSO	1.1.2.2	Bus 25	Panel 2203-76			258-1	258-2	201-1	201-2	261-1	261-2	262-1	262-2
A1	U2 AUX NSO	9.0.C	n/a	n/a	Panel 2203-76, 2/3 DG Controls		287-1							
A1	HVO	8.2.5.A	Bus 25	Bus 2A-1; Bus 2A	Start at SSD equip cart at Bus 25, North of AEER		239-1							
A1	HVO	8.2.6.A	Bus 25	Bus 2A-1; Bus 2A			104-1	104-2						
A1	HVO	8.2.7	Bus 25	Bus 2A-1; Bus 2A			247-1	247-2						
A1	HVO	7.0.A	n/a	n/a	U2 Battery Charger Room; Bus 2A-1; Bus 2A	M	231-1	231A-1	231A-2					
A1	HVO	8.2.7	Bus 2A-1; Bus 2A	MCC 3A; MCC 3B			247-1	247-2						
A1	HVO	8.2.6.A	Bus 2A-1; Bus 2A	MCC 3A; MCC 3B			104-1	104-2						
A1	HVO	8.2.5.A	Bus 2A-1; Bus 2A	MCC 3A; MCC 3B			239-2	243-1	243-2	244-1	244-2			
A1	HVO	8.2.5.C	Bus 2A-1; Bus 2A	MCC 3A; MCC 3B			245A-1	245-1	245-2	212-1	341-1	341-2		
A1	HVO	8.2.5.E	Bus 2A-1; Bus 2A	MCC 3A; MCC 3B			368-1	314-1						
A1	HVO	8.2.6.E	Bus 2A-1; Bus 2A	MCC 3A; MCC 3B			316-3	343-1						
A1	HVO	6.1	n/a	n/a	U3 Battery Charger room; MCC 3A; MCC 3B		329-1	329-2						
A1	HVO	8.2.6.E	Bus 2A-1; Bus 2A	Panel 2203-32			343-1	316-3						
A1	HVO	8.2.5.E	Bus 2A-1; Bus 2A	Panel 2203-32			314-1	335-1						
A1	HVO	1.1.1.2	Bus 2A-1; Bus 2A	Panel 2203-32			346-1	346-2	347-1	347-2				
A1	HVO	1.1.1.3	n/a	n/a	Panel 2203-32 @ IR 2203-5		349-1	357-2	357-1	306-2				
A1	HVO	1.1.1.2	Panel 2203-32	MCC 3A; MCC 3B	HVO Starts from Panel 2203-32		356-1	356-2	308-1	308-2	347-1	347-2		
A1	HVO	1.1.1.3	Panel 2203-32	MCC 3A; MCC 3B			349-1	349-2						
A1	HVO	1.1.1.4	n/a	n/a	MCC 3A; MCC 3B	M	351-1	351-2	304-1	304-2	359-1	359-2	327-1	327-2
A1	HVO	1.1.1.2	n/a	n/a	MCC 3A; MCC 3B Starts from same panel Alt route from Step Attachment D Step 2A/2B		356-1	356-1	208-1	208-2	346-1	346-2		
A1	HVO	8.2.5.E	n/a	n/a			335-1	368-1						
A1	HVO	8.2.5.C	n/a	n/a			341-1	341-2	212-1	245-1	245-2	238-1		
A1	HVO	8.2.5.A	n/a	n/a			244-1	244-2	243-1	243-2	239-2			
A1	HVO	8.2.6.A	n/a	n/a			104-1	104-2						
A1	HVO	8.2.7	n/a	n/a			347-1	347-2						
A1	HVO	7.0.A	n/a	n/a	MCC #2 if RB 3 is inaccessable		231-1	231-2	T ALT #1					
A1	HVO	1.1.2.4	n/a	n/a	SWGR 28	M	205-2	205-3	229-1	229-2				
A1	HVO	1.1.2.3	n/a	n/a	Bus 23-1	M	265-1	265-2	203-1	203-2	297-1	230-1	230-2	298-3
A1	HVO	1.1.2.2	Bus 23-1	2/3 EDG Fuel Oil Xfer Pump			264-1	264-2	262-1	262-2				
A1	HVO	9.0.C	n/a	n/a	2/3 EDG Fuel Oil Xfer Pump	M	287-2	217-1	217-2	276-2	276-3	276-1	277-1	
A1	U1 EA	8.2.5.A	Bus 25	MCC 28-2; MCC 28-3	Start at SSD equip cart at Bus 25, North of AEER		239-2							
A1	U1 EA	8.2.6.A	Bus 25	MCC 28-2; MCC 28-3			248-1	248-2	249-1	251-2	240-2	104-1	104-2	
A1	U1 EA	8.2.6.A	n/a	n/a	MCC 28-2; MCC 28-3		240-1	240-2						
A1	U1 EA	8.2.6.C	n/a	n/a	CRD Cross-tie valves: 2/3-0301-162 & 2/3-0301-163	M	214A-1	214A-2						
A1	U1 EA	8.2.5.C	2/3-0301-162 & 2/3-0301-163	MO 3-1201-2 & MO 3-1201-3			242A-1	242A-2	213-1	213-2	341-1	341-2	335-1	
A1	U1 EA	1.1.1.2	2/3-0301-162 & 2/3-0301-163	MO 3-1201-2 & MO 3-1201-3			346-1	346-2	347-1	347-2				
A1	U1 EA	1.1.1.3	2/3-0301-162 & 2/3-0301-163	MO 3-1201-2 & MO 3-1201-3			349-1	349-2						
A1	U1 EA	1.1.1.4	n/a	n/a	RWCU pipe chase: MO 3-1201-2 & MO 3-1201-3	M	351-1	351-2	304-1	304-2	359-1	359-2	352-1	352-2
A1	U1 EA	8.2.5.C	n/a	n/a	Alternative RWCU Isolation zone		242A-1	242A-2	213-1	213-2	212-2	212-3		
A1	U1 EA	8.2.5.C	n/a	n/a	2-3999-359 & 2/3-3999-348 valves		T ALT #2	T ALT #3	213-1	213-2				
A1	U1 EA	8.2.2.A	n/a	n/a	U3 CRD Pump Room Valves (8)		233A-1	233A-2						
				MCC 25-2			241-1	213-1	213-2	212-1	212-2	245-1	245-2	

AccessEgress Paths

SSD Path	Operator	Fire Zone	from epn	to epn	EPN Description	Manual Operation	Light # 1	Light # 2	Light # 3	Light # 4	Light # 5	Light # 6	Light # 7	Light # 8
A1	U1 EA	8.2.5.A	n/a	n/a	MCC 25-2		244-1	244-2	243-1	243-2				
A1	U1 EA	8.2.5.C	MCC 25-2	MO 2-0301-2A			245-1	245-2	212-1	212-2	213-1	213-2	241-1	
A1	U1 EA	8.2.2.A	n/a	n/a	MO 2-0301-2A; Panel 2252-76	M	241-2	233A-1	233-1	233-2	234-1			
A1	U1 EA	8.2.5.C	Panel 2252-76	Valve 3-0301-9A or 3-0301-9B			241-1	213-1	213-2	245-1	245-2			
A1	U1 EA	8.2.5.A	Panel 2252-76	Valve 3-0301-9A or 3-0301-9B			238-2							
A1	U1 EA	1.1.2.2	Panel 2252-76	Valve 3-0301-9A or 3-0301-9B			258-1	258-2	201-1	201-2	261-1	261-2	200-1	200-2
A1	U1 EA	1.1.1.2	n/a	n/a	Valve 3-0301-9A or 3-0301-9B		309-1	330-1	348-1	348-2	308-1			
A1	U1 EA	8.2.5.E	Valve 3-0301-9A or 3-0301-9B	SW Valves (11)			335-1							
A1	U1 EA	8.2.5.C	Valve 3-0301-9A or 3-0301-9B	SW Valves (11)			341-1	341-2	213-1	213-2	242A-1	242A-2		
A1	U1 EA	8.2.6.C	n/a	n/a	SW Valves (11)	M	214-2	214-3	T ALT #5					
A1	U3 EA	8.2.5.A	Bus 25	MO 3-1301-16	Start at SSD equip cart at Bus 25, North of AEER		239-3	243-1	243-2	244-1	244-2	238-2		
A1	U3 EA	1.1.2.2	Bus 25	MO 3-1301-16			258-1	258-2	259-1	259-2				
A1	U3 EA	1.1.2.3	Bus 25	MO 3-1301-16			263-1	263-2						
A1	U3 EA	1.1.2.4	Bus 25	MO 3-1301-16			266-1	266-2	204-1	204-2	268-1	268-2	270-2	205-2
A1	U3 EA	1.1.2.5.A	Bus 25	MO 3-1301-16			210-2							
A1	U3 EA	1.1.1.5.A	n/a	n/a	U3 ISCO: MO 3-1301-16	M	303-1	303-2	361-1	361-2				
A1	U3 EA	1.1.2.5.A	MO 3-1301-16	MO 3-1301-3			210-2							
A1	U3 EA	1.1.2.4	MO 3-1301-16	MO 3-1301-3			270-1	270-2						
A1	U3 EA	1.1.2.3	MO 3-1301-16	MO 3-1301-3			265-1	265-2						
A1	U3 EA	1.1.1.3	MO 3-1301-16	MO 3-1301-3			307-1	307-2	358-2	328-3				
A1	U3 EA	1.1.1.5.C	n/a	n/a	MO 3-1301-3		354-1	354-2						
A1	U3 EA	1.1.1.5.B	n/a	n/a	MO 3-1301-2	M	355-1	355-2						
A1	U3 EA	1.1.1.5.C	n/a	n/a	MO 3-1301-3	M	345-1	354-2						
A1	U3 EA	1.1.1.3	MO 3-1301-3	U3 ISCO Sightglass Valves (4)			307-1	307-2	358-2	328-3				
A1	U3 EA	1.1.2.3	MO 3-1301-3	U3 ISCO Sightglass Valves (4)			265-1	265-2						
A1	U3 EA	1.1.2.4	MO 3-1301-3	U3 ISCO Sightglass Valves (4)			270-1	270-2						
A1	U3 EA	1.1.2.5.A	MO 3-1301-3	U3 ISCO Sightglass Valves (4)			210-2							
A1	U3 EA	1.1.1.5.A	n/a	n/a	U3 ISCO Sightglass Valves (4); MO 3-4102, MO 3-1301-10	M	303-1	303-2	361-1	361-2	362-1			
A1	U2 EA	8.2.5.A	Bus 25	MCC 28-1	Start at SSD equip cart at Bus 25, North of AEER		239-3	243-1	243-2	244-1	244-2	238-2		
A1	U2 EA	1.1.2.2	n/a	n/a	MCC 28-1		258-1	258-2	201-1	201-2	295-2	261-1		
A1	U2 EA	1.3.2	n/a	n/a	Panel 2202-75		201-1	201-2	278-1	278-2				
		1.1.2.2	Panel 2202-75	U3 HPCI			278-2	201-1	201-2	261-1	261-2	262-1	262-2	
A1	U2 EA	9.0.C	Panel 2202-75	U3 HPCI			287-2	217-1	217-2	288-2				
A1	U2 EA	11.1.3	n/a	n/a	U3 HPCI Manual Trip Lever	M	291-1	291-2						
A1	Rad Rover	8.2.5.A	Bus 25	Outside/Panel 2223-119	Start at SSD equip cart at Bus 25, North of AEER		N/A							
A1	Rad Rover	outside	n/a	n/a	MUDS Building, Panel 2223-119		N/A							
A1	Rad Rover	11.3	n/a	n/a	Cribhouse: MO 2-3906; PI 2/3-4141-4A		273-1	272-1	272-3					
A1	Rad Rover	outside	n/a	n/a	2/3A CST Shed; 2/3B CST Shed		N/A							
A1	Rad Rover	18.7.2	n/a	n/a	ISCO Makeup Pump Room		400A-1	400A-2	400B-1	400B-2	400C-1	400C-2		
A1	Rad Rover	9.0.C	n/a	n/a	2/3 Diesel Oil Xfer Pump	M	262-1	262-2	287-2	217-1	217-2	277-1	276-3	276-1
A1	Rad Rover	11.3	n/a	n/a	Cribhouse: SW Pump, DGCWP	M	273-1	272-1	272-3					
A1	OOSS	8.2.5.A	Bus 25	IR 2203-5, IR 2203-6	Start at SSD equip cart at Bus 25, North of AEER		239-3	243-1	243-2	244-1	244-2	238-2		
A1	OOSS	1.1.2.2	Bus 25	IR 2203-5, IR 2203-6			258-1	258-2	201-1	201-2	261-1	261-2	200-1	200-2
A1	OOSS	1.1.1.2	Bus 25	IR 2203-5, IR 2203-6			309-1	330-1	308-1	308-2	347-1	347-2		
A1	OOSS	1.1.1.3	n/a	n/a	IR 2203-5; IR 2203-6	M	349-1	349-2	357-2	306-1	306-2	350-3	358-1	
A1	OOSS	1.1.1.2	n/a	n/a	IR 2203-7; IR 2203-8	M	347-1	347-2	308-1	308-2	356-2	330-1	352-1	369-1

AccessEgress Paths

SSD Path	Operator	Fire Zone	from epn	to epn	EPN Description	Manual Operation	Light # 1	Light # 2	Light # 3	Light # 4	Light # 5	Light # 6	Light # 7	Light # 8
C	U2 NSO	2 0	n/a	n/a	Controls procedure from control room		216-1	216-2	216A-1	216A-2	311-1	311-2	311A-1	311A-2
C	OOSS	8 2 5.A	Bus 25	MCC 2A; MCC 2B	Start at SSD equip cart at Bus 25, North of AEER		239-3	243-1	243-2	244-1	244-2	238-2		
C	OOSS	1.1.2.2	Bus 25	MCC 2A; MCC 2B			258-1	258-2	259-1	259-2				
C	OOSS	1.1.2.3	Bus 25	MCC 2A; MCC 2B			263-1	263-2						
C	OOSS	1.1.2.4	n/a	n/a	MCC 2A; MCC 2B	M	266-1	266-2	204-1	204-2	268-1	268-2	269-1	269-2
C	OOSS	1.1 2.3	MCC 2A; MCC 2B	Bus 2A-1; Bus 2B-1			263-1	263-2						
C	OOSS	1.1.2.2	MCC 2A; MCC 2B	Bus 2A-1; Bus 2B-1			259-1	259-2	258-1	258-2				
C	OOSS	8 2 5 A	MCC 2A; MCC 2B	Bus 2A-1; Bus 2B-1			238-2	244-1	244-2	243-1	243-2	238-1		
C	OOSS	8.2 6 A	MCC 2A; MCC 2B	Bus 2A-1; Bus 2B-1			104-1	104-2						
C	OOSS	8.2.7	MCC 2A; MCC 2B	Bus 2A-1; Bus 2B-1			247-1	247-2						
C	OOSS	7.0 A	n/a	n/a	Bus 2A-1; Bus 2B-1	M	231-1	231-2	T ALT #1					
C	OOSS	8.2.7	Bus 2A-1; Bus 2B-1	MCC #3			247-1	247-2						
C	OOSS	8.2 6.A	Bus 2A-1; Bus 2B-1	MCC #3			104-1	104-2						
C	OOSS	8.2.5.A	Bus 2A-1; Bus 2B-1	MCC #3			239-1	243-1	243-2	244-1	244-2			
C	OOSS	8.2.5.C	Bus 2A-1; Bus 2B-1	MCC #3			245-1	245-2	212-1	341-1				
C	OOSS	8 2 5.E	Bus 2A-1; Bus 2B-1	MCC #3			341-1	341-2						
C	OOSS	8.2 6.E	Bus 2A-1; Bus 2B-1	MCC #3			316-3	343-1						
C	OOSS	6 1	n/a	n/a	MCC #3		329-1	329-2						
C	OOSS	8.2 6.E	MCC #3	SWGR 29; SWGR 28			343-1	316-3						
C	OOSS	8.2.5.E	MCC #3	SWGR 29; SWGR 28			314-1	335-1						
C	OOSS	1.1.1.2	MCC #3	SWGR 29; SWGR 28			346-1	346-2	347-1	347-2				
C	OOSS	1 1 1.3	MCC #3	SWGR 29; SWGR 28			349-1	349-2						
C	OOSS	1.1.1 4	MCC #3	SWGR 29; SWGR 28			351-1	351-2	304-1	304-2	359-1	359-2	305-1	
C	OOSS	1.1 2 4	n/a	n/a	SWGR 29; SWGR 28		205-2	229-1	229-2	229-3				
C	OOSS	1.1 2.3	n/a	n/a	Bus 24-1		265-1	265-2	203-1	297-1	231-1	231-2	298-3	
C	U2 EA	8.2 5.A	Bus 25	MCC 29-1, MCC 29-4, MCC 29-7, MCC 28-7	Start at SSD equip cart at Bus 25, North of AEER		239-3	243-1	243-2	244-1	244-2	238-2		
C	U2 EA	1.1 2 2	n/a	n/a	MCC 29-1, MCC 29-4, MCC 29-7, MCC 28-7		258-1	258-2	201-1	201-2	232-2	232-1	200-1	292-1
C	U2 EA	1.1.2.2	n/a	n/a	MCC 29-1, MCC 29-4, MCC 29-7, MCC 28-7		258-1	258-2	201-1	201-2	232-2	232-1	200-1	292-1
C	U2 EA	11.1.2	n/a	n/a	LPCI Room		333A-1	333A-2						
C	U2 EA	1.1 2.1	n/a	n/a	Torus Area		N/A							
C	HVO	8.2.5.A	Bus 25	MCC 29-2	Start at SSD equip cart at Bus 25, North of AEER		239-3	239-1						
C	HVO	8.2 5 A	n/a	n/a	MCC 29-2	M	239-3	239-1						
C	HVO	8.2.6.C	n/a	n/a	MCC 29-9		T ALT #9							
C	HVO	8.2 6.C	MCC 29-9	MO 2-1201-2 & MO 2-1201-3			T ALT #9							
C	HVO	8.2 5.C	MCC 29-9	MO 2-1201-2 & MO 2-1201-3			242A-1	242A-2	212-1	212-2	245-1	245-2		
C	HVO	8.2 5.A	MCC 29-9	MO 2-1201-2 & MO 2-1201-3			238-2							
C	HVO	1.1.2 2	MCC 29-9	MO 2-1201-2 & MO 2-1201-3			258-1	258-2	259-1	259-2				
C	HVO	1.1.2.3	MCC 29-9	MO 2-1201-2 & MO 2-1201-3			263-1	263-2						
C	HVO	1.1 2 4	n/a	n/a	RWCU Pipe Chase: MO 2-1201-2 & MO 2-1201-3	M	266-1	266-2	204-1	204-2	268-2	299-1	299-2	268-1
C	HVO	8.2 5.C	n/a	n/a	Alt RWCU Isolation		242A-1	242A-2	213-1	213-2				
			Alt RWCU				243-1	243-2	244-2					

AccessEgress Paths

SSD Path	Operator	Fire Zone	from epn	to epn	EPN Description	Manual Operation	Light # 1	Light # 2	Light # 3	Light # 4	Light # 5	Light # 6	Light # 7	Light # 8
C	HVO	9.0 A	n/a	n/a	U2 DG		208A-1	208A-2	208A-3	209-1	209-2			
C	U3 AUX NSO	8.2.5 A	Bus 25	Bus 24	Start at SSD equip cart at Bus 25, North of AEER		239-3							
C	U3 AUX NSO	8.2.6 A	n/a	n/a	Bus 24		248-1	248-2	249-2	104-1	104-2			
C	U3 AUX NSO	8.2.5 A	Bus 24	IR 2202-5; IR 2202-6			104-1	104-2	239-2	243-1	243-2	244-1	244-2	238-2
C	U3 AUX NSO	1.1.2.2	Bus 24	IR 2202-5; IR 2202-6			258-1	258-2	259-1	259-2				
C	U3 AUX NSO	1.1.2.3	n/a	n/a	IR 2202-5, IR 2202-6	M	263-1	263-2	202-1	202-2	298-2	297-2	T-Alt#10	
C	U3 AUX NSO	1.1.2.2	n/a	n/a	IR 2202-7, IR 2202-8	M	259-1	259-2	278-3	201-1	201-2	261-2	293-1	293-2

AccessEgress Paths

SSD Path	Operator	Fire Zone	from epn	to epn	EPN Description	Manual Operation	Light # 1	Light # 2	Light # 3	Light # 4	Light # 5	Light # 6	Light # 7	Light # 8
D	U3 NSO	2.0	n/a	n/a	Controls procedure from control room		216-1	216-2	216A-1	216A-2	311-1	311-2	311A-1	311A-2
D	OOSS	8.2.5.A	Bus 25	MCC 3A; MCC 3B	Start at SSD equip cart at Bus 25, North of AEER		239-3	243-1	243-2	244-1	244-2	238-2		
D	OOSS	1.1.2.2	Bus 25	MCC 3A; MCC 3B			258-1	258-2	259-1	259-2				
D	OOSS	1.1.2.3	Bus 25	MCC 3A; MCC 3B			263-1	263-2						
D	OOSS	1.1.2.4	Bus 25	MCC 3A; MCC 3B			266-1	266-2	204-1	204-2	268-1	268-2	205-1	205-2
D	OOSS	1.1.1.4	n/a	n/a	MCC 3A; MCC 3B	M	305-1	305-3	327-1	327-2				
D	OOSS	1.1.1.3	MCC 3A; MCC 3B	Bus 3B-1			349-1	349-2						
D	OOSS	1.1.1.2	MCC 3A; MCC 3B	Bus 3B-1			347-1	347-2	346-1	346-2				
D	OOSS	8.2.5.E	MCC 3A; MCC 3B	Bus 3B-1			335-1	314-1						
D	OOSS	8.2.6.E	MCC 3A; MCC 3B	Bus 3B-1			316-3	343-1						
D	OOSS	6.1	n/a	n/a	Bus 3B-1	M	329-1	329-2						
D	OOSS	1.1.1.3	n/a	n/a	Panel 2203-32 @ IR 2203-5 (as alternative)		349-1	349-2	357-2	350-3	358-2	358-1		
D	OOSS	1.1.2.3	Panel 2203-32	SWGR 39; SWGR 38			203-1	265-1	265-2					
D	OOSS	1.1.2.4	Panel 2203-32	SWGR 39; SWGR 38			270-1	270-2						
D	OOSS	1.1.1.4	n/a	n/a	SWGR 39; SWGR 38	M	360-1	360-2	360-3	305-1	305-3			
D	OOSS	1.1.2.4	SWGR 39; SWGR 38	MCC #2			270-1	270-2						
D	OOSS	1.1.2.3	SWGR 39; SWGR 38	MCC #2			265-1	265-2						
D	OOSS	1.1.2.2	SWGR 39; SWGR 38	MCC #2			264-1	264-2	261-2	261-1	201-1	258-1	258-2	
D	OOSS	8.2.5.A	SWGR 39; SWGR 38	MCC #2			238-2	244-1	244-2	243-1	243-2	239-2		
D	OOSS	8.2.6.A	SWGR 39; SWGR 38	MCC #2			104-1	104-2						
D	OOSS	8.2.7	SWGR 39; SWGR 38	MCC #2			247-1	247-2						
D	OOSS	7.0.A	n/a	n/a	U2 Battery Room, MCC #2		231-1	231-2	T-ALT#1					
D	OOSS	8.2.7	MCC #2	Bus 34-1			247-1	247-2						
D	OOSS	8.2.6.A	MCC #2	Bus 34-1			104-1	104-2						
D	OOSS	8.2.5.A	MCC #2	Bus 34-1			238-2	244-1	244-2	243-1	243-2	239-2		
D	OOSS	1.1.2.2	MCC #2	Bus 34-1			258-1	258-2	259-1	259-2				
D	OOSS	1.1.2.3	MCC #2	Bus 34-1			263-1	263-2	202-1	202-2	298-1	298-2	203-1	203-2
D	OOSS	1.1.1.3	n/a	n/a	Bus 34-1 (Note: DSSP states at TBX)		307-1	307-2	358-2	350-1	350-2			
D	U3 EA	8.2.5.A	Bus 25	MCC 39-1; MCC 39-7; MCCC 38-7	Start at SSD equip cart at Bus 25, North of AEER		239-2	243-1	243-2	244-1	244-2			
D	U3 EA	8.2.5.C	Bus 25	MCC 39-1; MCC 39-7; MCCC 38-7			245-1	245-2	212-1	341-1	341-2			
D	U3 EA	8.2.5.E	Bus 25	MCC 39-1; MCC 39-7; MCCC 38-7			335-1							
D	U3 EA	1.1.1.2	n/a	n/a	MCC 39-1, MCC 39-7, MCCC 38-7		346-1	346-2	308-1	308-2	348-1	348-2	330-1	330-2
D	U3 EA	11.1.1	n/a	n/a	LPCI Southwest Corner Room		333A-1	333A-2	333-1	333-2				
D	U3 EA	1.1.1.1	n/a	n/a	Torus Area		N/A							
D	HVO	8.2.5.A	Bus 25	MCC 39-2	Start at SSD equip cart at Bus 25, North of AEER		239-2	243-1	4243-2	244-1	244-2			
D	HVO	8.2.5.C	Bus 25	MCC 39-2			245-1	245-2	212-1	213-1	244A-1	244A-2		
D	HVO	8.2.6.C	n/a	n/a	MCC 39-2	M	214-1	214-3	215-2					
D	HVO	8.2.8	MCC 39-2	MO 3-1201-2 & 3-1201-3			256-1	256-2	267-1	267-2				
D	HVO	1.1.2.4	MCC 39-2	MO 3-1201-2 & 3-1201-3			204-1	204-2	268-1	268-2	205-2	205-1		
D	HVO	1.1.1.4	n/a	n/a	RWCU Pipe Chase: MO 3-1201-2 & 3-1201-3	M	305-1	359-2	352-1	352-2				
D	HVO	8.2.5.C	n/a	n/a	Alt RWCU Isolation		242A-1	242A-2	213-1	213-2	212-2	212-3		
D	HVO	8.2.5.E	Alt RWCU Isolation	U3 DG			341-1	341-2	314-1					
							363-1	363-2	313-1	313-2				

AccessEgress Paths

SSD Path	Operator	Fire Zone	from epn	to epn	EPN Description	Manual Operation	Light # 1	Light # 2	Light # 3	Light # 4	Light # 5	Light # 6	Light # 7	Light # 8
D	U2 AUX NSO	8.2.5.A	Bus 25	Bus 34	Start at SSD equip cart at Bus 25, North of AEER		239-2	243-1	243-2	244-1	244-2			
D	U2 AUX NSO	8.2.5.C	Bus 25	Bus 34			245-1	245-2	212-1	341-1	341-2			
D	U2 AUX NSO	8.2.5.E	Bus 25	Bus 34			314-1							
D	U2 AUX NSO	8.2.6.E	n/a	n/a	Bus 34		316-3	343-1	343-2	342-1	342-2			
D	U2 AUX NSO	8.2.5.E	Bus 34	IR 2203-5; IR 2203-6			314-1	335-1						
D	U2 AUX NSO	1.1.1.2	Bus 34	IR 2203-5; IR 2203-6			346-1	346-2	347-1	347-2				
D	U2 AUX NSO	1.1.1.3	n/a	n/a	IR 2203-5, IR 2203-6	M	349-1	349-2	357-2	306-1	306-2	358-1	358-2	
D	U2 AUX NSO	1.1.1.2	n/a	n/a	IR 2203-7, IR 2203-8	M	347-1	347-2	308-1	308-2	356-2	330-1	309-1	369-1

AccessEgress Paths

SSD Path	Operator	Fire Zone	from epn	to epn	EPN Description	Manual Operation	Light # 1	Light # 2	Light # 3	Light # 4	Light # 5	Light # 6	Light # 7	Light # 8
E	U2 NSO	2 0	n/a	n/a	Controls procedure from control room		216-1	216-2	216A-1	216A-2	311-1	311-2	311A-1	311A-2
E	OOSS	8.2.5.A	Bus 25	MCC 2A; MCC 2B	Start at SSD equip cart at Bus 25, North of AEER		239-2	243-1	243-2	244-1	244-2	238-1		
E	OOSS	1.1.2.2	Bus 25	MCC 2A; MCC 2B			258-1	258-2	259-1	259-2				
E	OOSS	1.1.2.3	Bus 25	MCC 2A; MCC 2B			263-1	263-2						
E	OOSS	1.1.2.4	n/a	n/a	MCC 2A; MCC 2B	M	266-1	266-2	204-1	204-2	268-1	268-2	269-1	269-2
E	OOSS	1.1.2.4	n/a	n/a	SWGR 29; SWGR 28		229-1	229-2	229-3					
E	OOSS	8.2.8	SWGR 29; SWGR 28	MCC #3			267-1	267-2	257-1	257-2	344-1	344-2	345-1	345-2
E	OOSS	8.2.6.E	SWGR 29; SWGR 28	MCC #3			316-3	343-1						
E	OOSS	6.1	n/a	n/a	MCC #3		329-1	329-2						
E	OOSS	8.2.6.E	MCC #3	Bus 24-1			316-3	343-1						
E	OOSS	8.2.8	MCC #3	Bus 24-1			267-1	267-2	257-1	257-2	344-1	344-2	345-1	345-2
E	OOSS	1.1.2.4	MCC #3	Bus 24-1			204-2	266-1	266-2					
E	OOSS	1.1.2.3	n/a	n/a	Bus 24-1		263-1	263-2	202-1	202-2	298-1	230-1	297-1	
E	OOSS	1.1.2.2	Bus 24-1	Bus 24			259-1	259-2	258-1	258-2				
E	OOSS	8.2.5.A	Bus 24-1	Bus 24			238-2	244-1	244-2	243-1	243-2	239-2		
E	OOSS	8.2.6.A	n/a	n/a	247-1		247-2	249-2	104-1	104-2				
E	U2 EA	8.2.5.A	Bus 25	MCC 29-2	Start at SSD equip cart at Bus 25, North of AEER		239-1							
E	U2 EA	8.2.5.A	n/a	n/a	MCC 29-2	M	239-1							
E	U2 EA	1.1.2.2	n/a	n/a	MCC 28-1		258-1	258-2	259-1	259-2	201-1	201-2	295-2	
E	U2 EA	1.1.2.3	MCC 28-1	U2 ISCO Sightglass Valves (4)			263-1	263-2						
E	U2 EA	1.1.2.4	MCC 28-1	U2 ISCO Sightglass Valves (4)			266-1	266-2	204-1	204-2	268-1	268-2	205-2	270-2
E	U2 EA	1.1.2.5.A	n/a	n/a	U2 ISCO Sightglass Valves (4), MO 2-1301-10	M	210-1	210-2	210-3	237-1	237-2	237A-3		
E	HVO	8.2.5.A	Bus 25	Panel 2202-75	Start at SSD equip cart at Bus 25, North of AEER		239-3	243-1	243-2	244-1	244-2	238-2		
E	HVO	1.1.2.2	Bus 25	Panel 2202-75			258-1	258-2	278-1	278-2				
E	HVO	1.3.2	n/a	n/a	Panel 2202-75		278A-1	278A-2						
E	HVO	1.1.2.2	Panel 2202-75	MO 2-1201-2 & 2-1201-3			259-1	259-2						
E	HVO	1.1.2.3	Panel 2202-75	MO 2-1201-2 & 2-1201-3			263-1	263-2						
E	HVO	1.1.2.4	n/a	n/a	RWCU Pipe Chase MO 2-1201-2 & 2-1201-3	M	266-1	266-2	204-1	204-2	268-1	268-2	299-1	299-2
E	HVO	8.2.5.C	n/a	n/a	Alt RWCU Isolation		245-1	245-2	212-1	212-2				
E	HVO	8.2.5.C	n/a	n/a	2/3-3999-348 & 2-3999-359 valves	M	T ALT #2							
E	HVO	8.2.2.A	2/3-3999-348 & 2-3999-359 valves	U2 CRD Pump valves			233A-1	233-1	233-2	233-3	234-1			
E	HVO	8.2.2.A	n/a	n/a	U2 CRD Pump valves		233A-1	233-1	233-2	233-3				
E	HVO	8.2.5.C	n/a	n/a	MCC 26-1		241-1	212-1	212-2	213-1	213-2	238-1		
E	HVO	8.2.2.A	n/a	n/a	MO 2-0301-2B, Panel 2252-76	M	232A-1	233-2	233-1	234-1				
E	HVO	8.2.5.C	Panel 2252-76	Valve 3-0301-9A or 3-0301-9B			241-1	213-1	213-2	212-2	212-1	245-1	245-2	
E	HVO	8.2.5.A	Panel 2252-76	Valve 3-0301-9A or 3-0301-9B			238-2							
E	HVO	1.1.2.2	Panel 2252-76	Valve 3-0301-9A or 3-0301-9B			258-1	258-2	201-1	201-2	261-1	261-2	200-1	200-2
E	HVO	1.1.1.2	n/a	n/a	Valve 3-0301-9A or 3-0301-9B		309-1	330-1	308-1					
E	HVO	1.1.2.2	Valve 3-0301-9A or 3-0301-9B	Outside/CST Sheds			200-1	200-2	261-1	261-2	201-1	201-2	258-1	258-2
E	HVO	8.2.5.A	Valve 3-0301-9A or 3-0301-9B	Outside/CST Sheds			238-2	244-1	244-2	243-1	243-2	239-2		
E	HVO	outside	n/a	n/a	CST Sheds 2/3A, 1A, 2/3B		N/A							
E	HVO	11.3	n/a	n/a	MO 2-3906		273-1	272-1	272-3					
E	HVO	8.2.5.A	MO 2-3906	U2 DG			239-3	243-1	243-2	244-2	238-2			
E	HVO	9.0.A	n/a	n/a	U2 DG		208A-1	208A-2	208A-3	209-1	209-2			
E	HVO	8.2.5.A	U2 DG	SW Valves (11)			239-2	243-1	243-2	244-1	244-2			
E	HVO	8.2.5.C	U2 DG	SW Valves (11)			245-1	245-2	212-1	212-2	T ALT #3			
E	HVO	8.2.6.C	n/a	n/a	SW Valves (11)	M	245-1	245-2	212-1	212-2	T ALT #3			
E	HVO	8.2.5.C	SW Valves (11)	U2 DG			245-1	245-2	212-1	212-2				

AccessEgress Paths

SSD Path	Operator	Fire Zone	from epn	to epn	EPN Description	Manual Operation	Light # 1	Light # 2	Light # 3	Light # 4	Light # 5	Light # 6	Light # 7	Light # 8
E	HVO	8.2.5.A	SW Valves (11)	U2 DG			244-1	244-2						
E	HVO	9.0.A	n/a	n/a	U2 DG		208A-1	208A-2	208A-3	209-1	209-2A			
E	U3 AUX NSO	8.2.5.A	Bus 25	IR 2202-5; IR 2202-6	Start at SSD equip cart at Bus 25, North of AEER		239-2	243-1	243-2	244-1	244-2	238-2		
E	U3 AUX NSO	1.1.2.2	Bus 25	IR 2202-5; IR 2202-6			258-1	258-2	259-1	259-2				
E	U3 AUX NSO	1.1.2.3	n/a	n/a	IR 2202-5; IR 2202-6	M	263-1	263-2	202-1	202-2	297-2	T ALT #10		
E	U3 AUX NSO	1.1.2.2	n/a	n/a	IR 2202-7; IR 2202-8	M	259-1	259-2	278-3	201-1	201-2	261-1	261-2	293-2
E	Rad Rover	8.2.5.A	Bus 25	FI 2/3-4341-152	Start at SSD equip cart at Bus 25, North of AEER		238-2							
E	Rad Rover	18.7.2	n/a	n/a	FI 2/3-4341-152		400A-1	400A-2	400B-1	400B-2	400C-1	400C-2		
E	Rad Rover	outside	n/a	n/a	Panel 2223-119 in MUDS building		N/A							
E	Rad Rover	11.3	n/a	n/a	MO 2-3906; PI 2/3-4141-4A; 2/3 DFP; 2B SW Pump	M	273-1	272-1	272-3					

AccessEgress Paths

SSD Path	Operator	Fire Zone	from epn	to epn	EPN Description	Manual Operation	Light # 1	Light # 2	Light # 3	Light # 4	Light # 5	Light # 6	Light # 7	Light # 8
F	U3 NSO	2.0	n/a	n/a	Controls procedure from control room		216-1	216-2	216A-1	216A-2	311A-1	311A-2	311-1	311-2
F	OOSS	8.2.5.A	Bus 25	MCC #2	Start at SSD equip cart at Bus 25, North of AEER		239-2							
F	OOSS	8.2.6.A	Bus 25	MCC #2			104-1	104-2						
F	OOSS	8.2.7	Bus 25	MCC #2			247-1	247-2						
F	OOSS	7.0.A	n/a	n/a	U2 Battery room; MCC #2		231-1	231-2	T ALT #1					
F	OOSS	8.2.7	MCC #2	MCC 3A; MCC 3B; SWGR 39; SWGR 38			247-1	247-2						
F	OOSS	8.2.6.A	MCC #2	MCC 3A; MCC 3B; SWGR 39; SWGR 38			104-1	104-2						
F	OOSS	8.2.5.A	MCC #2	MCC 3A; MCC 3B; SWGR 39; SWGR 38			239-2	243-1	243-2	244-1	244-2	238-2		
F	OOSS	1.1.2.2	MCC #2	MCC 3A; MCC 3B; SWGR 39; SWGR 38			258-1	258-2	259-1	259-2				
F	OOSS	1.1.2.3	MCC #2	MCC 3A; MCC 3B; SWGR 39; SWGR 38			263-1	263-2						
F	OOSS	1.1.2.4	MCC #2	MCC 3A; MCC 3B; SWGR 39; SWGR 38			266-1	266-2	204-1	204-2	268-1	268-2	205-1	205-2
F	OOSS	1.1.1.4	n/a	n/a	MCC 3A; MCC 3B; SWGR 39; SWGR 38	M	305-1	305-3	360-1	360-2	360-3	327-1	327-2	
F	OOSS	1.1.2.4	MCC 3A; MCC 3B; SWGR 39; SWGR 38	Bus 34-1			270-1	270-2						
F	OOSS	1.1.2.3	MCC 3A; MCC 3B; SWGR 39; SWGR 38	Bus 34-1			265-1	265-2						
F	OOSS	1.1.1.3	n/a	n/a	Bus 34-1		307-1	307-2	358-2	350-1	350-2			
F	OOSS	1.1.1.2	Bus 34-1	Bus 34			347-1	347-2	346-1	346-2				
F	OOSS	8.2.5.E	Bus 34-1	Bus 34			335-1	314-1						
F	OOSS	8.2.6.E	n/a	n/a	Bus 34		316-3	343-1	343-2	342-1	342-2			
F	U3 EA	8.2.5.A	Bus 25	MCC 39-2	Start at SSD equip cart at Bus 25, North of AEER		239-3	243-1	243-2	244-1	244-2			
F	U3 EA	8.2.5.C	Bus 25	MCC 39-2			245-1	245-2	212-1	212-2	242A-1	242A-2		
F	U3 EA	8.2.6.C	n/a	n/a	MCC 39-2	M	214-1	214-3	215-1	215-2				
F	U3 EA	8.2.8	MCC 39-2	U3 ISCO Sightglass Valves (4)			256-1	256-2	267-1	267-2				
F	U3 EA	1.1.2.4	MCC 39-2	U3 ISCO Sightglass Valves (4)			204-1	268-1	268-2	205-1	205-2	270-1	270-2	
F	U3 EA	1.1.2.5.A	MCC 39-2	U3 ISCO Sightglass Valves (4)			210-2							
F	U3 EA	1.1.1.5.A	n/a	n/a	U3 ISCO Sightglass Valves (4)	M	303-1	361-1	361-2					
F	U3 EA	1.1.2.5.A	U3 ISCO Sightglass Valves (4)	Valves 2/3-3999-348, 3-3999-359			210-2							
F	U3 EA	1.1.2.4	U3 ISCO Sightglass Valves (4)	Valves 2/3-3999-348; 3-3999-359			270-1	270-2	205-1	205-2	268-1	268-2	204-1	204-2
F	U3 EA	8.2.8	U3 ISCO Sightglass Valves (4)	Valves 2/3-3999-348; 3-3999-359			267-1	267-2	256-1	256-2				
		8.2.6.C	U3 ISCO Sightglass Valves (4)	Valves 2/3-3999-348, 3-3999-359			214-1							
F	U3 EA	8.2.5.C	n/a	n/a	Valves 2/3-3999-348, 3-3999-359		242A-1	242A-2	T ALT #2	T ALT #3	340-1	340-2		
F	U3 EA	8.2.2.B	n/a	n/a	U3 CRD Pump Room Valves (8)		332A-1	332A-2	332-1	332-2	331-1			
F	U3 EA	8.2.5.C	U3 CRD Pump Room Valves (8)	MCC 36-1			340-1	340-2	213-1	213-2	341-1	341-2		
F	U3 EA	8.2.5.E	n/a	n/a	MCC 36-1 517 U-3 TB Near Air compressor		368-1							
F	U3 EA	8.2.5.C	MCC 36-1	MO 3-0301-2B			345-1	213-1	213-2	340-1	340-2			
F	U3 EA	8.2.2.B	n/a	n/a	MO 3-0301-2B	M	332A-1	332A-2	332-1	332-2	331-1	331-3		
F	U3	8.2.5.A	Bus 25	Panel 2203-75	Start at SSD equip cart at Bus 25, North of AEER		239-3	243-1	243-2	244-1	244-2			

AccessEgress Paths

SSD Path	Operator	Fire Zone	from epn	to epn	EPN Description	Manual Operation	Light # 1	Light # 2	Light # 3	Light # 4	Light # 5	Light # 6	Light # 7	Light # 8
F	HVO	8.2.5.C	Bus 25	Panel 2203-75			245-1	245-2	212-1	341-1	341-2			
F	HVO	8.2.5.E	Bus 25	Panel 2203-75			335-1							
F	HVO	1.1.1.2	Bus 25	Panel 2203-75			346-1	346-2	308-1	308-2	330-1	309-1	353-1	353-2
F	HVO	1.4.1	n/a	n/a	TIP Room, Panel 2203-75		353-3							
F	HVO	1.1.1.2	n/a	n/a	MCC 38-1; MCC 38-4		353-1	353-2	309-2	309-3	T ALT#8			
F	HVO	8.2.5.E	MCC 38-1; MCC 38-4	U3 DG			335-1	314-1						
F	HVO	9.0.B	n/a	n/a	U3 DG		363-1	363-2	313-1	313-2				
F	HVO	8.2.5.E	U3 DG	SW Valves (11)			314-1							
F	HVO	8.2.5.C	U3 DG	SW Valves (11)			341-1	341-2	213-1	213-2	242A-1	242A-2		
F	HVO	8.2.6.C	n/a	n/a	SW Valves (11)	M	214A-1	214A-2						
F	HVO	8.2.8	SW Valves (11)	MO 3-1201-2 & MO 3-1201-3			254-1	254-2	257-1	257-2	267-1	267-2		
F	HVO	1.1.2.4	SW Valves (11)	MO 3-1201-2 & MO 3-1201-3			204-1	204-2	268-1	268-2	205-1	205-2		
F	HVO	1.1.1.4	n/a	n/a	RWCU Pipe Chase MO 3-1201-2 & MO 3-1201-3	M	305-1	359-2	352-1	352-2				
F	HVO	1.1.2.4	MO 3-1201-2 & MO 3-1201-3	Alt. RWCU Isolation			205-1	205-2	268-1	268-2	204-1	204-2		
F	HVO	8.2.8	MO 3-1201-2 & MO 3-1201-3	Alt. RWCU Isolation			267-1	267-2	257-1	257-2	254-2			
F	HVO	8.2.6.C	MO 3-1201-2 & MO 3-1201-3	Alt. RWCU Isolation			214-1							
F	HVO	8.2.5.C	n/a	n/a	Alt. RWCU Isolation		242A-1	242A-2	212-2					
F	U2 AUX NSO	8.2.5.A	Bus 25	IR 2203-5; IR 2203-6	Start at SSD equip cart at Bus 25, North of AEER		239-3	243-1	243-2	244-1	244-2			
F	U2 AUX NSO	8.2.5.C	Bus 25	IR 2203-5; IR 2203-6			245-1	245-2	212-1	341-1	341-2			
F	U2 AUX NSO	8.2.5.E	Bus 25	IR 2203-5; IR 2203-6			335-1							

AccessEgress Paths

SSD Path	Operator	Fire Zone	from epn	to epn	EPN Description	Manual Operation	Light # 1	Light # 2	Light # 3	Light # 4	Light # 5	Light # 6	Light # 7	Light # 8
F	U2 AUX NSO	1.1.1.2	Bus 25	IR 2203-5, IR 2203-6			346-1	346-2	347-1	347-2				
F	U2 AUX NSO	1.1.1.3	n/a	n/a	IR 2203-5; IR 2203-6	M	349-1	349-2	357-2	306-2	306-1	358-1	357-1	
F	U2 AUX NSO	1.1.1.2	n/a	n/a	IR 2203-7, IR 2203-8	M	308-1	308-2	356-1	356-2	330-1	369-1	369-2	
F	Rad Rover	8.2.5.A	Bus 25	Outside/CST Sheds	Start at SSD equip cart at Bus 25, North of AEER		239-2							
F	Rad Rover	outside	n/a	n/a	2/3A CST Shed; 2/3B CST Shed		N/A							
F	Rad Rover	11.3	n/a	n/a	Cribhouse; SW Pump	M	273-1	272-1	272-3					

AccessEgress Paths

SSD Path	Operator	Fire Zone	from epn	to epn	EPN Description	Manual Operation	Light # 1	Light # 2	Light # 3	Light # 4	Light # 5	Light # 6	Light # 7	Light # 8
A2/B2	U2 NSO	2.0	n/a	n/a	Controls procedure from control room		216-1	216-2	216A-1	216A-2	311-1	311-2	311A-1	311A-2
A2/B2	U3 NSO	2.0	n/a	n/a	Controls procedure from control room		216-1	216-2	216A-1	216A-2	311-1	311-2	311A-1	311A-2
A2/B2	HVO	8.2.5.A	Bus 25	U3 HPCI	Start at SSD equip cart at Bus 25, North of AEER		239-3	243-1	243-2	244-1	244-1	238-2		
A2/B2	HVO	1.1.2.2	Bus 25	U3 HPCI			258-1	258-2	201-1	201-2	261-1	261-2	262-1	262-2
A2/B2	HVO	9.0.C	Bus 25	U3 HPCI			287-2	217-1	288-2					
A2/B2	HVO	1.1.1.3	n/a	n/a	U3 HPCI Turbine Manual Trip Lever	M	291-1	291-2	291-3					
A2/B2	HVO	11.2.3	n/a	n/a	U2 HPCI Turbine Manual Trip Lever	M	290-1	290-2	290-3					
A2/B2	HVO	9.0.C	n/a	n/a	Panel 2202-76, Panel 2203-76, 2/3 DG		288-1	217-1	217-2	277-1	277-2	287-1	287-2	
A2/B2	OOSS	8.2.5.A	Bus 25	Bus 2A-1; Bus 2B-1; Bus 2	Start at SSD equip cart at Bus 25, North of AEER		239-2							
A2/B2	OOSS	8.2.6.A	Bus 25	Bus 2A-1; Bus 2B-1; Bus 2			104-1	104-2						
A2/B2	OOSS	8.2.7	Bus 25	Bus 2A-1; Bus 2B-1; Bus 2			247-1	247-2						
A2/B2	OOSS	7.0.A	n/a	n/a	Bus 2A-1; Bus 2B-1; Bus 2	M	231-1	231-2	231A-1	231A-2	T ALT #1			
A2/B2	OOSS	8.2.7	Bus 2A-1; Bus 2B-1; Bus 2	Bus 23			247-1	247-2						
A2/B2	OOSS	8.2.6.A	n/a	n/a	Bus 23		248-1	248-2	249-2	104-1	104-2			
A2/B2	OOSS	8.2.5.A	Bus 23	MCC 2A; MCC 2B; SWGR 28			239-3	243-1	243-2	244-1	244-2	238-2		
A2/B2	OOSS	1.1.2.2	Bus 23	MCC 2A; MCC 2B; SWGR 28			258-1	258-2	259-1	259-2				
A2/B2	OOSS	1.1.2.3	Bus 23	MCC 2A; MCC 2B; SWGR 28			263-1	263-2						
A2/B2	OOSS	1.1.2.4	n/a	n/a	MCC 2A; MCC 2B, SWGR 28	M	266-1	266-2	204-1	204-2	268-1	268-2	269-1	269-2
A2/B2	OOSS	1.1.2.3	n/a	n/a	Bus 23-1	M	263-1	263-2	202-1	202-2	298-1	298-3	230-2	
A2/B2	OOSS	1.1.2.3	n/a	n/a	IR 2202-5, IR 2202-6	M	297-2	298-1	298-2	202-2	T ALT #10	297-2		
A2/B2	OOSS	1.1.2.2	n/a	n/a	IR 2202-7, IR 2202-8	M	259-1	259-2	278-3	295-1	261-2	293-1	293-2	
A2/B2	OOSS	8.2.5.A	IR 2202-7; IR 2202-8	Bus 23			238-2	244-1	244-2	243-1	243-2	239-1	239-2	
A2/B2	OOSS	8.2.6.A	n/a	n/a	Bus 23		248-1	249-2	104-1	104-2				
A2/B2	U2 or U3 AUX N	8.2.5.A	Bus 25	Bus 3B-1; Panel 2203-32	Start at SSD equip cart at Bus 25, North of AEER		239-3	243-1	243-2	244-1	244-2			
A2/B2	U2 or U3 AUX N	8.2.5.C	Bus 25	Bus 3B-1; Panel 2203-32			245-1	245-2	212-1	341-1	341-2			
A2/B2	U2 or U3 AUX N	8.2.5.E	Bus 25	Bus 3B-1; Panel 2203-32			314-1							
A2/B2	U2 or U3 AUX N	8.2.6.E	Bus 25	Bus 3B-1; Panel 2203-32			316-3	343-1						
A2/B2	U2 or U3 AUX N	6.1	n/a	n/a	Bus 3B-1; Panel 2203-32	M	329-1	329-2						
A2/B2	U2 or U3 AUX N	8.2.6.E	Bus 3B-1; Panel 2203-32	MCC 3A; MCC 3B, SWGR 38			343-1	316-3						
A2/B2	U2 or U3 AUX N	8.2.5.E	Bus 3B-1; Panel 2203-32	MCC 3A; MCC 3B, SWGR 38			314-1	335-1						
A2/B2	U2 or U3 AUX N	1.1.1.2	Bus 3B-1; Panel 2203-32	MCC 3A; MCC 3B, SWGR 38			346-1	346-2	347-1	347-2				
A2/B2	U2 or U3 AUX N	1.1.1.3	Bus 3B-1; Panel 2203-32	MCC 3A; MCC 3B, SWGR 38			349-1	349-2						
A2/B2	U2 or U3 AUX N	1.1.1.4	n/a	n/a	MCC 3A, MCC 3B, SWGR 38		351-1	351-2	304-1	304-2	359-1	359-2	327-1	327-2
A2/B2	U2 or U3 AUX N	1.1.2.4	MCC 3A; MCC 3B, SWGR 38	Bus 33-1			205-2	270-1	270-2					
A2/B2	U2 or U3 AUX N	1.1.2.3	MCC 3A, MCC 3B, SWGR 38	Bus 33-1			265-1	265-2						
A2/B2	U2 or U3 AUX N	1.1.1.3	n/a	n/a	Bus 33-1	M	307-1	307-2	358-2	328-1	328-2			
A2/B2	U2 or U3 AUX N	1.1.1.2	Bus 33-1	Bus 33			347-1	347-2	346-1	346-2				
A2/B2	U2 or U3 AUX N	8.2.5.E	Bus 33-1	Bus 33			335-1	314-1						
A2/B2	U2 or U3 AUX N	8.2.6.E	n/a	n/a	Bus 33		316-3	343-1	343-2	315-1	315-2			
A2/B2	U2 or U3 AUX N	8.2.5.E	Bus 33	IR 2203-5, IR 2203-6			314-1	335-1						
A2/B2	U2 or U3 AUX N	1.1.1.2	Bus 33	IR 2203-5, IR 2203-6			346-1	346-2	347-1	347-2				
A2/B2	U2 or U3 AUX N	1.1.1.3	n/a	n/a	IR 2203-5, IR 2203-6	M	349-1	349-2	306-1	306-2	358-1	357-1		
A2/B2	U2 or U3 AUX N	1.1.1.2	n/a	n/a	IR 2203-7, IR 2203-8	M	347-1	347-2	308-1	308-2	356-2	330-1	369-1	369-2
A2/B2	U2 EA	8.2.5.A	Bus 25	MCC 28-1	Start at SSD equip cart at Bus 25, North of AEER		239-3	243-1	243-2	244-1	244-2	238-2		
A2/B2	U2 EA	1.1.2.2	n/a	n/a	MCC 28-1		258-1	258-2	201-1	201-2	295-2	261-1		
A2/B2	U2 EA	1.1.2.3	MCC 28-1	2-1301-16			265-1	265-2						
A2/B2	U2 EA	1.1.2.4	MCC 28-1	2-1301-16			270-1	270-2						
A2/B2	U2 EA	1.1.2.5.A	n/a	n/a	2-1301-16		210-2	210-3	237-1	237-2	T ALT #7			

AccessEgress Paths

SSD Path	Operator	Fire Zone	from epn	to epn	EPN Description	Manual Operation	Light # 1	Light # 2	Light # 3	Light # 4	Light # 5	Light # 6	Light # 7	Light # 8
A2/B2	U2 EA	1.1.2.4	2-1301-16	MO 2-1301-3			270-1	270-2	205-2	229-3				

AccessEgress Paths

SSD Path	Operator	Fire Zone	from epn	to epn	EPN Description	Manual Operation	Light # 1	Light # 2	Light # 3	Light # 4	Light # 5	Light # 6	Light # 7	Light # 8
A2/B2	U2 EA	1.1.2.5.C	n/a	n/a	MO 2-1301-3	M	279-1	279-2						
A2/B2	U2 EA	1.1.2.4	MO 2-1301-3	MO 2-1301-2			229-3	205-2	270-1	270-2				
A2/B2	U2 EA	1.1.2.3	MO 2-1301-3	MO 2-1301-2			265-1	265-2	203-1	203-2	297-2	298-2		
A2/B2	U2 EA	1.1.2.5.B	n/a	n/a	MO 2-1301-2	M	280-1	280-2						
A2/B2	U2 EA	1.1.2.3	MO 2-1301-2	U2 ISCO Sightglass Valves (4)			298-2	297-2	203-1	265-1	265-2			
A2/B2	U2 EA	1.1.2.4	MO 2-1301-2	U2 ISCO Sightglass Valves (4)			270-1	270-2						
A2/B2	U2 EA	1.1.2.5.A	n/a	n/a	U2 ISCO Sightglass Valves (4); MO 2-4399-74, MO 2-4102, MO 2-1301-10	M	210-1	210-2	210-3	237A-3	237-1	237-2	237A-3	
A2/B2	U2 EA	1.1.2.4	n/a	n/a	RWCU Pipechase		271-1	271-2	205-1	205-2	299-1	299-2		
A2/B2	U2 EA	8.2.5.C	n/a	n/a	Alt RWCU Isolation		212-3							
A2/B2	U2 EA	1.1.2.3	n/a	n/a	SW Valves (11)	M	T ALT #10							
A2/B2	U3 EA	8.2.5.A	Bus 25	MCC 38-1; MCC 38-4	Start at SSD equip cart at Bus 25, North of AEER		239-3	243-1	243-2	244-1	244-2	238-2		
A2/B2	U3 EA	1.1.2.2	Bus 25	MCC 38-1; MCC 38-4			258-2	258-1	201-1	201-2	261-2	200-1	200-2	
A2/B2	U3 EA	1.1.1.2	n/a	n/a	MCC 38-1; MCC 38-4		309-2	309-3	309-1	T ALT #8				
A2/B2	U3 EA	1.1.2.2	MCC 38-1; MCC 38-4	3-1301-16			200-1	200-2	264-1	264-2				
A2/B2	U3 EA	1.1.2.3	MCC 38-1; MCC 38-4	3-1301-16			265-1	265-2						
A2/B2	U3 EA	1.1.2.4	MCC 38-1; MCC 38-4	3-1301-16			270-1	270-2						
A2/B2	U3 EA	1.1.2.5.A	MCC 38-1; MCC 38-4	3-1301-16			210-2							
A2/B2	U3 EA	1.1.1.5.A	n/a	n/a	3-1301-16	M	303-1	361-1	361-2	303-2				
A2/B2	U3 EA	1.1.2.5.A	3-1301-16	MO 3-1301-2			210-2							
A2/B2	U3 EA	1.1.2.4	3-1301-16	MO 3-1301-2			270-1	270-2						
A2/B2	U3 EA	1.1.1.4	3-1301-16	MO 3-1301-2			305-1	305-3	360-1					
A2/B2	U3 EA	1.1.1.5.B	n/a	n/a	MO 3-1301-2	M	355-1	355-2						
A2/B2	U3 EA	1.1.1.4	MO 3-1301-2	MO 3-1301-3			360-1	305-1	305-3	359-1	359-2	304-1	351-1	351-2
A2/B2	U3 EA	1.1.1.3	MO 3-1301-2	MO 3-1301-3			349-1	349-2	357-2	350-3				
A2/B2	U3 EA	1.1.1.5.C	n/a	n/a	MO 3-1301-3	M	354-1	354-2						
A2/B2	U3 EA	1.1.1.3	MO 3-1301-3	U3 ISCO Sightglass Valves (4)			358-1	307-1	307-2					
A2/B2	U3 EA	1.1.2.3	MO 3-1301-3	U3 ISCO Sightglass Valves (4)			203-1	265-1	265-2					
A2/B2	U3 EA	1.1.2.4	MO 3-1301-3	U3 ISCO Sightglass Valves (4)			270-1	270-2						
A2/B2	U3 EA	1.1.2.5.A	MO 3-1301-3	U3 ISCO Sightglass Valves (4)			210-2							
A2/B2	U3 EA	1.1.1.5.A	n/a	n/a	U3 ISCO Sightglass Valves (4); MO 3-4399-74, MO 3-4102, MO 3-1301-10	M	303-1	361-1	361-2	362-1				
A2/B2	U3 EA	1.1.2.5.A	MO 3-1301-10	MCC 38-3			210-2							
A2/B2	U3 EA	1.1.2.4	MO 3-1301-10	MCC 38-3			270-1	270-2	205-1	205-2	268-1	268-2	204-1	204-2
A2/B2	U3 EA	8.2.8	MO 3-1301-10	MCC 38-3			267-1	267-2	257-1	257-2	344-1	344-2	345-1	345-2
A2/B2	U3 EA	8.2.6.E	n/a	n/a	MCC 38-3		316-3	316-1	316-2					
A2/B2	U3 EA	8.2.8	MCC 38-3	MO 3-1201-2 & 3-1201-3			267-1	267-2	257-1	257-2	344-1	344-2	345-1	345-2
A2/B2	U3 EA	1.1.2.4	MCC 38-3	MO 3-1201-2 & 3-1201-3			204-1	204-2	268-1	268-2	205-1	205-2		
A2/B2	U3 EA	1.1.1.4	n/a	n/a	RWCU Pipe Chase: MO 3-1201-2 & 3-1201-3	M	305-1	359-2	352-1	352-2				
A2/B2	U3 EA	8.2.5.C	n/a	n/a	Alt RWCU Isolation		212-2	212-3						
A2/B2	U3 EA	8.2.5.C	Alt RWCU Isolation	SW Valves (11)			212-2	T-ALT # 3	341-1	341-2	335-2			
A2/B2	U3 EA	1.1.1.2	Alt RWCU Isolation	SW Valves (11)			346-1	346-2	347-1	347-2				
A2/B2	U3 EA	1.1.1.3	n/a	n/a	SW Valves (11)	M	349-1	349-2	357-2	306-1	350-3			
A2/B2	U1 EA	8.2.5.A	Bus 25	2-3999-359, 2/3 3999-348	Start at SSD equip cart at Bus 25, North of AEER		238-2	243-1	243-2	244-1	244-2			
				n/a	2-3999-359, 2/3-3999-348		245-1	245-2	212-1	212-2	213-1	213-2	T-ALT#2	

AccessEgress Paths

SSD Path	Operator	Fire Zone	from epn	to epn	EPN Description	Manual Operation	Light # 1	Light # 2	Light # 3	Light # 4	Light # 5	Light # 6	Light # 7	Light # 8
A2/B2	U1 EA	8.2.2.A	n/a	n/a	U2 CRD Pump Room Valves (8)		233A-1	233A-2	233-1	233-2	234-1			
A2/B2	U1 EA	8 2.5.C	U2 CRD Pump Room Valves (8)	MO 2-0301-2A			241-1	241-2						
A2/B2	U1 EA	8 2 2.A	n/a	n/a	MO 2-0301-2A	M	233A-1	233A-2	233-1	233-2	234-1			
A2/B2	U1 EA	8.2.5.C	MO 2-0301-2A	Valve 2-0301-9A or 2-0301-9B			241-1	241-2	213-1	213-2	212-1	212-2	245-1	245-2
A2/B2	U1 EA	8 2.5.A	MO 2-0301-2A	Valve 2-0301-9A or 2-0301-9B			238-2							
A2/B2	U1 EA	1 1.2.2	n/a	n/a	Valve 2-0301-9A or 2-0301-9B		258-1	258-2	201-1	201-2				
A2/B2	U1 EA	8.2.5.A	n/a	n/a	Reactor feed pump room		239-3	243-1	243-2	244-1	244-2	208-2		
A2/B2	U1 EA	8.2 5.C	n/a	n/a	3-3999-359		245-1	245-2	212-1	212-2	T ALT #3			
A2/B2	U1 EA	8.2.2.B	n/a	n/a	U3 CRD Pump Room Valves (8)		332A-1	332A-2	332-1	332-2	331-1			
A2/B2	U1 EA	8.2.5.C	U3 CRD Pump Room Valves (8)	MCC 35-2			340-1	340-2	213-1	213-2	341-1	341-2		

AccessEgress Paths

SSD Path	Operator	Fire Zone	from epn	to epn	EPN Description	Manual Operation	Light # 1	Light # 2	Light # 3	Light # 4	Light # 5	Light # 6	Light # 7	Light # 8
A2/B2	U1 EA	8.2.5.E	U3 CRD Pump Room Valves (8)	MCC 35-2			314-1							
A2/B2	U1 EA	8.2.6.E	n/a	n/a	MCC 35-2		316-3	343-1	343-2					
A2/B2	U1 EA	8.2.5.E	MCC 35-2	MO 3-0301-2A			314-1							
A2/B2	U1 EA	8.2.5.C	MCC 35-2	MO 3-0301-2A			341-1	341-2	213-1	213-2	340-1	340-2		
A2/B2	U1 EA	8.2.2.B	n/a	n/a	MO 3-0301-2A	M	332A-1	332A-2	332-1	332-2	331-1	331-3		
A2/B2	U1 EA	8.2.5.C	MO 3-0301-2A	Valve 3-0301-9A or 3-0301-9B			341-1	341-2	213-1	213-2	340-1	340-2		
A2/B2	U1 EA	8.2.5.E	MO 3-0301-2A	Valve 3-0301-9A or 3-0301-9B			335-1							
A2/B2	U1 EA	1.1.1.2	n/a	n/a	Valve 3-0301-9A or 3-0301-9B		346-1	346-2	308-1	308-2				
A2/B2	Rad Rover	8.2.5.A	Bus 25	Outside/CST Sheds	Start at SSD equip cart at Bus 25, North of AEER		239--2							
A2/B2	Rad Rover	outside	n/a	n/a	CST Sheds: 2/3A, 1A, 2/3B		N/A							
A2/B2	Rad Rover	outside	n/a	n/a	Panel 2223-119 in MUDS Building		N/A							
A2/B2	Rad Rover	3.7	n/a	n/a	PI 2/3-4141-4A, 2/3 DFP		273-1	272-2	337-2					
A2/B2	Rad Rover	18.7.2	n/a	n/a	ISCO Makeup Pump Room		400A-1	400A-2	400B-1	400B-2	400C-1	400C-2		
A2/B2	Rad Rover	11.3	n/a	n/a	MO 2-3906		273-1	272-1	272-2	272-3				
A2/B2	Rad Rover	18.7.2	n/a	n/a	ISCO Makeup Pump Room		400A-1	400A-2	400B-1	400B-2	400C-1	400C-2		

AccessEgress Paths

SSD Path	Operator	Fire Zone	from epn	to epn	EPN Description	Manual Operation	Light # 1	Light # 2	Light # 3	Light # 4	Light # 5	Light # 6	Light # 7	Light # 8
CR	U2 NSO	2.0	n/a	n/a	Controls procedure from control room		216-1	216-2	216A-1	216A-2	311-1	311-2	311A-1	311A-2
CR	U2 NSO	8.2.5.A	Bus 25	U2 X-Area	Start at SSD equip cart at Bus 25, North of AEER		239-3	243-1	243-2	244-1	244-2			
CR	U2 NSO	8.2.5.A	n/a	n/a	U2 X-Area - MSIV Isolation		244-1	244-2	245-1	245-2	245-3			
	U2 NSO	1.1.2.2	U2 X-Area	MCC 2A; MCC 2B; SWGR 28, SWGR 29			258-1	258-2	259-1	259-2				
	U2 NSO	1.1.2.3	U2 X-Area	MCC 2A; MCC 2B; SWGR 28, SWGR 29			263-1	263-2						
CR	U2 NSO	1.1.2.4	n/a	n/a	MCC 2A, MCC 2B, SWGR 28, SWGR 29	M	266-1	266-2	204-1	204-2	268-1	205-1	269-1	269-2
CR	U3 NSO	2.0	n/a	n/a	Controls procedure from control room		216-1	216-2	216A-1	216A-2	311-1	311-2	311A-1	311A-2
CR	U3 NSO	8.2.5.A	Bus 25	U3 X-Area	Start at SSD equip cart at Bus 25, North of AEER		239-3	243-1	243-2	244-1	244-2			
CR	U3 NSO	8.2.5.C	Bus 25	U3 X-Area			245-1	245-2	341-1	341-2				
CR	U3 NSO	8.2.5.E	n/a	n/a	U3 X-Area - MSIV Isolation		341-3							
CR	U3 NSO	1.1.1.2	U3 X-Area	MCC 3A; MCC 3B; Panel #3, SWGR 38			346-1	346-2	347-1	347-2				
CR	U3 NSO	1.1.1.3	U3 X-Area	MCC 3A; MCC 3B; Panel #3 SWGR 38			349-1	349-2						
CR	U3 NSO	1.1.1.4	n/a	n/a	MCC 3A; MCC 3B; Panel #3, SWGR 38	M	351-1	351-2	304-1	304-2	359-2	327-1	327-2	360-3
CR	U3 NSO	1.1.1.3	n/a	n/a	Bus 33-1	M	349-1	349-2	357-2	306-1	328-1	328-2	358-2	
CR	U3 NSO	1.1.1.4	n/a	n/a	SWGR 38, Bus 33-1		351-1	351-2	304-1	304-2	359-2	327-1	327-2	360-3
CR	U3 NSO	1.1.1.3	n/a	n/a	IR 2203-5; IR 2203-6	M	249-1	249-2	357-2	306-1	306-2	358-1	357-1	
CR	U3 NSO	1.1.1.2	n/a	n/a	IR 2203-7, IR 2203-8,3-0301-9A,3-0301-9B	M	347-1	347-2	308-1	356-2	330-1	309-1	369-1	369-2
CR	U2 AUX NSO	8.2.5.A	Bus 25	Panel 2202-76, Panel 2203-76	Start at SSD equip cart at Bus 25, North of AEER		239-3	243-1	243-2	244-1	244-2	238-2		
CR	U2 AUX NSO	1.1.2.2	Bus 25	Panel 2202-76, Panel 2203-76			258-1	258-2	201-1	201-2	261-2	262-1	262-2	
CR	U2 AUX NSO	9.0.C	n/a	n/a	Panel 2202-76, Panel 2203-76		287-1							
CR	U2 AUX NSO	11.2.3	n/a	n/a	U2 HPCI Turbine Manual Trip lever	M	290-1	290-2	290-3					
CR	U2 AUX NSO	11.1.3	n/a	n/a	U3 HPCI Turbine Manual Trip lever	M	291-1	291-2	291-3					
CR	OOSS	8.2.5.A	Bus 25	Bus 2A-1	Start at SSD equip cart at Bus 25, North of AEER		239-2							
CR	OOSS	8.2.6.A	Bus 25	Bus 2A-1			104-1	104-2						
CR	OOSS	8.2.7	Bus 25	Bus 2A-1			247-1	247-2						
CR	OOSS	7.0.A	n/a	n/a	U2 Battery Room, Bus 2A-1	M	231-1	231-2	T ALT #1					
CR	OOSS	8.2.7	Bus 2A-1	Bus 23			247-1	247-2						
CR	OOSS	8.2.6.A	n/a	n/a	Bus 23		104-1	104-2	248-1	249-2				
CR	US	8.2.5.A	Bus 25	Bus 3B-1	Start at SSD equip cart at Bus 25, North of AEER		239-3	243-1	243-2	244-1	244-2			
CR	US	8.2.5.C	Bus 25	Bus 3B-1			245-1	245-2	341-1	341-2				
CR	US	8.2.5.E	Bus 25	Bus 3B-1			314-1							
CR	US	8.2.6.E	Bus 25	Bus 3B-1			316-3	343-1						
CR	US	6.1	n/a	n/a	U3 Battery Charger Room, Bus 3B-1	M	329-1	329-2						
CR	US	8.2.6.E	n/a	n/a	Bus 33, MCC 35-2		343-2							
CR	U2 EA	8.2.5.A	Bus 25	MCC 28-1	Start at SSD equip cart at Bus 25, North of AEER		239-3	243-1	243-2	244-1	244-2	238-2		
CR	U2 EA	1.1.2.2	n/a	n/a	MCC 28-1		258-1	258-2	201-1	201-2	295-2	261-1		
CR	U2 EA	1.1.2.3	MCC 28-1	2-1301-16			263-1	263-2						
CR	U2 EA	1.1.2.4	MCC 28-1	2-1301-16			266-1	266-2	204-1	204-2	268-1	268-2	205-2	270-2
CR	U2 EA	1.1.2.5.A	n/a	n/a	U2 ISCO 2-1301-16	M	210-1	210-2	210-3	237-1	237-2	T ALT #7		
CR	U2 EA	1.1.2.4	2-1301-16	MO 2-1301-2			271-1	271-2	205-2	229-3				
CR	U2 EA	1.1.2.5.B	n/a	n/a	MO 2-1301-2	M	280-1	280-2						
CR	U2 EA	1.1.2.4	MO 2-1301-2	MO 2-1301-3			271-1	271-2	205-2	229-3				
CR	U2 EA	1.1.2.3	MO 2-1301-2	MO 2-1301-3			265-1	265-2	203-1	203-2	297-2	298-2		
CR	U2 EA	1.1.2.5.C	n/a	n/a	MO 2-1301-3	M	279-1	279-2						
CR	U2 EA	1.1.2.3	MO 2-1301-3	U2 ISCO Sightglass Valves (4)			265-1	265-2	203-1	203-2	297-2	298-2		
CR	U2 EA	1.1.2.4	MO 2-1301-3	U2 ISCO Sightglass Valves (4)			270-1	270-2						
CR	U2 EA	1.1.2.5.A	n/a	n/a	U2 ISCO Sightglass Valves (4)	M	210-1	210-2	210-3	237-1	237-2	T ALT #7		
CR	U2 EA	1.1.2.4	U2 ISCO Sightglass Valves (4)	MCC 29-2			270-1	270-2						
CR	U2 EA	1.1.2.3	U2 ISCO Sightglass Valves (4)	MCC 29-2			265-1	265-2	203-2	298-1	202-1	263-1	263-2	

AccessEgress Paths

SSD Path	Operator	Fire Zone	from epn	to epn	EPN Description	Manual Operation	Light # 1	Light # 2	Light # 3	Light # 4	Light # 5	Light # 6	Light # 7	Light # 8
CR	U2 EA	1.1.2.2	U2 ISCO Sightglass Valves (4)	MCC 29-2			259-1	259-2	258-1	258-2				
CR	U2 EA	8.2.5.A	n/a	n/a	MCC 29-2	M	238-2	244-1	244-2	243-1	243-2	239-1		
CR	U3 EA	8.2.5.A	Bus 25	MCC 38-1; MCC 38-4	Start at SSD equip cart at Bus 25, North of AEER		239-3	243-1	243-2	244-1	244-2	238-2		
CR	U3 EA	1.1.2.2	Bus 25	MCC 38-1, MCC 38-4			258-1	258-2	201-1	201-2	261-2	200-1	200-2	
CR	U3 EA	1.1.1.2	n/a	n/a	MCC 38-1; MCC 38-4		309-1	309-2	309-3	T ALT #8				
CR	U3 EA	1.1.2.2	MCC 38-1, MCC 38-4	3-1301-16			200-1	200-2	264-1	264-2				
CR	U3 EA	1.1.2.3	MCC 38-1, MCC 38-4	3-1301-16			265-1	265-2						
CR	U3 EA	1.1.2.4	MCC 38-1, MCC 38-4	3-1301-16			270-1	270-2						
CR	U3 EA	1.1.2.5.A	MCC 38-1; MCC 38-4	3-1301-16			210-2							
CR	U3 EA	1.1.1.5.A	n/a	n/a	U3 ISCO 3-1301-16	M	303-1	361-1	361-2	362-1	303-2			
CR	U3 EA	1.1.2.5.A	3-1301-16	MO 3-1301-2			210-2							
CR	U3 EA	1.1.2.4	3-1301-16	MO 3-1301-2			270-1	270-2						
CR	U3 EA	1.1.1.4	3-1301-16	MO 3-1301-2			305-1	360-1						
CR	U3 EA	1.1.1.5.B	n/a	n/a	MO 3-1301-2	M	355-1	355-2						
CR	U3 EA	1.1.1.4	MO 3-1301-2	MO 3-1301-3			360-1	305-1						
CR	U3 EA	1.1.2.4	MO 3-1301-2	MO 3-1301-3			270-1	270-2	205-2					
CR	U3 EA	1.1.2.3	MO 3-1301-2	MO 3-1301-3			265-1	265-2	203-1					
CR	U3 EA	1.1.1.3	MO 3-1301-2	MO 3-1301-3			307-1	307-2	358-2	328-3				
CR	U3 EA	1.1.1.5.C	n/a	n/a	MO 3-1301-3	M	354-1	354-2						
CR	U3 EA	1.1.1.3	MO 3-1301-3	U3 ISCO Sightglass Valves (4)			307-1	307-2	358-2	328-3				
CR	U3 EA	1.1.2.3	MO 3-1301-3	U3 ISCO Sightglass Valves (4)			265-1	265-2	203-1					
CR	U3 EA	1.1.2.4	MO 3-1301-3	U3 ISCO Sightglass Valves (4)			270-1	270-2	205-2					
CR	U3 EA	1.1.2.5.A	MO 3-1301-3	U3 ISCO Sightglass Valves (4)			210-2							
CR	U3 EA	1.1.1.5.A	n/a	n/a	U3 ISCO Sightglass Valves (4)	M	203-1	361-1	361-2	362-1				
CR	HVO	8.2.5.A	Bus 25	MCC 28-3	Start at SSD equip cart at Bus 25, North of AEER		239-3	243-1	243-2	244-2	208-1			
CR	HVO	8.2.6.A	n/a	n/a	MCC 28-3		240-1	240-2						
CR	HVO	8.2.5.A	MCC 28-3	Valves 2-3999-359 & 2/3-3999-348			208-1	244-1	244-1					
CR	HVO	8.2.5.C	n/a	n/a	Valves 2-3999-359 & 2/3-3999-348		245-1	245-2	212-2	213-1	213-2	TALT #2	T ALT #3	
CR	HVO	8.2.2.A	n/a	n/a	U2 CRD Pump Room Valves (8)		233A-1	233A-2	233-1	233-2	233-3	234-1		
CR	HVO	8.2.5.C	U2 CRD Pump Room Valves (8)	MCC 25-2			241-1	241-2	213-1	213-2	245-1	245-2		
CR	HVO	8.2.5.A	n/a	n/a	MCC 25-2		244-1	244-2	243-1	243-2	239-3			
CR	HVO	8.2.5.C	MCC 25-2	MO 2-0301-2A			241-1	241-2	213-1	213-2	245-1	245-2		
CR	HVO	8.2.2.A	n/a	n/a	MO 2-0301-2A	M	233A-1	233A-2	233-1	233-2	233-3	234-1		
CR	HVO	8.2.5.C	n/a	n/a	RWCU Isolation Valves		241-1	241-2	213-1	213-2	T ALT #3			
CR	HVO	8.2.6.C	n/a	n/a	SW Valves (11)	M	214A-1	214A-2						
CR	HVO	8.2.5.C	SW Valves (11)	LI 2/3-3341-77A(B)			242A-1	242A-2	213-1	213-2	212-1	245-1	245-2	
CR	HVO	8.2.5.A	n/a	n/a	U2 Reactor Feed Pump Room		244-1	244-2	208C-2					
CR	Rad Rover	8.2.5.a	Bus 25	Outisde/ISCO Makeup Pump Room	Start at SSD equip cart at Bus 25, North of AEER		239-3							
CR	Rad Rover	18.7.2	n/a	n/a	ISCO Makeup Pump room		400A-1	400A-2	400B-1	400B-2	400C-1	400C-2		
CR	Rad Rover	outside	n/a	n/a	MUDS Building, Clean Demins Controls		N/A							
CR	Rad Rover	11.3	n/a	n/a	Cribhouse, MO 2-3906		273-1	272-1	272-3					
CR	Rad Rover	outside	n/a	n/a	2/3A CST Shed; 2/3B CST Shed		N/A							
CR	U1 EA	8.2.5.A	n/a	n/a	Start at SSD equip cart at Bus 25, North of AEER		239-3	243-1	234-2	244-1	244-2			
CR	U1 EA	8.2.5.C	n/a	n/a	Valve 3-3999-359		245-1	245-2	212-2	T ALT #3				
					CRD Pump Room Valves (8)		332A-1	332A-1	332-1	332-2	331-1	331-3		

AccessEgress Paths

SSD Path	Operator	Fire Zone	from epn	to epn	EPN Description	Manual Operation	Light # 1	Light # 2	Light # 3	Light # 4	Light # 5	Light # 6	Light # 7	Light # 8
CR	U1 EA	8 2 5.C	n/a	n/a	RWCU Isolation		340-1	340-2	213-1	213-2	T ALT #3			
CR	U1 EA	8 2 5.E	n/a	n/a	Panel 3252-78		368-2							

Volume 8

DRESDEN 2 & 3

TABLE OF CONTENTS

Tab Number	NFPA Code	NFPA Code Evaluation Title
1	4 and 4A	An Evaluation of Organization for Fire Services and Organization of a Fire Department and Supporting Letters
2	6	An Evaluation of Organization of Industrial Fire Loss Prevention
3	7	An Evaluation of Management Control of Fire Emergencies
4	8	An Evaluation of Management Responsibility of Effects of Fires on Operations
5	10 and 10A	An Evaluation of Portable Fire Extinguishers
6	12, 12A, 13, 15, 20, and 24	Fire Suppression Survey and PLC Supporting Letters
7	14	An Evaluation of Standard for the Installation of Standpipe and Hose Systems
8	20	Routine Fire Pump Test Frequencies
9	24	Outside Protection Survey
10	26	Fire Suppression System Valve Supervision Survey and Supporting Letters
11	27	An Evaluation of Organization, Training and Equipment of Private Fire Brigades
12	30 and 49	An Evaluation of Flammable Combustible and Highly Reactive Chemical Storage and Handling
13	50A, 50B, and 69	A Survey of the Fire Hazards of Hydrogen Storage and Handling
14	51 and 51B	An Evaluation of the Fire Hazards of Cutting and Welding Processes
15	70	Applicability of NFPA 70
16	72D	NFPA Code Review of Standard for the Installation, Maintenance, and Use of Proprietary Protective Signaling Systems (NFPA 72D-1979) and PLC Supporting Letters
	72E	Fire Protection and Alarm Survey
17	78	Lightning Protection Survey
18	80	An Analysis of Fire Doors in Nuclear Areas Professional Loss Control Supporting Letters

DRESDEN 2 & 3

TABLE OF CONTENTS

Tab Number	NFPA Code	NFPA Code Evaluation Title
19	90A	Fire Protection Survey of HVAC Systems Installed in Computer and Nuclear Safety-Related Areas Professional Loss Control Supporting Letters
20	92M	Floor Drainage Survey
21	194 and 196	An Evaluation of Screw Threads and Gaskets for Fire Hose Connections and Standard for Fire Hose
22	197	An Evaluation of a Training Standard on Initial Fire Attack
23	232	An Evaluation of Records Storage
24	251 and 255	Applicability of NFPA 251 and NFPA 255
25	601	An Evaluation of the Security Force Response to Fire Emergencies
26	NA	A Review of Fire Suppression System Surveillance Procedures for Compliance with NFPA Standards 12, 12A, 13, 15, 20 and 24.
27	NA	A Review of Fire Detection and Alarm System Surveillance Procedure for Compliance with NFPA Standards 72D and 72 E
28	NA	NFPA Code Open Item Closure
29	NA	NFPA Code Compliance Matrices
30	NA	Dresden 2 & 3 Applicable NFPA Code

DRESDEN 2 & 3

FIRE PROTECTION PROGRAM DOCUMENTATION PACKAGE

Volume Index

Volume 8 – NFPA Code Conformance

1 An Evaluation of Organization for Fire Services and Organization of a Fire Department

2 An Evaluation of Organization of Industrial Fire Loss Prevention

3 An Evaluation of Management Control of Fire Emergencies

4 An Evaluation of Management Responsibility for Effects of Fires on Operations

5 An Evaluation of Portable Fire Extinguishers

6 Fire Suppression Survey

Professional Loss Control Supporting Letters

7 An Evaluation of Standard for the Installation of Standpipe and Hose Systems

8 Routine Fire Pump Test Frequencies

9 Outside Protection Survey

10 Fire Suppression System Valve Supervision Survey

11 An Evaluation of Organization, Training and Equipment of Private Fire Brigades

12 An Evaluation of Flammable Combustible and Highly Reactive Chemical Storage and Handling

13 A Survey of the Fire Hazards of Hydrogen Storage and Handling

14 An Evaluation of the Fire Hazards of Cutting and Welding Process

15 Applicability of NFPA 70

Memorandum

ComEd

Date: December 7, 1999

To: Albert Casillo/Robert Bandura
Design Engineering
Fire Protection

From: M. Dillon
System Engineer
Fire Protection

Subject: Routine Fire Pump Tests

The attached document (DG99-000027) provides for the change in surveillance frequency for the fire pumps. This change is a fire code deviation which must be included in the next update to the Fire Protection Program Document Package (FPPDP).
Per DG99-000027 the change should be added to the NFPA Code Deviation Report section of the FPPDP.

ATT 202356-01

DG99-000027 provides the justification and evaluation needed for the code deviation, Operations has changed the frequency and predefine related to the fire pump tests.

Document ID #DG99-000027

January 11, 1998

To: NGG Station Managers

Subject: Routine Fire Pump Test Frequency Evaluation

Please find the subject evaluation attached. The evaluation concludes that the routine fire pump operating test (including visual inspection) and battery check surveillance frequencies may be changed from once per 7 days to once per 31 days. Implementing the proposed changes will result in a significant resource reduction while not adversely impacting post fire safe shutdown capability or fire pump reliability.

Therefore, as described in the attached evaluation, each site should implement the routine weekly fire pump-testing program to monthly described in the attached evaluation in a manner similar to the following, as applicable to your site:

1. Confirm that the general condition of the fire pump rooms / assemblies are routinely observed during operator rounds (i.e., at least weekly).

2. Revise the once per 7-day fire pump test surveillance procedure (and pre-define) to reflect the once per 31-day frequency.

3.a Revise the ATR to change the battery bank checks from once per 7 days to once per 31 days.

3.b Revise the once per 7-day fire pump battery surveillance procedure and pre-define to reflect the once per 31-day frequency.

4. Revise the NFPA Code Deviation Report to reflect the deviations described in the attached evaluation. Since this evaluation identifies and documents the justification for the deviations, updating the report is not required prior to implementing the changes. However, an NTS (or other tracking) item should be initiated to ensure the report is updated during the next scheduled update.

Please note that in accordance with the standard fire protection license condition, implementing the proposed changes will require the completion of a 50.59 safety evaluation(s). The justifications in the attached evaluation should be used when preparing the safety evaluation.

Please contact me at Downers Grove extension 8-347-7636 if you need any assistance.

Daniel J. Roberts
Fire Protection Engineer
NGG Operations

Cc: R. Deppi, D. Leggett, R. Wegner, M. Snow, S. Barrett, D. Farr, M. McDowell, R. Landrum, R. Vickers, W.Collins, M. Anjum, B.Boyle, R. Thorin, R. Scheidecker, J. Brownell, R. Mitton, M. Dillon, R. Burns, E. Ballou.

Routine Fire Pump Test Frequencies

1.0 PURPOSE

The purpose of this evaluation is to determine if changing the frequency of the routine fire pump operating test and battery check surveillance frequencies from once per 7 days to once per 31 days is acceptable.

2.0 SCOPE

2.1 This evaluation is generic to all NGG facilities.

3.0 LICENSING AND DESIGN BASIS COMTTMENTS

3.1 Site Fire Protection Administrative Technical Requirements.
3.2 Standard Fire Protection License Conditions.

4.0 REFERENCES

4.1 NFPA 20, the "Standard for the Installation of Centrifugal Fire Pumps," 1993 Edition.
4.2 NFPA 25, "Inspection, Testing and Maintenance of Water-Based Fire Protection Systems." 1995 Edition.
4.3 NEIL Property Loss Prevention Standards.
4.4 Generic Letter 86-10, "Implementation of Fire Protection Requirements."
4.5 NES-MS-5.3, "86-10 Evaluation Standard."
4.6 IEEE Standard 450 - 1995, "Recommended Practice for Maintenance, Testing, and Replacement of Vented Lead-Acid Batteries for Station Applications."

5.0 DESCRIPTION

The Fire Protection Administrative Technical Requirements (and their precursor, the Plant Fire Protection Technical Specifications) for each site require that:

- Each diesel (electric motor) driven fire pump be demonstrated operable by starting the pump from ambient conditions and operating in the recirculation mode for at least 30 (15) minutes at least once per 31 days, and

- The diesel fire pump battery banks be demonstrated operable by verifying electrolyte level, specific gravity (LaSalle only), and overall battery voltage at least once per 7 days (monthly at Quad Cities).

However, contrary to the ATR minimum requirement of once per 31 days, all applicable editions of NFPA 20, the "Standard for the Installation of Centrifugal Fire Pumps," require that the pump be started and operated weekly. In addition, NFPA 20 also requires a weekly visual inspection of the pump assembly, including battery checks. As a result, contrary to the ATR requirement of once per 31 days, the routine fire pump-operating test (including visual inspection) and battery check surveillance at ComEd sites have historically been conducted at least once per 7 days.

6.0 JUSTIFICATION / EVALUATION

Generic Letter 86-10 states that deviations from the NFPA codes should be identified and justified. In addition, the standard fire protection license condition for each site allows changes to the approved fire protection program provided the change does not adversely impact post fire safe shutdown.

Per NFPA 20, the primary purpose of periodically operating the fire pump in the recirculation mode is to ensure automatic or manual operation upon demand and continuous delivery of the required system output. An additional purpose is to detect deficiencies of the pump assembly not evident by inspection. The purpose of the visual inspection, including the battery checks, is to ensure that the pump assembly appears to be in operating condition and is free from physical damage.

Therefore, extending the surveillance frequency of the routine fire pump operating test (including visual inspection) and battery check surveillance frequencies from once per 7 days to once per 31 days is an ACCEPTABLE deviation to NFPA 20, and will not adversely impact post fire safe shutdown, because:

- The intent of the NFPA requirements will be satisfied. Specifically, the automatic or manual operation upon demand and continuous delivery of the required system output will be ensured. In addition, fire pump performance and reliability at each site, except Zion, is tracked and trended in accordance with the Maintenance Rule Program, and any deficiencies encountered are documented and corrected in accordance with the site Surveillance and/or Corrective Action Programs. As a result, the impact of performing the routine fire pump test, visual inspection, and battery surveillance's once per 31 days (rather than once per 7 days) will be monitored and acted upon to maintain reliability, if necessary. Therefore, fire pump reliability, including any necessary adjustments to the surveillance frequencies based on future performance, is ensured.

- The fire pump rooms / assemblies are routinely observed during "operator rounds." Station operators who are trained and qualified to identify deficient conditions and operate the pumps perform the observation. Therefore, the NFPA intent of ensuring that the pump assembly appears to be in operating condition and is free from physical damage by conducting weekly inspections is satisfied.

- Performing routine fire pump operating tests, visual inspection, and battery surveillance once per 31 days satisfies the nuclear insurance (i.e., NEIL) inspection, test and maintenance requirements. Generally, the NEIL requirements for inspection, test and maintenance of fire protection systems/equipment are based on NFPA requirements. However, some deviate from the appropriate NFPA reference and frequency. Specifically, these deviations (i.e., 31 days rather than 7 days) were deemed acceptable in recognition of the unique nature of nuclear power plants and the impracticality of performing some inspection, testing and maintenance at the prescribed NFPA frequency.

- Section 4.3.1 of IEEE Standard 450 - 1995, "Recommended Practice for Maintenance, Testing, and Replacement of Vented Lead-Acid Batteries for Station Applications," states that batteries should be inspected "on a regularly scheduled basis (at least once per month)."

- Zion Station has permanently ceased operations and the fuel has been permanently removed from the reactor vessel(s). Therefore, the number of active fire hazards (i.e., energized cables, rotating equipment containing oil, etc.) and the consequences of a fire occurrence (i.e., no impact on power operation or achieving post fire safe shutdown, etc) have been substantially reduced.

Prepared by: _____ 1/..99
Daniel J. Roberts
Fire Protection Engineer
NGG Operations

Reviewed by: _____
Stanley Chingo
Fire Protection Engineer
M&S Engineering

Volume 9

DRESDEN 2 & 3

FIRE PROTECTION PROGRAM DOCUMENTATION PACKAGE

Volume Index

Volume 9 – NFPA Code Conformance (Continued)

16
- A NFPA Code Review of Standard for the Installation, Maintenance, and Use of Proprietary Protective Signaling Systems
- B Fire Detection and Alarm Survey
- C Protectowire Line-Type Fire Detector
- D Professional Loss Control Supporting Letters

17 Lightning Protection Survey
18 An Analysis of Fire Doors in Nuclear Areas
Professional Loss Control Supporting Letters
19 Fire Protection Survey of HVAC Systems Installed in Computer and Nuclear Safety-Related Areas
Professional Loss Control Supporting Letters
20 Floor Drainage Survey
21 An Evaluation of Screw Threads and Gaskets for Fire Hose Connections and Standard for Fire Hose
22 An Evaluation of a Training Standard on Initial Fire Attack
23 An Evaluation of Records Storage
24 Applicability of NFPA 251 and NFPA 255
25 An Evaluation of the Security Force Response to Fire Emergencies
26 A Review of Fire Suppression System Surveillance Procedures for Compliance with NFPA Standards 12, 12A, 13, 15, 20 and 24.
27 A Review of Fire Detection and Alarm System Surveillance Procedure for Compliance with NFPA Standards 72D and 72 E
28 NFPA Code Open Item Closure
29 NFPA Code Compliance Matrices
30 Dresden 2 & 3 Applicable NFPA Code