Draft TWG Report + Completion Status dtd 8/30/00

Last Update: August 30, 2000 (9:30AM)

TWG Report Completion Status (by Report Section)

	Complete or Expecting Further Revisions	Responsible Person for providing revisions:
Cover Letter	Expecting Further Revisions	George/Diane
Main text (Body of report)	Expecting Further Revisions	T. Collins/ B. Palla/G. Kelly
References/Abbreviations	Expecting Further Revisions	Tanya
Appendix 1 - Thermal Hydraulics	Expecting Further Revisions	J. Staudenmeier
Appendix 2 - PRA/HRA	Expecting Further Revisions	G. Kelly
Appendix 2b- Seismic	Expecting Further Revisions	Goutam/Glenn Kelly
Kennedy Report	Complete	
Seismic Checklist	Complete	
Appendix 2c - Heavy Loads	Complete	
Appendix 2d - Aircrafts	Complete	
Appendix 2e - Tornados	Complete	
Appendix 3 - Criticality	Complete	
Appendix 4 - Consequences	Complete	
Appendix 4a - Attachment to App. 4	Complete	
Appendix 4b (rev.3) -PPG	Expecting Further Revisions	B. Palla
Appendix 5 - NEI Committment Letter	Complete	
Appendix 6 - Public Comments	Expecting Further Revisions	George/Tanya/Diane

*Highlighted rows are areas of the report where further revisions are expected.

G:\SPLB\SECTIONA\DECOM.GRP\FinalReport\summary report status.wpd

Q/267

February 14, 2000

MEMORANDUM TO: Chairman Meserve
Commissioner Dicus
Commissioner Diaz
Commissioner McGaffigan
Commissioner Merrifield

FROM: William D. Travers ***/RA by Frank J. Miraglia Acting For/***
Executive Director for Operations

SUBJECT: DRAFT FINAL TECHNICAL STUDY ON SPENT FUEL POOL ACCIDENT RISK AT DECOMMISSIONING NUCLEAR POWER PLANTS

In March 1999, the NRC staff met with the Commission to discuss an ongoing effort to improve decommissioning regulations. An area of particular interest to the Commission was the perception that the risks at decommissioning nuclear power plants are very low yet many of the regulations governing decommissioning plants remain the same as those required for operating reactors. The staff proposed to take a risk-informed look at power reactor decommissioning requirements and to use the risk insights derived from this review to guide the promulgation of new regulations. The staff subsequently initiated a technical study on spent fuel pool accident risks at decommissioning plants. A preliminary study was completed in June 1999 and concluded that the risks at decommissioning nuclear power plants with recently irradiated fuel in the spent fuel pool could not be dismissed as low when compared to operating reactors due to the frequency and consequences of postulated events leading to drainage of the spent fuel pool and a subsequent zirconium fire. The staff then performed a more comprehensive study to better quantify the risk from a decommissioning nuclear power plant spent fuel pool and provide recommendations, where appropriate, on the factors that have the biggest impact on the risk. The results of the study are intended to support rulemaking in regulatory areas such as emergency planning, safeguards, and insurance for decommissioning plants. The details of this effort are discussed in SECY-99-168, "Improving Decommissioning Regulations for Nuclear Power Plants," dated June 30, 1999.

The staff has now completed a review and requantification of its preliminary risk assessment including independent outside technical review of its analyses and assumptions. Substantial efforts to involve public and industry representatives throughout this effort have been expended. The NRC solicited feedback on its June study assumptions and methods and held numerous public meetings including a 2-day public workshop. Attached for your information is the draft final technical study on spent fuel pool accident risks at decommissioning nuclear power plants.

CONTACTS: George Hubbard, NRR/DSSA/SPLB
301-415-2870
Mark Rubin, NRR/DSSA/SPSB
301-415-3234

After a period of one year following permanent shutdown, the results of this report estimated the generic frequency of events leading to zirconium fires at decommissioning plants to be less than $3x10^{-6}$ per year for a plant that implements the design and operational characteristics assumed in the risk assessment performed by the staff. This frequency was estimated based on the assumption that the industry commitments plus additional staff assumptions would be implemented. This estimate could be much higher for a plant that does not implement these operational characteristics. The most significant contributor to this risk is a seismic event which exceeds the design basis earthquake. However, the overall frequency of this event is within the staff developed spent fuel pool performance guideline for large radionuclide releases (related to a zirconium fire) of $1x10^{-5}$ per year.

The focus of this report is the risk associated with wet storage of spent fuel during decommissioning. However, during this study, the staff was alert to any implications on the storage of spent fuel during power operation. With regard to power operation, the resolution of Generic Issue (GI) 82, "Beyond Design Basis Accidents in Spent Fuel Pools," and other studies of operating reactor spent fuel pools concluded that existing requirements for operating reactor spent fuel pools are sufficient. During this study, the staff evaluated one additional issue concerning the drop of a cask on the spent fuel pool floor. Due to the industry's commitment to Phase II of NUREG-0612, "Control of Heavy Loads at Nuclear Power Plants, Resolution of Generic Technical Activity A-36," this is not a concern for decommissioning reactors.

Operating reactors are not required to implement Phase II of NUREG-0612. The risk for spent fuel pools at operating plants is limited by the lower expected frequency of heavy load lifts as compared to decommissioning plants. Nonetheless, this issue will be further examined as part of the Office of Nuclear Regulatory Research's prioritization of Generic Safety Issue 186, "Potential Risk and Consequences of Heavy Load Drops in Nuclear Power Plants," which was accepted in May 1999.

Concurrent with providing the Commission a copy of this draft report, the staff will be issuing it for public comment via the Federal Register and an NRC web page. Following resolution of any Commission and public comments and review by the ACRS, the staff will publish the final report

in May 2000. The staff will utilize the industry commitments and the conclusions in this report to support an integrated decommissioning rulemaking plan to be submitted in June 2000 and develop interim guidance for any future plants that elect to decommission prior to establishing revised regulations.

Attachment: Draft Final Study on Spent Fuel Pool Accident Risk at Decommissioning Nuclear Power Plants

cc w/att: SECY
OGC
OCA
OPA
CFO
CIO

in May 2000. The staff will utilize the industry commitments and the conclusions in this report to support an integrated decommissioning rulemaking plan to be submitted in June 2000 and develop interim guidance for any future plants that elect to decommission prior to establishing revised regulations.

Attachment: Draft Final Study on Spent Fuel Pool Accident Risk at Decommissioning Nuclear Power Plants

cc w/att: SECY
OGC
OCA
OPA
CFO
CIO

DISTRIBUTION:

File Center	EDO r/f	FMiraglia	SCollins/RZimmerman		MTschiltzPDIV-D r/f
WHuffman	RDudley	AThadani	GHubbard	ACRS	BZalcman MMalloy
FKantor	RRosano	LCamper	TEaton	DJackson	JJohnson (ADIP)

NRR Mailroom (WITS 199900131)
PMagnanelli (WITS 199900131)

ACCESSION NUMBER: ML003680337 TEMPLATE NUMBER: EDO-004 *See previous concurrence

To receive a copy of this document, indicate "C" in the box

OFFICE	SPLB/SC	C	Tech ED	C	SPLB/BC	C	SRSB/SC	C	SRSB/BC	C
NAME	GHubbard *		*		JHannon *		MRubin*		RBarrett *	
DATE	02/ 02 / 00		02/ 02 / 00		02/ 02 / 00		02/ 02 / 00		02/ 02 / 00	

To receive a copy of this document, indicate "C" in the box

OFFICE	SRXB/BC	C	RGEB/BC	C	DE	C	DE/D	C	IOLB/BC	C
NAME	JWermiel *		CCarpenter *		GBagchi *		JStrosnider *		HChristensen*	
DATE	01 / 21 / 00		02/ 03 / 00		02/ 02 / 00		02/ 02 / 00		02 / 03 / 00	

To receive a copy of this document, indicate "C" in the box

OFFICE	DSSA/D	C	PDIV-D/D		DLPM/D		RES		DCB (NMSS)	
NAME	GHolahan *		SRichards *		JZwolinski*		AThadani*		LWCamper *	
DATE	02/ 03 / 00		02/ 02 / 00		02/04/00		02/04/00		02/ 02 / 00	

To receive a copy of this document, indicate "C" in the box

OFFICE	ADPT/NRR		NRR/D		EDO			
NAME	BSheron*		SCollins*		WTravers			
DATE	02/04/00		2/4/00		2/14/00			

DOCUMENT NAME: G:\SPLB\SECTIONA\DECOM.GRP\FinalOutput\FinalSFPReport417.WPD
OFFICIAL RECORD COPY

Final Technical Study of Spent Fuel Pool Accident Risk at Decommissioning Nuclear Power Plants

August 2000

Technical Contributors

Group Leaders:	Diane Jackson, DSSA/SPLB
	Tanya Eaton, DSSA/SPLB
	George Hubbard, DSSA/SPLB
Risk Assessment:	Glenn Kelly, DSSA/SPSB
	Michael Cheok, DSSA/SPSB
	Gareth Parry, DSSA
	Mark Rubin, DSSA

Primary Technical Support:

Seismic	Goutam Bagchi, DE
	Robert Rothman, DE/EMEB
Criticality	Larry Kopp, DSSA/SRXB
	Anthony Ulses, DSSA/SRXB
Thermal Hydraulics	Joseph Staudenmeier, DSSA/SRXB
	Christopher Boyd, RES/DSARE/SMSAB
Consequences	Jason Schaperow, RES/DSARE/SMSAB
Heavy Loads	Edward Throm, DSSA/SPSB

Secondary Technical Support:

Safeguards	Robert Skelton, DIPM/IOLB
Emergency Preparedness	James O'Brien, DIPM/IOLB

Technical Study of Spent Fuel Pool Accidents for Decommissioning Plants

Table of Contents

Executive Summary 1

1.0 Introduction 4

2.0 Risk-Informed Decision Making 5
- 2.1 Principles of Regulatory Guide 1.174 6
  - 2.1.1 Defense-in-Depth 7
  - 2.1.2 Safety Margins 8
  - 2.1.3 Impact of Proposed Changes 8
  - 2.1.4 Implementation and Monitoring Program 8

3.0 Risk Assessment of Spent Fuel Pools at Decommissioning Plants 9
- 3.1 Basis and Findings of SFP Risk Assessment 11
- 3.2 Characteristics of SFP Design and Operations for a Decommissioning Plant . 12
- 3.3 Internal Event Scenarios Leading to Fuel Uncovery 18
  - 3.3.1 Loss of Cooling 18
  - 3.3.2 Loss of Coolant Inventory 19
  - 3.3.3 Loss of Off-site Power from Plant-Centered and Grid Related Events 20
  - 3.3.4 Loss of Off-site Power from Severe Weather Events 20
  - 3.3.5 Internal Fire 21
  - 3.3.6 Heavy Load Drops 21
- 3.4 Beyond Design Basis Spent Fuel Pool Accident Scenarios (External Events) . 23
  - 3.4.1 Seismic Events 23
  - 3.4.2 Aircraft Crashes 25
  - 3.4.3 Tornadoes 25
  - 3.4.4 Criticality in Spent Fuel Pool 26

4.0 Implications of Spent Fuel Pool Risk For Regulatory Requirements 28
- 4.1. Summary of the Technical Results 29
- 4.2 Risk Impact of Specific Design and Operational Characteristics 29
  - 4.2.1. Impact of Proposed Changes 30
  - 4.2.2. Defense-in-Depth 32
  - 4.2.3 Safety Margins 32
  - 4.2.4. Implementation and Monitoring Program 32
- 4.3. Implications for Regulatory Requirements Related to Emergency Preparedness, Security and Insurance 33
  - 4.3.1 Emergency Preparedness 33
  - 4.3.2 Security 35
  - 4.3.3 Insurance 36

5.0 Summary and Conclusions 37

6.0 References 39

7.0 Acronyms 41

Appendices

Appendix 1 Thermal Hydraulics A1-1

Appendix 2 Assessment of Spent Fuel Pool Risk at Decommissioning Plants A2-1

Appendix 2a Detailed Assessment of Risk from Decommissioning Plant Spent Fuel Pools A2a-1
Appendix 2b Structural Integrity of Spent Fuel Pools Subject to Seismic Loads . . A2b-1
Appendix 2c Structural Integrity of Spent Fuel Pool Structures Subject to Heavy Loads Drops A2c-1
Appendix 2d Structural Integrity of Spent Fuel Pool Structures Subject to Aircraft Crashes A2d-1
Appendix 2e Structural Integrity of Spent Fuel Pool Structures Subject to Tornados A2e-1

Appendix 3 Criticality A3-1

Appendix 4 Consequence Assessment from Zirconium Fire A4-1

Appendix 5 Enhanced Seismic Checklist and Supporting Stakeholder Documentation . . . A5-1

Appendix 6 November 12, 1999 Nuclear Energy Institute Commitment Letter A6-1

Appendix 7 Stakeholder Interactions A7-1

List of Figures

Figure 3.1 Assumed Spent Fuel Pool Cooling System 13

List of Tables

Table 3.1 Spent Fuel Pool Cooling Risk Analysis Frequency of Fuel Uncovery (per year) . . . 16

Executive Summary

This report documents an evaluation of spent fuel pool (SFP) accident risks at decommissioning plants. It was done to provide an interim, risk-informed technical basis for reviewing exemption requests, and to provide a regulatory framework for integrated rulemaking. The application of this report is intended to eliminate to the extent practical, unnecessary regulatory burden, while maintaining safety and improving efficiency and effectiveness of the regulatory process. By establishing a consistent, predictable process fully open to public observation and comment, the agency intends to enhance public confidence in the regulatory process for decommissioning reactors. The report was initiated by the Commission when they asked the staff to consider whether the risk from decommissioning plants was low enough to justify generic regulatory relief in the areas of emergency planning, insurance indemnification and safeguards.

The current body of NRC regulations pertaining to light-water reactors (10 CFR 50) [Ref. 1] is primarily directed towards the safety of operating units. It is generally understood that this body of regulations is conservative when a plant transitions from an operating to a decommissioning status. In the past, decommissioning plants have requested exemptions to certain regulations as a result of their permanently defueled condition. When evaluating the acceptability of exemption requests from regulations for permanently shutdown plants, the staff has assessed the susceptibility of the spent fuel to a zirconium fire accident. To date, exemptions have been granted on a plant-specific basis, resulting in different analyses and criteria being used for the basis of the exemptions. In some cases, heat up evaluations of the spent fuel cooled only by air were requested. This criterion was used because of national laboratory studies that had identified the potential concern for a significant off-site radiological release from a zirconium fire which could occur when all water is lost from the spent fuel pool. A clad temperature of 565°C, based on the onset of clad swelling, was used as a limit to ensure no radiological release.

In March 1999, the staff formed a technical working group to evaluate spent fuel pool accident risks at decommissioning plants. A two month effort was launched to review the available technical information and methods and identify areas in need of further work. A substantial effort was made to involve public and industry representatives throughout the entire effort. A series of public meetings was held with stakeholders during and following the generation of a preliminary draft study that was published in June at the request of the Nuclear Energy Institute (NEI). The partially completed DRAFT report was released to facilitate a stakeholder/NRC two day workshop that was held in July 1999. Information gained at the workshop and through other stakeholder interactions was constructive in completing this report.

Estimates of the risk from heavy load handling accidents were revised and criticality concerns were addressed in response to stakeholder feedback. A checklist was developed to establish seismic capability of SFPs, and industry commitments were documented to address the vulnerabilities that had been identified by the June 1999 draft report. Independent technical quality reviews of controversial aspects of the report were initiated to bring in outside expert opinion on the details of the report. These experts evaluated several areas of the report, including the human reliability analysis, seismic considerations, thermal-hydraulic calculations, and probabilistic risk assessment (PRA) assumptions and treatment. The PRA results were re-quantified to take into account the industry commitments to reduce risk vulnerabilities.

This report contains the results of these activities and includes three main outputs. The first is a discussion in Section 2 on how risk-informed decision making can be applied to decommissioning plants. The second is a summary in Section 3 of the risk assessment of SFPs at decommissioning plants. The third output or Section 4 provides the implications of SFP risks on regulatory requirements, and outlines where industry commitments in combination with additional staff assumptions may be useful in improving spent fuel pool safety at decommissioning plants. Section 5 is a summary of the findings of the report.

After a period of one year following permanent shutdown, the results of this report estimated the generic frequency of events leading to zirconium fires at decommissioning plants to be less than $3x10^{-6}$ per year for a plant that implements the design and operational characteristics assumed in the risk assessment performed by the staff. This frequency was estimated based on the assumptions that the characteristics of the ten industry decommissioning commitments (IDCs) proposed by NEI (See Appendix 6) and the four staff decommissioning assumptions (SDAs) identified in Sections 3 and 4 of the report would be implemented. This estimate could be much higher for a plant that does not implement these characteristics. The most significant contributor to this risk is a seismic event which exceeds the design basis earthquake. However, the overall frequency of this event is within the staff recommended pool performance guideline (PPG) identified in this report for large radiological releases due to a zirconium fire of $1x10^{-5}$ per year. As discussed below, zirconium fires are estimated to be similar to large early release accidents postulated for operating reactors in some ways, but less severe in others.

The thermal-hydraulic analysis presented in Appendix 1 demonstrates that the decay heat necessary for a zirconium fire exists in typical spent fuel pools of decommissioning plants for a period of several years following shutdown. The analysis shows that the length of time over which the fuel is vulnerable depends on several factors, including fuel burn-up and fuel storage configuration in the SFP. In some cases analyzed in Appendix 1, the required decay time to preclude a zirconium fire is 5 years[1]. However, the exact time will be plant specific; therefore, plant-specific analysis would be needed to demonstrate shorter zirconium fire vulnerabilities.

The consequence analysis presented in Appendix 4 demonstrates that the consequences of a zirconium fire in a decommissioning plant can be very large. The integrated dose to the public is generally comparable to a large early release from an operating plant during a potential severe core damage accident and early fatalities are very sensitive to the effectiveness of evacuation. For a decommissioning plant with about one year of decay time, the onset of radiological releases from a zirconium fire is significantly delayed compared to those from the most limiting operating reactor accident scenarios. This is due to the relatively long heat up time of the fuel. For many of the sequences leading to zirconium fires, there are very large delay times due to the long time required to boil off the large spent fuel pool water inventory.

---

[1]In the area of dry storage, it is noted that currently certified casks may be loaded with spent fuel with a minimum of five years cooling. The risk of a zirconium fire in dry cask storage is largely eliminated by limiting the maximum fuel cladding temperature and minimizing the oxygen available. The temperature is explicitly modeled using bounding fuel characteristics. The maximum clad temperature occurs during vacuum drying when little oxygen is available and the fuel is in an inert environment for storage.

Thus, while the consequences of zirconium fires are in some ways comparable to large early releases from postulated reactor accidents, the time of release occurs much later following initiation of the accident. Therefore, this analysis indicates that for the slowly evolving SFP accident scenarios at decommissioning plants, there is a large amount of time to initiate and implement protective actions, including public evacuation in comparison to operating reactor accident sequences.

In summary, the risk assessment shows low numerical risk results in combination with satisfaction of the safety principles as described in R.G. 1.174, such as defense-in-depth, maintaining safety margins, and performance monitoring. The staff concludes that under the assumptions of this study there is a low level of public risk from SFP accidents at decommissioning plants. In addition, the study shows that, after a period of one year following final shutdown, the low likelihood that a zirconium fire would occur, in combination with the long time frames available for taking off-site protective actions, provides a basis for relaxation of emergency planning requirements.

Section 4 also addresses the report's implications on security and insurance provisions at decommissioning plants. For security, the risk insights can be utilized to assess what target sets are important to protect against sabotage. However, any reduction in security provisions would be constrained by an effectiveness assessment of the safeguards provisions against a design basis threat. Therefore, the staff concludes that some level of security is required as long as the fuel in the SFP is exposed to a sabotage threat. For insurance, the reports points out that no definitive criteria exists that would allow relaxation on the basis of low event probability alone while the potential for a zirconium fire exists. Finally, inconsistencies were identified in current regulations regarding vehicle-borne bomb threats and insurance indemnification requirements for ISFSIs and decommissioning nuclear power plants. These inconsistencies should be revisited during the overall integration of rules for decommissioning plants.

In summary, the report provides a comprehensive treatment of SFP risks at decommissioning plants as it relates to emergency planning, insurance, and security requirements. The report systematically examines the differences between an operating reactor spent fuel pool configuration, and the typical SFP configuration in place at one year post-shutdown for a decommissioning plant. It provides the technical basis for determining the regulatory requirements for decommissioning plants using risk-informed decision making.

1.0 Introduction

The current body of Nuclear Regulatory Commission (NRC) regulations pertaining to light-water reactors (10 CFR 50) [Ref. 1] is primarily directed towards the safety of operating units. As some reactors have reached permanent shutdown condition and entered decommissioning status, the NRC has been faced with establishing the appropriate requirements and regulatory oversight necessary to provide adequate protection to the public. For decommissioning plants, the potential public risk is due primarily to the possibility of a zirconium fire associated with the spent fuel rod cladding. Due to the decay heat generated by the spent fuel, it must be continuously cooled and remain covered by water after removal from the reactor. A postulated event could occur if the systems which provide heat removal from the fuel pool fail, causing the cooling water to boil off from the pool until the fuel is uncovered. Alternatively, a leak in the pool could occur, that if not corrected, could also result in the spent reactor fuel becoming uncovered. For either scenario, the uncovered and uncooled spent fuel could heat up causing a fire of its zirconium cladding and releasing large quantities of radionuclides.

Decommissioning plants have requested exemptions to certain regulations as a result of their permanently defueled condition. While the current Part 50 regulatory requirements (developed for operating reactors) ensure safety at the decommissioning facility, some of these requirements may be excessive and not substantially contributing to public safety. Areas where regulatory relief has been requested in the past include exemptions from off-site emergency planning (EP), insurance, and safeguards requirements. Requests for consideration of changes in regulatory requirements are appropriate since the traditional accident sequences that dominate operating reactor risk are no longer applicable. For a defueled reactor in decommissioning status, public risk is predominantly from potential accidents involving spent fuel. Spent fuel can be stored in the spent fuel pool (SFP) for considerable periods of time, as remaining portions of the plant continue through decommissioning and disassembly. To date, exemptions have been requested and granted on a plant-specific basis. This has resulted in some lack of consistency and uniformity in the scope of evaluations conducted and acceptance criteria applied in processing the exemption requests.

To improve regulatory consistency and predictability, the NRC has undertaken this effort to improve the regulatory framework applicable to decommissioning plants. This framework will utilize risk-informed approaches to identify the design and operational features necessary to ensure that risks to the public from these shutdown facilities are sufficiently small. This framework will form the foundation upon which regulatory changes will be developed, as well as the basis for requesting and approving exemption requests in the interim, until the necessary rulemaking is completed.

In support of this objective, the NRC staff has completed a draft assessment of spent fuel pool risks. This assessment utilized probabilistic risk assessment (PRA) methods and was developed from analytical studies in the areas of thermal hydraulics, core physics, systems analysis, human reliability analysis, seismic and structural analysis, external hazards assessment, and off-site radiological consequences. The focus of the risk assessment was to identify potential severe accident scenarios at decommissioning plants, and to estimate the likelihood and consequences of these scenarios. Of primary concern are events that lead to loss of spent fuel pool water inventory or loss of cooling to the spent fuel assemblies, and

events that result in fuel configurations that could lead to criticality conditions. For some period after reactor shutdown and after sustained loss of inventory or cooling, it is possible for the fuel to heat up to the point where rapid oxidation and burning of the zirconium fuel cladding occurs leading to significant releases of radionuclides.

A preliminary version of this draft report was issued for public comment and technical review in June 1999. Comments received from stakeholders and other technical reviewers have been considered in preparing this assessment. Quality assessment of the staff's preliminary analysis has been aided by a small panel of human reliability analysis (HRA) experts who evaluated the human performance analysis assumptions, methods and modeling, as well as a broad quality review carried out at the Idaho National Engineering & Environmental Laboratory (INEEL).

The conclusions and findings of the study provide guidance for the design and operation of spent fuel pool cooling and inventory make-up systems as well as practices and procedures necessary to ensure high levels of operator performance during off-normal conditions. This report concludes that, with the fulfillment of industry commitments and satisfaction of a number of additional staff assumptions, the risks from spent fuel pools will be sufficiently small to justify exemptions from selected current regulatory requirements and to form the basis for related rulemaking.

This report is divided into three main parts. The first is a discussion in Section 2 on how risk-informed decision making can be applied to decommissioning plants. The second is a summary in Section 3 of the risk assessment of SFPs at decommissioning plants. The third in Section 4 provides the implications of SFP risk on regulatory requirements, and outlines where industry commitments in combination with additional staff assumptions may be useful in improving spent fuel pool safety.

2.0 Risk-Informed Decision Making

The regulatory framework proposed in this report for decommissioning plants is based on a risk-informed process. In 1995, the NRC published its PRA Policy Statement [Ref 1], which stated that the use of PRA technology should be increased in all regulatory matters to the extent supported by the state-of-the-art of the methods. Probabilistic risk assessment provides a structured analytical method to assess the various combinations of failures and events that result in undesirable consequences, such as core damage in an operating reactor. The end points of PRAs can be extended to include public health effects by modeling the timing and mode of containment failure and radioactive releases to the environment.

Subsequent to issuance of the PRA Policy Statement, the agency published Regulatory Guide (RG) 1.174 [Ref.2] which contained general guidance for application of PRA insights to the regulation of nuclear reactors. The guidelines in RG 1.174 pertain to the frequency of core damage accidents (CDF) and large early releases (LERF). For both CDF and LERF, RG 1.174 contains guidance on acceptable values for the changes that can be allowed due to regulatory decisions as a function of the baseline frequencies. For example, if the baseline CDF for a plant is below $1x10^{-4}$ per year, plant changes can be approved that increase CDF by up to $1x10^{-5}$ per year. If the baseline LERF is less than $1x10^{-5}$ per year, plant changes can be approved which increase LERF by $1x10^{-6}$ per year.

For decommissioning plants, the risk is primarily due to the possibility of a zirconium fire associated with the spent fuel rod cladding[2]. The consequences of such an event do not equate exactly to either a core damage accident or a large early release[3]. Zirconium fires in spent fuel pools potentially have more severe long term consequences than an operating reactor core damage accident, because there may be multiple cores involved, and because there is no containment surrounding the SFP to mitigate the consequences. On the other hand, they are different from a large early release, because the postulated accidents progress very slowly (allowing time for protective actions to be taken to significantly reduce early fatalities), and the absence of short lived isotopes in the release (e.g., iodine isotopes will have decayed away though early health effects are still possible from Cesium isotopes). As a result, the criteria of RG 1.174 cannot be applied directly to the risk of a decommissioning plant.

Even though the event progresses more slowly than an operating reactor large early release event and the isotopic make-up is somewhat different, the risk assessment consequence calculations performed by the staff[4] (assuming multiple cores) show that large inventories of radioisotopes could be released that could have significant late health effects (latent cancers) for the population at some distance from the plant, as well as the potential for a small number of early fatalities. The staff has therefore decided that the end state and consequences of a spent fuel pool fire are sufficiently severe that the RG 1.174 LERF baseline guideline of $1x10^{-5}$ per year (the value of baseline risk above which the staff will only consider very small increases in risk) provides an appropriate frequency guideline for a decommissioning plant SFP risk, and a useful tool to be used in combination with other factors such as accident progression timing, to assess features, systems and operator performance needs of a spent fuel pool in a decommissioning plant. The staff therefore proposes $1x10^{-5}$ per year as the recommended pool performance guideline (PPG) for baseline zirconium fire frequency. In its letter of November 12, 1999 [Ref. 3], the Advisory Committee on Reactor Safeguards (ACRS) recommended that application of the LERF guideline as discussed above be utilized. The staff agrees with this recommendation.

2.1 Principles of Regulatory Guide 1.174

As discussed in RG 1.174, quantitative risk assessment is only one tool utilized in risk-informed decision making. RG 1.174 articulates the following safety principles which should be applied to the decommissioning case:

- "The proposed change meets the current regulations unless it is explicitly related to a requested exemption or rule change, i.e., a "specific exemption" under 10 CFR 50.12 or

---

[2]See section 3 for more complete discussion of fuel pool risk scenarios

[3]RG 1.174 describes LERF as the frequency of unmitigated releases that have the potential for early health effects, in a time frame prior to effective evacuation of close-in population

[4]See Appendix 4 for consequence and health impact assessment

a "petition for rulemaking" under 10 CFR 2.802.

- The proposed change is consistent with the defense-in-depth philosophy.
- The proposed change maintains sufficient safety margins.
- When proposed changes result in an increase in core damage frequency and/or risk, the increases should be small and consistent with the intent of the Commission's Safety Goal Policy Statement
- The impact of the proposed change should be monitored using performance measurement strategies."

While the focus of RG 1.174 was decision-making regarding changes to the licensing basis of an operating plant, the same risk-informed philosophy can be applied to rulemaking for decommissioning plants or to consider potential exemptions to current requirements. The intent and scope of these safety principles are discussed below. However, since the application of this study specifically relates to exemptions to a rule or a rule change for decommissioning plants, a discussion of the first principle regarding current regulations is not necessary nor is it provided. A discussion on how the rest of these principles are satisfied, as demonstrated by the staff's safety assessment, is provided in Section 4.

2.1.1 Defense-in-Depth

Defense-in-depth describes a multi-layered design and operational philosophy whose goal is to prevent the initiation of accidents or to prevent their progression to serious consequences. The defense-in-depth philosophy applies to the operation of the spent fuel pool, whether at an operating plant or in a decommissioning plant. In accordance with the Commission White Paper on Risk-Informed Regulation (March 11, 1999), "Defense-in-depth is an element of the NRC's Safety Philosophy that employs successive compensatory measures to prevent accidents or mitigate damage if a malfunction, accident, or naturally caused event occurs at a nuclear facility. The defense-in-depth philosophy ensures that safety will not be wholly dependent on any single element of the design, construction, maintenance, or operation of a nuclear facility. The net effect of incorporating defense-in-depth into design, construction, maintenance and operation is that the facility or system in question tends to be more tolerant of failures and external challenges."

Therefore, application of defense-in-depth could mean in part that there is more than one source of cooling water or that pump make-up can be provided by both electric as well as direct drive diesel pumps. Additionally, defense-in-depth can mean that even if a serious outcome (such as fuel damage) occurs, there is further protection such as containment to prevent radionuclide releases to the public. However, implementation of defense-in-depth for SFPs is different from that applied to nuclear reactors because of the different nature of the hazards. The robust structural design of a fuel pool, coupled with the simple nature of the pool support systems, goes far toward preventing accidents associated with loss of water inventory or pool heat removal. Additionally, because the essentially quiescent (low temperature, low pressure) initial state of the spent fuel pool and the long time available for taking corrective action associated with most release scenarios provide significant safety margin, a containment

structure is not considered necessary as an additional barrier to provide an adequate level of protection to the public. Likewise, the slow evolution of most SFP accident scenarios allows for reasonable human recovery actions to respond to system failures. Section 4 summarizes the specific design and operational features of the SFP, industry commitments and the additional staff assumptions that ensure that SFP defense-in-depth is maintained. This level of defense is achieved through preventative measures, appropriate mitigating systems, and an appropriate level of emergency planning.

2.1.2 Safety Margins

A safety margin can relate to the difference between the expected value of some physical parameter (e.g., temperature, pressure, stress, reactivity) and the point at which adequate performance is no longer assured. An example of this would be a containment pressure calculation which may show a peak accident pressure of 40 psig is reached for a structure which has a design capability of 60 psig and an actual ultimate capability of 110 psig. In this case there is margin from the accident calculation of 20 psig to the design limit as well as a large margin of 70 psig to the actual expected failure limit.

The safety margins associated with fuel in the spent fuel pool for many physical processes and parameters are much greater than those associated with an operating reactor. The spent fuel pool is in a quiescent state, at or near ambient temperature and pressure. The decay heat levels are much lower than those of the fuel in an operating reactor. This allows much greater time for heating and boil off of the coolant water, and for heat up of the fuel itself, once uncovered. The fuel is covered with approximately 23 feet of water at or near ambient temperature. The pool is designed with ample margin to criticality, using both passive (geometry) and active (poisons) means of reactivity control. Section 4 describes the provisions that ensure the SFP maintains adequate safety margins in a decommissioning plant.

2.1.3 Impact of Proposed Changes

The impact of the proposed change should be small. As discussed above, the staff is applying the pool performance guideline (PPG) of $1x10^{-5}$ per year frequency for a zirconium fire, which was developed from the treatment for LERF in RG 1.174 and a change guideline of $1X10^{-6}$ per year (assuming that the $1X10^{-5}$ per year PPG is already met). This PPG is used to assess the impact and acceptability of SFP risk in decommissioning plants. Sections 3 and 4 discuss the design and operational characteristics of the SFP that are relied upon to produce the low baseline risk results. These are identified in the context of industry commitments as well as additional staff assumptions needed to produce the low SFP risk conclusions.

2.1.4 Implementation and Monitoring Program

RG 1.174 states that an implementation and monitoring plan should be developed to ensure that the engineering evaluation conducted to examine the impact of the proposed changes continues to reflect the actual reliability and availability of structures, systems, and components (SSCs) that have been evaluated. This will ensure that the conclusions that have been drawn will remain valid.

Therefore, with respect to all the above safety principles, implementation and monitoring of important considerations could include such actions as: comparing a check list against the spent fuel pool seismic design and construction; control of heavy load movements; development and implementation of procedures and other provisions to ensure human reliability; monitoring the capability, reliability, and availability of important equipment; and checking the effectiveness of on-site emergency response and plans for communication with off-site authorities. In many areas the implementation and monitoring may already be accomplished by utility programs such as those developed under the maintenance rule [Ref. 4].

3.0 Risk Assessment of Spent Fuel Pools at Decommissioning Plants

As discussed in Section 1 of this paper, the risks from a decommissioning plant are very different from an operating plant. Once fuel is permanently removed from the reactor vessel, the primary public risk in a decommissioning facility is associated with the spent fuel pool. The spent fuel assemblies are retained in the storage pool, and are submerged in water to provide cooling of the fuel's remaining decay heat as well as to provide shielding for the radioactive assemblies. The most severe accidents postulated for SFPs are associated with the loss of water (either through boil-off or draining) from the pool.

Depending on the time since reactor shutdown and on fuel rack configurations, there may be sufficient decay heat to cause the fuel clad to heat up over time, swell and burst in the event of loss of pool water. The breach in the clad would result in the release of radioactive gases present in the gap between the fuel and clad, called "a gap release" (See Appendix 1). If the fuel continues to heat up, the temperature of the zirconium clad will reach the point of rapid oxidation in air. This reaction of zirconium and air is exothermic. The energy released from the reaction combined with the fuel's decay energy can cause the reaction to become self-sustaining and lead to the ignition of the zirconium, or a "zirconium fire." The increase in heat from the oxidation reaction could also raise the temperature in adjacent fuel assemblies and cause the propagation of the oxidation reaction. This zirconium fire would result in a significant release of the fission products contained in the spent fuel, which would be dispersed from the reactor site due to the thermal plume from the zirconium fire. Consequence assessments (Appendix 4) have shown that such a zirconium fire could have significant latent health effects (cancers) as well as the possibility of a small number of early fatalities. Gap releases for fuel from a reactor that has been shut down more than a year release only moderately small quantities of radionuclides, in the absence of a zirconium fire, and would only be of concern for on-site effects.

Based upon the preceding insights, the staff conducted its risk evaluation to estimate the likelihood of credible accident scenarios that could result in loss of pool water and fuel heat up to the point of rapid oxidation. In addition to developing an order-of-magnitude assessment of the level of risk associated with SFPs at decommissioning plants, the objective of this risk assessment included the identification of potential vulnerabilities, and the design and operational characteristics that would minimize these vulnerabilities. Since the decay time at which air cooling alone is sufficient to prevent a zirconium fire is very plant specific, the cut off time (when a zirconium fire can no longer occur) for this risk assessment cannot be pre-determined. Rather, the insights should be considered as generally applicable to a decommissioning plant until the spent fuel decay heat level decreases to a point where rapid

3.0 RISK ASSESSMENT OF SPENT FUEL POOLS AT DECOMMISSIONING PLANTS

As discussed in Section 1 of this paper, the scenarios leading to significant off-site consequences at a decommissioning plant are very different from an operating plant. Once fuel is permanently removed from the reactor vessel, the primary public risk in a decommissioning facility is associated with the spent fuel pool (SFP). The spent fuel assemblies are retained in the storage pool, and are submerged in water to provide cooling of the fuel's remaining decay heat as well as to provide shielding for the radioactive assemblies. The most severe accidents postulated for SFPs are associated with the loss of water (either through boil-off or draining) from the pool.

Depending on the time since reactor shutdown, fuel burnup, and on fuel rack configurations, there may be sufficient decay heat to cause the fuel clad to heat up over time, swell, and burst in the event of loss of pool water. The breach in the clad would result in the release of radioactive gases present in the gap between the fuel and clad, called "a gap release" (See Appendix 1). If the fuel continues to heat up, the temperature of the zirconium clad will reach the point of rapid oxidation in air. This reaction of zirconium and air, or zirconium and steam is exothermic. The energy released from the reaction combined with the fuel's decay energy can cause the reaction to become self-sustaining and lead to the ignition of the zirconium, or a "zirconium fire." The increase in heat from the oxidation reaction could also raise the temperature in adjacent fuel assemblies and cause the propagation of the oxidation reaction. This zirconium fire would result in a significant release of the fission products contained in the spent fuel, which would be dispersed from the reactor site due to the thermal plume from the zirconium fire. Consequence assessments (Appendix 4) have shown that such a zirconium fire could have significant latent health effects (cancers) as well as the possibility of a number of early fatalities. Gap releases for fuel from a reactor that has been shut down more than a year release only moderately small quantities of radionuclides, in the absence of a zirconium fire, and would only be of concern for on-site effects.

Based upon the preceding insights, the staff conducted its risk evaluation to estimate the likelihood of credible accident scenarios that could result in loss of pool water and fuel heat up to the point of rapid oxidation. In addition to developing an order-of-magnitude assessment of the level of risk associated with SFPs at decommissioning plants, the objective of this risk assessment included the identification of potential vulnerabilities and the design and operational characteristics that would minimize these vulnerabilities. If a decay period exists beyond which no zirconium fire could occur if the fuel were uncovered (a deterministic calculation), no significant risk would remain from fuel stored that length of time. The staff attempted to identify on a generic basis a decay period that precludes fuel heat up to zirconium fire conditions. Staff calculations (see Appendix 1) show this time will vary depending on fuel burn up, SFP storage configuration, loading pattern of the assemblies, and assumptions regarding the air flow to the fuel bundles. The staff has been unable to identify a definite period after which a zirconium fire is no longer possible. [1]

---

[1] Even so, from a probabilistic stand point, the longer the period available for recovery, the lower the risk. Thermal-hydraulic heat up analyses indicate that for decay periods of five years or longer, the time from fuel uncovery to the beginning of a zirconium fire is on the order of

In order to support the risk evaluation, the staff conducted a thermal-hydraulic assessment of the SFP for various scenarios such as loss of pool cooling and loss of inventory. These calculations provided information on heat up and boil off rates for the pool, as well as heat up rates for the uncovered fuel assemblies and timing to initiation of a zirconium fire for a number of scenarios and sequences (see Table **YYY**, Section **XXXX**). The results of these calculations provided fundamental information on the timing of accident sequences and provided insights on the time available to recover from events and time available to initiate off-site measures, if necessary. This information was then used in the risk assessment to support the human reliability analysis that assessed the likelihood of recovering level or cooling before a zirconium fire occurs.

For these calculations, the end state assumed for the accident sequences was when the water level reached 3 feet from the top of the spent fuel, rather than calculating the temperature response of the fuel as the level gradually drops. This simplification was used because of the complex heat transfer mechanisms and chemical reactions occurring in the fuel assemblies that are slowly being uncovered. This analytical approach understates the time that is available for possible fuel handler recovery of SFP events prior to initiation of a zirconium fire. However, since the recoverable events such as small loss of inventory or loss of power/pool cooling are very slowly evolving events, many days are generally available for recovery whether the end point of the analysis is uncovery of the top of the fuel or complete fuel uncovery. The extra time available (estimated to be in the tens of hours) as the water level boils down the assemblies, would not impact the very high probabilities of fuel handler recovery from these events given the industry commitments and additional staff assumptions. The staff notes that the assumption that no recovery is possible once the water level reaches 3 feet above the fuel tends to obscure that there are two major types of accidents: those that are slow boil down or drain down events and those that are rapid drain down events. Both types of events would likely not have air cooling, but would most likely be cooled by water or steam. Also obscured is the effect of partial drain down events on event timing, which is addressed in Section **ZZZZZ**. The details of the staff thermal hydraulic assessment are provided in Appendix 1.

3.1 Basis and Findings of SFP Risk Assessment

In order to follow the framework for the regulatory decision-making process described in Section 2, a comprehensive assessment of SFP risk was necessary. To gather information on SFP design and operational characteristics for the preliminary risk assessment done for the June 1999 draft report, the staff conducted site visits to four decommissioning plants to ascertain what would be an appropriate model for decommissioning spent fuel pools. The site visits confirmed that the as-operated spent fuel pool cooling systems were different from those in operation when the plants were in power operation. The operating plant pool cooling and make-up systems generally have been removed and replaced with portable, skid-mounted pumps and heat exchangers. While in some cases there are redundant pumps, in most cases physical separation, barrier protection, and emergency on-site power sources are no longer maintained. Modeling information for the PRA analysis was determined from system walk-

---

24 hours or more for BWRs with a burnup of 60 gigawatt days per metric ton or less and on the order of 17 or more hours for PWRs with a burnup of 60 GWd/MT or less.

downs as well as limited discussions with the decommissioning plant staff. Since limited information was collected for the preliminary assessment on procedural and recovery activities as well as what the minimum configuration a decommissioning plant might have, a number of assumptions and bounding conditions were assumed for the June 1999 preliminary study. These preliminary results have been refined in this assessment after obtaining more detailed information from industry on SFP design and operating characteristics for a decommissioning plant, as well as a number of industry commitments that contribute to achieving low risk findings from SFP incidents. These revised results also reflect improvements in the PRA model since publication of the June 1999 and February 2000 reports.

The staff identified the following nine initiating event categories to investigate as part of the quantitative assessment on SFP risk:

1. Loss of Off-site Power from plant centered and grid related events
2. Loss of Off-site Power from events initiated by severe weather
3. Internal Fire
4. Loss of Pool Cooling
5. Loss-of-Coolant Inventory
6. Seismic Event
7. Cask Drop
8. Aircraft Impact
9. Tornado Missile

In addition, a qualitative risk perspective was developed for inadvertent criticality in the SFP (See Section 3.5.4). The risk model, as developed by the staff and supplemented through a quality review from Idaho National Engineering & Environmental Laboratory (INEEL), is provided in Appendix 2. Appendix 2 also includes the modeling details for the heavy load drop, aircraft impacts, seismic, and tornado missile assessments. Input and comments from stakeholders were also utilized in updating the June 1999 and February 2000 models to the present model.

3.2 Characteristics of SFP Design and Operations for a Decommissioning Plant

Based on information gathered from the site visits and interactions with NEI and other stakeholders, the staff modeled the spent fuel pool cooling system (SFPC) (see Figure 3.1) as being located in the SFP area and consisting of motor-driven pumps, a heat exchanger, an ultimate heat sink, a make-up tank, a filtration system, and isolation valves. Suction is taken from the SFP via one of the two pumps and is passed through the heat exchanger and returned back to the pool. One of the two pumps on the secondary side of the heat exchanger rejects the heat to the ultimate heat sink. A small amount of water is diverted to the filtration process and is returned back into the discharge line. A manually operated make-up system (with a limited volumetric flow rate) supplements the small losses due to evaporation. In the case of prolonged loss of SFPC system or loss of inventory events, the inventory in the pool can be made up using the firewater system, if needed. There are two firewater pumps, one motor-driven (electric) and one diesel-driven, which provide firewater in the SFP area. A firewater hose station is provided in the SFP area. The firewater pumps are located in a separate structure.

Figure 3.1 Assumed Spent Fuel Pool Cooling System

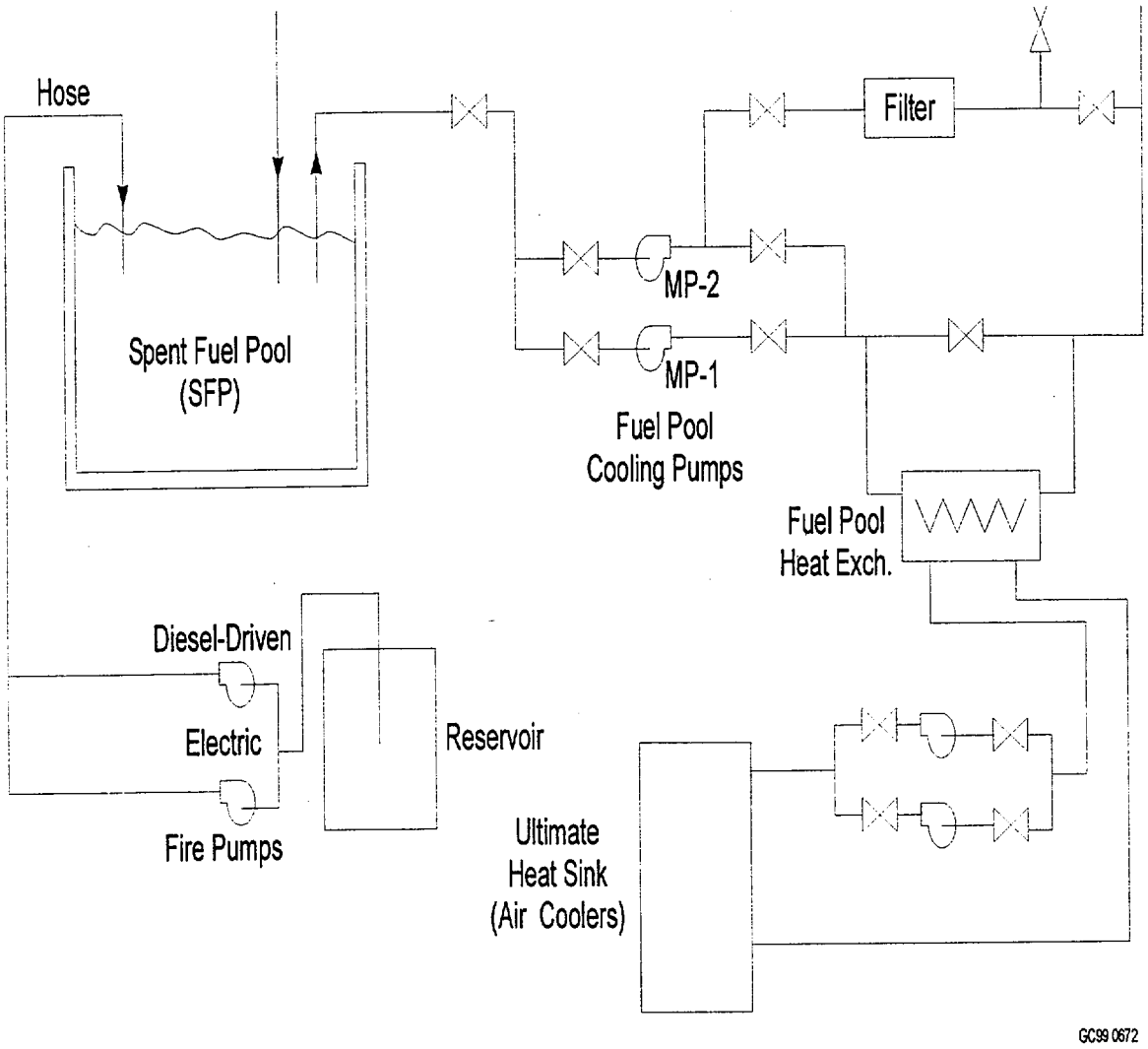

Based upon information obtained during the site visits and discussions with the decommissioning plant personnel during those visits, the staff also made the following assumptions that are believed to be representative of a typical decommissioning facility:

- The make-up capacity (with respect to volumetric flow) is assumed to be as follows:

Make-up pump:	20 - 30 gpm
Firewater pump:	100 - 200 gpm
Fire engine:	100 - 250 gpm [depending on hose size: 1-½" (100 gpm) or 2-½" (250 gpm)]

The staff also assumed that for the larger loss-of-coolant inventory accidents, water addition through the make-up pumps does not successfully mitigate the loss of inventory event unless the location of inventory loss is isolated.

- The SFP fuel handlers perform walk-downs of the SFP area once per shift (8- to 12-hour shifts). A different crew member is assumed for the next shift. The staff also assumed that the SFP water is clear and pool level is observable via a measuring stick in the pool that can alert fuel handlers to level changes.

- Plants do not have drain paths in their spent fuel pools that could lower the pool level (by draining, suction, or pumping) more that 15 feet below the normal pool operating level.

Based upon the results of the June 1999 preliminary risk analysis and its associated sensitivity cases, it became clear that many of the risk sequences were quite sensitive to the performance of the SFP operating staff in identifying and responding to off-normal conditions. This is due to the fact that the remaining systems of the SFP are relatively simple, with manual rather than automatic initiation of backups or realignments. Therefore, if scenarios such as loss of cooling or inventory loss to the pool occur, fuel handler response to diagnose the failures and bring on-site and off-site resources to bear are fundamental for ensuring that the fuel assemblies remain cooled and a zirconium fire is prevented.

As part of its technical evaluations, the staff assembled a small panel of experts[2] who identified the attributes necessary to achieving very high levels of human reliability for responding to potential accident scenarios in a decommissioning plant SFP. (A discussion of these attributes and the HRA methodology used is provided in Section 3.2 of Appendix 2a.)

Upon consideration of the sensitivities identified in the staff's preliminary study and to reflect actual operating practices at many decommissioning facilities, the nuclear industry, through NEI, made important commitments (reproduced in Appendix 6), which were reflected in the staff's updated risk assessment. The revisions to the risk assessment generally reflect changes of assumptions in the areas shown below. The applicability of the specific industry decommissioning commitments (IDCs) with respect to the risk analysis results are discussed later in this section. How the commitments relate to specific risk conclusions and safety principles is also discussed in Section 4. Any future rulemaking or other regulatory activity would determine how these commitments are implemented.

Where additional operational and design considerations (beyond industry commitments) had to be assumed to ensure that the low risk estimates presented in this study are achieved, the staff identified additional staff decommissioning assumptions (SDAs), which are detailed in later sections of this report. As with the industry commitments, staff assumptions on SFP design and operational features, which were necessary to achieve the low SFP risk findings of this report, will be identified and implemented as appropriate in future regulatory activities.

---

[2]Panel composed of Gareth Parry, U.S. NRC; Harold Blackman, INEEL; and Dennis Bley, Buttonwood Consulting.

Industry Decommissioning Commitments

IDC #1 Cask drop analyses will be performed or single failure proof cranes will be in use for handling of heavy loads (i.e., phase II of NUREG 0612 will be implemented).

IDC #2 Procedures and training of personnel will be in place to ensure that on-site and off-site resources can be brought to bear during an event.

IDC #3 Procedures will be in place to establish communication between on-site and off-site organizations during severe weather and seismic events.

IDC #4 An off-site resource plan will be developed which will include access to portable pumps and emergency power to supplement on-site resources. The plan would principally identify organizations or suppliers where off-site resources could be obtained in a timely manner.

IDC #5 Spent fuel pool instrumentation will include readouts and alarms in the control room (or where personnel are stationed) for spent fuel pool temperature, water level, and area radiation levels.

IDC #6 Spent fuel pool seals that could cause leakage leading to fuel uncovery in the event of seal failure shall be self limiting to leakage or otherwise engineered so that drainage cannot occur.

IDC #7 Procedures or administrative controls to reduce the likelihood of rapid drain down events will include (1) prohibitions on the use of pumps that lack adequate siphon protection or (2) controls for pump suction and discharge points. The functionality of anti-siphon devices will be periodically verified.

IDC #8 An on-site restoration plan will be in place to provide repair of the spent fuel pool cooling systems or to provide access for make-up water to the spent fuel pool. The plan will provide for remote alignment of the make-up source to the spent fuel pool without requiring entry to the refuel floor.

IDC #9 Procedures will be in place to control spent fuel pool operations that have the potential to rapidly decrease spent fuel pool inventory. These administrative controls may require additional operations or management review, management physical presence for designated operations or administrative limitations such as restrictions on heavy load movements.

IDC #10 Routine testing of the alternative fuel pool make-up system components will be performed and administrative controls for equipment out of service will be implemented to provide added assurance that the components would be available, if needed.

3.3 Estimated Frequencies of Spent Fuel Uncovery and Assumptions That Influence the Results

Based upon the above design and operational features, industry commitments, technical comments from stakeholders, and the input from the INEEL technical review, the staff's SFP risk model was updated. The updates have improved the estimated frequency calculations, but have not changed the need for the industry commitments or staff decommissioning assumptions. Absolute values of some sequences have decreased, but the overall insights from the risk assessment remain.

3.3.1 Internal and External Initiator Frequency of Spent Fuel Pool Uncovery

The results for the initiators that were assessed quantitatively are shown in Table 3.1. This table summarizes the fuel uncovery frequency for each accident initiator. The frequencies are point estimates, based on the use of point estimates for the input parameters. For the most part, these input parameter values would be used as the mean values of the probability distributions that would be used in a calculation to propagate parameter uncertainty. Because the systems are very simple with little support needs, the point estimates therefore reasonably correlate to the mean values that would be obtained from a full propagation of parameter uncertainty. Due to the large margin between the loss of cooling and inventory sequence frequencies and the pool performance guideline, this propagation was judged to be unnecessary (See Section 5 of Appendix 2a for further discussion of uncertainties).

The results in Table 3.1 show that the estimated generic frequency for a zirconium fire of fuel that has a decay time of 1 year ranges from less than $2x10^{-6}$ per year to less than $5X10^{-6}$ per year (depending on the seismic hazard estimates used), with the dominant contribution being from a severe seismic event. Plant-specific frequency estimates in some cases could be as much as an order of magnitude lower because of a much lower seismic hazard at the plant site. A more detailed characterization of the seismic risk is discussed in Section 3.5.1 and Appendix 2b. In Section 3.4.7 the staff discusses the expected fuel uncovery frequencies for fuel that has been decayed for 2 years, 5 years, and 10 years.

In conjunction with the frequency of the uncovery of the spent fuel, it is important to know the time it takes to heat up the fuel once it has been uncovered fully or partially. Table VVV in Section JJJ lists the times to heat up the fuel from 30 °C to 800 °C (the temperature at which zirconium oxidation is postulated to become runaway oxidation and at which fission products are expected to be expelled from the fuel and cladding) with and without air circulation.

The staff realizes that the volumetric rate of air that a fuel bundle receives during a loss of cooling event significantly influences the heat-up of the bundle. Based on engineering judgment, we have partitioned the frequency of each sequence into parts that will be treated as if the spent fuel pool area turns over two building volumes per hour (high air flow) and as if the bundle receives little or no air flow (low air flow). For the low air flow case in order to simplify and bound a very complex calculation that is highly dependent on plant-specific fuel and bundle design, the staff has performed the heat up calculations assuming adiabatic heat transfer (See Appendix 1). Table 3.2 provides this partition.

Table 3.1 Spent Fuel Pool Cooling Risk Analysis Frequency of Fuel Uncovery (per year)

INITIATING EVENT	Frequency of Fuel Uncovery (EPRI hazard) at 1 year	Frequency of Fuel Uncovery (LLNL hazard) at 1 year
Seismic Event [3]	less than $6x10^{-07}$	less than $4.5X10^{-06}$
Cask Drop [4]	$2.0X10^{-07}$	same
Loss of Off-site Power - Initiated by severe weather	$1.1X10^{-07}$	same
Loss of Off-site Power - Plant centered and grid related events	$2.9X10^{-08}$	same
Internal Fire	$2.3X10^{-08}$	same
Loss of Pool Cooling	$1.4X10^{-08}$	same
Loss-of-Coolant Inventory	$3.0X10^{-09}$	same
Aircraft Impact	$2.9X10^{-09}$	same
Tornado Missile	$<1.0X10^{-09}$	same
Total	$<1x10^{-06}$	$<4.9X10^{-06}$

[3]This contribution applies to SFPs that satisfy the seismic checklist and includes seismically induced catastrophic failure of the pool (which dominates the results) and a small contribution from seismically induced failure of pool support systems.

Both the EPRI and Lawrence Livermore National Laboratory (LLNL) hazard estimates for reactor sites are considered reasonable by the NRC. The frequency of $5x10^{-6}$ per year (based on the use of LLNL hazard estimates) for seismic events bounds all but seven sites (Diablo Canyon, San Onofre, WNP2, Robinson, Pilgrim, Maine Yankee, and Vogtle). About half of the potential decommissioning sites have return frequencies less than $1x10^{-6}$ per year. Excluding the seven sites, the rest are clustered in the range of $1x10^{-6}$ per year to $4.5x10^{-6}$ per year. See Appendix 2b for details of the seismic analysis. If EPRI hazard estimates were used, all sites east of the Rocky Mountains have return frequencies less than $1.9x10^{-6}$ per year with only one site identified as being greater than $1x10^{-6}$ per year. For the EPRI curves, most frequencies are clustered around $2x10^{-7}$ per year.

[4]For a single failure proof system without a load drop analysis. The staff assumed that facilities that chose the option in NUREG-0612 to have a non-single failure proof system performed and implemented their load drop analysis including taking mitigative actions to the extent that there would be high confidence that the risk of catastrophic failure was less than or equivalent to that of a single failure proof system.

Table 3.2 Spent Fuel Pool Cooling Risk Analysis Frequency Partition (per year) at One Year Decay Time Assuming LLNL Hazard Curves

SEQUENCES	TOTAL FREQ (PER YEAR)	% HIGH AIR FLOW	% LOW AIR FLOW (ADIABATIC)	FREQ W/ HIGH AIR FLOW	FREQ W/ LOW AIR FLOW
Seismic	$<4.5\times10^{-6}$	30%	70%	$<1.4\times10^{-6}$	$<3.1\times10^{-6}$
Heavy Load Drop	2.0×10^{-7}	50%	50%	1.0×10^{-7}	1.0×10^{-7}
Loss of Off-site Power, Severe Weather	1.1×10^{-7}	90%	10%	1.0×10^{-7}	1.1×10^{-8}
Loss of Off-site Power, Plant/Grid Centered	2.9×10^{-8}	90%	10%	2.6×10^{-8}	2.9×10^{-9}
Internal Fire	2.3×10^{-8}	90%	10%	2.1×10^{-8}	2.3×10^{-9}
Loss of Pool Cooling	1.4×10^{-8}	90%	10%	1.3×10^{-8}	1.4×10^{-9}
Loss of Coolant Inventory	3.0×10^{-9}	90%	10%	2.7×10^{-9}	3.0×10^{-10}
Aircraft Impact	2.9×10^{-9}	50%	50%	1.5×10^{-9}	1.5×10^{-9}
Tornado Missile	$<1.0\times10^{-9}$	50%	50%	$<5\times10^{-10}$	$<5\times10^{-10}$
TOTALS	$<4.9\times10^{-6}$	-	-	$<1.7\times10^{-6}$	$<3.2\times10^{-6}$

In Table 3.2 for seismic sequences, we have assumed that 30 percent of the time the building will turn over two building volumes of air per hour (high air flow case) and 70 percent of the time the individual bundle of concern will receive little or no air turnover. These percentages are based on discussions with staff structural engineers who believe that at accelerations in excess of 1.2 g spectral acceleration (which is greater than three times the SSE for many reactor sites east of the Rocky Mountains) there is a high likelihood that there will be building damage that leads to blockage of air flow. For heavy load drop sequences, the staff assumed a 50 percent partition to the high air flow case. This is based on consideration for both damage to fuel bundles due to a heavy load drop that renders bundles uncoolable and to the alternative possibility that the drop damaged the building structure in such a manner that some spent fuel

bundles are blocked. For loss of off-site power events caused by severe weather, the staff assumed a 90 percent partition to the high airflow case. This is based on a staff assumption that openings in the building containing the spent fuel pool (e.g., doors and roof hatches) are sized such that, if forced circulation is lost, natural circulation cooling will provide at least two building volume turnovers per hour to the spent fuel pool. Such an assumption may need to be confirmed on a plant-specific basis.

The staff has partitioned the rest of the sequences in Table 3.2, but the partitions do not really matter in regulatory decision-making since their percentage of contribution to the overall zirconium fire frequency is so low and their absolute value is so low. Regarding their absolute value, the staff notes that these estimated frequencies are so low that most individuals have little understanding of what the frequencies really mean. At such low frequencies, scenarios not modeled (e.g., meteor strikes and volcanic eruptions) probably would have a higher contribution to the overall risk. We merely note that our analysis shows on a relative and absolute basis their contribution is very low.

In addition in general, consideration of whether or not a spent fuel bundle would receive high air flow or low air flow following fuel uncovery does not change our insights into the risk associated with operation of spent fuel pools. The partition results are driven by how one partitions seismic events.

3.3.2 Important Assumptions

As discussed in more detail in Appendix 2, the results of the risk analysis depend on assumptions on the design and operational characteristics of the SFP facility. The inputs that have the potential to significantly influence the results are summarized below.

- The modeled system configuration is described in Section 3.2. The assumed availability of a diesel-driven fire pump is an important element in the conclusion that fuel uncovery frequency is low for the loss of off-site power initiating events and the internal fire initiating event. The assumption of the availability of a redundant fuel pool cooling pump is not as important since the modeling of the recovery of the failed system includes repair of the failed pump, not just the startup of the redundant pump. Finally, multiple sources of make-up water are assumed for the fire pumps. This lessens the concern for possible dependencies between initiating events (e.g., severe weather events, high wind events, or seismic events) and the availability of make-up water supply (e.g., fragility of the fire water supply tank).

- Plants do not have drain paths in their spent fuel pools that could lower the pool level (by draining, suction, or pumping) more that 15 feet below the normal pool operating level.

- Openings in the building containing the spent fuel pool (e.g., doors and roof hatches) are sized such that, if forced circulation is lost, natural circulation cooling will provide at least two building volume turnovers per hour to the spent fuel pool and procedures exist to implement natural circulation.

- Credit is taken for industry/NEI commitments as described in Section 3.2. Without this credit, the risk is estimated to be more than an order of magnitude higher. Specifically,

  - IDC #1 is credited for lowering the risk from cask drop accidents.

  - IDCs # 2, 3, 4, and 8 are credited for the high probability of recovery of loss of cooling (including events initiated by loss of power or fire) and loss of inventory scenarios. In order to take full credit for these commitments, additional assumptions concerning how these commitments will be implemented have been made. These include: procedures and training are explicit in giving guidance on the capability of the fuel pool make-up system, and when it becomes essential to supplement with alternate higher volume sources; procedures and training are sufficiently clear in giving guidance on early preparation for using the alternate make-up sources; and walk-downs are performed on a regular (once per shift) basis and the fuel handlers document the observations in a log. The latter is important to compensate for potential failures to the instrumentation monitoring the status of the pool.

  - IDC # 5 is credited for the high probability of early identification and diagnosis (from the control room) of the loss of cooling or loss of inventory.

  - IDCs # 6, 7, and 9 are credited with lowering the initiating event frequency for the loss of inventory event from its historical levels. In addition, these commitments were used to justify the assumption that a large non-catastrophic leak rate is limited to approximately 60 gpm, and the assumption that the leak is self limiting after a drop in level of 15 feet. These assumptions may be non-conservative on a plant-specific basis depending on SFP configuration and specific commitments on configuration control.

  - IDC # 10 is credited for the equipment availabilities and reliabilities used in the analysis. In addition, if there are specific administrative procedures to control the out of service duration for the diesel fire pump, the relatively high unavailability for this pump (of 0.18) could be lowered.

- Initiating event frequencies for the loss of cooling, loss of inventory, and loss of off-site power are based on generic data. In addition, the probability of power recovery is also based on generic information. Site-specific differences would proportionately affect the risk from these initiating events.

The various initiating event categories are discussed below. The staff's qualitative risk insights on the potential for SFP criticality are discussed in Section 3.5.4.

3.4 Internal Event Scenarios Leading to Fuel Uncovery

The following summary is a description of the accident associated with each internal event initiator. Details of the assessment are provided in Appendix 2.

3.4.1 Loss of Cooling

The loss of cooling initiating event may be caused by the loss of coolant system flow from the failure of pumps or valves, by piping failures, by an ineffective heat sink (e.g., loss of heat exchangers), or by a local loss of power (e.g., electrical connections). While it may not be directly applicable due to design differences in a decommissioning plant, operational data from NUREG-1275, Volume 12 [Ref. 3] shows that the frequency of loss of spent fuel pool cooling events in which a temperature increase of more than 20 °F occurred can be estimated to be on the order of two to three events per 1000 reactor years. The data also showed that for the majority of events the duration of the loss of cooling was less than 1 hour. Only three events exceeded 24 hours, with the maximum duration being 32 hours. There were four events where the temperature increase exceeded 20 °F, with the maximum increase being 50 °F.

The calculated fuel uncovery frequency for this initiating event is 1.4×10^{-8} per year. Indications of a loss of pool cooling that are available to fuel handlers include control room alarms and indicators, local temperature measurements, and eventually increasing area temperature and humidity and low pool water level from boil-off. To have fuel uncovery, the plant fuel handlers would have to fail to recover the cooling system (either fails to notice the loss of cooling indications, or fails to repair or restore the cooling system). In addition, the fuel handlers would have to fail to provide make-up cooling using other on-site sources (e.g., fire pumps) or off-site sources (e.g., use of a fire brigade). For these recovery actions, there is a lot of time available. In the case of 1-year-old fuel (i.e., fuel that was in the reactor when it was shutdown 1 year previously), approximately 195 hours is available for a PWR and 253 hours for a BWR until the water level is within 3 feet of the spent fuel. These heat up and boil-off times are about double those reported by the staff previously due to an error in the staff's heat load assumptions. For 2-year-old, 5-year-old, and 10-year-old fuel, much longer periods are available (See Table 3.3). Because the uncovery frequency is already very low (on the order of 1 in a 100,000,000 per year) in absolute and relative terms among initiators, and because the quantification of human reliability analysis values for such extended periods of recovery is beyond the state-of-the-art, the staff did not attempt to recalculate the expected uncovery frequency.

A careful and thorough adherence to IDCs 2, 5, 8, and 10 is crucial to establishing and maintaining the low frequency. In addition, however, the assumption that walk-downs are performed on a regular (once per shift) basis is important to compensate for potential failures of the instrumentation monitoring the status of the pool. The analysis has also assumed that the procedures and/or training are explicit in giving guidance on the capability of the fuel pool make-up system, and when it becomes essential to supplement with alternative higher volume sources. The analysis also assumed that the procedures and training are sufficiently clear in giving guidance on early preparation for using the alternative make-up sources.

It should be noted that there were two recent events involving a loss of cooling at SFPs. The first, occurring in December 1998 at Browns Ferry Unit 3, involved a temperature increase of approximately 25 °F over a 2-day period. This incident, caused by the short cycling of cooling water through a stuck-open check valve, was not detected by the control room indicators due to a design flaw in the indicators. In the second event, occurring in January 2000, the SFP temperature increased by approximately 40 °F to 50 °F at the Duane Arnold Unit 1 plant. The incident, which was undetected for approximately two and a half days, was caused by operator

failure to restore the SFP cooling system heat sink following maintenance activities. At this plant, there was no alarm for high fuel pool temperature, although temperature indicators are available in the control room. Since the conditional probability of fuel uncovery is low given a loss of cooling initiating event, the addition of these two recent events to the database will not affect the conclusion that the risk from these events is low. However, the recent events further illustrate the importance of industry commitments, particularly IDC # 5 that requires temperature instrumentation and alarms in the control room. In addition, the staff assumptions that walk-downs are performed on a regular (once per shift) basis, with the fuel handler documenting the observations in a log, and the assumption that control room instrumentation that monitors spent fuel pool temperature and water level will directly measure the parameters involved are important elements to keep the risk low, since the walk-downs compensate for potential failures of the control room instrumentation and direct measurement would preclude failures such as occurred at Browns Ferry.

Even with the above referenced industry commitments, the additional need for walk-downs to be performed at least once per shift and the specific need for direct indication of level and temperature had to be assumed in order to arrive at the low accident frequency calculated for this scenario. These additional assumptions are identified by the staff as staff decommissioning assumptions number 1 (SDA #1) and SDA #2. SDA #1 includes the assumed presence of explicit procedures and fuel handler training, which provide guidance on the capability and availability of inventory make-up sources and the time available to initiate these sources.

SDA #1 Walk-downs of SFP systems will be performed at least once per shift by the fuel handlers. Procedures will be developed for and employed by the fuel handlers to provide guidance on the capability and availability of on-site and off-site inventory make-up sources and time available to initiate these sources for various loss of cooling or inventory events.

SDA #2 Control room instrumentation that monitors spent fuel pool temperature and water level will directly measure the parameters involved.

3.4.2 Loss of Coolant Inventory

This initiator includes loss of coolant inventory from events such as those resulting from configuration control errors, siphoning, piping failures, and gate and seal failures. Operational data provided in NUREG-1275, Volume 12 show that the frequency of loss of inventory events in which a level decrease of more than 1 foot occurred can be estimated to be less than one event per 100 reactor years. Most of these events are as a result of fuel handler error and are recoverable. Many of the events are not applicable in a decommissioning facility. NUREG-1275 shows that, except for one event that lasted for 72 hours, there were no events that lasted more than 24 hours. Eight events resulted in a level decrease of between 1 and 5 feet, and another two events resulted in an inventory loss of between 5 and 10 feet.

Using the information from NUREG-1275, it can be estimated that 6 percent of the loss of inventory events will be large enough and/or occur for a duration that is long enough so that isolation of the loss is required if the only system available for make-up is the spent fuel pool

make-up system. For the other 94 percent of the cases, operation of the make-up pump is sufficient to prevent fuel uncovery.

The calculated fuel uncovery frequency for loss of inventory events is 3.0×10^{-9} per year. Fuel uncovery occurs if plant fuel handlers fail to initiate inventory make-up either by use of on-site sources such as the fire pumps or off-site sources such as the local fire department. In the case of a large leak, isolation of the leak would also be necessary if the make-up pumps were used. The time available for fuel handler action is considerable, and even in the case of a large leak, it is estimated that 40 hours will be available. Fuel handlers will be alerted to a loss of inventory condition by control room alarms and indicators, visibly decreasing water level in the pool, accumulation of water in unexpected locations, and local alarms (radiation alarms, building sump high level alarms, etc.).

As in the case for the loss of pool cooling, the frequency of fuel uncovery is calculated to be very low. Again a careful and thorough adherence to IDCs 2, 5, 8, and 10 is crucial to establishing the low frequency. In addition, the assumptions that walk-downs (see SDA #1 above) are performed on a regular (once per shift) basis and that instrumentation directly measures temperature and level are important to compensate for potential failures of the instrumentation monitoring the status of the pool, the assumption that the procedures and/or training are explicit in giving guidance on the capability of the fuel pool make-up system lowers the expected probability of fuel handler human errors, and the assumption that fuel handlers will supplement spent fuel pool makeup at appropriate times from alternative higher volume sources lowers the estimated frequency of failure of the fuel handler to mitigate the loss-of-coolant inventory. Also, IDCs 6, 7, and 9 have been credited with lowering the initiating event frequency.

3.4.3 Loss of Off-Site Power from Plant-Centered and Grid Related Events

A loss of off-site power from plant-centered events typically involves hardware failures, design deficiencies, human errors (in maintenance and switching), localized weather-induced faults (e.g., lightning), or combinations of these. Grid-related events are those in which problems in the off-site power grid cause the loss of off-site power. With off-site power lost (and therefore on-site power is lost too, since the staff assumes there is no diesel generator available to pick up the necessary electrical loads), there is no effective heat removal process for the spent fuel pool. If power were not restored in time, the pool would heat up and boil off inventory until the fuel is uncovered. The diesel-driven fire pump would be available to provide inventory make-up. If the diesel-driven pump fails, and if off-site power were not recovered in a timely manner, recovery using off-site fire engines is a possibility. With 1-year-old fuel (i.e., the newest fuel in the fuel pool was shutdown in the reactor 1 year ago), approximately 195 hours for a PWR or 253 hours for a BWR are available for this recovery action. These heat up and boil-off times are about double those reported by the staff previously due to an error in the staff's heat load assumptions. For 2-year-old, 5 year-old, and 10-year-old fuel, much longer periods are available (See Table 3.3).

Even given recovery of off-site power, the fuel handlers have to restart the fuel pool cooling pumps. Failure to do this or failure of the equipment to restart will necessitate other fuel handler recovery actions. Again, considerable time is available.

The calculated fuel uncovery frequency for this sequence of events is 2.9×10^{-8} per year. This frequency is very low, and similar to the cases for the loss of pool cooling and loss of inventory, is based on adherence to IDCs 2, 5, 8, and 10. In addition, the performance of regular plant walk-downs, the availability of clear and explicit procedures and fuel handler training, and the direct measurement of level and temperature in the SFP are assumed as documented in SDA #1 and in SDA #2 above.

3.4.4 Loss of Off-Site Power from Severe Weather Events

This event represents the loss of SFP cooling due to a loss of off-site power from severe weather-related events. This includes contributions from hurricanes, snow and wind, ice, wind and salt, wind, and one tornado event. Because of their potential for severe localized damage, tornadoes and their direct impact to the site were analyzed separately in Appendix 2e and summarized in Section 3.5.3 of this report.

Until off-site power is recovered, the electrical pumps would be unavailable and the diesel-driven fire pump would be available to only provide make-up. When compared to the loss of off-site power events from grid-related and plant-centered causes, recovery of off-site power in this case is assumed to be less probable. In addition, given the conditions, it would be more difficult for off-site help to assist the fuel handlers at the site than for an ordinary loss of off-site power event.

The calculated fuel uncovery frequency for this event is 1.1×10^{-7} per year. As in the previous cases, this estimate was based on IDCs 2, 5, 8, 10 and on assumptions documented in SDA #1 and SDA #2. In addition, IDC 3, related to having procedures in place for communication between on-site and off-site organizations during severe weather, is also important in the analysis for increasing the likelihood of off-site resources being able to respond effectively.

3.4.5 Internal Fire

This event tree models the loss of SFP cooling caused by internal fires. The staff assumed that there is no automatic fire suppression system for the SFP cooling area. The fuel handler may initially attempt to manually suppress the fire given that they respond to the control room or local area alarms. If the fuel handler fails to respond to the alarm, or is unsuccessful in extinguishing the fire within the first 20 minutes, the staff assumed that the SFP cooling system will be significantly damaged and cannot be repaired. Once the inventory level drops below the SFP cooling system suction level, the fuel handlers have about 85 hours to provide some sort of alternative make-up, either using the site firewater system or by calling upon off-site resources. It was assumed that fire damages the plant power supply system such that the power to the electrical firewater pump is lost and would not be available.

The calculated fuel uncovery frequency for this event is 2.3×10^{-8} per year. As in the previous cases, this estimate was based on IDCs 2, 5, 8, and 10 and on the staff assumptions in SDA #1 and SDA #2. In addition, IDC 3, related to having procedures in place for communication between on-site and off-site organizations during severe weather, is also important in the analysis for increasing the likelihood of off-site resources being able to respond effectively to this fire event by increasing the likelihood for recovery using off-site resources.

3.4.6 Heavy Load Drops

The staff investigated the frequency of dropping a heavy load in or near the spent fuel pool, and investigated potential damage to the pool from such a drop. The previous assessment done for resolution of Generic Issue 82 (in NUREG/CR-4982 (Ref. 4)) only considered the possibility of a heavy load drop falling on the pool wall. The assessment conducted for this study identified other failure modes, such as the pool floor, as also being credible for some sites. Details of the heavy load evaluation can be found in Appendix 2c. The analysis exclusively considered drops that were severe enough to catastrophically damage the spent fuel pool such that pool inventory would be lost rapidly and it would be impossible to refill the pool using on-site or off-site resources. In essence there is no possibility for mitigation in such circumstances, only prevention. In particular the staff has not attempted to partition the initiator into events where there is full rapid drain down and events where there is rapid, but partial drain down. The staff assumes a catastrophic heavy load drop (that caused a large leakage path in the pool) would lead directly to a zirconium fire. The time from the load drop until a fire would vary depending on fuel age, burn up, and configuration. The dose rates in the pool area prior to any zirconium fire would be on the order of tens of thousands of rem per hour, making any potential recovery actions such as temporary large inventory addition systems very difficult.

Based on discussions with staff structural engineers, it was assumed that only spent fuel casks had sufficient weight to catastrophically damage the pool if dropped. The staff assumed there is a very low likelihood that other heavy loads would be moved over the spent fuel pool, and in addition, if there were a drop of one of these lighter loads over the spent fuel pool, there would be a very low likelihood that it would cause catastrophic damage to the pool.

For a non-single failure proof load handling system, the likelihood of a heavy load drop (i.e., the drop frequency) was estimated, based on NUREG-0612 information, to have a mean value of 3.4×10^{-4} per year. The number of heavy load lifts was based on the NEI estimate of 100 spent fuel shipping cask lifts per year, which probably is an overestimate. For plants with a single failure proof load handling system or a plant conforming to the NUREG-0612 guidelines, the plant is estimated to have a drop frequency mean value of 9.6×10^{-6} per year, again for 100 heavy load lifts per year but using data from U.S. Navy crane experience. Once the load is dropped, the analysis must then consider whether the drop would do significant damage to the spent fuel pool.

When estimating the failure frequency of the pool floor and pool wall, the staff assumed that heavy loads physically travel near or over the pool approximately 13 percent of the total path lift length (the path lift length is the distance from the lift of the load to the placement of the load on the pool floor). The staff also assumed that the critical path length (the fraction of total path the load is lifted high enough above the pool that a drop could cause damage to the structure) is approximately 16 percent of the time the load is near or over the pool. The staff estimated the catastrophic failure rate from heavy load drops to have a mean value of 2.1×10^{-5} per year for a non-single failure proof system where reliance is placed on electrical interlocks, fuel handling system reliability, and safe load path procedures. The staff estimated the catastrophic failure rate from heavy load drops to have a mean value of 2×10^{-7} per year for a single failure proof system. The staff assumed that licensees that chose the non-single failure proof system option in NUREG-0612 performed appropriate analyses and took mitigative actions to reduce the

expected frequency of catastrophic damage to the same range as that of facilities with a single failure proof system.

NEI has made a commitment (IDC #1) for the nuclear industry that future decommissioning plants will comply with Phases I and II to the NUREG-0612 guidelines. Consistent with this industry commitment, the additional assurance of a well performed and implemented load drop analysis, including mitigative actions, was assumed in order to arrive at a low accident frequency for non-single failure proof systems that is comparable to single failure proof systems.

SDA #3 Load Drop consequence analyses will be performed for facilities with non-single failure proof systems. The analyses and any mitigative actions necessary to preclude catastrophic damage to the spent fuel pool that would lead to a rapid pool draining should be performed with sufficient rigor to demonstrate that there is high confidence in the facility's ability to withstand a heavy load drop.

While the focus of this report is the risk associated with wet storage of spent fuel during decommissioning, the staff was alert to any implications on the storage of spent fuel during power operation. With regard to power operation, the resolution of Generic Issue (GI) 82, "Beyond Design Basis Accidents in Spent Fuel Pools," and other studies of operating reactor spent fuel pools concluded that existing requirements for operating reactor spent fuel pools are sufficient. During this study, the staff evaluated one additional issue concerning the drop of a cask on the spent fuel pool floor. As noted above, due to the industry's commitment to Phase II of NUREG-0612, "Control of Heavy Loads at Nuclear Power Plants, Resolution of Generic Technical Activity A-36," this is not a concern for decommissioning reactors.

Operating reactors are not required to implement Phase II of NUREG-0612. The risk for spent fuel pools at operating plants is limited by the lower expected frequency of heavy load lifts as compared to decommissioning plants. Nonetheless, this issue will be further examined as part of the Office of Nuclear Regulatory Research's prioritization of Generic Safety Issue 186, "Potential Risk and Consequences of Heavy Load Drops in Nuclear Power Plants," which was accepted in May 1999.

3.4.7 Spent Fuel Pool Uncovery Frequency at 2, 5, and 10 Years After Shutdown

The staff has considered how the increased recovery time available to fuel handlers at 2, 5, and 10 years after shutdown (See Table XYZ) would change the insights or bottom line numerical results from the risk assessment . The increased recovery times primarily affect the human reliability analysis (HRA) results and insights. Even without the increased recovery time, the HRA estimates are very small and are dominated by institutional factors (e.g., training, quality of procedures, staffing). The increased recovery time lowers the uncertainty that these HRA estimates really are very small, but the increased time has not translated into significant changes in the bottom line numerical estimates because quantification of the effect on organizational problems is beyond the state-of-the-art.

3.5 Beyond Design Basis Spent Fuel Pool Accident Scenarios (External Events)

The following is a description of how each of the external event initiators was modeled, a discussion of the frequency of fuel uncovery associated with the initiator, and a description of the most important insights regarding risk reduction strategies for each initiator.

3.5.1 Seismic Events

The staff performed a simplified bounding seismic risk analysis in its June 1999 preliminary draft risk assessment to gain initial insights on seismic contribution to SFP risk. The analysis indicated that seismic events could not be dismissed on the basis of a simplified bounding approach. The additional efforts by the staff to evaluate the seismic risk to spent fuel pools are addressed here and in Appendix 2b.

Spent fuel pool structures at nuclear power plants should be seismically robust. They are constructed with thick reinforced concrete walls and slabs lined with stainless steel liners 1/8 to 1/4 inch thick[5]. Pool walls are about 5 feet thick and the pool floor slabs are around 4 feet thick. The overall pool dimensions are typically about 50 feet long by 40 feet wide and 55 to 60 feet high. In boiling-water reactor (BWR) plants, the pool structures are located in the reactor building at an elevation several stories above the ground. In pressurized-water reactor (PWR) plants, the spent fuel pool structures are located outside the containment structure supported on the ground or partially embedded in the ground. The location and supporting arrangement of the pool structures have an influence on their capacity to withstand seismic ground motion beyond their design basis. The dimensions of the pool structure are generally derived from radiation shielding considerations rather than seismic demand needs. Spent fuel structures at nuclear power plants are able to withstand loads substantially beyond those for which they were designed.

To evaluate the risk from a seismic event at a spent fuel pool, one needs to know both the likelihood of seismic ground motion at various acceleration-levels (i.e., seismic hazard) and the conditional probability that a structure, system, or component (SSC) will fail at a given acceleration level (i.e., the fragility of the SSC). These can be convolved mathematically to arrive at the likelihood that the spent fuel pool will fail from a seismic event. In evaluating the effect of seismic events on spent fuel pools, it became apparent that although information was available on seismic hazard for nuclear power plant sites, the staff did not have fragility analyses of the pools, nor generally did licensees. The staff recognized that many of the spent fuel pools and the buildings housing them were designed by different architect engineers. The pools were built to different standards as the rules were changed.

To compensate for the lack of knowledge of the capacity of the spent fuel pools, the staff and NEI developed a seismic check list and used a generic fragility function characterized by a spectral acceleration value of 1.2 g corresponding to the capacity of the spent fuel pool assured

---

[5]Except at Dresden Unit 1 and Indian Point Unit 1, these two plants do not have any liner plates. They were permanently shutdown more than 20 years ago and no safety significant degradation of the concrete pool structure has been reported.

by the seismic checklist discussed below. During stakeholder interactions, the staff proposed the use of a seismic checklist, and in a letter dated August 18, 1999, NEI proposed a checklist that could be used to show a spent fuel pool would retain its structural integrity at a peak spectral acceleration of about 1.2 g. This value (1.2 g peak spectral acceleration) was chosen in part due to existing databases that could be used in conjunction with the checklist but that only go up to 1.2 g peak spectral acceleration. The checklist was reviewed and enhanced by the staff (See Appendix 2b). The checklist includes elements to assure there are no weaknesses in the design or construction nor any service induced degradation of the pools that would make them vulnerable to failure under earthquake ground motions that exceed their design basis ground motion, but are less than the 1.2 g peak spectral acceleration. The staff has concluded that plants that satisfy the revised seismic checklist can demonstrate with reasonable assurance a high-confidence low-probability of failure (HCLPF)[6] at a ground motion that has a very small likelihood of being exceeded. The staff used a simplified, but slightly conservative method (See Appendix 2b, Attachment 2) to estimate the annual probability of a zirconium fire due to seismic events (including use of site-specific seismic hazard estimates). These calculations resulted in a range of frequencies from less than $1x10^{-8}$ per year to over $1x10^{-5}$ per year, depending on the site and the seismic estimates used.

Since our evaluation is intended to apply to all potential decommissioning sites, the generic values for seismic risk will tend to be bounding. Individual sites may have hazard estimates that are much lower than the sites with the highest hazard estimates. Figures 3.2 and 3.3 show the estimated annual probabilities of a zirconium fire from a seismic event with the probabilities put in order from lowest to highest. Figure 3.2 shows the results of convolving the site-specific Lawrence Livermore National Laboratory (LLNL) seismic hazard estimates (ref. NUREG-1488, "Revised Livermore Seismic Hazard Estimates for 69 Nuclear Power Plant Sites East of the Rocky Mountains," P. Sobel, October 1993) with the generic spent fuel pool fragility analysis, and Figure 3.3 shows the results convoluting the EPRI site-specific seismic hazard estimates (ref. YYYY) in a similar manner[7]. These figures show that for the zirconium fire frequencies using the LLNL estimates, the annual probabilities cluster for most sites just above $1x10^{-6}$ per year and for EPRI just below $5x10^{-7}$ per year. Note that the order of the sites differs somewhat between the EPRI and LLNL estimates. Given that a utility performs and passes the checklist, the staff finds that the frequency of a zirconium fire from a seismic event will be less than $5x10^{-6}$ per year using the LLNL estimates or slightly less than $5x10^{-7}$ per year using the EPRI estimates if the plants mentioned below are excluded and perform plant-specific analyses. In considering these two different sets of hazard estimates, the NRC has previously found that both sets are reasonable and equally valid.

---

[6]The HCLPF value is defined as the peak seismic acceleration at which there is 95 percent confidence that less than 5 percent of the time the structure, system, or component will fail.

[7] At higher accelerations, especially for plant sites east of the Rocky Mountains, there is great modeling uncertainty about the ground motions, return periods, and the possibility of cutoff. There is virtually no data at these acceleration levels, and there is no chance that we will be able to gather such data in the near future (next 100 years).

By passing the checklist, the spent fuel pool will be assured a HCLPF of at least 1.2 g peak spectral acceleration. For many sites (particularly PWRs because their SFPs are closer to ground level or embedded, and therefore, the motion is less amplified), the plant-specific risk may be considerably lower. There are only two plant-specific spent fuel pool fragility analyses of which the staff is aware, and these were used in this analysis.

All decommissioning plants that seek to take advantage of exemptions or rule changes with respect to EP, indemnification, or safeguards would need to perform and pass the checklist. In addition to passing the checklist, some decommissioning plant sites that have hazard estimates with particularly high relative frequencies at a given acceleration would need to perform a plant-specific seismic assessment of their spent fuel pool risk if they wish to gain exemptions from EP, security, or indemnification. These sites are Robinson, Vogtle, Maine Yankee, and Pilgrim east of the Rocky Mountains and San Onofre, Diablo Canyon, and WNP-2 west of the Rocky Mountains. These same plants generally have the largest return frequency if one uses either LLNL hazard estimates or those by EPRI. The staff proposes that licensees for these sites would need to show that their frequency of catastrophic failure of the spent fuel pool due to seismic events is less than $5x10^{-6}$ per year using LLNL hazard estimates or staff approved site-specific hazard curves, if they wished to take advantage of EP, security, or indemnification exemptions or the rulemaking. The staff finds $5X10^{-6}$ per year spent fuel pool failure annual probability to be a reasonable acceptance criterion for the ground motions since it is a factor of 2 less than the $1x10^{-5}$ per year PPG and the estimated frequency of zirconium cladding fires from other initiators is about an order of magnitude lower. Such a margin is warranted due to the uncertainties of the seismic hazard and spent fuel pool fragilities at each site, and to the small margin between seismic risk results and the Quantitative Health Objectives (QHOs) of the NRC.

3.5.2 Aircraft Crashes

The staff evaluated the likelihood of an aircraft crashing into a nuclear power plant site that would seriously damage the spent fuel pool or its support systems (details are in Appendix 2d). The generic data provided in DOE-STD-3014-96 [Ref. 6] were used to assess the likelihood of an aircraft crash into or near a decommissioning spent fuel pool. Aircraft damage can affect the structural integrity of the spent fuel pool or affect the availability of nearby support systems, such as power supplies, heat exchangers, or water makeup sources, and may also affect recovery actions. There are two approaches that can be taken to evaluate the likelihood of an aircraft crash into a structure. The first is called the point target model, which uses the area (length times width) of the target to determine the likelihood that an aircraft will strike the target. The aircraft itself does not have real dimensions when using this model. In the second approach, the DOE model modifies the point target approach to account for the wing span and the skidding of the aircraft after it hits the ground by including the additional area the aircraft could cover. Further, that model takes into account the plane's glide path by introducing the height of the structure into the equation, which effectively increase the area of the target (see Appendix 2d).

The staff estimated the frequency of catastrophic PWR spent fuel pool damage (i.e., the pool is so damaged that it rapidly drains and cannot be refilled from either onsite or offsite resources) resulting from an aircraft crash based on the point target area model for a direct hit on a 100 x 50 foot spent fuel pool. Based on studies in NUREG/CR-5042, "Evaluation of External Hazards to Nuclear Power Plants in the United States," it was estimated that 1-of-2 aircraft are

large enough to penetrate a 5-ft reinforced concrete wall. The conditional probability of a large aircraft crash resulting in penetration of a 5-ft of reinforced concrete wall was taken as 0.45 (interpolated from NUREG/CR-5042). It was further estimated that 1-of-2 crashes result in significant damage to the spent fuel pool resulting in uncovery of the stored fuel (for example, 50 % of the time the location of the damage is above the height of the stored fuel). The estimated range of catastrophic damage to the spent fuel pool, resulting in uncovery of the spent fuel is 1.3×10^{-11} to 6.0×10^{-8} per year. The mean value is estimated to be 4.1×10^{-9} per year. The frequency of catastrophic BWR spent fuel pool damage resulting from a direct hit by a large aircraft is estimated to be the same as that for a PWR. Mark-I and Mark-II secondary containments generally do not appear to have any significant structures that might reduce the likelihood of aircraft penetration, although a crash into 1-of-4 sides of a BWR secondary containment may have a reduced likelihood of penetration due to other structures being in the way of the aircraft. Mark-III secondary containments may reduce the likelihood of penetration somewhat, as the spent fuel pool may be considered to be protected on one side by additional structures. If instead of a direct hit, the aircraft skidded into the pool or a wing clipped the pool, catastrophic damage may not occur. The staff estimated that skidding aircraft will be negligible contributors to the frequency of fuel uncovery resulting from catastrophic failure of the pool as the impact velocity will likely be sufficiently reduced to preclude penetration of the wall. The estimated frequencies of aircraft-induced catastrophic spent fuel pool failure are bounded by other initiators.

The staff estimated the frequency of significant damage to spent fuel pool support systems (e.g., power supply, heat exchanger, or makeup water supply) for three different situations. The first case is based on the DOE model including the glide path and the wing and skid area for a 400 x 200 x 30 foot structure (i.e., the support systems are located inside a large building) with a conditional probability of 0.01 that one of these systems is hit (the critical system occupies a 30 x 30 x 30 foot cube within the large building). This model accounts for damage from the aircraft including, for example, being clipped by a wing. The estimated frequency range for significant damage to the support systems is 1.0×10^{-10} to 1.0×10^{-6} per year. The mean value is estimated to be 7.0×10^{-8} per year. The second case estimates the value for the loss of a support system (power supply, heat exchanger or makeup water supply) based on the DOE model including the glide path and the wing and skid area for a 10 x 10 x 10 foot structure (i.e., the support systems are housed in a small building). The estimated frequency of support system damage ranges from 1.1×10^{-9} to 1.1×10^{-5} per year, with the mean estimated to be 7.3×10^{-7} per year. The third case uses the point model for this 10x10 structure, and the estimated value range is 2.4×10^{-12} to 1.1×10^{-8} per year, with the mean estimated to be 7.4×10^{-10} per year. Depending on the model approach (selection of the target structure size; use of the point target model or the DOE model), the mean value for an aircraft damaging a support system is in the 7×10^{-7} per year, or less, range. This is not the estimated frequency of fuel uncovery or a zirconium fire caused by damage to the support systems, since the frequency estimate does not include recovery, either onsite or offsite. As an initiator to failure of a support system leading to fuel uncovery and a zirconium fire, an aircraft crash is bounded by other more probable events. Recovery of the support system will reduce the likelihood of spent fuel uncovery.

Overall, the likelihood of significant spent fuel pool damage from aircraft crashes is bounded by other more likely catastrophic spent fuel pool failure and loss of cooling modes.

3.5.3 Tornadoes and High Winds

The staff performed a risk evaluation of tornado threats to spent fuel pools (details are in Appendix 2e). It was assumed that very severe tornadoes (F4 to F5 tornadoes on the Fujita scale) would be required to cause catastrophic damage to a PWR or BWR spent fuel pool. These tornados have wind speeds that result in damage characterized as devastating or incredible. The staff then looked at the frequency of such tornadoes occurring and the conditional probability that if such a tornado hit the site, it would seriously damage the spent fuel. To do this the staff examined the frequency and intensity of tornadoes in each of the continental U.S. using the methods described in NUREG/CR-2944 [Ref. 7]. The frequency of having an F4 to F5 tornado is estimated to be 5.6×10^{-7} per year for the central U.S., with a U.S. average value of 2.2×10^{-7} per year.

The staff then considered what level of damage an F4 or F5 tornado could do to a spent fuel pool. Based on the buildings housing the spent fuel pools and the thickness of the spent fuel pools themselves, the conditional probability of catastrophic failure given a tornado missile is very low. Hence, the overall frequency of catastrophic pool failure caused by a tornado is extremely low (i.e., the calculated frequency of such an event is less than 1×10^{-9} per year).

It was assumed that an F2 to F5 tornado would be required if significant damage were to occur to spent fuel pool support systems (e.g., power supply, cooling pumps, heat exchanger, or makeup water supply). These tornados have wind speeds that result in damage characterized as significant, severe, or worse. The frequency of having an F2 to F5 tornado is estimated to be 1.5×10^{-5} per year for the central U.S., with a U.S. average value of 6.1×10^{-6} per year. This is not the estimated frequency of fuel uncovery or a zirconium fire caused by damage to the support systems, since the frequency estimate does not include recovery, either on-site or off-site. As an initiator to failure of a support system leading to fuel uncovery and a zirconium fire, a tornado is bounded by other more probable events. Recovery of the support system(s) will reduce the likelihood of spent fuel uncovery.

Missiles generated by high winds (for example, straight winds or hurricanes) are not as powerful as those generated by tornados. Therefore high winds are estimated to have a neglible impact on the catastrophic failure of the spent fuel pool resulting in fuel uncovery. Long term loss of off-site power due to straight winds is evaluated in Section 3.4.4, Loss of Off-Site Power from Severe Weather Events.

The staff estimated the frequency of significant damage to spent fuel pool support systems from straight line winds to be very low. Damage was assumed to be caused by building collapse. Based on the construction requirements for secondary containments, the staff believes that the buildings containing BWR spent fuel pools are sufficiently robust that straight line winds will not challenge the integrity of the building. The staff assumes buildings covering PWR spent fuel pools have a concrete foundation that extends part way up the side of the building. The exterior of the rest of the building has a steel frame covered by corrugated steel siding. The PWR spent fuel buildings are assumed to be constructed to American National Standards Institute (ANSI) or American Society of Civil Engineers (ASCE) standards. Based on these assumptions, the staff believes that straight line winds will fail buildings housing PWR spent fuel pools at a frequency of 1×10^{-3} per year or less. This failure rate for support systems is subsumed in the initiating event

frequency for loss of offsite power from severe weather events. The event tree for this initiator takes into account the time available for recovery of spent fuel pool cooling (approximately 195 hours for 1-year old PWR fuel and 253 hours for BWR fuel).

Table 3.3 Time to Heat Up and Boil Off SFP Inventory Down to 3 Feet Above Top of Fuel (60 GWd/MT)

DECAY TIME	PWR	BWR
1 year	195 hours	253 hours
2 years	272 hours	337 hours
5 years	400 hours	459 hours
10 years	476 hours	532 hours

Figure 3.2 Frequency of Catastrophic Failure of Spent Fuel Pools Assuming Pools Have a HCLPF of 1.2 g Peak Spectral Acceleration
(LLNL seismic hazard curves, sites ranked lowest to highest frequency)

Figure 3.3 Frequency of Catastrophic Failure of Spent Fuel Pools Assuming Pools Have a HCLPF of 1.2 g Peak Spectral Acceleration
(EPRI seismic hazard curves, sites ranked lowest to highest frequency)

6.0 References

References for Executive Summary

1. U.S. Code of Federal Regulations, "Domestic Licensing of Production and Utilization Facilities," Part 50, Title 10, "Energy."
2. U.S. Nuclear Regulatory Commission, "An Approach for Using Probabilistic Risk Assessment In Risk-Informed Decisions On Plant-Specific Changes to the Licensing Basis," Regulatory Guide 1.174, July 1998.
3. Dana A. Powers, Chairman of the Advisory Committee on Reactor Safeguards, U.S. Nuclear Regulatory Commission, letter to Dr. William D. Travers, U.S. Nuclear Regulatory Commission, "Spent Fuel Fires Associated With Decommissioning," November 12, 1999.
4. U.S. Code of Federal Regulations, "Standards for Protection Against Radiation," Part 20, Title 10, "Energy."

References for Section 1.0

1. U.S. Code of Federal Regulations, "Domestic Licensing of Production and Utilization Facilities," Part 50, Title 10, "Energy."

References for Section 2.0

1. U.S. Nuclear Regulatory Commission, "Use of Probabilistic Risk Assessment Methods in Nuclear Regulatory Activities; Final Policy Statement," Federal Register, Vol. 60, No. 158, August 16, 1995/ Notices.
2. U.S. Nuclear Regulatory Commission, "An Approach for Using Probabilistic Risk Assessment In Risk-Informed Decisions On Plant-Specific Changes to the Licensing Basis," Regulatory Guide 1.174, July 1998.
3. Dana A. Powers, Chairman of the Advisory Committee on Reactor Safeguards, U.S. Nuclear Regulatory Commission, letter to Dr. William D. Travers, U.S. Nuclear Regulatory Commission, "Spent Fuel Fires Associated With Decommissioning," November 12, 1999.
4. U.S. Code of Federal Regulations, "Requirements for Monitoring the Effectiveness of Maintenance at Nuclear Power Plants," Section 65, Part 50, Title 10, "Energy."

References for Section 3.0

1. Dana A. Powers, Chairman of the Advisory Committee on Reactor Safeguards, U.S. Nuclear Regulatory Commission, letter to Dr. William D. Travers, U.S. Nuclear Regulatory Commission, "Spent Fuel Fires Associated With Decommissioning," November 12, 1999.
2. U.S. Nuclear Regulatory Commission, "Regulatory Analysis for the Resolution of Generic Issue 82, "Beyond design Basis Accidents in Spent Fuel Pools," NUREG-1353, April 1989.
3. U.S. Nuclear Regulatory Commission, " Operating Experience Feedback Report-Assessment of Spent Fuel Cooling," NUREG-1275, Volume 12, February 1997.

4. Sailor, et.al., "Severe Accidents in Spent Fuel Pools in Support of Generic Issue 82", NUREG/CR-4982 (BNL-NUREG-52093), July 1987.
5. U.S. Nuclear Regulatory, "Control of Heavy Loads at Nuclear Power Plants, Resolution of Generic Technical Activity A-36," NUREG-0612, July 1980.
6. DOE-STD-3014-96, "Accident Analysis for Aircraft Crash Into Hazardous Facilities," U.S. Department of Energy, October 1996.
7. NUREG/CR-2944, "Tornado Damage Risk Assessment," Brookhaven National Laboratory, September 1982.

References for Section 4.0

1. Lynnette Hendricks, Nuclear Energy Institute, letter to Office of Nuclear Reactor Regulation, dated November 12, 1999.
2. U.S. Nuclear Regulatory Commission, "Boraflex Degradation in Spent Fuel Pool Storage Racks," Generic Letter 96-04, June 1996.
3. U.S. Code of Federal Regulations, "Emergency Plans," Section 47, Part 50, Title 10, "Energy."
4. U.S. Code of Federal Regulations, "Emergency Planning and Preparedness For Production and Utilization," Appendix E, Part 50, Title 10, "Energy."
5. U.S. Code of Federal Regulations, "Planning Basis For The Development Of State and Local Government Radiological Emergency Response Plans In Support of Light Water Nuclear Power Plants," NUREG-0396, December 1978.
6. NUREG-0654/FEMA-REP-1, Revision 1, "Criteria for Preparation and Evaluation of Radiological Emergency Response Plans and Preparedness in Support of Nuclear Power Reactors", November 1980.
7. U.S. Code of Federal Regulations, "Requirements for Physical Protection of Licensed Activities in Nuclear Power Reactors Against Radiological Sabotage," Section 55, Part 73, Title 10, "Energy."
8. U.S. Code of Federal Regulations, "Licensing Requirements For the Independent Storage of Spent Nuclear Fuel And High-Level Radioactive Waste," Part 72, Title 10, "Energy."
9. U.S. Code of Federal Regulations, "Fitness for Duty Programs," Part 26, Title 10, "Energy."
10. U.S. Code of Federal Regulations, "Financial Protection Requirements and Indemnity Agreements," Part 140, Title 10, "Energy."
11. U.S. Nuclear Regulatory Commission, "Financial Protection Required of Licensees of Large Nuclear Power Plants During Decommissioning," SECY-93-127, dated July 13, 1993.

7.0 Acronyms

ACRS	Advisory Committee on Reactor Safeguards
ANSI	American National Standard Institute
ANS	American Nuclear Society
ASB	NRC Auxiliary Systems Branch (Plant Systems Branch)
atm	atmosphere
BNL	Brookhaven National Laboratory
BTP	branch technical position
BWR	boiling water reactor
CFD	computational fluid dynamics
CFM	cubic feet per minute
CFR	Code of Federal Regulations
DOE	Department of Energy
DSP	decommissioning status plant
ECCS	emergency core cooling system
EP	emergency plan
EPRI	Electric Power Research Institute
ET	event tree
FFU	frequency of fuel uncovery
FT	fault tree
gpm	gallon(s) per minute
GSI	generic safety issue
GWD	gigawatt-day
HCLPF	High-Confidence/Low probability of failure
HRA	human reliability analysis
HVAC	heating, ventilation, and air conditioning
IDC	industry decommissioning commitments
INEEL	Idaho National Engineering and Environmental Laboratory
ISFSI	independent spent fuel pool installation
kW	kilowatt
LERF	large early release frequency
LLNL	Lawrence Livermore National Laboratory
LOSP	loss of off-site power
LWR	light water reactor
MR	maintenance rule
MW	megawatt

MWD	megawatt-day
MTU	megaton uranium
NEI	Nuclear Energy Institute
NRC	Nuclear Regulatory Commission
NRR	NRC Office of Nuclear Reactor Regulation
POE	probability of exceedance
POF	probability of failure
PPG	pool performance guideline
PRA	probabilistic risk assessment
PWR	pressurized water reactor
QA	quality assurance
RES	NRC Office of Research
RG	regulatory guide
SDAs	staff decommissioning assumptions
SF	spent fuel
SFP	spent fuel pool
SFPC	spent fuel pool cooling system
SFPCC	spent fuel pool cooling and cleaning system
SHARP	Spent Fuel Heatup Analytical Response Program
SNL	Sandia National Laboratory
SRM	staff requirements memorandum
SRP	standard review plan
SSC	systems, structures, and components
SSE	safe shutdown earthquake
TS	technical specification
UKAEA	United Kingdom Atomic Energy Authority
WIPP	Waste Isolation Pilot Plant

Appendix 1 Thermal Hydraulics

1. Spent Fuel Heatup Analyses

Spent fuel heatup analyses model the decay power and configuration of the fuel to characterize the thermal hydraulic phenomena that will occur in the SFP and the building following a postulated loss of water accident. This appendix reviews the existing studies on spent fuel heatup and zirconium oxidation, the temperature criteria used in the analyses, and how it applies to decommissioned plants.

1.1 Spent Fuel Failure Criteria

Several different fuel failure criteria have been used in previously NRC-sponsored SFP accident studies. Benjamin, et. al used the onset of runaway fuel clad oxidation as the fuel failure criterion in NUREG/CR-0649 [Ref. 1]. This criterion was criticized because clad rupture can occur at a relatively low temperature causing a gap release. The consequences of gap release can be significant if the radioactive iodine has not yet decayed to insignificant amounts. SHARP calculations [Ref. 2] used the onset of clad swelling as an acceptance criterion for prevention of fuel failure. The onset of clad swelling leading to gap release occurs at approximately 565 °C, which corresponds to the temperature for 10-hour creep rupture time [Ref. 3]. A cladding temperature of 570 °C is used as a thermal limit under accident conditions for licensing of spent fuel dry storage casks.

The most severe fuel damage would be caused by rapid, runaway zirconium oxidation. This would lead to significant fission product release even after the gap activity has become insignificant. The onset of rapid oxidation may occur as low as 800 °C [Ref. 4]. Runaway oxidation can raise clad and fuel temperatures to approximately 2000 °C which corresponds to the melting temperature of zirconium. The release of fission products trapped in the fuel can occur at fuel temperatures of approximately 1400-1500 °C. Runaway oxidation starting in a high-powered channel could also propagate through radiative and convective heat transfer to lower power assemblies because of the large heat reaction in zirconium oxidation.

There are several other temperature thresholds that may be of concern in SFP accidents. The melting temperature of aluminum, which is a constituent in BORAL poison plates in some types of the spent fuel storage racks, is approximately 640 °C. No evidence was found that boron carbide would dissolve in the aluminum forming a eutectic mixture that liquefies at a temperature below the melting point of aluminum. However, if it is possible for a molten material to leak from the stainless steel spent fuel storage rack case, melting and relocation of the aluminum in the boron carbide-aluminum composite may cause flow blockages that increase hydraulic resistance. No realistic evaluation of melting and relocation of aluminum or aluminum/boron carbide eutectic has been performed.

Another concern is the structural integrity of the fuel racks at high temperatures. Several eutectic mixtures known from reactor severe accident research [Ref. 5] may be important in SFP accidents. As previously stated, the formation of an eutectic mixture allows liquification and loss of structural integrity for a mixture of materials at a lower temperature than the melting point of any of the component materials. Steel and zirconium form an eutectic mixture at approximately 935 °C. Steel and boron carbide form a eutectic mixture at approximately

1150 °C. The steel racks may not be able to maintain structural integrity because of the sustained loads at high temperatures. Loss of rack integrity may affect the propagation of a zirconium fire.

If the gap radioactivity inventory is significant, then the spent fuel cladding temperature must be kept below 565 °C. If the consequences of aluminum/boron carbide relocation are acceptable, then 800 °C is a reasonable deterministic acceptance temperature, if uncertainties are less than the margin to 800 °C, and the effects of higher temperatures on the material are modeled. Otherwise, the temperature must be lower than the aluminum melting point (640 °C) or the aluminum/boron carbide eutectic melting point.

1.2 Evaluation of Existing Spent Fuel Heatup Analyses

In the 1980's, severe accidents in operating reactor SFPs were evaluated to assess the significance of the results of some laboratory studies on the possibility of self-sustaining zirconium oxidation and fire propagation between assemblies in an air-cooled environment, and also to assess the impact of the increase in the use of high density spent fuel storage racks on severe accidents in spent fuel pools. This issue was identified as Generic Safety Issue (GI) 82. Sandia National Laboratory (SNL) and Brookhaven National Laboratory (BNL) used the SFUEL and SFUEL1W computer codes to calculate spent fuel heatup in these studies. While decommissioned plants were not addressed in the study, many of the insights gained from these studies are applicable to decommissioned plants.

More recently, BNL developed a new computer code, SHARP, that was intended to provide a simplified analysis method to model plant-specific spent fuel configurations for spent fuel heatup calculations at decommissioned plants. Some of this work was built on the assumption used by SNL and BNL in their studies in support of GI 82.

1.2.1 SFUEL Series Based Analyses

Extensive work on the phenomena of zirconium oxidation in air for a SFP configuration was performed by SNL and BNL in support of GI 82. SNL investigated the heatup of spent fuel, the potential for self-sustaining zirconium oxidation, and the propagation to adjacent assemblies [Ref. 1, 6]. SNL used SFUEL and SFUEL1W computer codes to analyze the thermal-hydraulic phenomena, assuming complete drainage of the SFP water. In NUREG/CR-4982 [Ref. 4], BNL extended the SNL studies on the phenomenology of zirconium-air oxidation and its propagation in spent fuel assemblies. The SFUEL series of codes includes all modes of heat transfer, including radiation. However, radiation heat transfer may have been underestimated due to the assumed fuel bundle arrangement.

In NUREG/CR-0649, SNL concluded that decay heat and configuration are important parameters. SNL found that key configuration variables are the baseplate hole size, downcomer width, and the availability of open spaces for airflow. They also found that building ventilation is an important configuration variable.

The draft SNL report investigated the potential for oxidation propagation to adjacent assemblies. If decay heat is sufficient to raise the clad temperature in a fuel assembly to within approximately one hundred degrees of the point of runaway oxidation, then the radiative heat from an adjacent assembly that reached the onset of rapid oxidation could raise the temperature of the first assembly to the runaway oxidation temperature. The report also

discusses small-scale experiments involving clad temperatures greater than 1000 °C. SNL hypothesized that molten zirconium material would slump or relocate towards the bottom of the racks and consequently would not be involved in the oxidation reaction. NUREG/CR-4982 did not allow oxidation to occur at temperatures higher than 2100 °C to account for the zirconium melting and relocation. Otherwise, temperatures reached as high as 3500 °C. It was felt that not cutting off the oxidation overstated the propagation of a zirconium fire because of the fourth power temperature dependence of the radiation heat flux. The SFUEL series of codes did not model melting and relocation of materials.

In NUREG/CR-4982, BNL reviewed the SFUEL code and compared it to the SNL small-scale experiments and concluded that SFUEL was a valuable tool for assessing the likelihood of self-sustaining clad oxidation for a variety of spent fuel configurations in a drained pool. SNL reported the following critical decay times in NUREG/CR-0649 based on having no runaway oxidation. Critical decay time is defined as the length of time after shutdown when the most recently discharged fuel temperature will not exceed the chosen fuel failure criteria when cooled by air only.

700 days	PWR, 6 kW/MTU decay power per assembly, high density rack, 10.25" pitch, 5" orifice, 1-inch from storage wall
280 days	PWR, same as above except for 1 foot from storage wall
180 days	BWR, 14 kW/MTU decay power per assembly, cylindrical baskets, 8.5" pitch, 1.5" orifice
unknown	BWR, high-density rack, SFUEL1W code was limited to computation of BWR low-density racks.

High-density racks with a 5-inch orifice are the most representative of current storage practices. A critical decay time for high-density BWR racks was not provided due to code limitations. Low-density and cylindrical storage rack configurations are no longer representative of spent fuel storage. All currently operating and recently shutdown plants have some high-density racks in the pool. For an assembly in a high-density PWR rack with a 5-inch orifice, a decay power below 6 kW/MTU did not result in runaway zirconium oxidation. All of these estimates were based on perfect ventilation (i.e., unlimited, ambient-temperature air) and burnup rates of 33 GWD/MTU. Currently, some PWRs are permitted to burn up to 62 GWD/MTU and some BWRs to 60 GWD/MTU. For fuel burnup of 60 GWD/MTU, the staff estimates the decay time for a bundle to reach 6 kW/MTU will increase from 2 years to approximately 3 years. Therefore, the staff expects the difference between critical decay times for PWRs and BWRs to decrease and that the BWR critical decay time for current burnups and rack designs would now be longer than the SNL estimate for high-density PWR racks. The SNL calculations also do not appear to have included grid spacer loss coefficients, which can have a significant effect since the resistance of the grid spacers is greater than the resistance of a 5-inch orifice. There is no mixing between the rising air leaving the fuel racks, and the relatively cooler air moving down into the pool. Including the grid spacer resistance, accounting for mixing and limiting the building ventilation flow to rated conditions, will result in the critical decay power to be less than 6 kW/MTU. The SNL calculations may have understated the effective radiation heat transfer heat sink due to the assumed fuel geometry in the calculations. A more realistic fuel configuration pattern in the SFP would give a better estimate of the radiation heat sink and raise the critical decay power needed for significant oxidation.

While the studies in support of GSI 82 provided useful insights to air-cooled spent fuel assemblies, it is the opinion of the staff that they do not provide an adequate basis for exemptions. The studies were not meant to establish exemption criteria and lack sufficient information for all the parameters that could affect the decay time. Additionally, the reports are based on burnup values at that time. Since burnup values have increased, the results may not be directly applicable to today's spent fuel.

The general conclusions and the phenomena described in the studies assist in assessing issues for decommissioned plants. However, the calculated decay time values do not represent current plant operational and storage practices.

1.2.2 SHARP Based Analyses

In NUREG/CR-6451 [Ref. 7], BNL investigated spent fuel heatup that could lead to a zirconium fire at permanently shutdown plants. BNL developed a new computer code, SHARP (Spent Fuel Heatup Analytical Response Program), to calculate critical decay times to preclude zirconium oxidation for spent fuel. The code was intended to study thermal hydraulic characteristics and to calculate spent fuel heatup up to temperatures of approximately 600 °C. SHARP is limited to low temperatures since it lacks models for radiation heat transfer, zirconium oxidation, and materials melting and relocating. SHARP also lacks modeling for grid spacer losses and neglects mixing between the rising hot air and the falling cooler air in the SFP. BNL reported the following generic critical decay times using the SHARP code.

17 months	for a PWR, high density rack, 60 GWD/MTU burnup; 10.4" pitch; 5" orifice
7 months	for a BWR, high density rack, 40 GWD/MTU burnup; 6.25" pitch; 4" orifice

The above decay times are based on a maximum cladding temperature of 565 °C. The parameters listed with the critical decay times are generally representative of operating practices. Current fuel burnups in some plants, however, have increased to values higher than those used by BNL and perfect ventilation was assumed, which could lead to an underestimation of the critical decay times.

The SHARP code was not significantly benchmarked, validated or verified. The critical decay times above are shorter than those calculated in NUREG/CR-0649 and NUREG/CR-4982, particularly when the lower cladding temperature used for fuel failure and the higher decay heats used in the earlier analyses are taken into account. This appears to be driven in part, by the fact that the decay heat at a given burnup in the SHARP calculations is significantly lower than what is used in the SFUEL calculations. The staff has identified several areas that require code modifications, which will increase the calculated critical decay times. It is not adequate for use as technical bases by licensees without further code modifications and verification. NUREG/CR-6541 was intended as an assessment to steer rulemaking activities. The report was neither intended nor structured to provide a basis for exemptions. The staff does not rely on this study for heatup analysis information due to the code that the decay time conclusions were based upon.

1.3 Heatup Calculation Uncertainties and Sensitivities

The phenomenology needed to model spent fuel heatup is dependent on the chosen cladding temperature success criterion and the assumed accident scenario. Many assumptions and modeling deficiencies exist in the current calculations. The staff reviewed the models to assess

the impact of those modeling assumptions. Some of these uncertainties for the SFUEL series codes are further discussed in NUREG/CR-4982. For cases of flow mixing, decay heat, bundle flow resistance and other severe accident phenomena, additional information is provided here.

Calculations performed to date assume that the building, fuel, and rack geometry remain intact. This would not be a valid assumption if a seismic event or a cask drop damaged some of the fuel racks or the building. Rack integrity may not be a good assumption after the onset of significant zirconium oxidation due to fuel failure criteria issues discussed in Section 1.1. The building may also be hot enough to ignite other materials. Assuming that the racks remain intact is the most optimistic assumption that can be made about the rack geometry. Any damage to the racks or the building could significantly reduce the coolability of the fuel.

Previous SFUEL, SFUEL1W, and SHARP calculations, used in the resolution of GI 82 and decommissioning studies, used a perfect ventilation assumption. With the perfect ventilation assumption an unlimited amount of fresh, ambient-temperature air is available. This assumption would be valid if the building failed early in the event or if large portions of the walls and ceilings were open. If the building does not fail, the spent fuel building ventilation flow rate would dictate the airflow available. Mixing between the rising hot air and the descending cooler air in the spent fuel pool is not modeled in the codes.

The spent fuel building ventilation flow rate is important in determining the overall building energy balance. Airflow through the building is an important heat removal mechanism. Most of the air would recirculate in the building and the air drawn under the racks would be higher than ambient temperature and, therefore, less heat removal would occur. Airflow also provides a source of oxygen for zirconium oxidation. Sensitivity studies have shown that heatup rates increase with decreasing ventilation flow, but that very low ventilation rates limit the rate of oxidation. Other oxidation reactions (fires) that occur in the building will also deplete available oxygen in the building. Zirconium-Nitrogen reaction modeling is not included in the SFUEL code and may have an impact on zero and low ventilation cases. GSI 82 studies concluded that the perfect ventilation assumption was more conservative than no ventilation because the oxidation reaction became oxygen starved with no ventilation. These studies did not consider the failure modes of the building under high temperature scenarios. Intermediate ventilation rate results were not studied and give longer critical decay times than the perfect ventilation case.

A key fuel heat removal mechanism is buoyancy-driven natural circulation. The calculated airflow and peak temperatures are very sensitive to flow resistances in the storage racks, fuel bundles and downcomer. The downcomer flow resistance is determined by the spacing between the fuel racks and the wall of the SFP. The storage rack resistance is determined by the orifice size at the bottom entrance to the fuel bundle. Smaller inlet orifices have higher flow resistance. As shown by SFUEL and SHARP calculations, changes in the rack-wall spacing and the orifice size over the range of designs can shift critical decay times by more than a year. The fuel bundle flow resistance is determined by the rod spacing, the grid spacers, intermediate flow mixers and the upper and lower tie plates. SFUEL and SHARP calculations have neglected the losses from the grid spacers, intermediate flow mixers and the tie plates. These flow resistances will be higher than those from the rack inlet orifice in some cases. Therefore, inclusion of this additional flow resistance may significantly extend the critical decay time for some cases. NUREG/CR-4982 concluded that the largest source of uncertainty was due to the natural circulation flow rates.

The downcomer and bundle inlet air temperatures and mass flow rates are important in determining the peak cladding temperature. The extent of flow mixing will determine the air temperatures at the downcomer and bundle inlet. The SFUEL and SHARP calculations assume a well-mixed building air space. The downcomer inlet temperature is set equal to the building temperature. This assumption neglects the mixing that occurs between the hot air rising from the bundles and the cooler air descending down the SFP wall. Computational fluid dynamics calculations performed by the NRC using the FLUENT code and Pacific Northwest National Laboratory using the TEMPEST code indicates that the well-mixed building is not a good assumption. The mixing that occurs between the cool air flowing down into the pool and the hot air flowing up out of the fuel bundles can significantly increase peak cladding temperatures. Even using different turbulent mixing models can affect the peak temperatures by approximately 100 °C. The calculations indicate that fully 3-dimensional calculations may be needed to accurately predict the mixing because unrealistic flow topologies in 2-dimensional approximations may overstate the mixing. The calculations also indicate that the quasi-steady state assumptions for conditions above the fuel rack may not be appropriate. Time varying temperature fluctuations on the order of 100 °C have been observed in 3D calculations.

Radiation heat transfer is important in spent fuel pool heatup calculations. Radiation heat transfer can affect both the onset of a zirconium fire and the propagation of a fire. Both the SFP loading pattern and the geometry of the fuel racks can affect the radiation heat transfer between adjacent bundles. Simple gray body calculations show that at clad temperatures of 800 °C, a temperature difference of 100 °C between adjacent bundles would cause the radiation heat flux to exceed the critical decay power of 6 kW/MTU. Therefore, the temperature difference that could be maintained between adjacent bundles is highly constrained by the low decay heat levels. SFUEL calculations performed by SNL and BNL included radiation heat transfer, but the radiation heat transfer was underpredicted since the spent fuel placement is two-dimensional and the hottest elements are in the middle of the pool with cooler elements placed progressively toward the pool walls. Heat transfer between hotter and cooler assemblies has the potential to be significantly higher if the fuel bundles were intermixed in a realistic loading pattern.

At temperatures below 800 °C, the SFP heat source is dominated by the spent fuel decay heat. SNL and BNL found that, for high-density PWR racks, that 6 kW/MTU was the critical decay heat level for a zirconium fire to occur in configurations resembling current fuel storage practices. At the fuel burnups used in the calculations, this critical decay heat level was reached after two years. Decay heat calculations in NUREG/CR-5625 [Ref. 8] were performed to be the basis for calculating fuel assembly decay heat inputs for dry cask storage analyses. These decay heat calculations are consistent with the decay heat used in SFUEL calculations. Extrapolation of the decay heat calculations from NUREG/CR-5625 to current burnups indicate that approximately 3 years will be needed to reach a decay heat of 6 kW/MTU. The extrapolation has been confirmed to provide a reasonable decay heat approximation by performing ORIGEN calculations that extend to higher burnup. The critical decay heat may actually be as low as 3kW/MTU when in-bundle peaking effects, higher density rack configurations and rated build ventilation flows are taken into account.

Several licensees have proposed using the current Standard Review Plan (NUREG-0800) Branch Technical Position ASB 9-2 decay heat model for SFP heatup calculations. Using ASB 9-2 decay heat with a "k factor" of 0.1 produces non-conservative decay heat values in the range of 1 to 4 years after shutdown. ASB 9-2 explicitly states that it is good for times less than 10,000,000 seconds (~ 116 days). The basis of ASB 9-2 is the 1971 ANS draft decay heat

standard. The standard gives "k factors" to use beyond 10,000,000 seconds. The staff has found that a "k factor of 0.2" will produce conservative decay heat values compared to ORIGEN calculations for the range of 1 to 4 years after shutdown.

1.4 Zirconium Oxidation Temperature

At temperatures below the onset of self-sustaining oxidation, decay heat of the fuel dominates the heat source. When zirconium reaches temperatures where air oxidation is significant, the heat source is dominated by oxidation. The energy of the reaction is 262 kcal per mole of zirconium. In air, the oxidation rate and the energy of the reaction is higher than zirconium-steam oxidation. Much less data exists for zirconium-air oxidation than for zirconium-steam oxidation. A large amount of data exists for zirconium-steam oxidation because of the large amount of research performed under the ECCS research program [Ref. 9]. If all of the zirconium in a full 17x17 PWR fuel bundle fully oxidizes in air over the period of an hour, the average power from the oxidation is 0.3 MW. The critical decay heat as determined with SFUEL is approximately 2.7 kW for the bundle. The oxidation power source would amount to approximately 60 MW if the whole core was burning. A 20,000 cubic feet per minute (CFM) airflow rate is needed to support that reaction rate based on 100-percent oxygen utilization. The SFUEL oxidation rate was modeled using several parabolic rate equations based on available data. SFUEL had limited verification against SNL experiments that studied the potential of zirconium fire propagation. BNL determined that although they could not find a basis for rejecting the oxidation rate model used in SFUEL, uncertainties in oxidation of zirconium in air could change the critical decay heat by up to 25-percent. It was found that the onset of runaway zirconium oxidation could occur at temperatures as low as 800 °C. Different alloys of zirconium had oxidation rates that vary by as much as a factor of four. Apparently it was found that oxidation in air was worse than oxidation in pure oxygen. This suggests that the nitrogen concentration can have a significant impact on the oxidation rate. Since the relative concentration of oxygen and nitrogen varies as oxygen is consumed this causes additional uncertainty in the oxidation rate. The oxidation was cut off at 2100 °C in the BNL calculations in support of GI 82. This was done to simulate zirconium clad relocation when the melting point of zirconium was reached. If the oxidation was not cut off, temperatures could reach as high as 3500 °C. It was felt the propagation to adjacent bundles was overpredicted if no cutoff temperature is used due to the fourth power dependence of temperature on the radiation heat fluxes.

The combustion literature cited in the June 1999 draft report shows that there is a large range in the temperature for zirconium ignition in air. Evidence cited from the literature states that bulk zirconium cannot ignite at temperatures lower than 1300-1600 °C. It is known from the extensive emergency core cooling system (ECCS) and severe accident research programs that zirconium-steam runaway oxidation occurs at temperatures below 1300 °C. Since oxidation in air occurs more rapidly than oxidation in steam, temperatures in this range are not credible for the onset of runaway oxidation in air. Correlations listed [Ref. 10] give ignition temperatures for small zirconium samples in the range of runaway oxidation computed by the SFUEL series codes when the geometry factors calculated from zirconium cladding are input into the correlations. Only one reference [Ref. 11] appears to be applicable to zirconium oxidation in sustained heating of fuel rods. In the referenced test, sections of zirconium tubing were oxidized at temperatures of 700 °C, 800 °C and 900 °C for 1 hour. The average oxidation rate

tripled for each 100 °C increase in temperature. This is consistent with the change in oxidation rates predicted by the parabolic rate equations examined in NUREG/CR-4982. The zirconium combustion literature reviewed for ignition temperature did not discount or provide alternate oxidation rates that should be used in the SFUEL calculations.

As discussed earlier, current operating plants burn fuel to higher levels than used in the evaluations. The BNL and SNL studies in support of GI 82 represented operating practices of the 1980's with burnup level around 33 GWD/MTU. In NUREG/CR-6451, BNL used burnup values of 40 and 60 GWD/MTU for BWRs and PWRs, respectively. While these values are closer to current operating practices, they still underestimate peak burnup values. Additionally, the decay heat at the same burnup level used in the SHARP analyses is significantly lower than that used in the SFUEL analyses. Given that burnup is an important parameter for determining the critical decay time, this is a significant change. The increase in burnup level will increase the critical decay time needed to ensure that air-cooling is sufficient to maintain the zirconium cladding below the oxidation temperature.

The BNL and SNL studies in support of GI 82 represented storage practices of the 1980's when plants were starting to convert to high-density storage racks. The studies did not address high density BWR racks, and the high-density PWR racks in the reports were not as dense as the designs used by many plants today. The higher density racking currently used will decrease the airflow available for heat removal. Therefore, lower decay heat values are needed to ensure that air-cooling is sufficient to maintain the zirconium clad below the oxidation temperature.

1.5 Estimated Heatup Time of Uncovered Spent Fuel

The staff recognized that the decay time necessary to ensure that air cooling was adequate to remain below the temperature of self-sustaining zirconium oxidation was a conservative criteria for the reduction in emergency preparedness criteria. Using the fact that the decay heat of the fuel is reducing with time, credit could be given, if quantified, for the increasing length of time for the accident to progress after all water is lost from the SFP. The staff sought to quantify the decay time since final shutdown such that the heatup time of the fuel after uncovery was adequate for effective protective measures using local emergency response.

The heatup time of the fuel depends on the amount of decay heat in the fuel, and the amount of heat removal available for the fuel. The amount of decay heat is dependent on the burnup. The amount of heat removal is dependent on several variables, as discussed above, that are difficult to represent generically without making a number of assumptions that may be difficult to confirm on a plant and event specific basis.

For the calculations, the staff used a decay heat per assembly and divided it equally among the pins. It assumed a 9X9 assembly for the BWRs and a 17x17 assembly for the PWRs. Decay heats were computed using an extrapolation of the decay power tables in NUREG/CR-5625 [Ref. 8]. The decay heat in NUREG/CR-5625 is based on ORIGEN calculations. The tables for the decay heat extend to burnups of 50 GWD/MTU for PWRs and 45 GWD/MTU for BWRs. The staff recognizes that the decay heat is only valid for values up to the maximum values in the tables, but staff ORIGEN calculations of the decay power, with respect to burnup for values in the table, indicate that extrapolation provides a reasonable and slightly conservative estimate of the decay heat for burnup values beyond the limits of the tables. Current peak bundle average burnups are approximately 50 GWD/MTU for BWRs and 55 GWD/MTU for PWRs.

The BWR decay heat was calculated using a specific power of 26.2 MW/MTU. The PWR decay heat was calculated using a specific power of 37.5 MW/MTU. Both the PWR and BWR decay heats were calculated for a burnup of 60 GWD/MTU and include an uncertainty factor of 6 percent.

The staff has also considered a scenario with a rapid partial draindown to a level at or below the top of active fuel with a slow boiloff of water after the draindown. This could occur if a large breech occured in the liner at or below the top of active fuel. Section 5.1 of NUREG/CR-0649 analyzes the partial draindown problem. For the worst case draindown and a lower bound approximation for heat transfer to the water and the building the heatup time is slightly less than the heatup time for the corresponding air cooled case. More accurate modeling could extend the heatup time to be comparable to or longer than the air cooled case.

Calculations, assuming an instant draindown of the pool and air-cooling, only show a heatup time to fission product release of 10 to 15 hours at 1 year after shutdown. The worst case partial draindown could release fission products in 5 to 10 hours at 1 year after shutdown.

1.6 Critical Decay Times to Reach Sufficient Air Cooling

Based on the above discussion, the staff concludes the following with respect to critical decay times. Calculations using the SFUEL code in support of GI-82 have determined a critical specific decay heat of 6 kW/MTU is needed for the onset of runaway zirconium oxidation. The 6 kW/MTU estimate calculated using SFUEL in a high-density storage rack configuration is reasonable and is based on the best calculations to date. However, this estimate is based on perfect ventilation conditions in the building and lower density rack configurations than exist today.

For high burnup PWR and BWR fuel, the staff estimates it will take approximately 3 years to reach the critical decay heat level cited in NUREG/CR-4982. Better modeling of flow mixing and accounting for the grid spacer and tie plate flow resistance could reduce the critical decay power level and increase the critical decay time beyond 3 years, but this may be counterbalanced by increased radiation heat transfer from realistic fuel bundle loading. Other assumptions, such as imperfect ventilation, could extend the critical decay time for the onset of a zirconium fire by 1 to 2 years. The critical decay heat may actually be as low as 3 kW/MTU when peak to average rod bundle peaking effects and higher density rack configurations are taken into account. Accounting for imperfect ventilation and higher density spent fuel storage in the racks, the staff estimates it will take approximately 4 to 5 years to reach a decay heat of 3 kW/MTU for current plant fuel burnups. Plant-specific calculations using fuel decay heat based on the actual plant operating history and spent fuel configurations could yield significantly shorter critical decay times. Calculations performed using checkerboard fuel loadings indicate that the critical decay time can be reduced by one year or more if the highest power fuel is interspersed with low powered fuel or empty rack spaces.

1.7 Fire Propagation

The staff has not performed a sufficient amount of research to fully understand and predict the propagation of zirconium fires in a spent fuel pool. Based on the limited amount of work performed to date, the propagation is probably limited to less than 2 full cores at a time of 1 year after shutdown. This estimate is based on lowering the GI 82 estimate of the 6KW/MTU fire threshold to 3KW/MTU to account for building ventilation effects. The actual propagation

will probably be dependent on the actual fuel loading configuration in the spent fuel pool. A long term experimental and analytical research program would be required to reliably predict the propagation of a zirconium fire in a spent fuel pool.

1.8 Guidelines for Spent Fuel Pool Heatup Analysis

Licensees must use an appropriate evaluation model for any site specific spent fuel pool heatup calculations. An evaluation model includes one or more computer programs and other information necessary for application of the calculation framework to a specific transient or accident, such as mathematical models used, assumptions included in the programs, a procedure for treating the program input and output information, specification of those portions of the analysis not included in the computer programs, values of parameters and other information necessary to specify the calculation procedure.

The code(s) should be validated and documentation of the modeling, verification, validation and use of the computer programs should be maintained to document the adequacy of the computer program. Finally, the code should be developed and maintained under a Quality Assurance program that meets the requirements of 10 CFR Part 50, Appendix B.

Depending on the margins available, sensitivity or uncertainty analysis should be performed (and documented) to confirm that the combined code and application uncertainty is less than the design margin for the safety parameter of interest in the calculation.

Spent fuel pool heatup analyses should consider decay heat removal from both the fuel racks and the building. An accurate determination of fuel cladding temperatures in the spent fuel pool requires fluid flow and heat transfer analyses. The primary components of a heatup anlaysis are described in the paragraphs that follow.

The spent fuel pool heat source is determined by the decay heat in the spent fuel. The analysis should use methods that are appropriate for the fuel burnup and decay time. The lowest possible decay heat input can only be achieved by accurately tracking the burnup history of individual spent fuel pool bundles. The method for calulating the spent fuel pool decay heat including its uncertainty should be justified.

The fluid conditions immediately above the spent fuel racks are determined by the heat removal from the spent fuel racks to the outside of the building. This is primarily determined by the building ventilation flow rate. Heat transfer through the walls can also be important at low ventilation rates. Heat removal from the top of the fuel racks to the bulk building atmosphere is primarily determined by buoyancy driven flows. Radiation heat transfer can also be significant. A steady state solution may not exist for the problem being analyzed. Time dependent variations must be considered in the analysis if time averaging is used in order to use a steady state approximation. Spatial variations must also be considered if spatial averaging is performed to simplify the analysis. The choice of a turbulence model must be justified and its impact on the overall calculation uncertainty must be evaluated.

Heat removal from the spent fuel pool racks is governed by the fluid conditions immediately above the fuel racks and buoyancy driven natural circulation in the racks. The heat removal rates are determined by the balance between buoyancy driving forces and the flow resistance of the downflow area and the fuel racks. Downflow in low powered spent fuel bundles should be considered and accounted for. This can be very important in densely packed spent fuel

pools with little downcomer area available for downflow. Calculations should use wall friction factors and additive loss coefficients (including those due to orifices and grid spacers) that are appropriate for both the flow regime and the geometry.

The staff's experience suggests conduction, convection and radiation heat transfer can all be important in spent fuel pool rack heatup calculations. Neglect of any heat transfer mode should be justified. Convective heat transfer coefficients should be appropriate for both the flow regime and the geometry.

Certain phenomena will occur as peak temperatures increase and should be considered for in the analysis. Experimental data has shown that clad ballooning will occur if cladding temperatures exceed temperatures of approximately 560 °C for longer than 10 hours. The temperature threshold will be lower for longer thermal loading times. If clad ballooning is expected additional flow losses may occur. Many spent fuel pool racks use BORAL plates for criticality control. Aluminum melts at approximately 640 °C. Heat transfer calculations within the rack should predict the temperature of any aluminum in the rack. If the temperature of any aluminum in the racks is predicted to exceed its melting temperature the consequences of the melting and relocation must be analyzed. Possible consequences of aluminum melting and relocation include flow blockages and criticality. Zirconium oxidation in air can have a significant effect on heatup calculations at temperatures above 600 °C. Zirconium oxidation must be modeled using and appropriate reaction kinetics model that is supported by experimental data.

The licensee must integrate all pieces of the analysis to determine if runaway zirconium oxidation will occur. The impact of uncertainties on the predicted temperatures must be evaluated and compared to the margin available in the calculation. The propagation of uncertainties through each part of the analysis must be properly treated.

References:

1. Benjamin, et. al., "Spent Fuel Heatup Following Loss of Water During Storage", NUREG/CR-0649, March 1979.
2. Nourbakhsh, et. al., "Analysis of Spent Fuel Heatup Following Loss of Water in a Spent Fuel Pool", NUREG/CR-6441.
3. Smith, C. W., "Calculated Fuel Perforation Temperatures, Commercial Power Reactor Fuels", NEDO-10093, September 1969.
4. Sailor, et. al., "Severe Accidents in Spent Fuel Pools in Support of Generic Issue 82", NUREG/CR-4982.
5. MELCOR 1.8.1Computer Code Manual, Volume 2: Reference Manuals and Programmers' Guides, June 1991.
6. Pisano, et. al., "The Potential for Propagation of a Self-Sustaining Zirconium Oxidation Following Loss of Water in a Spent Fuel Pool", NRC draft report, January 1984.
7. "A Safety and Regulatory Assessment of Generic BWR and PWR Permanently Shutdown Nuclear Power Plants," NUREG/CR-6451, dated August 1997.
8. Hermann, et.al., "Technical Support for a Proposed Decay Heat Guide Using SAS2H/ORIGEN-S Data", NUREG/CR-5625, September 1994.
9. "Compendium of ECCS Research for Realistic LOCA Analysis", NUREG-1230, December 1988.

10. Cooper, T. D., "Review of Zirconium-Zircaloy Pyrophoricity, RHO-RE-ST-31P, Rockwell International, November 1984.
11. Kullen, et. al., " An Assessment of Zirconium Pyrophoricity and Recommendations for Handling Wast Hulls", ANL-77-63, Argonne National Laboratory, November 1977.

September 5, 2000 (1:54PM)

Appendix 2.0 Assessment of Spent Fuel Pool Risk at Decommissioning Plants

Introduction

As the number of decommissioning plants increases, the ability to address generic regulatory issues has become more important. After a nuclear power plant is permanently shut down and the reactor is defueled, most of the accident sequences that normally dominate operating reactor risk are no longer applicable. The predominant source of risk remaining at permanently shut down plants involves accidents associated with spent fuel stored in the spent fuel pool. Previously, requests for relief from regulatory requirements that are less safety significant for decommissioning plants than operating reactors were decided on a plant-specific basis. This is not the best use of resources and led to differing requirements among decommissioning plants. The NRC Commission urged its staff to develop a risk-informed basis for making decisions on exemption requests and to develop a technical basis for rulemaking for decommissioning reactors in the areas of emergency preparedness, indemnification, and security. This report is one part of that basis.

The staff's assessment found that the frequency of spent fuel uncovery leading to a zirconium fire at decommissioning spent fuel pools is less than $5x10^{-6}$ per year (using the Lawrence Livermore National Laboratory (LLNL) seismic hazard estimates [ref. NUREG-1488, "Revised Livermore Seismic Hazard Estimates for 69 Nuclear Power Plant Sites East of the Rocky Mountains," P. Sobel, October 1993.] for nuclear power plant sites) when a utility follows certain industry commitments and certain of our recommendations. The estimate drops to less than $1x10^{-6}$ per year if the EPRI site-specific seismic hazard estimates are used. These frequencies are made up of contributors from a detailed risk assessment of initiators ($3.4x10^{-7}$ per year), both internal and external, and a quasi-probabilistic contribution from seismic events ($<5x10^{-6}$ per year using the LLNL hazard estimates or $<6x10^{-7}$ per year using the EPRI hazard estimates [ref. **XX**]) that have ground motions many times larger than individual site design basis earthquake ground motions (and higher uncertainty). It was also determined that if these commitments and recommendations are ignored, the estimated frequency of a zirconium fire could be significantly higher. Section 4 of this report discusses the steps necessary to assure that a decommissioning plant operates within the bounds assumed in the risk assessment.

Previous NRC-sponsored studies have evaluated some severe accident scenarios for spent fuel pools at operating reactors that involved draining the spent fuel pool of its coolant and shielding water. Because of the significant configuration and staffing differences between operating and decommissioning plants, the staff performed this assessment to examine the risk associated with decommissioning reactor spent fuel pools.

First, the staff examined whether or not it was possible from a deterministic view point for a zirconium cladding fire to occur. Zirconium fires were chosen as the key factor because radionuclides require an energetic source to transport them off-site if they are to have a significant health effect on local (first few miles outside the exclusion area) and more distant populations. Deterministic evaluations in the staff's preliminary draft risk assessment indicated that zirconium cladding fires could not be ruled out for loss of spent fuel pool cooling for fuel that has been shut down and removed from an operating reactor within approximately five years. The consequence analysis indicated that zirconium cladding fires could give off-site doses that the NRC would consider unacceptable. To assess the risk during the period of vulnerability to zirconium cladding fires, the staff initially performed a broad preliminary risk

assessment, which modeled many internal and external initiating events. The preliminary risk assessment was made publicly available early in the process (June 1999) so that the public and the nuclear industry could track the NRCs evaluation and provide comments. In addition, the preliminary risk assessment was subjected to a technical review and requantification by the Idaho National Engineering and Environmental Laboratory (INEEL). The NRC continued to refine its estimates, putting particular emphasis on improving the human reliability assessment (HRA), which is central to the analysis given the long periods required for lowering the water in the spent fuel pool for most initiators. The staff identified those characteristics that a decommissioning plant and its utility should have to assure that the risks driven by fuel handler error and institutional mistakes are maintained at an acceptable level. In conjunction with the staff's HRA effort and ongoing reassessment of risk, the nuclear industry through NEI developed a list of commitments (NEI letter dated November 12, 1999) that provide boundaries within which the risk assessment's assumptions have been refined. The staff released a draft risk assessment in February 2000, which updated the June 1999 preliminary report. The final risk assessment reflects the commitments made by industry, the additional requirements we have developed to ensure the assumptions in the assessment remain valid, the technical review by INEEL, the staff's ongoing efforts to improve the assessment, and input from stakeholders. The report provides a technical basis for determining the acceptability of exemption requests and future rulemaking on decommissioning plant risk.

The staff looked at the broad aspects of the issue. A wide range of initiators (internal and external events including loss of inventory events, fires, seismic, aircraft, and tornadoes) was considered. The staff modeled a decommissioning plant's spent fuel pool cooling system based on the sled-mounted systems that are used at many current decommissioning plants. One representative spent fuel pool configuration (See Appendix 2a, Figure 2.1) was chosen for the evaluation except for seismic events, where the PWR and BWR spent fuel pool designs (i.e., the difference in location of the pools in PWRs and BWRs) were specifically considered. Information about existing decommissioning plants was gathered from decommissioning plant project managers and during visits to four sites covering all four major nuclear steam supply system vendors (General Electric, Westinghouse, Babcock & Wilcox, and Combustion Engineering). Plant visits gathered information on the as-operated, as-modified spent fuel pools, their cooling systems, and other support systems.

From the perspective of off-site consequences, the staff focused on the zirconium fire end state, because there has to be an energetic source (e.g., a large high temperature fire) to transport the fission products off-site in order to have potentially significant off-site consequences. The staff chose the timing of when the spent fuel pool inventory is drained to within three feet of the top of the spent fuel as a surrogate for onset of the zirconium fire because once the fuel is uncovered, the dose rates at the edge of the pool would be in the tens of thousands of rem per hour, because it is unclear whether hydrides could cause ignition at lower cladding temperatures than previously predicted, because of the differences in configurations, and because there was great difficulty in modeling the heat transfer rate as the fuel was uncovered. In addition, from the point of view of estimation of human error rates, since for initiating events (other than seismic and heavy load drop) would take many days to uncover the top of the fuel, it was considered of small numerical benefit (and significant analytical effort) if the potential additional two days until the zirconium fire began were added to the timing.

After the preliminary draft risk assessment was released in June 1999, the staff sent the assessment to INEEL for review and held public meetings and a workshop to assure that

models appropriately accounted for the way decommissioning plants operate today and to help determine if some of the assumptions we made in the preliminary draft risk assessment needed improvement. Following a workshop, NEI provided a list of general commitments (See Appendix **XX**) that proved instrumental in refining the assumptions and models in the draft final risk assessment. Working with several PRA experts, the staff subsequently developed improved HRA estimates for events that lasted for extended periods.

This appendix describes how the risk assessment was performed for beyond design bases internal event accident sequences (i.e., sequences of equipment failures or operator errors that could lead to a zirconium cladding fire and release of radionuclides off-site). Event trees and fault trees were developed that model the initiating events and system or component failures that lead to fuel uncovery (these trees are provided in Appendix 2a).

September 5, 2000 (1:54PM)

Appendix 2a Detailed Assessment of Risk from Decommissioning Plant Spent Fuel Pools

1.0 Introduction

In reference 1, the NRC performed a preliminary study of spent fuel pool risk at decommissioning plants to: examine the full scope of potentially risk-significant issues; identify credible accident scenarios; document the assessment for public review; and to elicit feedback from all stakeholders regarding analysis assumptions and design and operational features expected at decommissioning plants. In the February 2000 draft risk assessment, the staff updated the June 1999 preliminary draft risk assessment to include industry commitments. In this current analysis, the February 2000 draft was updated based on:

- stakeholder feedback
- Additional thermal-hydraulic calculations

This updated PRA addresses the following initiating events:

- loss of spent fuel pool cooling
- fire leading to loss of spent fuel pool cooling
- loss of off-site power due to plant centered and grid related causes
- loss of off-site power due to severe weather
- non-catastrophic loss of spent fuel pool inventory

External events such as earthquakes, aircraft crashes, heavy load drops, and tornado strikes that could lead to catastrophic pool failure are dealt with elsewhere in this report. The analysis is based on the following input. The assumed system configuration is typical of the sled-mounted systems that are used at many current decommissioned plants. Information about existing decommissioned plants was gathered from project managers (NRC Staff) of decommissioning plants, and during visits to four sites covering all four major nuclear steam supply system vendors (General Electric, Westinghouse, Babcock & Wilcox, and Combustion Engineering). The assumptions made about the operation of the facility are based in part on a set of commitments made by NEI (Ref. 2), supplemented by an interpretation of how some of those commitments might be applied.

2.0 System Description

Figure 2.1 is a simplified drawing of the system assumed for the development of the model. The spent fuel pool cooling (SFPC) system is located in the SFP area and consists of

Figure 2.1 Simplified Diagram of Spent Fuel Pool Cooling and Inventory Make-up Systems

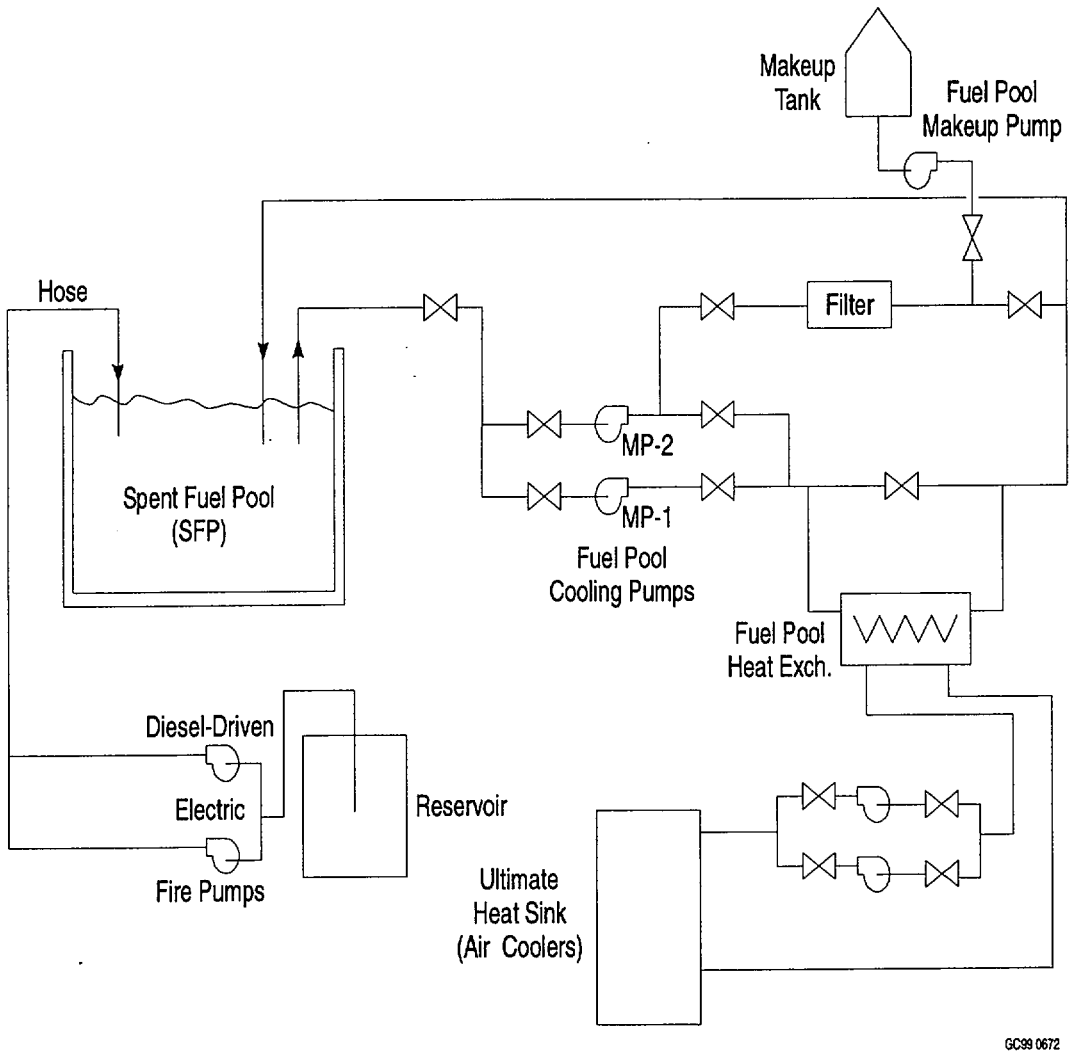

motor-driven pumps, a heat exchanger, an ultimate heat sink, a make-up tank, filtration system and isolation valves. Suction is taken via one of the two pumps on the primary side from the spent fuel pool and is passed through the heat exchanger and returned back to the pool. One of the two pumps on the secondary side rejects the heat to the ultimate heat sink. A small amount of water is diverted to the filtration process and is returned to the discharge line. A regular make-up system supplements the small losses due to evaporation. In the case of prolonged loss of SFPC system or loss of inventory events, the inventory in the pool can be made up using the firewater system. There are two firewater pumps, one motor-driven (electric) and the other diesel-driven, which provide firewater throughout the plant. A firewater hose station is provided in the SFP area. The firewater pumps are assumed to be located in a separate structure.

3.0 Methodology

3.1 Logic Model

This section summarizes the spent fuel pool PRA model developed in this study. The description of the modeling approach and key assumptions is intended to provide a basis for interpreting the results in Sections 4 and 5. The event trees and fault trees presented in this report are meant to be generic enough to apply to many different configurations. The fault trees are documented in Attachment A to this appendix. An example of the HRA worksheet used for this analysis is presented in Attachment B.

The endstate for this analysis is defined as loss of coolant inventory to the point of fuel uncovery from either leakage or boil-off. Dose calculations (Ref. 3) show that when there is less than 3 feet of water above the top of the fuel, an environment that is rapidly lethal to anyone at the edge of the pool can result. Therefore, 3 feet has been adopted as an effective limit for recovery purposes. In other words, the endstate for this analysis is effectively defined as loss of coolant inventory to a point 3 feet above the top of the fuel. One of the NEI commitments is that there should be a provision for remote alignment of the make-up source to the pool, which would make this assumption conservative. However, the impact of this conservatism on the conclusions of this analysis is minor.

The event tree and fault tree models were developed and quantified using Version 6 of the SAPHIRE software package (Ref. 4), using a fault tree linking approach. Event trees were developed for each of the initiators identified in Section 1.

3.2 HRA Methodology

3.2.1 Introduction

One of the key issues in performing a probabilistic risk assessment (PRA) for the spent fuel pool during the decommissioning phase of a nuclear power plant's life cycle is how much credit can be given to the operating staff to respond to an incident that impacts the spent fuel pool that would, if not attended to, lead to a loss of cooling of the spent fuel and eventually to a zirconium fire.

The objective of the HRA analysis in this PRA is to assess whether the design features and operational practices assumed can be argued to suggest that the non-response probabilities

should be low. The design features include the physical plant characteristics (e.g., nature and number of alarms, available mitigation equipment) and the operational practices include operational and management practices (including crew structure and individual responsibilities), procedures, contingency plans, and training. Since the details will vary from plant to plant, the focus is on general design features and operational practices that can support low non-response probabilities.

Section 3.2.2 discusses the differences between the full power and decommissioning modes of operation as they impact human reliability analysis, and the issues that need to be addressed in the analysis of the decommissioning mode are identified. Section 3.2.3 discusses the factors that recent studies have shown to be significant in establishing adequacy of human performance.

3.2.2 Analysis Approach

The HRA approaches that have been developed over the past few years have primarily been for use in PRAs of nuclear power plants at full power. Methods have been developed for assessing the likelihood of errors associated with routine processes such as restoration of systems to operation following maintenance, and those errors in responding to plant transients or accidents from full power. For spent fuel pool operation during the decommissioning phase, there are unique conditions not typical of those found during full-power operation. Thus the human reliability methods developed for full power operation PRAs, and their associated error probabilities, are not directly applicable. However, some of the methods can be adapted to provide insights into the likelihood of failures in operator performance for the spent fuel pool analysis by accommodating the differences in conditions that might impact operating crew performance in the full power and decommissioning phases. There are both positive and negative aspects of the difference in conditions with respect to the reliability of human performance.

Examples of the positive aspects are:

- For most scenarios, the time-scale for changes to plant condition to become significant are protracted. This is in contrast to full power transients or accidents in which response is required in a relatively short time, ranging from a few minutes to a few hours. In the staff's analysis, times ranging from 100 to greater than 220 hours were estimated for heat up and boil off following loss of spent fuel pool cooling. Thus, there are many opportunities for different plant personnel to recognize off-normal conditions, and a long time to take corrective action, such as making repairs, hooking up alternate cooling or inventory make-up systems, or even bringing in help from off-site.

- There is only one function to be maintained, namely decay heat removal, and the systems available to perform this function are relatively simple. By contrast, in the full power case there are several functions that have to be maintained, including criticality, pressure control, heat removal, containment integrity.

- With respect to the last point, it is also expected that the number of controls and indications that are required in the control room are considerably fewer than for an operating plant, and therefore, there is less cause for confusion or distraction.

Examples of the negative aspects are:

- The plant operation is not as constrained by regulatory tools (technical specifications are not as comprehensive and restrictive as they are for operating plants), and there is no requirement for emergency procedures.

- Because the back-up systems are not automatically initiated, operator action is essential to successfully respond to failures of the cooling function.

- There is expected to be little or no redundancy in the on-site mitigating capability as compared with the operating plant mode of operation. (In the staff's initial evaluation, because little redundant on-site equipment was assumed to be available, the failure to bring on off-site equipment was one of the most important contributors.) This implies that repair of failed functions is relatively more significant in the risk analysis for the spent fuel pool case.

In choosing an approach for developing the estimates documented in this report, the following issues were considered to be important:

- Due to the long time scales, it is essential to address the potential for recovery of failures on the part of one crew or individual by other plant staff, including subsequent shifts.

- Potential sources of dependency that could lead to a failure of the organization as a whole to respond adequately should be taken into account.

- The approach should be consistent with current understanding of human performance issues (see for example, Refs. 5, 6, and 7).

- Those factors that the industry has suggested that will help ensure adequate response (instrumentation, monitoring strategies, procedures, contingency plans) should be addressed (Ref. 2).

- Where possible, any evaluations of human error probabilities (HEPs) should be calibrated against currently acceptable ranges for HEPs.

- The reasoning behind the assumptions made should be transparent.

3.2.3 Human Performance Issues

In order to be successful in coping with an incident at the facility, there are three basic functions that are required of the operating staff, and these are either explicit (awareness) or implicit (situation assessment and response planning and response implementation) in the definitions of the human failure events in the PRA model.

- Plant personnel must be able to detect and recognize when the spent fuel cooling function is deteriorating or pool inventory is being lost (Awareness).
- Plant personnel must be able to interpret the indications (identify the source of

the problem) and formulate a plan that would mitigate the situation (Situation Assessment and Response Planning).

- Plant personnel must be able to perform the actions required to maintain cooling of and/or add water to the spent fuel pool (Response Implementation).

In the following sections, factors that are relevant to determining effective operator responses are discussed. While not minimizing the importance of such factors as the establishment of a safety culture and effective intra-crew communication, the focus is on factors which can be determined to be present on a relatively objective basis. A review of LERs associated with human performance problems involved in response to loss of fuel pool cooling revealed a variety of contributing factors, including crew inexperience, poor communication, and inadequate administrative controls. In addition, there were some instances of design peculiarities that made operator response more complex than necessary.

The factors discussed below were used to identify additional assumptions made in the analysis that the staff considered would provide for an effective implementation of the NEI commitments.

3.2.3.1 Awareness/Detection of Deviant Conditions

There are two types of monitoring that can be expected to be used in alerting the plant staff to deviant conditions: a) passive monitoring in which alarms and annunciators are used to alert operators; b) active monitoring in which operators, on a routine basis, make observations to detect off-normal behavior. In practice both would probably be used to some extent. The amount of credit that can be assumed depends on the detailed design and application of the monitoring scheme.

In assessing the effectiveness of alarms there are several factors that could be taken into account, for example:

- alarms (including control room indications) are maintained and checked/calibrated on a regular basis
- the instruments that activate instruments and alarms measure, as directly as possible, the parameters they purport to measure
- alarm set-point is not too sensitive, so that there are few false alarms
- alarms cannot be permanently canceled without taking action to clear the signal
- alarms have multiple set-points corresponding to increasing degradation
- the importance of responding to the alarms is stressed in plant operating procedures and training
- the existence of independent alarms that measure different primary parameters (e.g., level, temperature, airborne radiation), or provide indirect evidence (sump pump alarms, secondary side cooling system trouble alarms)

The first and last of these factors may be reflected in the reliability assumed for the alarm and in the structure of the logic model (fault tree) for the event tree function control room alarms (CRA), respectively. The other factors may be taken into account in assessing the reliability of the operator response.

For active monitoring, examples of the factors used in assessing the effectiveness of the monitoring include:

- scheduled walk-downs required within areas of concern, with specific items to check (particularly to look for indications not annunciated in, or monitored from, the control room, for example, indications of leakage, operation of sump pumps if not monitored, steaming over the pool, humidity level)
- plant operating procedures that require the active measurement of parameters (e.g., temperature, level) rather than simply observing the condition of the pool
- requirement to log, check, and trend results of monitoring
- alert levels specified and noted on measurement devices

These factors can all be regarded as performance shaping factors (PSFs) that affect the reliability of the operators.

An important factor that should mitigate against not noticing a deteriorating condition is the time scale of development, which allows the opportunity for several shifts to notice the problem. The requirement for a formal shift turnover meeting should be considered.

3.2.3.2 Situation Assessment and Response Planning

The principal operator aids for situation assessment and response planning are procedures and training in their use.

The types of procedures that might be available are:

- annunciator/alarm response procedure that is explicit in pointing towards potential problems
- detailed procedures for use of alternate systems indicating primary and back-up sources, recovery of power, etc.

The response procedures may have features that enhance the likelihood of success, for example:

- inclusion of guidance for early action to establish contingency plans (e.g., alerting off-site agencies such as fire brigades) in parallel with a primary response such as carrying out repairs or lining up an on-site alternate system.
- clearly and unambiguously written, with an understanding of a variety of different scenarios and their timing.

In addition:

- training for plant staff to provide an awareness of the time scales of heat up to boiling and fuel uncovery as a function of the age of the fuel would enhance the likelihood of successful response.

3.2.3.3 Response Implementation

Successful implementation of planned responses may be influenced by several factors, for example:

- accessibility/availability of equipment
- staffing levels that are adequate for conducting each task and any parallel contingency plans, or plans to bring in additional staff
- training
- timely feedback on corrective action

3.2.4 Quantification Method

Three HRA quantification methods were applied, and each is briefly described below.

- The Technique for Human Error Prediction (THERP, Ref. 8). This method was used to quantify the initial recognition of the problem. Specifically, the annunciator response model (Table 20-23) was used for response to alarms. The THERP approach was also used to assess the likelihood of failure to detect a deviant condition during a walk-down, and also the failure to respond to a fire. While this method was developed over twenty years ago, it is still regarded as an appropriate method for the types of HEPs for which it is being used in this analysis.

- The Exponential Repair Model (while not strictly a human reliability model) was applied to calculate the probability of failure associated with the repair of systems and components in this analysis. This method is described in the main body of the report. In cases where dependency exists with prior repair tasks, the dependency model used in THERP was used to assess the impact of that dependency.

- The Simplified Plant Analysis Risk Human Error Analysis Method (SPAR HRA, Ref. 9) was employed for all other HEPs. This model was chosen because it includes an appropriate level of detail in terms of performance shaping factors and error modes (cognition and execution) given the lack of detailed knowledge about expected plant practices and designs. The PSFs used in the model allowed the impact of the NEI commitments and additional staff assumptions to be incorporated explicitly into the evaluation.

3.3 Other Inputs to the Risk Model

A variety of other inputs were required for this PRA, including generic configuration data used in the fault tree models, radiological calculations, and timing calculations. Initiating event frequencies and generic reliability data were derived from other studies sponsored by the NRC. The times available for operator actions are based on calculations of the time it would take for bulk boiling to begin in the pool, or on the time it takes for the level in the pool to fall to the level of the fuel pool cooling system suction, or to a height of approximately 3 ft above the fuel, as appropriate to the definition of the corresponding human failure event.

It takes a relatively long time to uncover the fuel if the initiating event does not involve a catastrophic failure of the pool. This is due to the large amount of water in a spent fuel pool, the large specific heat of water, and the large latent heat of vaporization for water. Calculations that were used in the June 1999 and February 2000 reports for a typical-sized spent fuel pool yield the results in Table 3.1. Subsequently the staff determined that it had made a mistake in the assumed heat load on the generic spent fuel pool. Current estimates of time to bulk boiling are actually about twice those given in Table 3.1 below. The staff debated whether to redo the human reliability analysis estimates assuming the longer periods. It was determined that the credit given for fuel handler recovery was already so great that it would be difficult to estimate the numerical benefit of the additional time. Rather, it can be inferred that the uncertainties of whether the absolute value of the recovery estimates are really so large have been reduced. In addition, the numerical estimates for the sequences that are affected by these longer recovery times are already so low that they contribute very little to the overall risk estimates, which are dominated by seismic events, heavy load drop, and loss of off-site power due to extreme weather that are not as strongly affected by fuel handler error.

The bulk boiling and boil-off results are based on the following assumptions:

- no heat losses
- atmospheric pressure
- Heat of vaporization $h_{fg} \approx 2258$ kJ/kg
- base pool heat load for a full pool of 2 MW
- core thermal power of 3293 MW
- typical pool size (based on Tables 2.1 and 2.2 of NUREG/CR-4982, Ref. 10)
    - typical BWR pool is 40' deep by 26' by 39'
    - typical PWR pool is 43' deep by 22' by 40'

Table 3.1 Time to Bulk Boiling, and Boil-off Rates

Time after discharge (days)	Decay power from last core (MW)	Total heat load (MW)	Time to bulk boiling (hr)	Boil-off rate (gpm)	Level decrease (ft/hr)[1]
2	16.4	18.4	5.6	130	1.0
10	8.6	10.6	9.8	74	0.6
30	5.5	7.5	14	52	0.42
60	3.8	5.8	18	41	0.33
90	3.0	5.0	21	35	0.28
180	1.9	3.9	27	27	0.22
365	1.1	3.1	33	22	0.18 ≈ 0.2

Notes: (1) using typical pool sizes, it is estimated that for BWRs, we have 1040 ft^3/ft depth, and for PWRs, we have 957 ft^3/ft depth. Assume ≈ 1000 ft^3/ft depth for level decreases resulting from boil-off.

In a SFP, the depth of water above the fuel is typically 23 to 25 feet. Subtracting 3 feet to account for shielding requirements, it is estimated that approximately 20 feet of water will have to boil-off before the start of fuel uncovery. Therefore, using the above table, the available time for operator actions for the loss of cooling type accidents is estimated as follows:

For one-year-old fuel, the total time available equals the time to bulk boiling plus the time to boildown to 3 ft above the top of the fuel. Therefore, the total time available for operator action is as follows:

Total Time = 33 hr + (20 ft)/(0.2 ft/hr)
= 133 hours

It is assumed that the operator will not use alternate systems (e.g., firewater) until after bulk boiling begins and the level drops to below the suction of the cooling system. It is assumed that the suction of the cooling system is 2 ft below the nominal pool level. Therefore, if bulk boiling begins at 33 hours, and the boil-off rate is 0.2 ft/hr, then the total time available to provide make-up using the firewater system to prevent fuel uncovery is as follows:

133 hrs -(Time to Bulk Boiling + Time for Boil-off) = $133 - (33hrs + \frac{2ft}{0.2ft/hr}) = 133 - 43hrs$ = 90hrs

3.4 General Assumptions

This analysis is based on the assumption that the commitments for procedures and equipment proposed by NEI in their November 12, 1999 letter to Richard J. Barrett (Ref. 2) are adopted. These are reproduced below:

1. Cask drop analyses will be performed or single failure proof cranes will be in use for handling of heavy loads, (i.e., phase II of NUREG 0612 (Ref. 11) will be implemented).

2. Procedures and training of personnel will be in place to ensure that on-site and off-site resources can be brought to bear during an event.

3. Procedures will be in place to establish communication between on-site and off-site organizations during severe weather and seismic events.

4. An off-site resource plan will be developed which will include access to portable pumps and emergency power to supplement on-site resources. The plan would principally identify organizations or suppliers where off-site resources could be obtained in a timely manner.

5. Spent fuel pool instrumentation will include readouts and alarms in the control room (or where personnel are stationed) for spent fuel pool temperature, water level, and area radiation levels.

6. Spent fuel pool boundary seals that could cause leakage leading to fuel uncovery in the event of seal failure shall be self limiting to leakage or otherwise engineered so that drainage cannot occur.

7. Procedures or administrative controls to reduce the likelihood of rapid drain down events will include (1) prohibitions on the use of pumps that lack adequate siphon protection; or (2) controls for pump suction and discharge points. The functionality of anti-siphon devices will be periodically verified.

8. An on-site restoration plan will be in place to provide for repair of the spent fuel pool cooling systems or to provide access for make-up water to the spent fuel pool. The plan will provide for remote alignment of the make-up source to the spent fuel pool without requiring entry to the refuel floor.

9. Procedures will be in place to control spent fuel pool operations that have the potential to rapidly decrease spent fuel pool inventory. These administrative controls may require additional operations or administrative limitations such as restrictions on heavy load movements.

10. Routine testing of the alternative fuel pool make-up system components will be performed and administrative controls for equipment out of service will be implemented to provide added assurance that the components would be available if needed.

Since the commitments are stated at a relatively high level, additional assumptions have been made as detailed below.

- It is assumed that the operators (through procedures and training) are aware of the available backup sources that can be used to replenish the SFP inventory (i.e., the fire protection pumps, or off-site sources such as from fire engines). Arrangements have been made in advance with fire stations including what is required from the fire department including equipment and tasks.

- The site has two operable firewater pumps, one diesel-driven and one electrically driven from off-site power.

- The make-up capability (with respect to volumetric flow) is assumed as follows:

Make-up pump:	20 - 30 gpm
Firewater pump:	100 - 200 gpm
Fire engine:	100 - 250 gpm [depending on hose size: 1-½" (100 gpm) or 2-½" (250 gpm)]

- It is therefore assumed that, for the larger loss of coolant inventory accidents, make-up through the make-up pumps is not feasible unless the source of inventory loss can be isolated.

- The operators perform walk-downs of the SFP area once per shift (8- to 12-hour shifts). A different crew member is assumed for the next shift. It is also assumed that the SFP water is clear and pool level is observable via a measuring stick in the pool that can alert operators to level changes.

- Requirements for fire detection and suppression may be reduced (when compared to those for an operating plant) and it is assumed that automatic detection and suppression capability may not be present.

- All equipment, including external sources (fire department), are available and in good working order.

- The emergency diesel generators and support systems such as residual heat removal and service water (that could provide SFP cooling or make-up prior to the plant being decommissioned) have been removed from service.

- The SFP cooling system, its support systems, and the electric driven fire protection pump are fed off the same electrical bus.

- Procedures exist to mitigate small leaks from the SFP or for loss of the SFP cooling system.

- The only significant technical specification applicable to SFPs is the requirement for radiation monitors to be operable when fuel is being moved. There are no technical specifications requirements for the cooling pumps, make-up pumps, firewater pumps, or any of the support systems.

- There are multiple sources of water for make-up via the firewater pumps or fire engine.

- Generic industry data were used for initiating event frequencies for the loss of off-site power, the loss of pool cooling, and the loss of coolant inventory.

- Instrumentation that measures spent fuel pool temperature and level measures these parameters directly.

- For the purposes of timing, the transfer of the last fuel from the reactor to the SFP is assumed to have occurred one year previously.

4.0 Model Development

This section describes the risk models that were developed to assess the likelihood of fuel uncovery from spent fuel pool loss of cooling events, fire events, loss of off-site power, and loss of inventory events.

4.1 Loss of Cooling Event Tree

This event tree (Figure 4.1) models generic loss of cooling events (i.e., those not related to other causes such as fire or loss of power, which are modeled in later sections). The top events and the supporting functional fault trees are discussed in the following sections.

4.1.1 Initiating Event LOC – Loss of Cooling

4.1.1.1 Event Description

This initiating event includes conditions arising from loss of coolant system flow due to the failure of the operating pumps or valves, from piping failures, from an ineffective heat sink (e.g., loss of heat exchangers), or from a local loss of power (e.g., failure of electrical connections).

4.1.1.2 Quantification

This initiating event is modeled by a single basic event, IE-LOC. An initiation frequency of 3.0E-3/yr is taken from NUREG-1275 Volume 12 (Ref. 12). This represents the frequency of loss of cooling events in which temperatures rise more than 20°F.

4.1.2 Top Event CRA – Control Room Alarms

4.1.2.1 Event Description and Timing

This event represents a failure to respond to conditions in the pool that are sufficient to trigger an alarm. Failure could be due to operator error (failure to respond), or loss of indication due to equipment faults. Success for this event is defined as the operator recognizing the alarm and understanding the need to investigate its cause. This event is quantified by fault tree LOC-CRA and includes hardware and human failures basic events that represent failure of control room instrumentation to alarm given that SFP cooling has been lost, and the operators fail to respond to the alarm, respectively.

4.1.2.2 Relevant Assumptions

- Within 8 to 12 hours of the loss of cooling, one or more alarms or indications will reflect an out-of-tolerance condition to the operators in the control room (there may be level indication available locally or remotely, but any change in level is not likely to be significant until later in the sequence of events).
- The SFP has at least one water temperature measuring device, with an alarm and a readout in the control room (NEI commitment no. 5). There could also be indications or alarms associated with pump flow and pressure, but no credit is taken here.
- The instrumentation is tested on a routine basis and maintained operable.
- Procedures are available to guide the operators in their response to off-normal conditions, and the operators are trained on the use of these procedures (NEI commitment no. 2).

4.1.2.3 Quantification

<u>Human Error Probabilities</u>

The basic event HEP-DIAG-ALARM models operator failure to respond to an indication in the

control room and diagnose a loss of cooling event. Such an alarm would likely be the first indication of trouble, so the operator would not be under any heightened state of alertness. On the other hand, it is not likely that any other signals or alarms for any other conditions would be present to distract the operator. The error rate is taken from THERP (Table 20-23).

Hardware Failure Probabilities

The value used for local faults leading to alarm channel failure (event SPC-LVL-LOP, 2.0E-3) was estimated based on information in reference 12. This event includes failure of instrumentation and local electrical faults.

4.1.2.4 Basic Event Probabilities

Basic Event	Basic Event Probability
HEP-DIAG-ALARM	3.0E-4
SPC-LVL-LOP	2.0E-3

4.1.3 Top Event IND – Other Indications of Loss of Cooling

4.1.3.1 Event Description and Timing

This top event models subsequent operator failures to recognize the loss of cooling during walk-downs over multiple shifts. Indications available to the operators include: temperature readouts in the control room (NEI commitment no. 5), local temperature measurements, and eventually, increasing area temperature and humidity, low water level from boil-off, and local alarms. Success for this event is defined as the operator recognizing the abnormal condition and understanding the need to investigate its cause, leaving sufficient time to attempt to correct the problem before the pool level drops below the spent fuel pool cooling system suction. The event is modeled by fault tree LOC-IND.

4.1.3.2 Relevant Assumptions

- The loss of cooling may not be noticeable during the first two shifts but conditions are assumed to be sufficient to trigger high temperature alarms locally and in the control room.
- Operators perform walk-downs and control room readouts once per shift (every 8 to 12 hours) and document observations in a log.
- Regular test and maintenance is performed on instrumentation (NEI commitment no. 10).
- During walk-downs, level changes in the SFP can be observed on a large, graduated level indicator in the pool.
- Procedures are available to guide the operators on response to off-normal conditions, and the operators are trained on the use of these procedures (NEI commitment no. 2)

September 5, 2000 (1:54PM)

Figure 4.1 Loss of spent fuel pool cooling system event tree

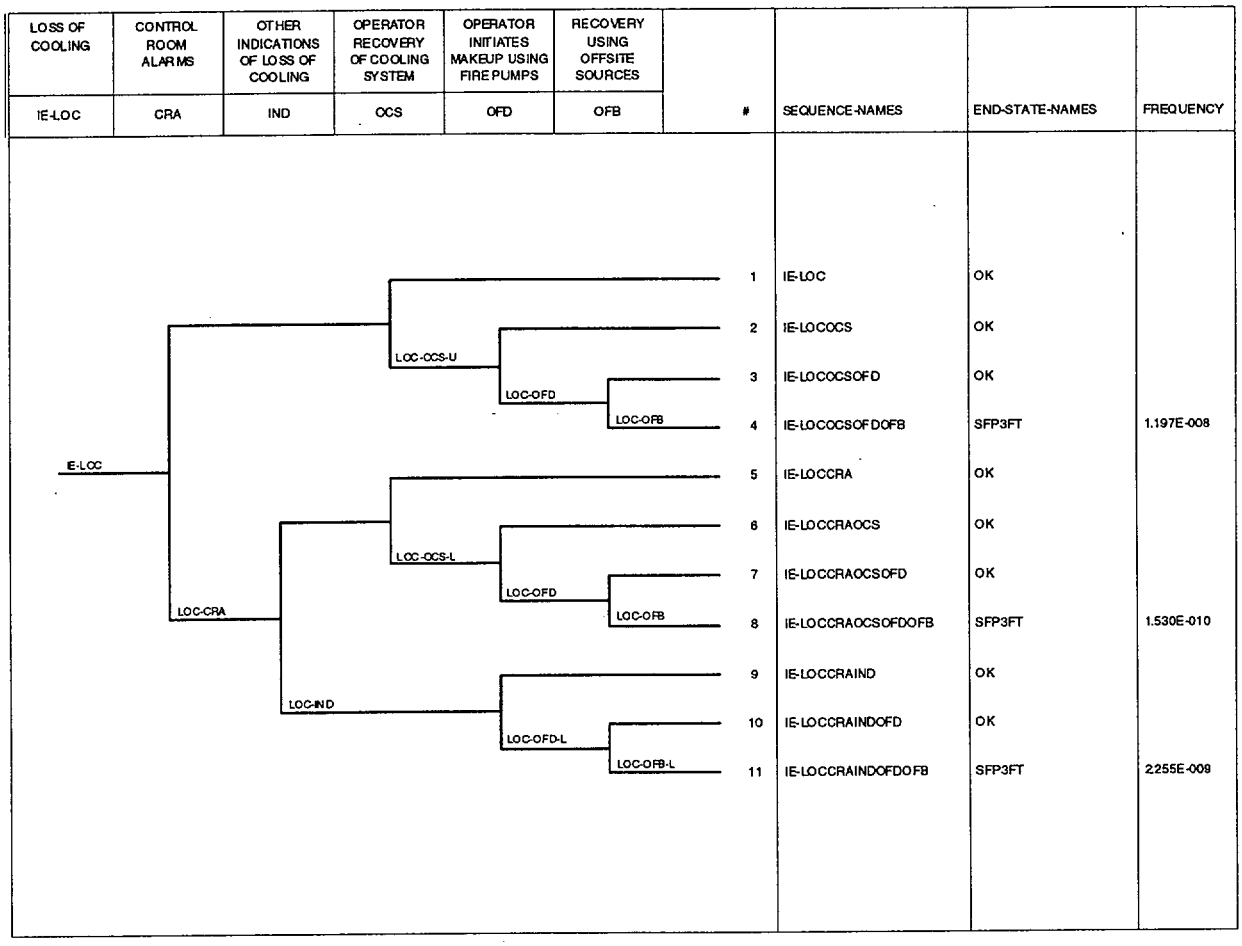

4.1.3.3 Quantification

Human Error Probabilities

The functional fault trees include two human failure events, depending on whether the control room alarms have failed, or whether there was a failure to respond to the initial alarm (it is assumed that the alarm was canceled). If the operator failed to respond to control room alarms, then event HEP-WLKDWN-DEPEN models subsequent operating crews' failures to recognize the loss of cooling during walk-downs, taking into account the dependence on event HEP-DIAG-ALARM. A specific mechanism for dependence can only be identified on a plant and event specific basis, but could result, for example, from an organizational failure that leads to poor adherence to plant procedures. Because this is considered unlikely, and because the conditions in the pool area change significantly over the time scale defined by the success criterion for this event, the degree of dependence is assumed to be low.

If the alarms failed, then event HEP-WLKDWN-LSFPC models subsequent crews' failures to recognize the loss of cooling during walk-downs, with no dependence on previous HEPs. However, because the control room readouts could share a dependency with the alarms, the assumption of local temperature measurements becomes important. The failure probabilities for these events were developed using THERP, and are based upon three individual failures: failure to carry out an inspection, missing a step in a written procedure, and misreading a measuring device. Because there are on the order of 33 - 43 hours before the spent fuel pool cooling system becomes irrecoverable without pool make-up, it is assumed that multiple crews would have to fail. Assuming that the crews are totally independent would give a very low probability. However, a low level of dependence is assumed and the probability is truncated at 1E-05.

4.1.3.4 Basic Event Probabilities

Basic Event	Basic Event Probability
HEP-WLKDWN-LSFPC	1.0E-5
HEP-WLKDWN-DEPEN	5.0E-2

4.1.4 Top Event OCS – Operator Recovery of Cooling System

4.1.4.1 Event Description and Timing

Once the operators recognize loss of spent fuel pool cooling, they will likely focus their attention on recovery of the SFP cooling system. It is assumed that only after bulk boiling begins and the water level drops below the cooling system suction that the operator will inject water from other make-up systems (e.g., firewater). Therefore, the time available to recover the SFP cooling system could be as long as 43 hours, given an immediate response to an alarm. However, it has been assumed that the operating staff has only until shortly after bulk boiling begins (assumed to be 33 hours) to restore the SFP cooling system. This assumption is based on concerns about volume reduction due to cooling and whether the make-up system capacity is sufficient to overcome that volume reduction.

The initial cause of the loss of cooling could be the failure of a running pump in either the primary or the secondary system, in which case the response required is simply to start the

redundant pump. However, it could also be a more significant failure, such as a pipe break or a heat exchanger blockage. To simplify the model, it has been assumed that a repair is necessary. While this is conservative, it does not unduly bias the conclusions of the overall study.

If the loss of cooling was detected via the control room alarms, the staff has the full 33 hours in which to repair the system. Assuming that it takes at least 16 hours before parts and technical help arrive, then the operators have 17 hours (33 hours less 16 hours) to repair the system. Failure to repair the SFPC system event is modeled as HEP-COOL-REP-E. This case is modeled by fault tree LOC-OCS-U.

If the loss of cooling was discovered during walk-downs, it has been conservatively assumed the operator has only 9 hours available (allowing 24 hours before loss of cooling was noticed). Since it is assumed that it takes at least 16 hours before technical help and parts arrive, it is not possible that the SFPC system can be repaired before the bulk boiling would begin. Failure to repair the SFPC system event is modeled as HEP-COOL-REP-L. This case is modeled by fault tree LOC-OCS-L.

4.1.4.2 Relevant Assumptions

- The operators will avoid using raw water (e.g., water not chemically controlled) if possible. Therefore, the operators are assumed to focus solely on restoration of the SFP cooling system in the initial stages of the event.
- If the loss of cooling was detected through shift walk-downs, then 24 hours are (conservatively) assumed to have passed before discovery.
- It takes 16 hours to contact maintenance personnel, diagnose the cause of failure, and get new parts.
- Mean time to repair the SFP cooling system is 10 hours.
- Operating staff has received formal training and there are administrative procedures to guide them in initiating repair (NEI commitment no. 8).
- Repair crew is different than the on-site operators.

4.1.4.3 Quantification

Human Error Probabilities

The probability of failure to repair SFPC system is represented by the exponential repair model:

$$e^{-\lambda t}$$

where

λ = (inverse of mean time to repair)
t = available time

In the case where discovery was from the control room, probability of failure to repair SFPC system event, HEP-COOL-REP-E, would be 0.18 based on 17 hours available to repair.

In the case that the discovery was due to operator walk-down (HEP-COOL-REP-L), it is assumed that there is not enough time available to repair and restart the SFP make-up system in time to prevent bulk boiling, and the event has been assigned a value of 1.0.

4.1.4.4 Basic Event Probabilities

Basic Event	Basic Event Probability
HEP-COOL-REP-E	1.8E-1
HEP-COOL-REP-L	1.0

4.1.5 Top Event OFD – Operator Recovery Using On-site Sources

4.1.5.1 Event Description and Timing

On the two upper branches of the event tree, the operators have recognized the loss of the SFPC system, and have tried unsuccessfully to restore the system. After 43 hours, the level of the pool has dropped below the suction of the SFP cooling system (see below), so that repair of that system will not have any effect until pool level is restored. The operating staff now has 88 hours to provide make-up to the pool using firewater (or other available on-site sources) to prevent fuel uncovery (131 hours less 43 hours). This event represents failure to provide make-up to the SFP. The operators have both an electric and a diesel-driven firewater pump available to perform this function. If both pumps were to fail, there may be time to repair one of the pumps. This event has been modeled by the fault tree LOC-OFD.

Given the operators were not successful in detecting the loss of cooling early enough to allow recovery of the normal cooling system, this event is modeled by functional fault tree LOC-OFD-L. At this stage, even though the operators have failed over several shifts to detect the need to respond, there would be several increasingly compelling cues available to the operators performing walk-downs, including a visibly lowered pool level and a hot and humid atmosphere. Since there are on the order of 88 hours before the level drops to 3 feet above the fuel, some credit has been taken for subsequent crews to recognize the loss of cooling and take corrective action.

4.1.5.2 Relevant Assumptions

- The operators have 88 hours to provide make-up.
- The operators will avoid using raw water (e.g., water not chemically controlled) if possible.
- The boil-off rate is assumed to be higher than the SFP make-up system capacity.
- The operators are aware that they must use raw water to refill the pool once the level drops to below the suction of the cooling system and the pool begins boiling, since the make-up system cannot compensate for the boiling.
- For repair of failed pumps, it is assumed that it takes 16 hours to contact maintenance personnel, identify the problem, and get new parts.

- There is a means to remotely align a make-up source to the spent fuel pool without entry to the refuel floor, so that make-up can be provided even when the environment is uninhabitable due to steam and/or high radiation (NEI commitment no.8).

- Repair crew is different than on-site operators.

- Mean time to repair the firewater pump is 10 hours.

- Operators have received formal training and there are procedures that include clear guidance on the use of the firewater system as a make-up system (NEI commitment no. 2).

- Firewater pumps are maintained and tested on a regular schedule (NEI commitment no. 10).

4.1.5.3 Quantification

Human Error Probabilities

Three human failure events are modeled in functional fault tree LOC-OFD
HEP-RECG-FWSTART represents the operator's failure to recognize the need to initiate the firewater system. The conditions under which the firewater system is to be used are assumed to be explicit in a written procedure. This event was quantified using the SPAR HRA technique. The assumptions include expansive time (> 24 hours), a high level of stress, diagnostic type procedures, good ergonomic interface, and good quality of work process. This diagnosis task provides the diagnosis for the subsequent actions taken to re-establish cooling to the pool.

HEP-FW-START represents failure to start the electric or diesel firewater pump within 88 hours after the onset of bulk boiling, given that the decision to start a firewater pump was made. No difficult valve alignment is required. This event was quantified using SPAR HRA technique. An expansive time (> 50 times the required time), high stress, highly complex task because of its non-routine nature, quality procedures available, as well as good ergonomics including equipment and tools matched to procedure, and crews that are conversant with the procedures and one another through training were assumed .

HEP-FW-REP-DEPEN represents the failure of the repair crew to repair a firewater pump. Note that the repair crew had failed to restore the SFPC system. Therefore, dependency was modeled in the failure to repair firewater system. We assume that the operator will focus his recovery efforts on only one pump. Assuming that it takes another two shifts (16 hours) before technical help and parts arrive, then the operator has 72 hours (88 hours less 16 hours) to repair the pump. Assuming a 10-hour mean time to repair, the probability of failure to repair the pump would be Exp [-(1/10) * 72] ≈ 1.0E-3. For HEP-FW-REP-DEPEN a low level of dependence was applied modifying the nominal failure probability of 1.0E-3 to 5.0E-2 using the THERP formulation for low dependence.

Functional fault tree LOC-OFD-L is similar except that basic event HEP-RECG-FWSTART is replaced by HEP-RECG-FWSTART-L. The probability of this event is 5E-2, representing a low level of dependence due to the fact that a failure to detect the condition during the first few shifts may be indicative of a more serious underlying problem.

September 5, 2000 (1:54PM)

Hardware Failure Probabilities

Basic event FP-2PUMPS-FTF represents the failure of both firewater pumps. The pump may be required to run 8 to 10 hours at the most (250 gpm capacity), given that the water inventory drops by 20 ft (i.e., 3 ft from the top of the fuel). A failure probability of 3.7E-3 for failure to start and run for the electric pump and 0.18 for the diesel driven pump are used from INEL-96/0334 (Ref. 12). Note that the relatively high unavailability assumed for the diesel driven firewater pump may be conservative if it is subject to a maintenance and testing program, and there are controls on availability. These individual pump failures result in a value of 6.7E-4 for event FP-2PUMPS-FTF.

4.1.5.4 Basic Event Probabilities

Basic Event	Basic Event Probability
HEP-RECG-FWSTART	2.0E-5
HEP-RECG-FWSTART-L	5.0E-2
HEP-FW-START	1.0E-5
HEP-FW-REP-DEPEN	5.0E-2
FP-2PUMPS-FTF	6.7E-4

4.1.6 Top Event OFB – Operator Recovery Using Off-site Sources

4.1.6.1 Event Description and Timing

This event accounts for recovery of coolant make-up using off-site sources given the failure of recovery actions using on-site sources. Adequate time is available for this action, provided that the operating staff recognizes that recovery of cooling using on-site sources will not be successful, and that off-site sources are the only viable alternatives. This top event is quantified using fault tree LOC-OFB, for the upper two branches, and LOC-OFB-L for the lowest branch. Note that in this fault tree event HEP-INV-OFFSITE is ORed with the failure of the operator to recognize the need to start the firewater system (event HEP-RECG-FWSTART or HEP-RECG-FWSTART-L , described in Section 4.1.5.3). In essence, if the operators fail to recognize the need for firewater, it is assumed they will fail to recognize the need for other off-site sources of make-up.

4.1.6.2 Relevant Assumptions

- The operators have 88 hours to provide make-up and inventory cooling.
- Procedures and training are in place that ensure that off-site resources can be brought to bear (NEI commitment no. 2 and 4), and that preparation for this contingency is made when it is realized that it may be necessary to supplement the pool make-up.
- Procedures explicitly state that if the water level drops below a certain level (e.g., 15 ft below normal level) operator must initiate recovery using off-site sources.
- Operators have received formal training in the procedures.
- Off-site resources are familiar with the facility.

4.1.6.3 Quantification

Human Error Probabilities

The event HEP-INV-OFFSITE represents failure to recognize that it is necessary to take the extreme measure of using off-site sources, given that even though there has been ample time up to this point to attempt recovery of both the SFP cooling system and both firewater pumps it has not been successful. This top event should include contributions from failure of both the diagnosis of the need to provide inventory from off-site sources, and of the action itself. The availability of off-site resources is assumed not to be limiting on the assumption of an expansive preparation time. However, rather than use a calculated HEP directly, a low level of dependence on the failure to recognize the need to initiate the firewater system was assumed.

4.1.6.4 Basic Event Probability

Basic Event	Basic Event Probability
HEP-INV-OFFSITE	5.0E-2

4.1.7 Summary

Table 4.1 presents a summary of basic event probabilities used in the event tree quantification.

Based on the assumptions made, the frequency of fuel uncovery can be seen to be very low. A careful and thorough adherence to NEI commitments 2, 5, 8 and 10 is crucial to establishing the low frequency. In addition, however, the assumption that walk-downs are performed on a regular, (once per shift) basis is important to compensate for potential failures to the instrumentation monitoring the status of the pool. The analysis has also assumed that the procedures and/or training are explicit in giving guidance on the capability of the fuel pool make-up system, and when it becomes essential to supplement with alternate higher volume sources. The analysis also assumed that the procedures and training are sufficiently clear in giving guidance on early preparation for using the alternate make-up sources.

Table 4.1 Basic Event Summary for the Loss of Cooling Event Tree

Basic Event Name	Description	Basic Event Probability
IE-LOC	Loss of SFP cooling initiating event	3.0E-3
HEP-DIAG-ALARM	Operators fail to respond to a signal indication in the control room	3.0E-4
HEP-WLKDWN-LSFPC	Operators fail to observe the loss of cooling in walk-downs (independent case)	1.0E-5
HEP-WLKDWN-DEPEN	Operators fail to observe the loss of cooling in walk-downs (dependent case)	5.0E-2
HEP-COOL-REP-E	Repair crew fails to repair SFPC system	1.8E-1
HEP-COOL-REP-L	Repair crew fails to repair SFPC system - Late	1.0
HEP-RECG-FWSTART	Operators fail to diagnose need to start the firewater system	2.0E-5
HEP-RECG-FWSTART-L	Operators fail to diagnose need to start firewater system - dependent case	5.0E-2
HEP-FW-START	Operators fail to start firewater pump and provide alignment	1.0E-5
HEP-FW-REP-DEPEN	Repair crew fails to repair firewater system - dependent case	5.0E-2
HEP-INV-OFFSITE	Operators fail to provide alternate sources of cooling from off-site	5.0E-2
FP-2PUMPS-FTF	Failure of firewater pump system	6.7E-4
SPC-LVL-LOP	Local faults leading to alarm channel failure	2.0E-3

4.2 Internal Fire Event Tree

This event tree models the loss of SFP cooling caused by internal fires. Given a fire alarm, the operator will attempt to suppress the fire, and then attempt to re-start SFP cooling given that the SFP cooling system and off-site power feeder system have not been damaged by the fire. In the unlikely event that the operator fails to respond to the alarms or is unsuccessful in suppressing the fire, it is assumed that the SFPC system will be damaged to the extent where repair will not be possible. The operator then has to provide alternate cooling and inventory make-up – either using the site firewater system or by calling upon off-site resources. Figure 4.2 shows the Internal Fire event tree sequence progression.

4.2.1 Initiating Event FIR – Internal Fire

4.2.1.1 Event Description and Timing

The fire initiator includes those fires of sufficient magnitude, that if not suppressed, would cause a loss of cooling to the SFP. This loss of cooling could either result from damage to the SFPC system or the off-site power feeder system.

4.2.1.2 Relevant Assumptions

- Fire ignition frequencies from operating plants are assumed to be applicable at the SFP facility.
- Ignition sources from welding and cutting are expected to be insignificant. The facility configuration is expected to be stable, negating the need for modification and fabrication work requiring welding and cutting.

4.2.1.3 Quantification

Data compiled from historical fires at nuclear power plants is summarized in the Fire-Induced Vulnerability Evaluation (FIVE) methodology document (Ref. 13). This document identifies fire ignition sources and associated frequencies and is segregated by plant location and ignition type. Of the plant locations identified in the FIVE document, the intake structure was considered to most closely approximate the conditions and equipment associated with the spent fuel pool facilities considered in this analysis.

FIVE identifies specific frequencies associated with "electrical cabinets," "fire pumps," and "others" in the intake structure. In addition to these frequencies associated with specific equipment normally located in the intake structure, ignition sources from equipment (plant-wide) that may be located in the intake structure is also apportioned.

The largest ignition frequency contribution identified for intake structures is from fire pumps. In the plant configuration assumed in this study, the firewater pumps are located in an unattached structure and thus can be eliminated as ignition sources. FIVE also identifies electrical cabinets as significant ignition sources in the intake structure with an average frequency of 2.4E-3/yr. Because the number of electrical cabinets (breakers) in the spent fuel facility is expected to be less than those in the typical intake structure, a scaling factor was used to estimate the electrical cabinet contribution. Typically there are five motor-driven pumps (4 cooling pumps, 1 make-up pump) and related support equipment associated with the SPF facility. The number of electrical cabinets (breakers) was therefore estimated to be less than ten in a typical SFP facility. The number of electrical cabinets in the intake structure was estimated to be 25 (engineering judgement based on plant walk-downs). Therefore, the fire ignition frequency contribution from electrical cabinets at the spent fuel pool facility is estimated to be (10/25)(2.4E-3/yr) = 9.6E-4/yr.

September 5, 2000 (1:54PM)

Figure 4.2 Fire initiating event tree

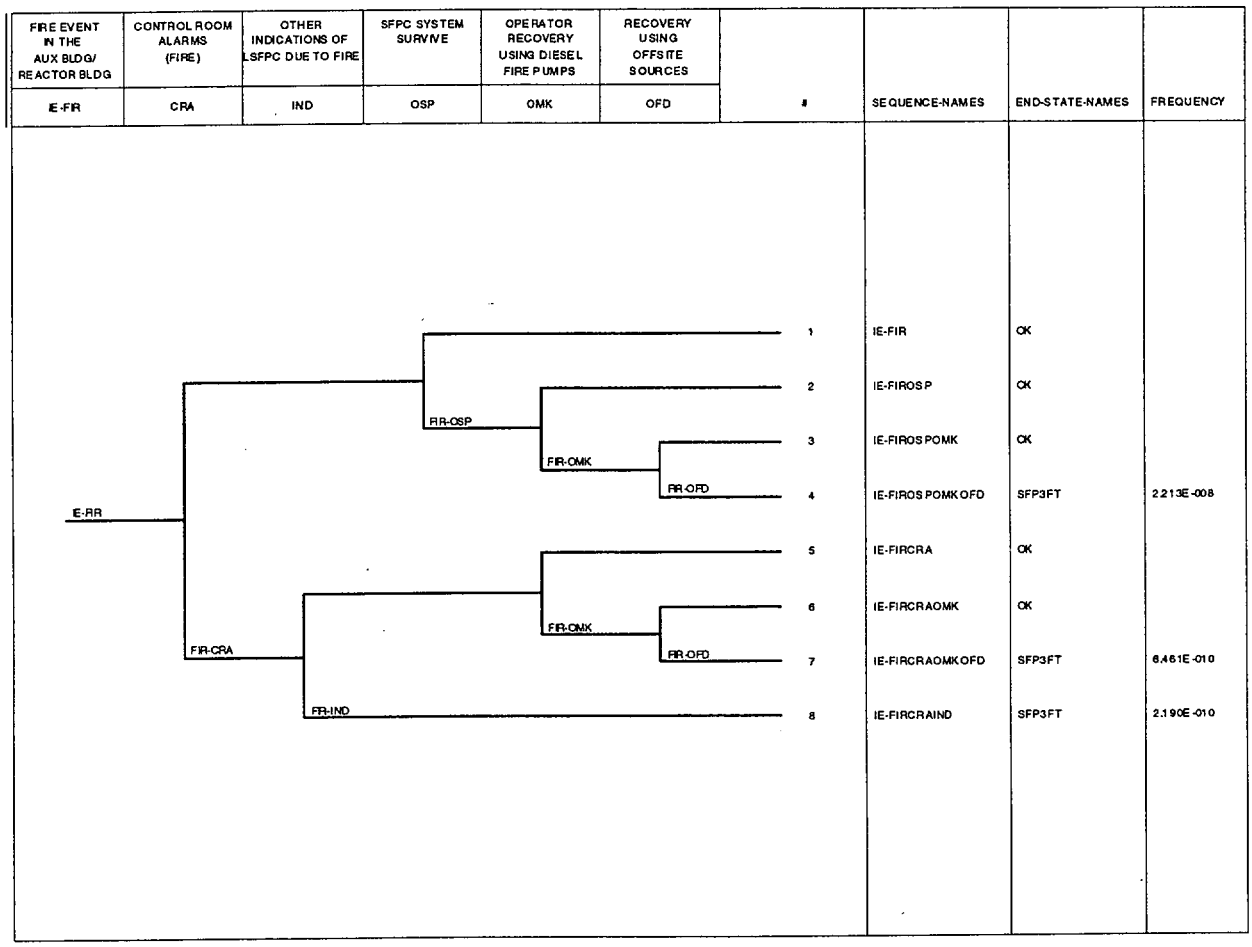

A similar approach was used to correlate the ignition frequency for "other" to a value appropriate for the SFP facility. Intake structures typically have several pumps (e.g., circulating water, service water, screen wash, fire, etc.) as well as peripheral equipment. For this analysis, all ignition frequency associated with the "other" category was apportioned to pumps. The number of pumps in the typical intake structure was estimated to be 10 (again, engineering judgement based on plant walk-downs). Therefore, the fire ignition frequency for "other" equipment at the spent fuel pool facility is estimated to be (5/10)(3.2E-3/yr) = 1.6E-3/yr.

The contribution of ignition sources, identified as "plant-wide" sources in the FIVE document, to the ignition frequency of the SFP facility is considered to be negligible. Large ignition source contributors such as elevator motors, dryers, and MG sets do not exist in the spent fuel facility. Additionally, spontaneous cable fires are expected to be a negligible contributor because of the minimal amount of energized electrical cable. The facility configuration is expected to be stable, negating the need for modification and fabrication work requiring welding and cutting.

The fire ignition frequency for the SFP facility is therefore estimated to be 9.6E-4/yr + 1.6E-3/yr = 2.6E-3/yr. A fire frequency value of 3E-3/yr will be used in the analysis to provide additional margin and to account for any uncertainties in equipment configuration.

4.2.1.4 Basic Event Probability

Basic Event	Basic Event Probability
IE-FIRE	3.0E-3

4.2.2 Top Event CRA – Control Room Alarms

4.2.2.1 Event Description and Timing

This event represents fire detection system failure to alarm in the control room or operator failure to respond to the alarm. The proper conditions for an alarm are assumed to exist within a few minutes of fire initiation. Failure to respond could be due to operator error (failure to respond), failure of the detectors, or loss of indication due to electrical faults. Success for this event is defined as the operator recognizing the alarm and responding to the fire. Failure of this event is assumed to lead to a fire damage state where there is a loss of the SFPC system and a loss of the plant power supply system. This event is quantified by fault tree FIR-CRA and includes hardware and human failures.

4.2.2.2 Relevant Assumptions

- The SFP area is equipped with fire detectors which are alarmed in the control room. However, the area is not equipped with an automatic fire suppression system.
- Fire alarms will be activated in the control room within a few minutes of the initiation of a fire.
- Regular maintenance and testing is performed on the fire detection system and on the control room annunciators.
- Procedures are available to guide operator response to a fire, and plant operators are trained in these procedures (NEI commitment no. 2).

4.2.2.3 Quantification

Human Error Probabilities

One human failure event is modeled for this event (basic event HEP-DIAG-ALARM). The operator may fail to respond to a signal or indication in the control room. The source for this error rate is THERP (Table 20-23).

Hardware Failure Probabilities

The value used for failure of the detectors, SFP-FIRE-DETECT (5.0E-3), was taken from OREDA-92 (Ref. 14). The value used for local electrical faults leading to alarm channel failure, SFP-FIRE-LOA (2.0E-3), was estimated based on information in reference 11.

4.2.2.4 Basic Event Probabilities

Basic Event	Basic Event Probability
HEP-DIAG-ALARM	3.0E-4
SFP-FIRE-LOA	2.0E-3
SFP-FIRE-DETECT	5.0E-3

4.2.3 Top Event IND – Other Indications of Loss of Cooling

4.2.3.1 Event Description and Timing

This event models the failure of the operators to recognize the loss of SFP cooling resulting from a fire, given that either the fire alarm system failed or was not attended to. Since the assumed consequences of not attending to the alarm are a fire large enough to cause loss of power to the facility, the indications available to the operator during a walk-down include clear effects of the fire, both from visible evidence and the smell of burning, as well as the lack of power. Ultimately, if no action is taken to restore cooling, the high area temperature and humidity, and low water level from boiloff will become increasingly evident. The operators have more than 10 shifts (about 131 hours) to discover the loss of SFP cooling. Success for this event is defined as the operators recognizing the abnormal condition and understanding the need to take action within this time. This event is modeled by fault tree FIR-IND.

4.2.3.2 Relevant Assumptions

- Operators perform walk-downs once per shift (every 8 to 12 hours) and walk-downs are required to be logged.
- If the fire is discovered during the walk-down, the SFPC system is assumed to be damaged to the extent where repair will not be feasible within a few days.
- Local instrumentation and alarms are destroyed in a fire which is not extinguished within 20 minutes.
- Procedures are available to guide plant operators for off-normal conditions, and

operators are trained in these procedures (NEI commitment no. 2).

4.2.3.3 Quantification

Human Error Probability

This event is represented by the basic event HEP-WLKDWN-LSFPC which models the operators' failure to recognize the loss of cooling during walk-downs. The failure rate was developed using THERP, and is based upon three individual failures: failure to carry out an inspection, missing a step in a written procedure, and misreading a measuring device. Multiple opportunities for recovery were assumed.

Note that no dependency on the previous HEP was modeled. While it could be argued that, in the case where the operator has already failed to respond to control room alarms, there may be a dependence between the event HEP-DIAG-ALARM and HEP-WLKDWN-LSFPC. However, the cues for this event are quite different. There will be obvious physical changes in the plant (e.g., loss of off-site power, a burnt out area, smoke, etc.). The only source of dependency is one where a situation would result in the operators failing to respond to control room alarms and also result in a total abandonment of plant walk-downs.

4.2.3.4 Basic Event Probability

Basic Event	Basic Event Probability
HEP-WLKDWN-LSFPC	1.0E-5

4.2.4 Top Event OSP – Fire Suppression

4.2.4.1 Event Description and Timing

This top event represents operator failure to suppress the fire before the SFP cooling system is damaged given that he responds to fire alarms. If the SFP cooling and make-up system pumps and plant power supply system are damaged to a point that they cannot be repaired in time to prevent fuel uncovery, the operator must provide cooling using available on-site (i.e., diesel fire pumps) and off-site water sources. If the fire is suppressed in time to prevent damage to SFP components, then the SFP cooling system can be restored in time to prevent fuel uncovery. The top event is represented by fault tree FIR-OSP.

4.2.4.2 Relevant Assumptions

- The automatic fire suppression system is unavailable.
- If the fire is not extinguished within 20 minutes, it is assumed that SFP cooling will be lost due either to damage of SFPC equipment, or to the plant's power supply system.
- No credit is taken for the firewater system in the suppression of the fire.
- Fire suppression extinguishers are located strategically in the SFP area, and these extinguishers are tested periodically.

4.2.4.3 Quantification

Failure of fire suppression is represented by basic event HEP-RES-FIRE. The modeling of fire growth and propagation and the determination of the effects of a fire on equipment in a room would optimally take into account the combustible loading in the room, the presence of intervening combustibles, the room size and geometry, and other characteristics such as ventilation rates and the presence of openings in the room. Because detailed inputs such as these are not applicable for a generic study such as this, fire growth and propagation was determined based on best estimate assumptions. It is assumed that the operator has 20 minutes to suppress the fire. Otherwise, it is assumed that SFP cooling will be lost (due either to damage of SFPC equipment, or to the plant's power supply system).

HEP-RES-FIRE was modeled using THERP. Due to the level of uncertainty about the size of the fire, its location, and when it is discovered, the approach taken was to model this error as a dynamic task requiring a higher level of human interaction, including keeping track of multiple functions. In addition little experience in fighting fires was assumed. Table 20-16 in THERP provides modifications of estimated HEPs for the effects of stress and experience. Using the performance shaping factors of extremely high stress (as fighting a fire would be), a dynamic task, and an operator experienced in fighting fires, this table provides an HEP of 2.5E-1.

Notes: (1) It can be argued that damage time (to disable the SFP cooling function) could be in excess of 20 minutes because typical SFP facilities are relatively large and because equipment within such facilities is usually spread out. However, in this analysis, the SFP pumps are assumed to be located in the same general vicinity with no fire barriers between them.

(2) Scenarios can be postulated where the fire damage state is less severe than that described above (e.g., fire damage to the running cooling pump, with the other pump undamaged, and with off-site power available). These scenarios can be subsumed into the "Loss of Cooling" event, and SFP cooling "recovery" in these cases would be by use of the undamaged pump train.

4.2.4.4 Basic Event Probability

Basic Event	Basic Event Probability
HEP-RES-FIRE	2.5E-1

4.2.5 Top Event OMK – Operator Recovery Using On-site Sources

4.2.5.1 Event Description and Timing

At this point in the event tree, the SFP cooling has been lost as a result of the fire, and the operators are unable to restore the cooling system. Also, the fire has damaged the electrical system such that the motor-driven firewater pump is unavailable. If no actions are taken, SFP water level would drop to 3 ft above the top of fuel in 131 hours from the time the loss of SFP cooling occurred. This event represents failure of the operators to start the diesel-driven firewater pump and provide make-up to the SFP. If the diesel firewater pump fails, the operators have time to attempt repair. This event is modeled by fault tree FIR-OMK.

4.2.5.2 Relevant Assumptions

- There is a means to remotely align a make-up source to the spent fuel pool without entry to the refuel floor, so that make-up can be provided even when the environment is uninhabitable due to steam and/or high radiation (NEI commitment no.8).
- Inventory make-up using the firewater system is initiated by on-site operators.
- In modeling the repair of a failed firewater pump, it is assumed that it takes 16 hours to contact maintenance personnel, make a diagnosis, and get new parts.
- Mean time to repair the firewater pump is 10 hours.
- Inventory make-up using the firewater pumps is proceduralized, and the operators are trained in these procedures (NEI commitment no. 2).
- Firewater pumps are tested and maintained on a regular schedule (NEI commitment no. 10).

4.2.5.3 Quantification

Human Error Probabilities

The fault trees used to quantify this top event include three human failure events.

HEP-RECG-FWSTART represents the operators' failure to recognize the loss of SFP cooling and the need to initiate the firewater system. This event was quantified using the SPAR HRA technique. The assumptions include expansive time (> 24 hours), a high level of stress, diagnostic type procedures, good ergonomic interface, and good quality of work process. This diagnosis task provides the diagnosis for the subsequent actions taken to re-establish cooling to the pool. Although this diagnosis and subsequent actions follow a fire, no dependence between response to the fire and subsequent actions is assumed, because of the large time lag.

HEP-FW-START represents failure to start the diesel firewater pump within 88 hours after the onset of bulk boiling, given that the decision to start a firewater pump was made. No difficult valve alignment is required, but the operators may have to run hoses to designated valve stations. This event HEP-FW-START was quantified using SPAR HRA technique. The following PSFs were assumed: expansive time (> 50 times the required time), high stress, highly complex task because of the multiple steps, its non-routine nature, quality procedures available, as well as good ergonomics including equipment and tools matched to procedure, and finally a crew who had executed these tasks before, conversant with the procedures and one another.

HEP-FW-REP-NODEP represents the failure of the repair crew to repair a firewater pump. It is assume that the operators will focus their recovery efforts on only the diesel driven pump. Assuming that it takes 16 hours before technical help and parts arrive, then the operators have 72 hours (88 hours less 16 hours) to repair the pump. Assuming a 10-hour mean time to repair, the probability of failure to repair the pump would be Exp [-(1/10)x72] ≈ 1.0E-3.

September 5, 2000 (1:54PM)

Hardware Failure Probabilities

Basic event FP-DGPUMP-FTF represents the failure of the diesel-driven firewater pump. The pump may be required to run 8 to 10 hours at the most (250 gpm capacity), given that the water inventory drops by 20 ft (i.e., 3 ft from the top of the fuel). A failure probability of 1.8E-1 for failure to start and run for the diesel driven pump is used from INEL-96/0334 (Ref. 12).

4.2.5.4 Basic Event Probabilities

Basic Event	Basic Event Probability
HEP-RECG-FWSTART	2.0E-5
HEP-FW-START	1.0E-5
HEP-FW-REP-NODEP	1.0E-3
FP-DGPUMP-FTF	1.8E-1

4.2.6 Top Event OFD – Operator Recovery Using Off-site Sources

4.2.6.1 Event Description and Timing

Given the failure of recovery actions using on-site sources, this event accounts for recovery of coolant make-up using off-site sources. Adequate time is available for this action, provided that the operators recognize that recovery of cooling using on-site sources will not be successful, and that off-site sources are the only viable alternatives. This top event is quantified using fault tree FIR-OFD. This event is represented by a basic event HEP-INV-OFFSITE.

4.2.6.2 Relevant Assumptions

- The operators have 88 hours to provide make-up and inventory cooling.
- Procedures and training are in place that ensure that off-site resources can be brought to bear (NEI commitment no. 2 and 4), and that preparation for this contingency is made when it is realized that it may be necessary to supplement the pool make-up.
- Procedures explicitly state that if the water level drops below a certain level (e.g., 15 ft below normal level) operator must initiate recovery using off-site sources.
- Operators have received formal training in the procedures.
- Off-site resources are familiar with the facility.

4.2.6.3 Quantification

Human Error Probabilities

The event HEP-INV-OFFSITE represents failure to recognize that it is necessary to take the extreme measure of using off-site sources, given that even though there has been ample time up to this point to attempt recovery of the firewater pump, it has not been successful. This top event should include failures of both the diagnosis of the need to provide inventory from off-site sources, and of the action itself. The availability of off-site resources is assumed not to be limiting on the assumption of an expansive preparation time. However, rather than use a calculated HEP directly, a low level of dependence to account for the possible detrimental effects of the failure to complete prior tasks successfully.

4.2.6.4 Basic Event Probability

Basic Event	Basic Event Probability
HEP-INV-OFFSITE	5.0E-2

4.2.7 Summary

Table 4.2 presents a summary of basic event probabilities used in the event tree quantification.

As in the case of the loss of cooling event, the frequency of fuel uncovery, based on the assumptions made in the analysis, is very low. The assumptions that support this low value include: careful and thorough adherence to NEI commitments 2, 5, 8 and 10; walk-downs are performed on a regular, (once per shift) (important to compensate for potential failures to the instrumentation monitoring the status of the pool); procedures and/or training are explicit in giving guidance on the capability of the fuel pool make-up system, and when it becomes essential to supplement with alternate higher volume sources; procedures and training are sufficiently clear in giving guidance on early preparation for using the alternate make-up sources.

Table 4.2 Basic Event Summary for the Internal Fire Event Tree

Basic Event Name	Description	Basic Event Probability
IE-FIRE	Internal fire initiating event	3.0E-3
HEP-DIAG-ALARM	Operators fail to respond to a signal indication in the control room	3.0E-4
HEP-RES-FIRE	Operators fail to suppress fire	2.5E-1
HEP-WLKDWN-LSFPC	Operators fail to observe the loss of cooling in walk-downs (independent case)	1.0E-5
HEP-RECG-FWSTART	Operators fail to diagnoses need to start the firewater system	2.0E-5
HEP-FW-START	Operators fail to start firewater pump and provide alignment	1.0E-5
HEP-FW-REP-NODEP	Repair crew fails to repair firewater system	1.0E-3
HEP-INV-OFFSITE	Operators fail to provide alternate sources of cooling from off-site	5.0E-2
FP-DGPUMP-FTF	Failure of firewater pump system	0.18
SFP-FIRE-LOA	Electrical faults causing loss of alarms	2.0E-3
SFP-FIRE-DETECT	Failure of fire detectors	5.0E-3

4.3 Plant-centered and Grid-related Loss of Off-site Power Event Tree

This event tree represents the loss of SFP cooling resulting from a loss of off-site power from plant-centered and grid-related events. Until off-site power is recovered, the electrical pumps would be unavailable, and only the diesel fire pump would be available to provide make-up.

Figure 4.3 shows the Plant-centered and Grid-related Loss of Off-site Power (LOSP) event tree sequence progression.

4.3.1 Initiating Event LP1 – Plant-centered and Grid-related Loss of Off-site Power

4.3.1.1 Event Description

Initiating event IE-LP1 represents plant-centered and grid-related losses of off-site power. Plant-centered events typically involve hardware failures, design deficiencies, human errors (in maintenance and switching), localized weather-induced faults (e.g., lightning), or combinations of these. Grid-related events are those in which problems in the off-site power grid cause the loss of off-site power.

4.3.1.2 Quantification

For plant-centered LOSP events, NUREG/CR-5496 (Ref. 16) estimates a frequency of .04/critical year for plant centered loss of off-site power for an operating plant, and .18/unit shutdown year for a shutdown plant. For grid-related LOSP events, a frequency of 4E-3/site-yr was estimated. The frequency of grid-related losses is assumed to be directly applicable. However, neither of the plant centered frequencies is directly applicable. At a decommissioning plant there will no longer be the necessity to have the multiplicity of incoming lines typical of operating plants, which could increase the frequency of loss of off-site power from mechanical failures. On the other hand, the plant will be a normally operating facility, and it would be expected that there will be less activity and operations in the switchyard than would be expected at a shutdown plant, which would decrease the frequency of loss from human error, the dominant cause of losses for shutdown plants. For purposes of this analysis, the LOSP initiating event frequency of 0.08/yr, assumed in INEL-96/0334 (Ref. 13), is assumed for the combined losses from plant-centered and grid-related events.

4.3.2 Top Event OPR – Off-site Power Recovery

4.3.2.1 Event Description and Timing

The fault tree for this top event (LP1-OPR) is a single basic event that represents the non-recovery probability of off-site power.

NUREG-1032 (Ref. 17) classified LOSP events into plant-centered, grid-related, and severe-weather-related categories, because these categories involved different mechanisms and also seemed to have different recovery times. Similarly, NUREG/CR-5496 (Ref. 16) divides LOSP events into three categories and estimates different values of non-recovery as functions of time.

4.3.2.2 Relevant Assumptions

- Trained electricians may not be present at the site for quick recovery from plant-centered events.

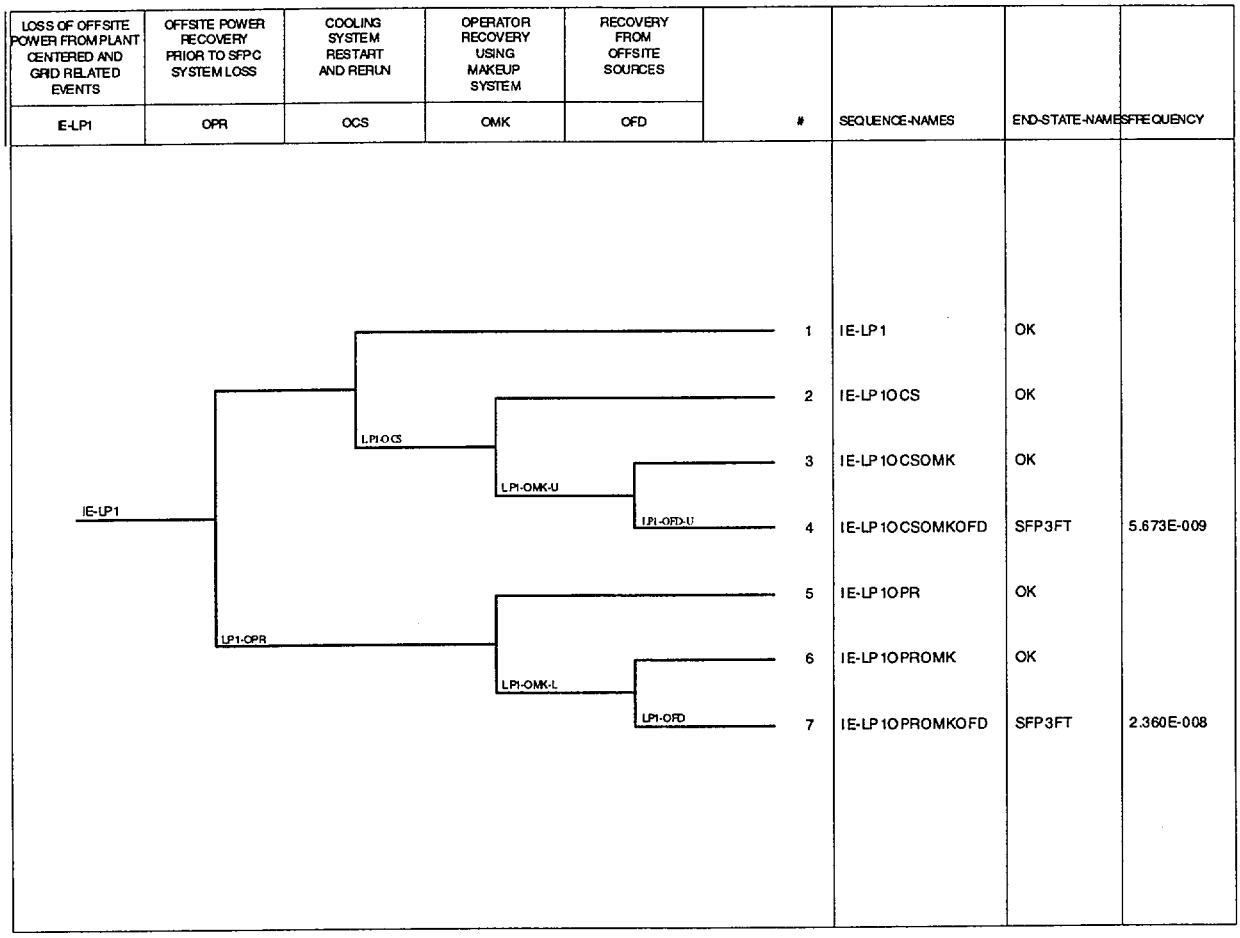

Figure 4.3 Plant centered and grid related loss of off-site power event tree

4.3.2.3 Quantification

The basic event that represents recovery of off-site power for plant-centered and grid-related LOSP is REC-OSP-PC. The data in NUREG/CR-5496 indicates that one event in 102 plant centered events resulted in a loss for greater than 24 hours, and all 6 of the grid centered events were recovered in a relatively short time. The majority of the plant-centered events were recovered within 7 hours, so even if there is a delay in bringing repair personnel on-site, there is a high probability of recovering off-site power within 24 hours. Therefore a non-recovery probability of 1E-02 is assumed.

4.3.2.4 Basic Event Probability

Basic Event	Basic Event Probability
REC-OSP-PC	1E-02

4.3.3 Top Event OCS – Cooling System Restart and Run

4.3.3.1 Event Description and Timing

This top event represents restarting the SFP cooling system, given that off-site power has been recovered within 24 hours. There are two electrically operated pumps and the operator can start either one. If the operator starts the pump that was in operation, no valve alignment would be required. However, if the operator starts the standby pump, some valve alignment may be required.

Fault tree LP1-OCS has several basic events: an operator action representing the failure to establish SFP cooling, and several hardware failures of the system. If power is recovered within 24 hours, the operator has 9 hours to start the system before boil-off starts.

4.3.3.2 Relevant Assumptions

- The operators have 9 hours to start the SFP cooling system.
- The SFP has at least one SFP water temperature monitor, with either direct indication or a trouble light in the control room (there could also be indications or alarms associated with pump flow and pressure) (NEI commitment no. 5).
- Procedures exist for response to and recovery from a loss of power, and the operators are trained in their use (NEI commitment no. 2).

4.3.3.3 Quantification

Human Error Probabilities

Event HEP-SFP-STR-LP1 represents operator failure to restart/realign the SFP cooling system in 9 hours. The operator can restart the previously running pump and may not have to make any valve alignment. If he decides to restart the standby pump he may have to make some valve alignment. The response part of the error was quantified using SPAR. The relevant performance shaping factors for this event included expansive time, high stress due to previous

failures, moderately complex task due to potential valve lineups, highly trained staff, good ergonomics (well laid out and labeled matching procedures), and good work process.

A diagnosis error HEP-DIAG-SFPLP1, representing failure of the operators to recognize the loss of SFP cooling was also included. Success would most likely result from recognition that the electric pumps stop running once power is lost and require restart following recovery of power. If the operator fails to make an early diagnosis of loss of SFP cooling, then success could still be achieved during walk-downs following the loss of off-site power. Alternatively, if power is restored, the operator will have alarms available as well. Therefore this value consists of two errors. The diagnosis error was calculated using SPAR, and the walk-down error was calculated using THERP. The relevant performance shaping factors included greater than 24 hours for diagnosis, high stress, well-trained operators, diagnostic procedures, and good work processes. A low dependence for the walk-down error was applied.

Because it is assumed that at most 9 hours are available, no credit was given for repair of the SFP cooling system.

Non-HEP Probabilities

Fault tree LP1-OCS represents failure of the SFP cooling system to restart and run. Hardware failure rates have been taken from INEL-96/0334 (Ref. 13). It is assumed that SFPC system will be maintained since it is required to be running all the time.

4.3.3.4 Basic Event Probabilities

Basic Event	Basic Event Probability
HEP-DIAG-SFPLP1	1.0E-06
HEP-SFP-STR-LP1	5.0E-6
SPC-CKV-CCF-H	1.9E-5
SPC-CKV-CCF-M	3.2E-5
SPC-HTX-CCF	1.9E-5
SPC-HTX-FTR	2.4E-4
SPC-HTX-PLG	2.2E-5
SPC-PMP-CCF	5.9E-4
SPC-PMP-FTF-1	3.9E-3
SPC-PMP-FTF-2	3.9E-3

4.3.4 Top Event OMK – Operator Recovery Using Make-up Systems

4.3.4.1 Event Description and Timing

This top event represents the failure to provide make-up using the firewater pumps. If off-site power is recovered then the fault tree LP1-OMK-U represents this top event. In this case, the operator has both electric and diesel firewater pumps available. If off-site power is not recovered then fault tree LP1-OMK-L represents this top event. In this case, the operator has only the diesel firewater pump available.

4.3.4.2 Relevant Assumptions

- It is assumed that the procedures guide the operators to wait until it is clear that spent fuel pool cooling cannot be reestablished (e.g., using cues such as the level drops to below the suction of the cooling system or the pool begins boiling) before using alternate make-up sources. Therefore, they have 88 hours to start a firewater pump.
- There is a means to remotely align a make-up source to the spent fuel pool without entry to the refuel floor, so that make-up can be provided even when the environment is uninhabitable due to steam and/or high radiation (NEI commitment no.8).
- Repair crew is different than on-site operators.
- Repair crew will focus recovery efforts only on one pump.
- On average, it takes 10 hours to repair a pump if it fails to start and run.
- It takes 16 hours to contact maintenance personnel, make a diagnosis, and get new parts.
- Both firewater pumps are located in a separate structure or protected from the potential harsh environment in case of pool bulk boiling.
- Maintenance is performed per schedule on diesel and electric firewater pumps to maintain operable status.
- Operators have received formal training on relevant procedures.

4.3.4.3 Quantification

Human Error Probabilities

The fault tree LPI-OMK-U includes five human failure events and LPI-OMK-L has three.

Two events are common. HEP-RECG-FWSTART represents the failure of the operator to recognize the need to initiate firewater as an inventory make-up system, given that a loss of fuel pool cooling has been recognized. This event was quantified using the SPAR HRA technique. The assumptions included expansive time (> 24 hours), a high level of stress, diagnostic type procedures, good ergonomic interface, and good quality of work process.

HEP-FW-START represents failure to start either the electric or diesel firewater pump (depending upon availability) within 88 hours after the onset of bulk boiling, given that the decision to start a firewater pump was made. No difficult valve alignment is required, but the operator may have to run hoses to designated valve stations. This event was quantified using the SPAR HRA technique. The PSFs included expansive time (> 50 times the required time), high stress, highly complex task because of the multiple steps, its non-routine nature, quality procedures available, as well as good ergonomics including equipment and tools matched to procedure, and finally a crew who had executed these tasks before, conversant with the procedures and one another.

HEP-FW-REP-NODEP represents the failure of the repair crew to repair a firewater pump for the scenario where power is not recovered. Note that it has been assumed that since power is not recovered, the repair crew did not make any attempt to repair the SFPC system, and therefore no dependency was modeled in the failure to repair the firewater system. Assuming that it takes another 16 hours before technical help and parts arrive, then the operator has 72 hours (88 hours less 16 hours) to repair the pump. Assuming a 10-hour mean time to repair, the probability of failure to repair the pump would be Exp [-(1/10) (72] ≈ 1.0E-3. This event is modeled in the fault tree, LP1-OMK-L.

HEP-FW-REP-DEPEN represents the failure of the repair crew to repair a firewater pump. Note that repair was not credited for top event OCS; however, it has been assumed that the repair crew would have made an attempt to restore the SFPC system, and so dependency was modeled in the failure to repair the firewater system. A probability of failure to repair a pump in 88 hrs is estimated to be 1.0E-3. For HEP-FW-REP-DEPEN a low level of dependence was applied modifying the failure rate of 1.0E-3 to 5.0E-2 using the THERP formulation for low dependence. This event is modeled in the fault tree, LP1-OMK-U.

In addition, in fault tree LP1-OMK-U, the possibility that no action is taken has been included by incorporating an AND gate with basic events HEP-DIAG-SFPLPI and HEP-RECG-DEPEN. The latter is quantified on the assumption of a low dependency.

Hardware Failure Probabilities

In the case of LP1-OMK-U, both firewater pumps are available. Failure of both firewater pumps is represented by basic event FP-2PUMPS-FTF. In the case of LP1-OMK-L, only the diesel-driven firewater pump is available, and its failure is represented by basic event FP-DGPUMP-FTF.

The pump may be required to run 8 to 10 hours at the most (250 gpm capacity), given that the water inventory drops by 20 ft (i.e., 3 ft above the top of the fuel). A failure probability of 3.7E-3 for failure to start and run for the electric pump and 0.18 for the diesel driven pump are used from INEL-96/0334. These individual pump failures result in a value of 0.18 for event FP-DGPUMP-FTF and 6.7E-4 for event FP-2PUMPS-FTF.

4.3.4.4 Basic Event Probabilities

Basic Event	Basic Event Probability
HEP-RECG-DEPEN	5.0E-02
HEP-RECG-FWSTART	2.0E-5
HEP-FW-START	1.0E-5
HEP-FW-REP-DEPEN	5.0E-2
HEP-FW-REP-NODEP	1.0E-3
FP-2PUMPS-FTF	6.7E-4

Basic Event	Basic Event Probability
FP-DGPUMP-FTF	1.8E-1

4.3.5 Top Event OFD – Operator Recovery Using Off-site Sources

4.3.5.1 Event Description and Timing

Given the failure of recovery actions using on-site sources, this event accounts for recovery of coolant make-up using off-site sources such as procurement of a fire engine. Adequate time is available for this action, provided that the operator recognizes that recovery of cooling using on-site sources will not be successful, and that off-site sources are the only viable alternatives. Fault tree LP1-OFD represents this top event for the lower branch, and LP1-OFD-U for the upper branch. These fault trees contains those basic events from the fault trees LP1-OMK-U and LP1-OMK-L that relate to recognition of the need to initiate the fire water system; if OMK fails because the operator failed to recognize the need for firewater make-up, then it is assumed that the operator will fail here for the same reason.

4.3.5.2 Relevant Assumptions

- The operators have 88 hours to provide make-up and inventory cooling.
- Procedures and training are in place that ensure that off-site resources can be brought to bear (NEI commitments 2 and 4), and that preparation for this contingency is made when it is realized that it may be necessary to supplement the pool make-up.
- Procedures explicitly states that if the water level drops below a certain level (e.g., 15 ft below normal level) operator must initiate recovery using off-site sources.
- Operators have received formal training in the procedures.
- Off-site resources are familiar with the facility.

4.3.5.3 Quantification

<u>Human Error Probabilities</u>

The event HEP-INV-OFFSITE represents failure to recognize that it is necessary to take the extreme measure of using off-site sources, given that even though there has been ample time up to this point to attempt recovery of both the SFP cooling system and both firewater pumps it has not been successful. This top event includes failures of both the diagnosis of the need to provide inventory from off-site sources, and the action itself. The availability of off-site resources is assumed not to be limiting on the assumption of an expansive preparation time. However, rather than use a calculated HEP directly, a low level of dependence is used to account for the possible detrimental effects of the failure to complete prior tasks successfully.

4.3.5.4 Basic Event Probability

Basic Event	Basic Event Probability
HEP-INV-OFFSITE	5.0E-2

4.3.6 Summary

Table 4.3 presents a summary of basic event probabilities used in the quantification of the Plant-centered and Grid-related Loss of Off-site Power event tree.

As in the case of the loss of cooling, and fire initiating events, based on the assumptions made, the frequency of fuel uncovery can be seen to be very low. Again, a careful and thorough adherence to NEI commitments 2, 5, 8 and 10, the assumption that walk-downs are performed on a regular, (once per shift) basis is important to compensate for potential failures to the instrumentation monitoring the status of the pool, the assumption that the procedures and/or training are explicit in giving guidance on the capability of the fuel pool make-up system, and when it becomes essential to supplement with alternate higher volume sources, the assumption that the procedures and training are sufficiently clear in giving guidance on early preparation for using the alternate make-up sources, are crucial to establishing the low frequency.

Table 4.3 Basic Event Summary for the Plant-centered and Grid-related Loss of Off-site Power Event Tree

Basic Event Name	Description	Probability
IE-LP1	Loss of off-site power due to plant-centered or grid-related causes	8.0E-2
REC-OSP-PC	Recovery of off-site power within 24 hours	1.0E-2
HEP-DIAG-SFPLP1	Operators fail to diagnose loss of SFP cooling due to loss of off-site power	1.0E-6
HEP-FW-REP-DEPEN	Repair crew fails to repair firewater system - dependent case	5.0E-2
HEP-SFP-STR-LP1	Operators fail to restart and align the SFP cooling system once power is recovered	5.0E-6
HEP-RECG-FWSTART	Operators fail to diagnose need to start the firewater system	2.0E-5
HEP-RECG-DEPEN	Operators fail to recognize need to cool pool given prior failure	5.0E-02
HEP-FW-START	Operators fail to start firewater pump and provide alignment	1.0E-5
HEP-FW-REP-NODEP	Repair crew fails to repair firewater system	1.0E-3
SPC-PMP-CCF	SFP cooling pumps – common cause failure	5.9E-4
SPC-PMP-FTF-1	SFP cooling pump 1 fails to start and run	3.9E-3
SPC-PMP-FTF-2	SFP cooling pump 2 fails to start and run	3.9E-3
FP-2PUMPS-FTF	Failure of firewater pump system	6.7E-4
FP-DGPUMP-FTF	Failure of the diesel-driven firewater pump	1.8E-1
SPC-CKV-CCF-H	Heat exchanger discharge check valves-CCF	1.9E-5
SPC-CKV-CCF-M	SFP cooling pump discharge check valves-CCF	3.2E-5
SPC-HTX-CCF	SFP heat exchangers - CCF	1.9E-5
SPC-HTX-FTR	SFP heat exchanger cooling system fails	2.4E-4
SPC-HTX-PLG	Heat exchanger plugs	2.2E-5
SPC-PMP-CCF	SFP cooling pumps - CCF	5.9E-4

Basic Event Name	Description	Probability
SPC-PMP-FTF-1	SFP cooling pump 1 fails to start and run	3.9E-3
SPC-PMP-FTF-2	SFP cooling pump 2 fails to start and run	3.9E-3

4.4 Severe Weather Loss of Off-site Power Event Tree

This event tree represents the loss of SFP cooling resulting from a loss of off-site power from severe-weather-related events. Until off-site power is recovered, the electrical pumps would be unavailable, and only the diesel fire pump would be available to provide make-up.

Figure 4.4 shows the Severe Weather Loss of Off-site Power (LOSP) event tree sequence progression.

4.4.1 Initiating Event LP2 – Severe Weather Loss of Off-site Power

4.4.1.1 Event Description

Initiating event IE-LP2 represents severe-weather-related losses of off-site power. Severe weather threatens the safe operation of a SFP facility by simultaneously causing loss of off-site power and potentially draining regional resources or limiting their access to the facility. This event tree also differs from the plant-centered and grid-related LOSP event tree in that the probability of off-site power recovery is reduced.

4.4.1.2 Quantification

The LOSP frequency from severe weather events is 1.1E-2/yr, taken from NUREG/CR-5496 (Ref. 16). This includes contributions from hurricanes, snow and wind, ice, wind and salt, wind, and one tornado event, all of which occurred at a relatively small number of plants. Therefore, for the majority of sites, this frequency is conservative, whereas, for a few sites it is non-conservative. Because of their potential for severe localized damage, tornados were analyzed separately in Appendix 2e.

4.4.2 Top Event OPR – Off-site Power Recovery

4.4.2.1 Event Description and Timing

The fault tree for this top event (LP2-OPR) is a single basic event that represents the non-recovery probability of off-site power. It is assumed that if power is recovered before boil-off starts (33 hours), the operator has a chance to reestablish cooling using the SFP cooling system.

4.4.2.2 Relevant Assumptions

- See section 4.4.2.3 below.

4.4.2.3 Quantification

September 5, 2000 (1:54PM)

Non-HEP Probability

NUREG-1032 (Ref. 17) classified LOSP events into plant-centered, grid-related, and severe-weather-related categories, because these categories involved different mechanisms and also seemed to have different recovery times. Similarly, NUREG/CE-5496 divides LOSP events into three categories and estimates different values of non-recovery as functions of time. A non-recovery probability within 24 hrs for the off-site power from the severe weather event was estimated to be 2.0E-2 to <1.0E-4 depending on the location of the plant. In the operating plant, recovery of off-site power may be very efficient due to presence of skilled electricians. In the decommissioned plant, the skilled electricians may not be present at the site. Therefore, for the purpose of this analysis, a non-recovery probability for off-site power due to severe weather event (REC-OSP-SW) of 2.0E-2 is used.

4.4.2.4 Basic Event Probability

Basic Event	Basic Event Probability
REC-OSP-SW	2.0E-2

4.4.3 Top Event OCS – Cooling System Restart and Run

4.4.3.1 Event Description and Timing

This top event represents restarting the SFP cooling system, given that off-site power has been recovered within 24 hours. There are two electrically operated pumps and the operator can start either one. If the operator starts the pump that was in operation, no valve alignment would be required. However, if operator starts the standby pump, some valve alignment may be required.

Fault tree LP2-OCS has several basic events: an event representing failure of the operators to realize they need to start the spent fuel pool cooling system, an operator action representing the failure to establish SFP cooling, and several hardware failures of the system. If power is recovered within 24 hours, the operator has 9 hours to start the system before boil-off starts. If he fails to initiate SFP cooling before boil-off begins, the operator must start a firewater pump to provide make-up.

September 5, 2000 (1:54PM)

Figure 4.4 Severe weather related loss of off-site power event tree

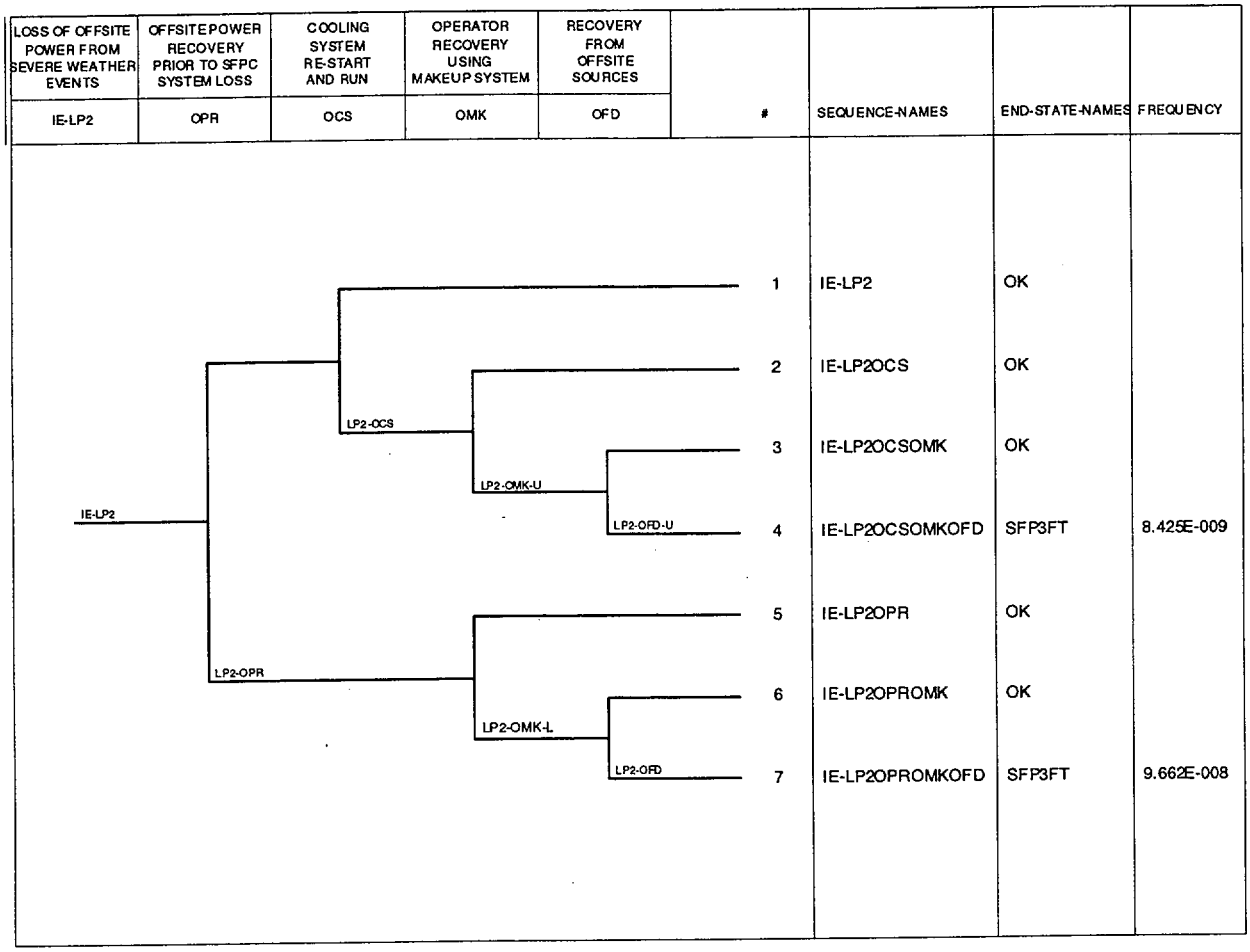

4.4.3.2 Relevant Assumptions

- The operators have 9 hours to start the SFP cooling system before boil-off starts.
- Operators have received formal training and there are procedures to guide them (NEI commitment no. 2).

4.4.3.3 Quantification

Human Error Probabilities

HEP-DIAG-SFPLP2 represents failure of the operator to recognize the loss of SFP cooling. Success could result from recognition that the electric pumps stop running once power is lost and require restart following recovery of power. If the operator fails to make an early diagnosis of loss of SFP cooling, then success could still be achieved during walk-downs following the loss of off-site power. Alternatively, if power is restored, the operator will have alarms available as well. Therefore this value consists of two errors. The diagnosis error was calculated using SPAR, and the walkdown error was calculated using THERP. The relevant performance shaping factors included greater than 24 hours for diagnosis, extreme stress, moderately complex task (due to potential complications from severe weather), diagnostic procedures, and good work processes. A low dependence was applied to the walk-down error.

Event HEP-SFP-STR-LP2 represents operator failure to restart/realign the SFP cooling system in 9 hours. The operators can restart the previously running pump and may not have to make any valve alignment. If they decide to restart the standby pump they may have to make some valve alignment. This error was quantified using SPAR. The relevant performance shaping factors included expansive time, extreme stress due to severe weather, moderately complex task due to potential valve lineups and severe weather, poor ergonomics due to severe weather, and good work process.

If the system fails to start and run for a few hours then the operators would try to get the system repaired. Assuming that it takes another two shifts (16 hours) to contact maintenance personnel, make a diagnosis, and get new parts, and assuming an average repair time of 10 hours, there is not sufficient time to fix the system. Therefore, no credit was given for repair of the SFP cooling system.

Non-HEP Probabilities

Fault tree LP2-OCS represents failure of the SFP cooling system to restart and run. Hardware failure rates have been taken from INEL-96/0334. It is assumed that the SFPC system will be maintained since it is required to be running all the time.

4.4.3.4 Basic Event Probabilities

Basic Event	Basic Event Probability
HEP-DIAG-SFPLP2	1.0E-5
HEP-SFP-STR-LP2	5.0E-4

Basic Event	Basic Event Probability
SPC-CKV-CCF-H	1.9E-5
SPC-CKV-CCF-M	3.2E-5
SPC-HTX-CCF	1.9E-5
SPC-HTX-FTR	2.4E-4
SPC-HTX-PLG	2.2E-5
SPC-PMP-CCF	5.9E-4
SPC-PMP-FTF-1	3.9E-3
SPC-PMP-FTF-2	3.9E-3

4.4.4 Top Event OMK – Operator Recovery Using Make-up Systems

4.4.4.1 Event Description and Timing

This top event represents the failure probability of the firewater pumps. If off-site power is recovered then the fault tree LP2-OMK-U represents this top event. In this case, the operators have both electric and diesel firewater pumps available. If off-site power is not recovered then fault tree LP2-OMK-L represents this top event. In this case, the operator has only the diesel firewater pump available.

4.4.4.2 Relevant Assumptions

- It is assumed that the procedures guide the operators to wait until it is clear that spent fuel pool cooling cannot be reestablished (e.g., using cues such as the level drops to below the suction of the cooling system or the pool begins boiling) before using alternate make-up sources. Therefore, they have 88 hours to start a firewater pump.

- Because of the severe weather, if one or both pumps fail to start or run, it is assumed that it takes another four to five shifts (48 hours) to contact maintenance personnel, perform the diagnosis, and get new parts. Therefore, the operator would have 40 hours (88 hours less 48 hours) to perform repairs.

- There is a means to remotely align a make-up source to the spent fuel pool without entry to the refuel floor, so that make-up can be provided even when the environment is uninhabitable due to steam and/or high radiation (NEI commitment no.8).

- Repair crew is different than on-site operators.

- Repair crew will focus his recovery efforts on only one pump

- On average, it takes 10 hours to repair a pump if it fails to start and run.

- Both firewater pumps are located in a separate structure or protected from the potential

harsh environment in case of pool bulk boiling.

- Maintenance is performed per schedule on diesel and electric firewater pumps to maintain operable status.

- Operators haves received formal training on relevant procedures.

4.4.4.3 Quantification

Human Error Probabilities

The fault tree LP2-OMK-U has five operator actions, and LP2-OMK-I has three. Two of the events are common. HEP-RECG-FWST-SW represents the failure of the operator to recognize the need to initiate firewater as an inventory make-up system. This event was quantified using the SPAR HRA technique. The assumptions included expansive time (> 24 hours), extreme stress, highly trained staff, diagnostic type procedures, and good quality of work process. This diagnosis task provides the diagnosis for the subsequent actions taken to re-establish cooling to the pool.

HEP-FW-START-SW represents failure to start either the electric or diesel firewater pump (depending upon availability) within 88 hours after the onset of bulk boiling, given that the decision to start a firewater pump was made. No difficult valve alignment is required, but the operator may have to run the fire hoses to designated valve stations. This event was quantified using the SPAR HRA technique. The PSFs chosen were; expansive time (> 50 times the required time), high stress, highly complex task because of the multiple steps and severe weather and its non-routine nature, quality procedures, poor ergonomics due to severe weather, and finally a crew who had executed these tasks before, conversant with the procedures and one another.

HEP-FW-REP-NODSW represents the failure of the repair crew to repair a firewater pump for the scenario where power is not recovered. Note that we have assumed that since power is not recovered, the repair crew did not make any attempt to repair the SFPC system, and therefore no dependency was modeled in the failure to repair the firewater system. We assume that the operator will focus his recovery efforts on only one pump. Assuming that it takes two days (48 hours) before technical help and parts arrive, then the operator has 40 hours (88 hours less 48 hours) to repair the pump. Assuming a 10-hour mean time to repair, the probability of failure to repair the pump would be Exp [-(1/10) (40)] ≈ 1.8E-2. This event is modeled in the fault tree, LP2-OMK-L.

HEP-FW-REP-DEPSW represents the failure of the repair crew to repair a firewater pump for the scenario where power is recovered. Note that repair was not credited for top event OCS; however, we have assumed that the repair crew did make an attempt to restore the SFPC system, and so dependency was modeled in the failure to repair the firewater system. For HEP-FW-REP-DEPSW a low level of dependence was applied modifying the failure rate of 2.5E-2 to 7.0E-2 using the THERP formulation for low dependence.

In addition, in fault tree LP2-OMK-U, the possibility that no action is taken has been included by incorporating an OR gate with basic events HEP-DIAG-SFPLP2 and HEP-RECG-DEPEN. The latter is quantified on the assumption of a low dependency.

Non-HEP Probabilities

In the case of LP2-OMK-U, both firewater pumps are available. Failure of both firewater pumps is represented by basic event FP-2PUMPS-FTF.

In the case of LP2-OMK-L, only the diesel-driven firewater pump is available, and its failure is represented by basic event FP-DGPUMP-FTF.

The pump may be required to run 8 to 10 hours at the most (250 gpm capacity), given that the water inventory drops by 20 ft (i.e., 3 ft above the top of the fuel). A failure probability of 3.7E-3 for failure to start and run for the electric pump and 0.18 for the diesel driven pump are used from INEL-96/0334. These individual pump failures result in a value of 0.18 for event FP-DGPUMP-FTF and 6.7E-4 for event FP-2PUMPS-FTF.

The dependency between make-up water supply (e.g., fragility of the fire water supply tank) to events that may have caused the loss of off-site power (such as high winds) is assumed to be bounded by the dependency modeled in the HEPs.

4.4.4.4 Basic Event Probabilities

Basic Event	Basic Event Probability
HEP-RECG-FWST-SW	1.0E-4
HEP-RECG-DEPEN	5.0E-2
HEP-FW-START-SW	1.0E-3
HEP-FW-REP-DEPSW	7.0E-2
HEP-FW-REP-NODSW	1.8E-2
FP-2PUMPS-FTF	6.7E-4
FP-DGPUMP-FTF	1.8E-1

4.4.5 Top Event OFD – Operator Recovery Using Off-site Sources

4.4.5.1 Event Description and Timing

Given the failure of recovery actions using on-site sources, this event accounts for recovery of coolant make-up using off-site sources such as procurement of a fire engine. Adequate time is available for this action, provided that the operator recognizes that recovery of cooling using on-site sources will not be successful, and that off-site sources are the only viable alternatives. Fault tree LP2-OFD represents this top event for the lower branch (off-site power not recovered), and LP2-OFD-U for the upper branch. These fault trees contain those basic events from the fault trees LP2-OMK-U and LP2-OMK-L that relate to recognition of the need to initiate the firewater system; if OMK fails because the operator failed to recognize the need for firewater make-up, then it is assumed that the operator will fail here for the same reason.

4.4.5.2 Relevant Assumptions

- The operators have 88 hours to provide make-up and inventory cooling.
- Procedures and training are in place that ensure that off-site resources can be brought to bear (NEI commitment no. 2, 3 and 4), and that preparation for this contingency is made when it is realized that it may be necessary to supplement the pool make-up.
- Procedure explicitly states that if the water level drops below a certain level (e.g., 15 ft below normal level) operator must initiate recovery using off-site sources.
- Off-site resources are familiar with the facility.

4.4.5.3 Quantification

Human Error Probability

The event HEP-INV-OFFST-SW represents failure to take the extreme measure of using off-site sources, given that even though there has been ample time up to this point to attempt recovery of both the SFP cooling system and both firewater pumps it has not been successful. This top event includes failures of both the diagnosis of the need to provide inventory from off-site sources, and the action itself. The contribution from the failure to diagnose is assessed by assuming a low level of dependence to account for the possible detrimental effects of the failure to complete prior tasks successfully. A relatively low contribution of 3E-02 is assumed for failure to complete the task, based on the fact that there are between five and six days for recovery of the infrastructure following a severe weather event. This results in a total HEP of 8E-02. NEI commitments 3 and 4 provide a basis for this relatively low number.

4.4.5.4 Basic Event Probability

Basic Event	Basic Event Probability
HEP-INV-OFFST-SW	8.0E-2

4.4.6 Summary

Table 4.4 presents a summary of basic events used in the event tree for Loss of Off-site Power from severe weather events.

As in the case of the loss of off-site power from plant centered and grid related events, based on the assumptions made, the frequency of fuel uncovery can be seen to be very low. Again, a careful and thorough adherence to NEI commitments 2, 5, 8 and 10, the assumption that walk-downs are performed on a regular, (once per shift) basis is important to compensate for potential failures to the instrumentation monitoring the status of the pool, the assumption that the procedures and/or training are explicit in giving guidance on the capability of the fuel pool make-up system, and when it becomes essential to supplement with alternate higher volume sources, the assumption that the procedures and training are sufficiently clear in giving guidance on early preparation for using the alternate make-up sources, are crucial to establishing the low frequency. NEI commitment 3, related to establishing communication

between on-site and off-site organizations during severe weather, is also important, though its importance is somewhat obscured by the assumption of dependence between the events OMK and OFD. However, if no such provision were made, the availability of off-site resources could become more limiting.

Table 4.4 Basic Event Summary for Severe Weather Loss of Off-site Power Event Tree

Basic Event Name	Description	Basic Event Probability
IE-LP2	LOSP event due to severe-weather-related causes	1.1E-02
HEP-DIAG-SFPLP2	Operators fail to diagnose loss of SFP cooling due to loss of off-site power	1.0E-5
HEP-RECG-DEPEN	Failure to recognize need to cool pool given prior failure	5.0E-2
HEP-SFP-STR-LP2	Operators fail to restart and align the SFP cooling system once power is recovered	5.0E-4
HEP-RECG-FWST-SW	Operators fail to diagnose need to start the firewater system	1.0E-4
HEP-FW-START-SW	Operators fail to start firewater pump and provide alignment	1.0E-3
HEP-FW-REP-DEPSW	Repair crew fails to repair firewater system	7.0E-2
HEP-FW-REP-NODSW	Repair crew fails to repair firewater system	1.8E-2
HEP-INV-OFFST-SW	Operators fail to provide alternate sources of cooling from off-site	8.0E-2
REC-OSP-SW	Recovery of off-site power within 24 hours	2.0E-2
SPC-CKV-CCF-H	Heat exchanger discharge check valves – CCF	1.9E-5
SPC-CKV-CCF-M	SFP cooling pump discharge check valves - CCF	3.2E-5
SPC-HTX-CCF	SFP heat exchangers – CCF	1.9E-5
SPC-HTX-FTR	SFP heat exchanger cooling system fails	2.4E-4
SPC-HTX-PLG	Heat exchanger plugs	2.2E-5

Basic Event Name	Description	Basic Event Probability
SPC-PMP-CCF	SFP cooling pumps – common cause failure	5.9E-4
SPC-PMP-FTF-1	SFP cooling pump 1 fails to start and run	3.9E-3
SPC-PMP-FTF-2	SFP cooling pump 2 fails to start and run	3.9E-3
FP-2PUMPS-FTF	Failure of firewater pump system	6.7E-4
FP-DGPUMP-FTF	Failure of the diesel-driven firewater pump	1.8E-1

4.5 Loss of Inventory Event Tree

This event tree (Figure 4.5) models general loss of inventory events, that are not the result of catastrophic failures that could result from events such as dropped loads, tornado missiles, or seismic events. The following assumption was made in the development of the event tree.

- Maximum depth of siphon path is assumed to be 15 ft. below the normal pool water level (related to NEI commitments 6 and 7). Once the water level drops 15 ft below the normal pool water level, the losses would be only from the boil-off. This assumption may be significant, and potentially non-conservative for sites that do not adopt NEI commitments 6 and 7.

4.5.1 Initiating Event LOI – Loss of Inventory

4.5.1.1 Event Description and Timing

This initiator (IE–LOI) includes loss of coolant inventory from events such as those resulting from configuration control errors, siphoning, piping failures, and gate and seal failures. Operational data provided in NUREG-1275 (Ref. 12), show that the frequency of loss of inventory events in which the level decreased more than one foot can be estimated to be less than one event per 100 reactor years. Most of these events were the result of operator error and were recoverable. NUREG-1275 shows that, except for one event that lasted for 72 hours, there were no events that lasted more than 24 hours. Eight events resulted in a level decrease of between one and five feet and another two events resulted in an inventory loss of between five and 10 feet.

4.5.1.2 Relevant Assumption

- NEI commitments 6 and 7 will reduce the likelihood of a significant initiating event.

4.5.1.3 Quantification

The data reviewed during the development of NUREG-1275 (Ref. 12) indicated fewer than one event per 100 years in which level decreased over one foot. This would give a frequency of 1E-02. However, it is assumed that the NEI commitments 6 and 7 when implemented will reduce this frequency by an order of magnitude or more. Thus the frequency is estimated as 1E-03 per year.

4.5.2 Top Event NLL – Loss Exceeds Normal Make-up Capacity

4.5.2.1 Event Description and Timing

This phenomenological event divides the losses of inventory into two categories: those for which the leak size exceeds the capacity of the SFP make-up and therefore require isolation of the leak, and those for which the SFP make-up system's capacity is sufficient to prevent fuel uncovery without isolation of the leak.

4.5.2.2 Relevant Assumptions

- In the case of a large leak, a leak rate is assumed to be twice the capacity of the SFP make-up system, i.e., 60 gpm. Although a range of leak rates is possible, the larger leak rates are postulated to be from failures in gates, seals, or from large siphoning events, and NEI commitments 6 and 7 will go a considerable way toward minimizing these events.

- The small leak is assumed for analysis purposes to be at the limit of the make-up system capacity, i.e., 30 gpm.

4.5.2.3 Quantification

<u>Non-HEP Probabilities</u>

This top event is quantified by a single basic event, LOI-LGLK. From Table 3.2 of NUREG-1275, there were 38 events that lead to a loss of pool inventory. If we do not consider the load drop event (because this is treated separately), we have 37 events. Of these, 2 events involved level drops greater than 5 feet. Therefore, a probability of large leak event would be $2/37 \approx 0.06$ (6%). For the other 94% of the cases, operation of the make-up pump is sufficient to prevent fuel uncovery.

September 5, 2000 (1:54PM)

Figure 4.5 Loss of inventory event tree

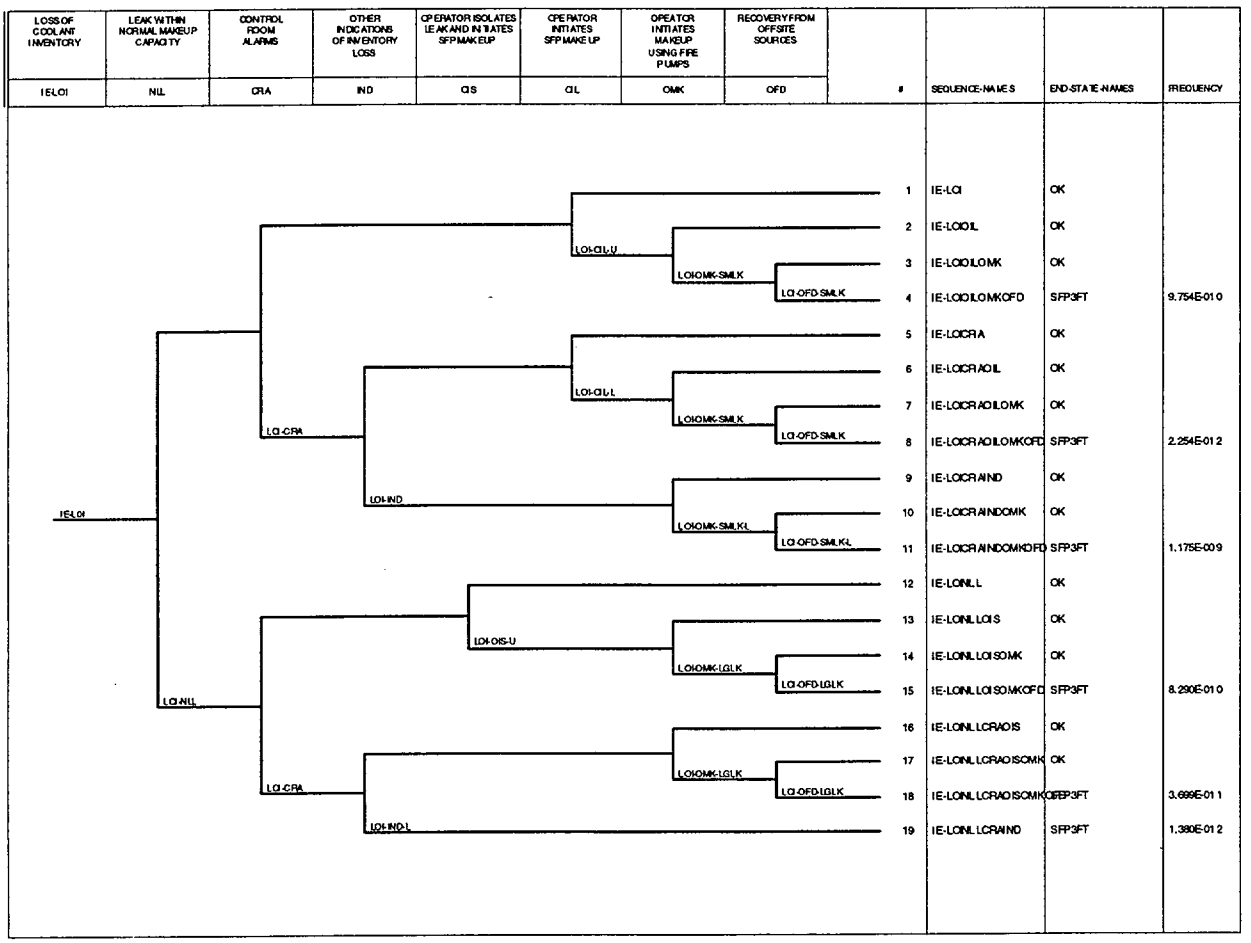

4.5.3 Top Event CRA – Control Room Alarms

4.5.3.1 Event description and Timing

This top event represents the failure of the control room operators to respond to the initial loss of inventory from the spent fuel pool. This top event is represented by fault tree LOI-CRA. Depending on the leak size, the timings for the water level to drop below the level alarm set point (assumed 1 ft below the normal level) would vary. It is estimated that water level would drop below the low-level alarm set point in about 4 hours in the case of a small leak and in the case of a large leak, it would take 1 to 2 hours. Failure to respond could be due to operator failure to respond to an alarm, or loss of instrumentation system. Success for this event is defined as the operators recognizing the alarm as indicating a loss of inventory.

4.5.3.2 Relevant Assumptions

- Regular test and maintenance is performed on instrumentation (NEI commitment no. 10).
- Procedures are available to guide the operators on response to off-normal conditions, and the operators are trained on the use of these procedures (NEI commitment no. 2).
- System drawings are revised as needed to reflect current plant configuration.
- SFP water level indicator is provided in the control room (NEI commitment no. 5).
- SFP low-water level alarm (narrow range) is provided in the control room (NEI commitment no. 5).
- Low level alarm set point is set to one foot below the normal level.

4.5.3.3 Quantification

<u>Human Error Probabilities</u>

One operator error, HEP-DIAG-ALARM is modeled under this top event. This event represents operator failure to respond after receiving a low-level alarm. Success is defined as the operator investigating the alarm and identifying the cause. This failure was quantified using The Technique for Human Error Prediction (THERP) Table 20-23. No distinction is made between the two leak sizes because this is treated as a simple annunciator response.

<u>Non-HEP Probabilities</u>

The value used for local faults leading to alarm channel failure, SPC-LVL-LOP (2.0E-3), was estimated based on information in NUREG-1275, Volume 12. This includes both local electrical faults and instrumentation faults.

4.5.3.4 Basic Event Probabilities

Basic Event	Basic Event Probability
HEP-DIAG-ALARM	3.0E-4
SPC-LVL-LOP	2.0E-3

4.5.4 Top Event IND – Other Indications of Inventory Loss

4.5.4.1 Event Description and Timing

This top event models operator failure to recognize the loss of inventory during walk-downs over subsequent shifts. Indications available to the operators include read-outs in the control room, and a visibly decreasing water level. Eventually, when pool cooling is lost the environment would become noticeably hot and humid. Success for this event, in the context of the event tree, is treated differently for the small and large leaks.

For the small leak, it is defined as the operator recognizing the abnormal condition and understanding its cause in sufficient time to allow actions to prevent pool cooling from being lost. Failure of this top event does not lead to fuel uncovery. This top event is represented by the functional fault tree LOI-IND. Following an alarm, the operators would have in excess of 8 hours before the water level would drop below the SFP cooling suction level. Therefore, for this event, only one shift is credited for recognition.

For the large leak, success is defined as recognizing there is a leak in sufficient time to allow make-up from alternate sources (fire water and off-site sources) before fuel uncovery. This top event is represented by the basic event LOI-IND-L. Based on the success criterion, there are many more opportunities for successive crews to recognize the need to take action. If the leakage is in the SFP cooling system, the leak would be isolated automatically once the water level drops below the SFP suction level. In this case, it would take more than 88 hrs (heatup plus boil-off) for the water level to reach 3 ft above the top fuel and the event would be similar to loss of spent fuel pool cooling. For the purpose of this analysis, it is assumed that leakage path is assumed to be below SFP cooling system suction level. It is assumed that once the water level drops 15 ft below normal pool level the leak is isolated automatically, and the inventory losses would be only due to boil-off. Time needed to boil-off to 3 ft above the top fuel is estimated to be 25 hours. Therefore, depending on the size of the leak and location and heatup rate, the total time available for operator actions after the first alarm before the water level drops below the SFP suction level to the 3 ft above the top of fuel would be more than 40 hrs. Furthermore, the indications become increasingly more compelling; with a large leak it would be expected that the water would be clearly visible, the level in the pool is obviously decreasing, and as the pool boils the environment in the pool area becomes increasingly hot and humid. Because of these very obvious physical changes, no dependence is assumed between the event IND and the event CRA. This lack of dependence is however, contingent on the fact that the operating crews perform walk-downs on a regular basis.

4.5.4.2 Relevant assumptions

- Operators have more than 40 hrs in the case of a large leak to take actions after the first alarm before the water level drops to the 3 ft above the top of fuel.
- SFP water level indicator is provided in the control room e.g., camera or digital readout.

- SFP low-water level alarm (narrow range) is provided in the control room.
- System drawings are revised as needed to reflect current plant configuration.
- Procedure/guidance exist for the operators to recognize and respond to indications of loss of inventory, and they are trained in the use of these procedures (NEI commitment no. 2).
- Water level measurement stick with clear marking is installed in the pool at a location that is easy to observe
- Operators are required to make a round per shift and document walk-downs in a log
- Training plans are revised as needed to reflect the changes in equipment configuration as they occur

4.5.4.3 Quantification

Human Error Probabilities

The top event LOI-IND, for small leaks, includes two HEPs, depending on whether the control room alarms have failed, or the operators failed to respond to the alarms. If the operators failed to respond to control room alarms, then event HEP-WLKDWN-DEPEN models the failure of the next shift to recognize the loss of cooling during a walkdown or during a control room review, taking into account a potential dependence on event HEP-DIAG-ALARM. A low dependence is assumed. If the alarms failed, then event HEP-WLKDWN-LOI models operator's failure to recognize the loss of inventory during walk-downs, with no dependence on previous HEPs. Because only one crew is credited, the HEP is estimated as 5E-03.

This failure probability is developed using THERP, and is based upon three individual failures: failure to carry out an inspection, missing a step in a written procedure, and misreading a measuring device.

The top event LOI-IND-L is modeled taking into account several opportunities for recovery by consecutive crews, and because the indications are so compelling no dependency is assumed between this HEP and the prior event.

4.5.4.4 Basic Event Probabilities

Basic Event	Basic Event Probability
HEP-WLKDWN-DEPEN	5.0E-2
HEP-WLKDWN-LOI-L	1.0E-5
HEP-WLKDWN-LOI	5.0E-3

4.5.5 Top Event OIS – Operator Isolates Leak and Initiates SFP Make-up

4.5.5.1 Event Description and Timing

This top event represents the operator's failure to isolate a large leak and initiate the SFP make-up system before the pool level drops below the SFP cooling system suction, and is represented by the fault tree LOI-OIS-U. Failure requires that the operators must provide the inventory using the firewater system or off-site resources.

The critical action is the isolation of the leak. With the leak size assumed, and on the assumption that the low level alarm is set at 1 foot below the normal level, the operators have 4 hours to isolate the leak. Once the leak has been isolated, there would be considerable time available to initiate the normal make-up, since pool heat up to the point of initiation of boiling takes several hours.

If the loss of inventory is discovered through walk-downs, it is assumed that there is not enough time available to isolate the leak in time to provide for SFP make-up system success, and this event does not appear on the failure branch of event CRA.

4.5.5.2 Relevant Assumptions

- System drawings are kept up to date and training plans are revised as needed to reflect changes in plant configuration.
- With an assumed leak rate of 60 gpm, the operator has in excess of 4 hrs to isolate the leak and provide make-up.
- There are procedures to guide the operators in how to deal with loss of inventory, and the operators are trained in their use (NEI commitment no. 2).
- Spent fuel pool operations that have the potential to rapidly drain the pool will be under strict administrative controls (NEI commitment no. 9). This increases the likelihood of the operators successfully terminating a leak should one occur.

4.5.5.3 Quantification

<u>Human Error Probabilities</u>

Two human failure events are included in the functional fault tree LOI-OIS-U, one for failure to start the SFP make-up pump, HEP-MKUP-START-E, and one for failure to successfully isolate the leak, HEP-LEAK-ISO.

SPAR HRA worksheets were used to quantify each of these errors. For HEP-MKUP-START-E, it was assumed that the operator is experiencing a high stress level, he is highly trained, the equipment associated with the task is well labeled and matched to a quality procedure, and the crew has effective interactions in a quality facility.

For HEP-LEAK-ISO, it was assumed that the operators would be experiencing a high level of stress, the task is highly complex due to the fact that it is necessary to identify the source of the

leak and it may be difficult to isolate, the operators are highly trained, have all the equipment available, and all components are well labeled and correspond to a procedure, and the crew has effective interactions in a quality facility.

Hardware Failure Probabilities

Unavailability of a SFP make-up system, SFP-REGMKUP-F, was assigned a value of 5.0E-2 from INEL-96/0334. It is assumed that the SFP make-up system is maintained since it is required often to provide make-up.

4.5.5.4 Basic Event Probabilities

Basic Event	Basic Event Probability
HEP-LEAK-ISO	1.3E-3
HEP-MKUP-START-E	2.5E-4
SFP-REGMKUP-F	5.0E-2

4.5.6 Top Event OIL – Operator Initiates SFP Make-up System

4.5.6.1 Event Description and Timing

This top event represents the failure to initiate the SFP make-up system in time to prevent loss of spent fuel pool cooling, for a small leak. This top event is represented by the fault trees LOI-OIL-U and LOI-OIL-L, which include contributions from operator error and hardware failure. The leak is small enough that isolation is not required for success. If the operators respond to the initiator early (i.e., CRA is successful), they would have more than 8 hours to terminate the event using the SFP make-up system before the water level drops below the SFP suction level. If operators respond late (i.e., IND success), it is assumed that they would have on the order of 4 hours, based on the leak initiating at the start of one shift and the walkdown taking place at shift turnover.

4.5.6.2 Relevant Assumptions

- There are procedures to guide the operators in how to deal with loss of inventory, and the operators are trained in their use (NEI commitment no. 2).
- The manipulations required to start the make-up system can be achieved in less than 10 minutes.

4.5.6.3 Quantification

Human Error Probabilities

In the case of an early response, the operator would have more than 8 hours available to establish SFP make-up and the failure is represented by the basic event HEP-MKUP-START (see fault tree L OI-OIL-U). In the case of a late response, the operator is assumed to have 4 hours available to establish SFP make-up and is represented by the basic event HEP-MKUP-START-E (see fault tree L OI-OIL-L). Success is defined as the operator starting the make-up pump and performing valve manipulation as needed.

SPAR HRA worksheets were used to quantify each of these errors. For HEP-MKUP-START it was assumed that the 8 hour time window will allow more than 50 times the time required to complete this task, the operators are under high stress, are highly trained, have equipment that is well labeled and matched to a procedure, and the crew has effective interactions in a quality facility. For HEP-MKUP-START-E, the time available is not as extensive, and is considered nominal, all other PSFs being equal.

Hardware Failure Probabilities

Unavailability of a SFP make-up system, SFP-REGMKUP-F, was assigned a value of 5.0E-2, using the estimate from INEL-96/0334. It is assumed that the SFP make-up system is maintained since it is required often to provide make-up.

4.5.6.4 Basic Event Proababilities

Basic Event	Basic Event Probability
HEP-MKUP-START-E	2.5E-4
HEP-MKUP-START	2.5E-6
SFP-REGMKUP-F	5.0E-2

4.5.7 Top Event OMK – Operator Initiates Make-up Using Fire Pumps

4.5.7.1 Event Description and Timing

This top event represents failure to provide make-up using the firewater pumps. The case of a large leak is represented by a fault tree LOI-OMK-LGLK. In this case the operators have 40 hours to start a firewater system. The case of a small leak is represented by two functional fault trees, LOI-OMK-SMLK, and LOI-OMK-SMLK-L. The difference between the two trees is that in the first, the operators are aware of the problem and are attempting to solve it, whereas in the second, the operators will need to first recognize the problem. In both small leak cases, the operator has more than 65 hrs to start a firewater system. In all cases neither of the firewater pumps would be initially unavailable.

4.5.7.2 Relevant Assumptions

- The operators have 40 to 65 hours to start a firewater pump depending on the leak size.
- There is a means to remotely align a make-up source to the spent fuel pool without entry to the refuel floor so that make-up can be provided even when the environment is uninhabitable due to steam and/or high radiation (NEI commitment no.8).
- Repair crew is different than on-site operators.
- On average, it takes 10 hours to repair a pump if it fails to start and run.
- It takes 16 hours to contact maintenance personnel, make a diagnosis, and get new parts.

- Both firewater pumps are located in a separate structure and are protected from the potential harsh environment in the case of pool bulk boiling.

- Maintenance and testing are performed on diesel-driven and electric firewater pumps to maintain operable status (NEI commitment no. 10).

- There are procedures to guide the operators in how to deal with loss of inventory, and the operators are trained in their use. The guidance on when to begin addition of water from alternate sources is clear and related to a clearly identified condition, such as pool level or onset of boiling (NEI commitment no. 2).

4.5.7.3 Quantification

Human Error Probabilities

Each fault tree includes three human failure events. In the case of a functional fault tree LOI-OMK-SMLK, a basic event HEP-RECG-FWSTART represents the failure of the operator to recognize the need to initiate firewater as an inventory make-up system; a basic event HEP-FW-START represents failure to start either the electric or diesel firewater pump; and a basic event HEP-FW-REP-NODSM represents the failure of the repair crew to repair a firewater pump.

For functional fault tree LOI-OMK-SMLK-L, the basic event HEP-RECG-FWSTART is replaced by HEP-RECG-FWSTART-L. This event requires that the operators recognize that the deteriorating conditions in the spent fuel pool are due to an inventory loss. The cues will include pool heat up due to the loss of spent fuel pool cooling which should be alarmed in the control room, as well as other physical indications such as increasing temperature and humidity, and a significant loss of level. Because of the nature of the sequence, the failure to recognize the need for action will be modeled by assuming a low dependence between this event and the prior failures.

For functional fault tree LOI-OMK-LGLK, a basic event HEP-RECG-FW-LOI represents the failure of the operator to recognize the need to initiate firewater as an inventory make-up system; a basic event HEP-FW-START-LOI represents failure to start either the electric or diesel firewater pump; and a basic event HEP-FW-REP-NODLG represents the failure of the repair crew to repair a firewater pump.

SPAR HRA worksheets were also used to quantify the HEPs.

HEP-FW-START represents failure to start either the electric or diesel firewater pump (depending upon availability), given that the decision to start a firewater pump was made. No difficult valve alignment is required, but the operator may have to run hoses to designated valve stations, therefore, expansive time is assumed, with all other PSFs being the same as the other HEPs below.
For HEP-RECG-FWSTART it was assumed that extensive time is available to the operators for diagnosis, that the operators are under high stress, are highly trained, have a diagnostic procedure, have good instrumentation in the form of alarms, and are part of a crew that interacts well in a quality facility.

For HEP-RECG-FW-LOI it was assumed that extra time (>60 minutes) is available to the operators for diagnosis, that the operators are under high stress, are highly trained, have a diagnostic procedure, have good instrumentation in the form of alarms, and are part of a crew that interacts well in a quality facility.

For HEP-FW-START-LOI it was assumed that the operators are under high stress, are engaged in a highly complex task due to its non-routine nature, have a high level of training, have a diagnostic procedure, and are a part of a crew that interacts well in a quality facility.

Basic event HEP-FW-REP-NODS (see fault tree, OIL-OMK-SMLKL) represents the failure of the repair crew to repair a firewater pump for the small leak scenarios. Note that repairing the SFP regular make-up system is not modeled, as there would not be enough time to get help before the SFP make-up would be ineffectual and therefore no dependency was modeled in the failure to repair the firewater system. It is assumed that the operators will focus their recovery efforts on only one pump. Assuming that it takes another 16 hours before technical help and parts arrive, the operators have about 49 hours (65 hours less 16 hours) to repair the pump. Therefore, assuming a 10-hour mean time to repair, the probability of failure to repair the pump would be Exp (-(1/10) * 49) = 7.5E-3 in the case of a small break scenario.

Basic event HEP-FW-REP-NODLG represents the failure of the repair crew to repair a firewater pump for the large leak scenarios. For this case there would only be 24 hours to repair the pump. Therefore, assuming a 10-hour mean time to repair, the probability of failure to repair the pump would be Exp (-(1/10) * 24) = 9.0E-2 in the case of a large break scenario.

Hardware Failure Probabilities

Failure of both firewater pumps is represented by basic event FP-2PUMPS-FTF. The pump may be required to run 8 to 10 hours at the most (250 gpm capacity), given that the water inventory drops by 20 ft (i.e., 3 ft from the top of the fuel). A failure probability of 3.7E-3 for failure to start and run for the electric pump and 0.18 for the diesel driven pump are used from INEL-96/0334. These individual pump failures result in a value 6.7E-4 for basic event FP-2PUMPS-FTF.

4.5.7.4 Basic Event Probabilities

Basic Event	Basic Event Probability
HEP-RECG-FWSTART	2.0E-5
HEP-RECG-FWSTART-L	5.0E-02
HEP-FW-START	1.0E-5
HEP-FW-REP-NODSM	7.5E-3
HEP-FW-REP-NODLG	9.0E-2
FP-2PUMPS-FTF	6.7E-4
HEP-RECG-FW-LOI	2.0E-4
HEP-FW-START-LOI	1.3E-3

4.5.8 Top Event OFD – Recovery From Off-site Sources

4.5.8.1 Event Description and Timing

Given the failure of recovery actions using on-site sources, this event accounts for recovery of coolant make-up using off-site sources such as procurement of a fire engine. This event is represented by the fault trees LOI-OFD-LGLK, LOI-OFD-SMLK and LOI-OFD-SMLK-L for the large break and two small break scenarios, respectively.

4.5.8.2 Relevant Assumptions

- The operator has 40 to 65 hours depending on the break size to provide make-up inventory and cooling.
- Procedure explicitly states that if the water level drops below a certain level (e.g., 15 ft below normal level) operator must initiate recovery using off-site sources.
- Operator has received formal training and there are procedures to guide him.
- Off-site resources are familiar with the facility.

4.5.8.3 Quantification

Human Error Probabilities

The only new basic events in these functional fault trees are HEP-INV-OFFST-LK and HEP-INV-OFFST. They were quantified using SPAR HRA worksheets. The diagnosis of the need to initiate the action is considered totally dependent on the recognition of the need to initiate inventory make-up with the fire water system. The PSFs are as follows: extreme stress (it's the last opportunity for success), high complexity because of the involvement of off-site personnel, highly trained staff with good procedures, good ergonomics (equipment is available to make off-site support straightforward) and good work processes. For both cases, a low level of dependence was assumed on the failure of prior tasks.

4.5.8.4 Basic Event Probabilities

Basic Event	Basic Event Probability
HEP-INV-OFFST-LK	5.0E-2
HEP-INV-OFFSITE	5.0E-2

4.5.9 Summary

Table 4.5 presents a summary of basic events.

As in the previous cases, the frequency of fuel uncovery can be seen to be very low. Again, a careful and thorough adherence to NEI commitments 2, 4, 5, 8 and 10, the assumption that walk-downs are performed on a regular, (once per shift) basis is important to compensate for potential failures to the instrumentation monitoring the status of the pool, the assumption that the procedures and/or training are explicit in giving guidance on the capability of the fuel pool make-up system, and when it becomes essential to supplement with alternate higher volume

sources, the assumption that the procedures and training are sufficiently clear in giving guidance on early preparation for using the alternate make-up sources, are crucial to establishing the low frequency. NEI commitments 6, 7 and 9 have been credited with lowering the initiating event frequency.

Table 4.5 Basic Event Summary for the Loss of Inventory Event Tree

Basic Event Name	Description	Basic Event Probability
IE-LOI	Loss of inventory initiating event	1.0E-3
HEP-DIAG-LGLK	Operators fail to respond to a signal indication in the control room (large leak)	4.0E-4
HEP-DIAG-ALARM	Operators fail to respond to a signal indication in the control room	3.0E-4
HEP-WLKDWN-LOI	Operators fail to observe the LOI/loss of cooling in walk-downs, given failure to prevent loss of SFP cooling	5.0E-3
HEP-WLKDWN-LOI-L	Operators fail to observe the LOI/loss of cooling in walk-downs (independent case)	1.0E-5
HEP-WLKDWN-DEPEN	Operators fail to observe the LOI event walk-downs (dependent case)	5.0E-2
HEP-RECG-FW-LOI	Operators fail to diagnose need to start the firewater system	2.0E-4
HEP-RECG-FWSTART	Operators fail to diagnose need to start the firewater system	2.0E-5
HEP-RECG-FWSTART-L	Operators fail to diagnose need to start the firewater system given he failed to prevent loss of SFP cooling	5.0E-2
HEP-LEAK-ISO	Operators fail to isolate leak	1.3E-3
HEP-FW-START-LOI	Fails to start firewater pumps	1.3E-3
HEP-FW-START	Operators fail to start firewater pump and provide alignment	1.0E-5
HEP-FW-REP-NODLG	Fails to repair firewater pump (20 hrs)	9.0E-2
HEP-FW-REP-NODSM	Fails to repair firewater pump (49 hrs)	7.5E-3
HEP-INV-OFFST-LK	Operators fail to recover via off-site sources	5.0E-2
HEP-INV-OFFSITE	Operators fail to provide alternate sources of cooling from off-site	5.0E-2
FP-2PUMPS-FTF	Failure of firewater pump system	6.7E-4
LOI-LGLK	Loss exceeds normal make-up	6.0E-2
HEP-MKUP-START	Operators fail to start make-up(small leak)	2.5E-6
HEP-MKUP-START-E	Operators fail to start make-up(Early Respond)	2.5E-4
HEP-MKUP-START-L	Operators fail to start make-up(Late Respond)	1.0
SFP-REGMKUP-F	Regular SFP make-up system fails	5.0E-2
SPC-LVL-LOP	Electrical faults leading to alarm channel failure	2.0E-3

5.0 Summary of Results

The results of this analysis provide insight into the risks associated with storage of spent

nuclear fuel in fuel pools at decommissioned nuclear power plants. The five accident initiators that were analyzed consist of: 1) internal fires, 2) loss of cooling, 3) loss of inventory, 4) plant/grid centered losses of off-site power, and 5) severe weather induced losses of off-site power. The total frequency for the endstate is estimated to be 1.8E-7/year. Table 5.1 summarizes the fuel uncovery frequency for each initiator.

This frequency is to be compared with the pool performance guideline (PPG). This guideline has been established by analogy with the acceptance guidelines in RG. 1.174. In RG 1.174 it was determined that the mean value of the distribution characterizing uncertainty is the appropriate value to compare the guideline. However, it was determined that it is also necessary to investigate whether there are modeling uncertainties that could affect the decision made with respect to whether the guidelines have been met. This is the approach that has been followed here.

5.1 Characterization of Uncertainty

The frequencies are point estimates, based on the use of point estimates for the input parameters. The input parameter values were taken from a variety of sources, and in many cases were presented as point estimates with no characterization of uncertainty. In some cases, such as the initiating event frequencies derived from NUREG/CR 5496, and the HEPs derived from THERP, an uncertainty characterization was given, and the point estimates chosen corresponded to the mean values of the distributions characterizing uncertainty. For all other parameters, it was assumed that the values would be the mean values of distributions characterizing the uncertainty of the parameter value. In the case of SPAR HEPs, the authors of the SPAR HRA approach consider their estimates as mean values based on the fact that the numbers were established on the basis of considering several different sources, most of which specified mean values. Consequently, the results of this analysis are interpreted as being mean values. A propagation of parameter uncertainty through the model was not performed, nor was it considered necessary. With the exception of the spent fuel pool cooling system itself, the systems relied on are single train systems. The dominant failure contributions for the spent fuel pool cooling system are assumed to be common cause failures. Thus there are no dominant cutsets in the solutions that involved multiple repetitions of the same parameter, and under these conditions, use of mean values as input parameters produces a very close approximation to mean values of sequence frequencies. Since typical uncertainty characterization for the input parameters is a lognormal distribution with error factors of 3 or 10, the 95th percentile of the output distribution will be no more than a factor of three higher than the mean value. This is not significant to change the conclusion of the analysis.

The numerical results are a function of the assumptions made and in particular, the model used to evaluate the human error probabilities. The staff believes the models used are appropriate for the purpose of this analysis, and in particular are capable of incorporating the relevant performance shaping factors to demonstrate that low levels of risk are achievable, given an appropriate level of attention to managing the facility with a view to ensuring the health and safety of the public. Alternate HRA models could result in frequencies that are different. However, given the time scales involved, and the simplicity of the systems, we believe that the conclusions of this study, namely that, when the NEI commitments are appropriately implemented the risks are low, are robust.

Certain assumptions may be identified as having the potential for significantly influencing the results. For example, the calculated time windows associated with the loss of inventory event tree are sensitive to the assumptions about the leak size. The SPAR HRA method is, however, not highly sensitive to the time windows assumed, primarily making a distinction between time windows that represent an inadequate time, barely adequate, nominal, extra time, and expansive time. The precise definitions of these terms can be found in Reference 9. Consequently, the assumption of the large leak rate as 60 gpm is not critical. For the loss of inventory event tree, the assumption that the leak is self-limiting after a drop in level of 15 feet, may be a more significant assumption that, on a site specific basis may be non-conservative, and requires validation. The assumption that the preparation time of several days is adequate to bring off-site sources to bear may be questioned in the case of extreme conditions. However, the very conservative assumption that this is guaranteed to fail would change the corresponding event sequences by about an order of magnitude, which would still be a very low risk contributor.

5.2 Conclusions

The analysis shows that, based on the assumptions made, the frequency of fuel uncovery from the loss of cooling, loss of inventory, loss of off-site power and fire initiating events is very low. The assumptions that have been made include that the licensee has adhered to NEI commitments 2, 4, 5, 8 and 10. In order to take full credit for these commitments, additional assumptions concerning how these commitments will be implemented have been made. These include: procedures and/or training are explicit in giving guidance on the capability of the fuel pool make-up system, and when it becomes essential to supplement with alternate higher volume sources; procedures and training are sufficiently clear in giving guidance on early preparation for using the alternate make-up sources; walk-downs are performed on a regular, (once per shift) basis. The latter is important to compensate for potential failures to the instrumentation monitoring the status of the pool.

NEI commitment 3, related to establishing communication between on-site and off-site organizations during severe weather, is also important, though its importance is somewhat obscured in the analysis by the assumption that there is some degree of dependence between the decision to implement supplemental make-up to the spent fuel pool from on-site sources such as fire water pumps, and that from off-site sources. However, if no such provision were made, the availability of off-site resources could become more limiting.

NEI commitments 6, 7 and 9 have been credited with lowering the initiating event frequency for the loss of inventory events from its historical levels.

This analysis has, demonstrated to the staff that, given an appropriate implementation of the NEI commitments, the risk is indeed low, and would warrant consideration of granting exemptions. Without credit for these commitments, the risk will be more than an order of magnitude higher.

Table 5.1 Summary of Results

September 5, 2000 (1:54PM)

Initiating Event	**Fuel Uncovery Frequency (per year)**
Internal Fires	2.3E-08
Loss of Cooling	1.4E-08
Loss of Inventory	3.0E-09
Loss of Off-site Power (plant centered & grid-related events)	2.9E-8
Loss of Off-site Power (severe weather events)	1.1E-7
TOTAL	1.8E-07

6.0 REFERENCES

1. Memorandum, G. M. Holahan (NRC) to J. A. Zwolinski (NRC), "Preliminary Draft Technical Study of Spent Fuel Pool Accidents for Decommissioning Plants," June 16, 1999.

2. Letter from L. Hendricks of the Nuclear Energy Institute (NEI) to R. Barrett of the USNRC, November 12, 1999.

3. Letter, J. A. Lake (INEEL) to G. B. Kelly (NRC), "Details for the Spent Fuel Pool Operator Dose Calculations," CCN# 00-000479, October 20, 1999.

4. K. D. Russell, et al., "Systems Analysis Programs for Hands-on Integrated Reliability Evaluations (SAPHIRE), Version 5.0: Technical Reference Manual," NUREG/CR-6116, July 1994.

5. Williams, J. C., "A Data-Based Method for Assessing and Reducing Human Error to Improve Operational Performance", in Proceedings of the 1988 IEEE Conference on Human Factors and Poer PLants, Monterey, Ca., June 5-9, 1988, pp 436-450, Institiute of Electrical and Electronics Engineers, New York, NY, 1988.

6. Hollnagel, E., "Cognitive Reliability and Error Analysis Method - CREAM" Elsevier, 1998.

7. Cooper, S. E., et al, "A Technique for Human Error Analysis (ATHEANA), NUREG/CR-6350, May 1996, USNRC.

8. Swain, A. D., and Guttman, H. E., "Handbook of Human Reliability Analysis with Emphasis on Nuclear Power Plant Applications", (THERP), NUREG/CR-1278, August 1983, USNRC.

9. Byers, J.C., et al., "Revision of the 1994 ASP HRA Methodology (Draft)", INEEL/EXT-99-00041, January 1999.

10. Sailor, et. al., "Severe Accidents in Spent Fuel Pools in Support of Generic Issue 82", NUREG/CR-4982 (BNL-NUREG-52093), July 1987.

11. U.S. Nuclear Regulatory Commission, "Control of Heavy Loads at Nuclear Power Plants, Resolution of Generic Technical Activity A-36," NUREG-0612, July 1980.

12. U.S. Nuclear Regulatory Commission, "Operating Experience Feedback Report - Assessment of Spent Fuel Cooling," NUREG-1275, Volume 12, February 1997.

13. Idaho National Engineering and Environmental Laboratory, "Loss of Spent Fuel Pool Cooling PRA: Model and Results," INEL-96/0334, September 1996.

14. Electric Power Research Institute, "Fire-Induced Vulnerability Evaluation (FIVE)," EPRI TR-100370s, April 1992.

15. OREDA-92 Offshore Reliability Data Handbook, 2nd Edition, 1992.

16. Atwood, et. al., "Evaluation of Loss of Offsite Power Events at Nuclear Power Plants: 1980 - 1996," NUREG/CR-5496, November 1998.

17. U.S. Nuclear Regulatory Commission, "Evaluation of Station Blackout Accidents at Nuclear Power Plants," NUREG-1032, June 1988.

18. U.S. Nuclear Regulatory Commission, "Single-Failure-Proof Cranes for Nuclear Power Plants," USNRC Report NUREG-0554, May 1979.