11.3 GASEOUS WASTE MANAGEMENT SYSTEMS

This section describes the capabilities to control, collect, process, handle, and dispose of the gaseous radioactive waste generated as a result of normal operation and anticipated operational occurrences.

The systems addressed in this section are the off-gas system, the turbine gland seal exhaust system, and the mechanical vacuum pump system. The effects of hydrogen addition for hydrogen water chemistry are also addressed in this section.

The off-gas system collects, contains, and processes the radioactive gases extracted from the steam condenser. The gases are exhausted by the steam jet air ejectors and flow through a preheater to a catalytic recombiner where all of the hydrogen is recombined with oxygen to form steam. All steam, from recombination booster jets and dilution is condensed for return as condensate and the noncondensible gases flow to a holdup pipe. The gas flow continues through a cooler condenser, a moisture separator, electric reheaters, a prefilter, activated charcoal adsorber vessels, high efficiency particulate air (HEPA) filters, and then to the 310-foot chimney for discharge to the environment. An alternate off-gas system flow path allows flow to bypass the catalytic recombiners, the activated charcoal adsorber vessels, (bypass lines around 2A and 3B recombiners exist but their use is not permitted by TSUP.)

The gland seal exhaust system removes steam, air and radioactive gases from the turbine gland sealing system(see section 10.4.3) exhaust header. The steam is condensed and the condensate returned to the main condenser. The gases are discharged to the chimney via a holdup volume in the base of the stack shared by Units 2 and 3

The mechanical vacuum pump system rapidly establishes main condenser vacuum during startup. The vacuum pump effluent is discharged to the gland seal exhaust system line to the holdup volume in the stack base. If the mechanical vacuum pump is not available, the SJAES can establish vacuum.

The hydrogen water chemistry (HWC) system, including the hydrogen addition and oxygen addition systems, is described in Section 5.4.

The gaseous waste treatment facilities, including the 310-foot chimney (see Section 3.3 for additional details), were evaluated under the Systematic Evaluation Program (SEP) Topic III-4.A with respect to tornado-generated missiles. Two cases were evaluated, and it was determined that the Dresden Station Unit 2 gaseous waste treatment facilities were adequately protected from the effects of tornado missiles. In Topic III-2 the reactor building ventilation stack was evaluated. It was determined that the loss of the reactor building ventilation stack would not result in an inability to achieve safe shutdown or in an adverse offsite radiological impact. Upgrading of the reactor building ventilation stack to withstand the design basis tornado was not recommended.[1]

11.3.1 Design Objectives

11.3.1.1 Off-Gas System

The design objectives of the off-gas system are as follows:

rather than electrically to eliminate the presence of potential ignition sources and to limit the temperature of the gases in event of cessation of gas flow.

11.3.2 System Description

There are 16 sources of radioactive gaseous effluent, all of which exhaust through the 310-foot chimney. These sources are listed in Table 11.3-1.

Major sources of gaseous waste radioactivity are the off-gas system and the turbine gland seal system.

The off-gas system is discussed in Section 11.3.2.1. The ventilation systems for the off-gas recombiner rooms for Units 2 and 3, the turbine building for Units 2 and 3, the radwaste building, the maximum recycle building, and the solidification building are discussed in detail in Section 9.4. The potentially radioactive ventilation air from these systems is discharged to the environment through the 310-foot chimney. The SBGTS discharges treated radioactive gases to the environment through the 310-foot chimney. The SBGTS is discussed in more detail in Section 6.5. The turbine gland seal system for Units 2 and 3 and the mechanical vacuum pump system for Units 2 and 3 are discussed in Sections 11.3.2.2 and 11.3.2.3 respectively.

11.3.2.1 Off-Gas System

11.3.2.1.1 Process Description

The off-gas system is shown in Drawings M-43, Sheets 1, 2, and 3, and M-371, Sheets 1, 2, and 3. The general arrangement drawings referenced in Section 1.2 show the elevation and plan views for the off-gas systems. Drawings M-12, Sheet 2 and M-345, Sheet 2 show more detail of the piping for the steam jet air ejectors. In brief, the condenser off-gas, or air ejector effluent, passes through a recombiner for radiolytically produced H_2, and O_2, followed by moisture separators, a shielded holdup line, a treatment system including additional moisture separation, a bed of activated charcoal filters, and through final particulate filters. It is then discharged at a height of about 40 feet inside of the chimney from a line that enters at the base. The effluents are diluted by a large volume of ventilation exhaust from several buildings (Table 11.3-2); the ventilation exhaust enters the side of the chimney at a height of about 40 feet and contains little activity by comparison.

The off-gas system operates at a pressure of approximately 6 psig or less, so the differential pressure that could cause leakage is small. To preclude leakage of radioactive gases, the system is welded wherever possible, and bellows seal valve stems or equivalent are used. The entire system is designed to maintain its integrity in the event of a hydrogen-oxygen detonation.

11.3.2.1.2 Description of Major Components

11.3.2.1.2.1 Steam Jet Air Ejectors

The 2A, 3A and 3B trains have a two stage air ejector unit with an inter and after condenser, which discharges to a booster jet. Dilution steam is added to the discharge flow to the preheater. Either or both first stage jets may be used depending on the capacity needed and condensate temperature, but both second stage jets must be used at all times. (This arrangement resulted from a modification made to the original system when the plant was modified for closed cycle circulating water system operation.) Drawings M-43, Sheets 2 and 3, and M-371, Sheets 1 and 2.

The 2B train has two first stage jets whose use is the same as in 2A, 3A and 3B trains. There are two second stage jets whose discharge bypasses the after condenser. There is no booster jet, but dilution steam is also added to the flow path. (This arrangement resulted from a modification made to prevent Off Gas fires, by maintaining the gas mixture diluted.) Steam is never condensed out of the flow stream by the after condenser, so there is never a combustible mixture present in the 2B train. Figures 11.3-1 and 11.3-2.

Steam for the jets is from the turbine throttle header via 125 psig pressure control valves.

11.3.2.1.2.2 Preheaters

The preheaters are U-tube heat exchangers using steam on the tube side to superheat the off-gas mixture of steam and gases on the shell side. The off-gas mixture is heated to ensure recombination. The preheaters are heated with steam rather than electricity to eliminate the presence of potential ignition sources and to limit the temperature of the gases in the event of cessation of gas flow. The steam source is the turbine throttle steam, and the steam passes through a pressure-reducing valve set at 250 psig. This limits the steam temperature at or below 410°F in case of loss of off-gas flow.

11.3.2.1.2.12 Afterfilters

Afterfilters provide the final filtration of the off-gas before its release to the 310-foot chimney.

The filters, located just before the chimney, consist of two 100% capacity HEPA filtering units. The second filter (spare) provides backup and assures availability of filtration. These filters are designed to remove from the off-gas 99.97% of the particulates greater than 0.3 μm in size. Static grounding wires are installed on the filter to minimize the potential for an off-gas explosion at this point. A loop seal is installed on the drain line from the filters to eliminate a leakage point for the radioactive gaseous effluent. The maximum operating differential pressure across these filter units is 4 in.H_2O. Pressure switches alarm in the control room on high differential pressure across the filter unit.

11.3.2.1.3 Redundancy of Equipment

Redundancy of the air ejector, preheater, recombiner, off-gas condenser, water separator, cooler-condenser systems, moisture separator, particulate filters, and activated charcoal adsorber vessel vault air conditioning units is provided for operating convenience and maintenance. There are two, 100% redundant SJAE and recombiner trains. Provision is made for the two hydrogen analyzers to sample the effluent from either or both recombiner trains. Either or both cooler condenser trains (cooler condenser, moisture separator, reheater, and prefilter) may be selected for operation. The activated charcoal adsorber beds can be operated in one of three modes: all 12 activated charcoal adsorber beds in series; three parallel strings of four activated charcoal adsorber beds or bypassing of all 12 activated charcoal adsorber beds.

11.3.2.1.4 Alternate Off-Gas Discharge Pathway

Alternate pathways for the radioactive gases, as shown in Drawings M-43, Sheets 1 and 3 and M-371, Sheets 1 and 3, exist from the SJAE to the main chimney for discharge to the environment. These alternate pathways can bypass the recombiner train and the activated charcoal adsorber vessels and establish the original design pathway with only the holdup pipe and discharge filters to account for nuclide decay and for capturing particulates in the gas stream. Valving is provided to bypass and isolate the off-gas treatment system (recombiner and/or activated charcoal adsorber beds) and to operate with just the holdup line. Using this alternate pathway, the radioactive gases entering the off-gas system are held up to allow decay of the short-lived isotopes before being discharged to the environment through the 310-foot chimney. The radioactive gases from the main condenser air ejectors are delayed a minimum of 30 minutes in shielded piping before entering the activated charcoal and HEPA filter system.

A more desirable alternate pathway is to bypass only the activated charcoal adsorber system. Use of the recombiners in the off-gas system would allow up to 6 hours holdup due to the removal of the hydrogen and oxygen content as water. Due to the high moisture content of the off-gas stream the activated charcoal adsorber beds cannot be employed in the system if the recombiners are bypassed.

The 2B recombiner can not be bypassed due to the fire prevention modification, and the 3A recombiner cannot be bypassed due to cutting and capping of Unit 3 SJAE crosstie.

11.3.2.1.5 Instrumentation and Control

The off-gas system is monitored by flow, humidity, and temperature instrumentation and by hydrogen analyzers for operation and control. Table 11.3-4 lists process instruments that cause alarms and notes whether the parameters are indicated or recorded in the main control room.

Drawings M-43, Sheet 5 and M-371, Sheet 5 show the hydrogen analyzer and oxygen analyzers for the off-gas system.

11.3.2.1.6 Process Monitoring and Sampling

The activity of the effluent entering and leaving the off-gas treatment system is continuously monitored.

The off-gas sampling system sample racks are shown in Drawings M-178, M-179, M-420, and M-421.

The process radiation monitoring includes the air ejector off-gas monitoring system and the area radiation monitors for the activated charcoal adsorber vessel vault. The air ejector off-gas monitoring system is discussed in Section 11.5, and the activated charcoal adsorber vessel vault area radiation monitor is discussed in Section 12.3. The activated charcoal adsorber vessel vault radiation monitor provides a local high-radiation alarm. A low alarm indicates malfunction of this monitoring system.

A manual sample of the process treated off-gas flow stream is taken downstream of the activated charcoal adsorber beds, see Drawings M-179 and M-421. At other sample points shown in Drawings M-43, Sheets 2 and 3, and M-371, Sheets 2 and 3, sample vials of gas are collected manually from the off-gas sampling system at a common point located in the off-gas filter building.

11.3.2.1.7 Inspection and Testing

The off-gas and exhaust ventilation filters are replaced when the pressure drop across the filter exceeds the normal operating range. Test connections are available for checking the efficiency of the installed filters. Adequate tests to determine filter efficiency are conducted as necessary. They are only of importance when fission gas release rates are significant. The off-gas system prefilters are also included in the testing requirements.

The gaseous waste disposal systems are used on a routine basis and do not require specific testing to assure operability.

Monitoring equipment and process instrumentation are calibrated and maintained on a specific schedule or when indication of malfunction occurs. The systems were functionally tested to verify their initial operability prior to placing them in service. The radioactive gaseous radiation monitoring instruments listed in the ODCM are demonstrated operable by performance of an instrument check on a daily basis. The offgas system air operated valves are tested every refuel outage in conjunction with the offgas radiation monitor calibration and main steam line high radiation offgas valves logic testing.

11.3.2.2 Turbine Gland Seal Exhaust System

11.3.2.2.1 System Description

The turbine gland seal exhaust system (see Figure 10.4-2 and Drawings M-43, Sheet 1 and M-371, Sheet 1) consists of the gland steam condenser and the gland steam condenser exhauster. There are two turbine gland seal exhaust systems for each unit.

The turbine gland sealing steam, along with substantial quantities of air (which is drawn through the outer seals), is drawn to the gland steam condenser by the exhauster. Approximately 95% of the steam used in the turbine gland seals is condensed in the gland steam condenser and returned to the main condenser.

The remaining steam, air and noncondensibles (including any radioactive gases) present in the gland seal off-gas is discharged to the Unit 2/3 common hold-up volume for gland seal exhaust/main vacuum pumps in the base of the chimney. The small quantity of radioactive gases released by way of the gland seal off-gas system does not require a long decay time. A minimum holdup time of 1.75 minutes in the hold up volume is used for decay of the major activation gases (N-16 and O-19), which have half-lives on the order of seconds.

The gland seal steam condenser exhauster maintains a vacuum on the gland seal steam condenser and the sealing steam exhaust header. The effluents from the gland seal system cannot be routed to the air ejector recombiner or charcoal beds. The relative absence of hydrogen renders a recombiner useless for reducing the effluents from this system. In using charcoal to delay radioactive noble gases, the volume required for a given delay time is directly proportional to the gas flow. The noncondensible air and gas flow from the gland seals is about 30 to 50 times larger than the flow of noncondensibles exiting a recombiner in the off-gas system. Therefore, dynamic charcoal adsorption is not practical for treatment of the gland seal effluent discharged to the chimney. The shorter holdup time is adequate because the activity present in this system is three orders of magnitude less than that from the condenser air ejector.

11.3.2.2.2 Description of Major Components

11.3.2.2.2.1 Turbine Gland Seal Exhaust System Condenser

The turbine gland seal exhaust system condenser, using main condensate water through double-pass tubes, condenses about 95% of the steam in the gas stream. A bypass flapper in the water box causes most of the main condensate to bypass the tubes except at low flow. Level is maintained by a control valve. There are high and low level alarms.

11.3.2.2.2.2 Turbine Gland Seal Steam Condenser Exhauster

The turbine gland seal steam condenser exhauster maintains a vacuum on the turbine gland seal steam condenser and thereby on the gland sealing steam exhaust. The exhauster vents to the 1.75-minute holdup volume.

11.3.2.3 Mechanical Vacuum Pump System

The mechanical vacuum pump system (see Drawings M-43, Sheet 1 and M-371, Sheet 1) rapidly establishes the main condenser vacuum at 20 to 25 in.Hg in preparation for condenser operation. This system is used only during startup. It exhausts through a discharge silencing tank at about 2320 scfm of gas (air) at 15 in.Hg. The pump discharges this flow of contaminated gaseous effluent to the base of the 310-foot chimney via the gland seal exhaust system piping. There is one condenser vacuum pump and silencer for each unit. If it is not available, the SJAEs can draw vacuum, but this takes considerably longer.

11.3.2.4 Hydrogen Ignition Control

Because the off-gas system contains mixtures of hydrogen and oxygen, it contains a potentially explosive and burnable gas stream. Some of the precautions taken to minimize the potential for these explosions, pre-ignitions, and fires are as follows:

A. The off-gas afterfilters are grounded to prevent static build-up and sparks;

B. Operating procedures exist for controlling and extinguishing an off-gas system fire. Normally an explosive mixture exists only between the second stage air ejector discharge and the booster jet in 2A, 3A and 3B strains. 2B train was modified to always have a diluted, non combustible mixture, to prevent off gas fires.

11.3.3 Radioactive Releases

11.3.3.1 Plant Release Points

There are four release points to the atmosphere for gaseous effluent and ventilation exhaust - the reactor building vent stack, the 310-foot chimney, the Unit 1 chimney, and Unit 1 chemical cleaning building stack.

11.3.3.1.1 Reactor Building Ventilation Stack

The physical and process characteristics of the two principal gaseous release points are shown in Table 11.3-5. The limitations for release of gaseous effluents from the station are set in the ODCM. Table 11.3-6[2-11] presents the typical radioactive isotopes and quantities discharged from Units 2 and 3.

Air from the reactor building ventilation exhaust (approximately 110,000 ft^3/min per unit) is normally released through the reactor building vent stack, which is common to Units 2 and 3 (see Drawings M-269, Sheet 1 and M-529). If activity is present in any significant quantity, secondary containment is isolated and normal ventilation flow to the vent stack is automatically terminated as discussed in Section 6.2.3. Flow from the standby gas treatment system (SBGTS) (4000 ft^3/min) is directed to the base of the chimney. The SBGTS has its own particulate and charcoal filters.

Air or nitrogen from inerting or deinerting the drywell is normally discharged with the reactor building ventilation exhaust from the vent stack. If radioactivity is present in any significant quantity (because of activation products such as Argon-41 for example) the purge air can be discharged separately through the SBGTS to avoid a high-radiation trip of the reactor building ventilation.

11.3.3.1.2 Plant 310-Foot Chimney

The ventilation system air flow through the chimney is approximately 430,910 ft^3/min during normal operation of both units. The radioactive gaseous flow from the off-gas systems, the turbine gland seal systems, and the SBGTS is estimated to

be 12,000 ft^3/min during operation of both units. The radioactive gaseous system flows for the main chimney are shown on Figure 11.3-17 (Figure 10-2 from the Offsite Dose Calculation Manual [ODCM]).[12] The chimney dilution flow of ventilation air is shown on Drawing M-272.

Natural dispersion of gases into the atmosphere is achieved in an efficient manner by discharge through the chimney. The combination of the height of the chimney, the exit velocity of the effluent, and the buoyancy of the exit gases promotes favorable plume behavior for efficient dispersal. The height of the chimney assures that diffusion of the plume will not be influenced by the eddy currents occurring around the station structures. Based upon diffusion characteristics of the gases and considering the meteorological characteristics of the site and surroundings, it is calculated that release from the top of the 310-foot chimney contributes to a reduction in offsite dose by a factor of approximately 100 as compared with release of the gaseous wastes at ground level.

Air ejector off-gases are normally expected to have the composition shown in Table 11.3-3.

The activation gases listed in Table 11.3-7 (principally N-13) are released from the chimney at the rate of approximately 250 μCi/s per unit during operation at 2527 MWt. The rate of release of these gases is proportional to the thermal output of the reactor and the holdup time in the system before release at the chimney. For Units 2 and 3, the combined release rate is approximately 500 μCi/s.

The fission product gases may arise from minor amounts of tramp uranium on the surface of the fuel cladding, from imperfections, or from perforations which might develop in the fuel cladding. The principal gaseous isotopes from fissionable material sources discharged from the chimney are shown in Table 11.3-8. Typical quantities, including the isotopic analysis, of the radioisotopes discharged from the 310-foot chimney are presented in Table 11.3-8.[2-11]

In the absence of fuel rod leaks, N-13 from the air ejector off-gases and the N-16 and O-19 from the gland seal system are the principal contributors to the environs radiation dose. The aggregate of these three corresponds to a radiation dose of less than 0.1 mrem/yr. If fuel rod leaks do occur, the noble radioactive gases xenon and krypton become the principal contributors. The solid daughter products of the noble gases are removed in the filter of the off-gas system before release of the gases to the 310-foot chimney.
The holdup of the condenser air ejector off-gas provides sufficient time between detection of high-radiation levels and isolation of the holdup line to prevent release of fission product gases in excess of the release limits. When such a release rate is detected, the holdup line is automatically isolated after a 15-minute delay. This time interval is provided to permit corrective action to be taken to obviate plant shutdown. The holdup time is established to provide for decay of short half-lived noble gases to reduce chimney release.

Similarly the 1.75-minute holdup time for the gland seal off-gas system is chosen to provide sufficient decay of the activation gases. The holdup time is shorter because the activity present in this system is three orders of magnitude less than that from the condenser air ejector. The short holdup time allows decay of N-16 and O-19, which have half-lives of 7 and 27 seconds, respectively. The 1.75 minute holdup time is provided by a five chamber holdup volume in the base of the chimney. This holdup volume is common to Units 2 and 3.

11.3.3.1.3 Unit 1 Chimney

The Unit 1 chimney is a monitored release point for the Unit 1 gaseous monitoring and off gas filter building ventilation systems.

11.3.3.1.4 Unit 1 Chemical Cleaning Building Ventilation Stack

The Unit 1 chemical cleaning building and interim radwaste storage facility (IRSF) ventilation systems exhaust into the Unit 1 chemical cleaning building stack. The exhaust discharge is monitored to support the IRSF.

11.3.3.2 Effluent Monitoring and Sampling

The off-gas system provides ample monitoring and control to ensure that limits set forth in 10 CFR 20 are not exceeded. The off-gas holdup, effluent sampling, calibrating of the off-gas monitors, particulate filtering, and excessive release alarm are all protection measures taken to meet standards set by 10 CFR 20.

Normal monitoring of the chimney effluent is by a sampling radiation monitor suited to measuring a low concentration of activity in a large flow. In the event that operation of the SBGTS is required and, coincidentally, the turbine building ventilation is shut off, the activity in the small undiluted flow could exceed the sensitivity of the chimney monitor. It is therefore unsuited for measurement of an accident effluent. Additionally, the fission product mixture for an accident effluent is energetically quite varied relative to the normal noble gas mixture in the off-gas.

The original chimney monitoring system is intended for normal audit. A high-range noble gas monitor has been added for monitoring of any accident effluent (not only to the chimney, but to all potential release points). It is also an offline-sampling-type monitor. The sampling system for the 310-foot chimney is shown in Drawing M-422, Sheet 2.

Control of air ejector off-gas release rates is accomplished by duplicate continuous radiation monitor recorders on the off-gas line, which alarm in the control room. This monitoring instrumentation is described in Section 11.5. Samples of the air ejector off-gas can be taken for laboratory analysis and can be used to calibrate and check the air ejector off-gas monitors. The chimney monitors provide backup alarms for and supply data to the processor about the chimney release activity.

Similarly, the reactor building ventilation stack is monitored for the total release of radionuclides from this system. This stack monitor (see Figure 11.3-19 [Drawing M-422, Sheet 1]) has only an alarm function. The two monitors upstream of the reactor building ventilation duct isolation dampers also monitor the individual unit ventilation gas activity and, upon reaching a predetermined setpoint, causes secondary containment isolation. These monitors are discussed in more detail in Section 11.5. Secondary containment isolation is addressed in Section 6.2.3.

11.3.3.3 Effects of Hydrogen Addition

Commonwealth Edison has reviewed the effects that HWC has on offsite dose. The results of these calculations are based on conservative assumptions and should be considered approximate. The anticipated, calculated, offsite dose to the nearest individual is summarized below:

A.	Units 2 and 3 without HWC	1.7 mrem/year
B.	Unit 2 with HWC and Unit 3 without	4.8 mrem/year
C.	Units 2 and 3 with HWC	8.0 mrem/year

During the first HWC test (performed in May and June of 1982) it was determined that injecting hydrogen into the feedwater increases the carry-over of N-16 with the steam. This phenomenon results in higher than normal radiation levels in all areas of the plant that contain steam piping. This effect raised concerns about an increase in offsite dose due to the "sky-shine" of the turbine.

During operation of Unit 2 with Cycle 9 reload, an assessment of the effects of hydrogen injection on dose rate was made. In order to assess the effects of hydrogen injection, dose rate measurements were taken under the following conditions:

A. With hydrogen injection;

B. Without hydrogen injection; and

C. With Unit 2 shutdown.

Units 1 and 3 were shut down during this operating period.

The data indicate that the three plant areas most significantly influenced by hydrogen injection are the main turbine floor, the area above the main turbine floor, and the condensate pump room area. The largest average increase is seen on the turbine deck where dose rates rise by 450%. Additional decay time in the condenser and hotwell lessen the N-16 contribution in the condenser pump room so the dose rates increase by only 340%.

The area that shows the most significant increase is the turbine crane cab. The radiation shine off the top of the turbine increases the dose rate to the crane operator to as much as 100 mrem/hr. This dose rate is a function of positioning over the turbine as well as the amount of hydrogen being injected into the feedwater.

Other areas surveyed in the turbine building realize an insignificant increase in dose rates. All of these areas are well-shielded from reactor steam and condensate lines.

To assess the HWC impact on the environmental dose, thirty locations were selected to be surveyed based on their positions relative to one reference point. The reference point, the intersection of the turbine axis and center line between the D-2 low pressure turbines B and C, was assumed to be the center of the N-16 source for the environs. Measurements were taken for 5 to 30 minutes using a multiplying ion chamber.

Based on the data obtained, the contributions from HWC to the environment dose rate is a function of measurement location. Significant variation exists in the dose rate contributions at similar distances. This is a result of the shielding effect of various onsite structures and the dose contributed from radioactive onsite storage (such as holding tanks).

Table 11.3-4

PROCESS INSTRUMENT ALARMS FOR OFF-GAS TREATMENT SYSTEM

Parameter	Main Control Room	
	Indicated	Recorded
Preheater discharge temperature — low	X	
Recombiner catalyst temperature — high/low		X
Off-gas condenser drain well (dual) level — high/low (alarm only)		
Off-gas condenser gas discharge temperature — high (alarm only)		
H_2 analyzer (off-gas condenser discharge) (dual) — high		X
Cooler-condenser discharge temperature — high		X
Glycol solution temperature — high/low		X
Glycol storage tank level — low (alarm only)		
Prefilter differential pressure — high	X	
Charcoal bed inlet humidity — high		X
Charcoal bed temperature — high		X
Charcoal vault temperature — high/low		X
After filter inlet gas flow — high/low		X
After filter differential pressure — high (alarm only)		

11.4 SOLID WASTE MANAGEMENT SYSTEM

This section describes the capabilities of the station for collecting, processing, and packaging wet and dry solid radioactive waste generated as a result of normal operation, including anticipated operational occurrences, for shipment offsite or storage onsite.

Contract services are used for processing Class A unstable waste and waste which requires stability for burial offsite due to the requirements of 10 CFR 61. The process control program (PCP)[1] is used, as applicable, to process all low-level radioactive wet wastes that are solidified or dewatered to meet the applicable federal, state, and burial site requirements.

The solid radwaste area is shown in the general arrangement drawings referenced in Section 1.2. The treatment and flow of wet solid waste is shown in Drawing M-46, Sheet 1.

11.4.1 Design Objectives

The design objectives of the solid radioactive waste control system are to process, package, and provide shielded facilities for solid wastes and to allow for radioactive decay and/or temporary storage prior to shipment from the station for offsite disposal. These solid radioactive wastes are prepared for shipment via common or contract carriers on vehicles having suitable shielding, in compliance with the United States Department of Transportation (DOT) regulations (49 CFR) and 10 CFR 20, 10 CFR 61, and 10 CFR 71 as applicable.

11.4.2 System Description

The solid radioactive waste control system is a series of mechanical operations that are designed to process the solid wastes remotely with a minimum of personnel handling and exposure. The equipment supplied to accomplish this handling is designed to be remotely operated in order to accomplish the functions described below. The handling and processing are capable of being performed without exceeding established exposure limits.

The following are typical solid radioactive wastes:

A. Filter sludges and spent resins;

B. Concentrated wastes;

C. Air filters from off-gas and radioactive ventilation systems;

D. Contaminated clothing, tools, and small pieces of equipment which cannot be economically decontaminated;

building container storage areas. DAW may also be stored at an interim storage location which is away from the processing area while awaiting shipment to the processor or burial site.

11.4.4.2 Contractor Solidified, Dewatered, or Encapsulated Waste

The contractor solidified waste and the container are normally shipped when solidification is completed. The contractor dewatered waste and the container are normally shipped when dewatering is completed. Contractor encapsulated waste is generally shipped when encapsulation is completed. If storage is required for any of these types of wastes, the containers of waste may be temporarily stored onsite at an interim storage location. If processed waste is required to be stored after being processed off-site, it will be shipped back from the processor and stored at an interim storage location in acceptable burial containers.

11.4.4.3 Interim Radwaste Storage Facility

The interim radwaste storage facility (IRSF) was constructed to facilitate continued nuclear power station operation should the existing burial facilities shut down.

The IRSF is located inside the protected area. Figure 11.4-2 shows the location of the facility. Figure 11.4-3 shows the general arrangement of the IRSF.

A portion of the existing chemical cleaning facility was used in the construction of the IRSF. The major IRSF areas are the truck bay, control room, equipment room, and storage bay. The truck and storage bays are serviced by a 10-ton crane.

Six closed-circuit television (CCTV) cameras are located on the crane; two of them are permanently fixed to observe the grid system coordinates for proper placement of the low level waste (LLW) containers. The other four CCTV cameras can be moved to several orientations to facilitate container placement and remote container surveillances.

Storage bay access is limited to access through the normally locked container decontamination area or via the crane through the storage bay/truck bay interface notch.

The IRSF truck bay is used for receiving LLW material for storage. It is also used as a truck loading area for LLW material being shipped to the burial site.

The control room contains the IRSF crane control panel and CCTV monitors. The control room and the equipment room are located adjacent to the IRSF but in the chemical cleaning building. The ventilation system for the IRSF is an extension of the chemical cleaning building ventilation system. The ventilation system exhausts through a prefilter/HEPA filter arrangement and then through the chemical cleaning building exhaust stack. The exhaust discharge is monitored for radioactivity.

C. To provide an alarm when radiation levels or releases exceed preselected levels.

Additional specific performance objectives are stated for each system as they apply.

11.5.1.1 Main Steam Line Monitoring System

The MSL monitoring system is designed to continuously monitor the radiation from the MSLs to permit the prompt indication of gross release of fission products from the fuel to the reactor primary system coolant and subsequently to the turbine-generator system.

The monitoring system automatically initiates a trip and isolation of the mechanical vacuum pump, if activity levels in the MSLs indicate that such action is required. Isolation of the mechanical vacuum pump is achieved by closure of the steam jet air ejector suction valves.

In addition to the MSL monitoring, gross fuel failure is detected by the off-gas monitoring and chimney effluent monitoring systems. These systems are described in Sections 11.5.2.2 and 11.5.2.3.

11.5.1.2 Air Ejector Off-Gas Monitoring System

The air ejector off-gas monitors are designed to provide the following functions:

A. Continuously monitor, indicate, and record the radioactivity level of the effluent gases removed from the main condenser by the air ejector off-gas system;

B. Alarm in the control room on high-radiation level in the off-gas system; and

C. Initiate closure (after a time delay) of the off-gas system isolation valve when the radiation level in the off-gas system exceeds the prescribed limit.

11.5.1.3 Chimney Effluent Monitoring System

In order that the operator can be continuously aware of activity being released from the plant, the chimney effluent monitoring system is designed to continuously monitor, indicate, and record the radioactivity level of the effluent gases being discharged from the chimney to the atmosphere. The chimney discharge includes particulate, iodine, and noble gases released during both normal operating

11.5.1.8 Liquid Radioactive Waste Discharge Monitoring System

The liquid radioactive waste discharge monitor continuously measures, indicates, and records the radioactivity concentration levels during a discharge to the river. The monitor alarms in both control rooms (see Drawing M-347B) when the radiation level approaches limitation for station discharge. Requirements for continuing liquid discharge without the monitor are specified in the ODCM.

11.5.1.9 Isolation Condenser Vent Monitoring System

The isolation condenser vent monitor is designed to detect and warn the operator of a tube leak. To meet the design requirement, the shell-side vent monitor records the radioactivity of the vent effluent and alarms in the main control room if a preset level is exceeded.

11.5.1.10 Onsite/Offsite Environmental Monitoring

Onsite and offsite monitoring stations which measure the gamma radiation level and collect airborne particulates for periodic analysis are provided to confirm that releases of airborne radioactive materials have been controlled within the limits established by license or 10 CFR 20 and the design criteria specified in 10 CFR 50, Appendix I.

11.5.1.11 Linear Monitoring (Flux Tilt Monitor) System

The linear monitoring (flux tilt monitor) system is designed to assist in determining the location of leaking fuel elements in the reactor core.

11.5.1.12 High Radiation Sampling System

The high radiation sampling system (HRSS) is designed to sample the reactor coolant and associated reactor waste streams. Sampling these streams enables the operator to assess the extent of reactor coolant leakage throughout the station during post-accident operations.

11.5.2 System Description

The MSL monitoring system provides indication, alarm, and isolation functions. The air ejector monitors and the reactor building ventilation monitors also perform an automatic isolation or closure function. The following systems, which do not perform an automatic isolation function, are intended to provide an information and alarm function: the chimney effluent monitor, process liquid monitors, isolation condenser monitor, and reactor building ventilation stack

monitor. Table 11.5-1 presents the parameters for the radiation monitoring system equipment.

The systems which provide an automatic isolation function can be classified into two radiological source categories. The first category is the reactor building monitors, which are intended to detect abnormal amounts of radioactive material in the reactor building air which could be released to the environment untreated if normal ventilation were not terminated. Thus this system isolates secondary containment. The reactor building monitors are addressed further in Section 6.2.3.

The second category of automatic isolation systems includes the MSL monitors and air ejector monitors. Both of these systems sample essentially the same potential source of abnormal amounts of radioactive material, i.e., gaseous fission products released from the reactor core. The steam line monitors are intended to provide rapid detection of gross fuel failure.

The air ejector monitors provide a dual function. One is an alarm function in the control room when the high-radiation setpoint is exceeded; the other is an automatic isolation function (after a 15-minute delay) when the high-high radiation setpoint is reached. This latter function, with the associated holdup prior to actual release of off-gas to the atmosphere, assures that the normal operating limits of 10 CFR 20 are not exceeded and, in addition, provides a backup isolation function to the steam line monitors to further assure that the fission products from a gross fuel failure are retained in the plant.

All monitors are capable of problem self-indication, i.e., they give an alarm when downscaled or deenergized. Alarms are also provided to give warning if the monitor's sampling system malfunctions. All monitors are capable of operational verification by means of test signals or radioactive check sources.

All monitoring systems provide continuous indication in the control room. As a general requirement, the various process monitors are capable of initiating appropriate alarms and actuating control equipment to assure containment of radioactive materials if preestablished limits are approached.

11.5.2.1 Main Steam Line Monitoring System

The main steam line monitoring system (see Figures 11.5-1 and 11.5-2) incorporates four channels of instrumentation for the group of four MSLs with each channel consisting of the following components:

A. A gamma-sensitive ionization chamber;

B. A dc log radiation monitor complete with fail-safe operational alarms, appropriate high- and low-voltage power supplies, and control and alarm trip contacts; and

C. A continuous strip chart recorder.

Each channel is continuously indicated and recorded in the main control room. Each channel also alarms in the main control room.

The detection points are immediately downstream of the outboard isolation valves in the primary containment structure. A channel reading of 1.5 times normal background level with hydrogen addition provides an alarm on any of the four channels. A channel reading of 3 times normal background level with hydrogen addition will trip and isolate the mechanical vacuum pump.

The main steam line monitors are located such that they are in the radiation field of the four MSLs. The range and sensitivity of the monitors have been chosen such that the monitors are capable of detecting increases of radiation in the environment near the MSLs due to the activity release following a gross fuel failure.

A gross fuel failure would result in a significant increase in the MSL radiation levels. The redundancy of detector channels and the general location of the detectors in the MSL radiation field assure the reliability of the system.

The Channel A MSL radiation monitors, A and C, are powered from the reactor protection system (RPS) bus. The Channel B MSL radiation monitors, B and D, are powered from the essential service system (ESS) bus.

The redundancy incorporated into the monitoring system provides assurance that abnormal releases of radioactive material are detected, annunciated, and isolated.

To calibrate the monitors, the results of analysis of a grab sample are compared to the monitor indications at the time of sampling. Since the radioactivity levels of N-16 and O-19 in the main steam are normally relatively high, the transportation time delay to the air ejector off-gas monitor location allows for the rapid decay of the short-lived gases. The delay permits a more accurate indication of the activity levels of the longer-lived gases of interest.

11.5.2.3 Chimney Effluent Gas Monitoring System

The chimney effluent monitor (see Figure 11.5-4 and Drawing M-422, Sheet 2) consists of a single multiple-range system particulate, iodine, and noble gas (SPING) monitor and a backup system which incorporates two channels of instrumentation.

The release rates (μCi/s) from the 310-foot chimney and the reactor building ventilation stack are calculated from the instrument readouts (counts per second) and totalled by the operator to assure compliance with gaseous release rate limits for the plant. The isotopic quantities are reported as required by the ODCM.

The chimney flow consists of air ejector off-gas (approximately 20 ft^3/min with the recombiner operating; 150 ft^3/min without the recombiner operating) mixed with ventilation air (approximately 430,910 ft^3/min)(see Section 11.3.3.1.2 for additional information). A representative sample is drawn continuously from the chimney through an isokinetic sample probe located at two-thirds of the chimney height. The placement of the probe is in accordance with good engineering design practice, i.e., probe height is at least 10 times the chimney diameter. The SPING monitor and its backup system use the same isokinetic probe.

11.5.2.3.1 SPING Monitoring Instrumentation

The SPING monitor is computerized instrumentation (see Figure 11.5-4 and Drawing M-422, Sheet 2) with sufficient range to accurately monitor the chimney effluent for the worst postulated accident releases as well as for normal operating conditions. The installation of the SPING monitor is a result of the events occurring at Three Mile Island (TMI) on March 28, 1979.

The SPING monitor is a microprocessor-based radiation detection system. The programs (software) which control the system are stored in read-only memory (ROM) and therefore are fixed. Only the parameters of the system can be varied. The microcomputer performs the tasks of data acquisition, history file management, operational status check, and alarm determination. The microcomputer communicates with the operator through a terminal in the control room.

Check sources are provided for some channels as listed in Table 11.5-2.

The basic unit of all calculations on data within the SPING monitor is counts per minute. These individual 1-minute values are instantaneous values. Any background subtraction sources specified are calculated and subtracted from the count rate. The result is the net counts per minute and the data from these individual 1-minute intervals are used in the A Model calculations. History files are maintained on each channel for three time intervals: 23 ten-minute intervals, 24 one-hour intervals, and 24 one-day intervals.

The data for any maintained interval are the average of the accumulated data in that interval. Abnormal status (but not alarm conditions) of the instrument for any interval is stored and indicated.

The SPING monitor and the control terminal in the control room continuously exchange messages and/or data via a communications line. The operator can view the radiation level on any or all channels, retrieve history files, set or reset the pump, flush the instrument, synchronize the clock, and activate check sources on specified channel(s) via the control terminal.

The SPING monitor is provided with a self-contained battery backup power system.

11.5.2.3.2 Backup System

The backup monitoring system (see Figure 11.5-4 and Drawing M-422, Sheet 2) incorporates two channels of instrumentation, each of which includes:

A. An isokinetic sampling probe shared by both channels and the SPING monitor;

B. A particulate and iodine filter assembly shared by both channels;

C. A shielded radiation sampler;

D. A sample pumping assembly shared by both channels;

E. A scintillation crystal-photomultiplier counter;

F. A preamplifier;

G. A log count rate meter in the main control room, range 10^{-1} to 10^{6} cps, with one downscale and two upscale alarms; and

H. A two-pen recorder in the main control room shared by both instrument channels.

This equipment is designed for a mean time between failure of 1 year per point or channel. This includes the power supply and other components listed above.

Power is supplied from the 120-V RPS buses. For each pair of monitors, one channel is powered from one RPS bus and the other channel from the other RPS bus.

This power is very stable, but in the event of a power failure, a downscale alarm occurs in the control room to inform the operator. Should one of the power supplies fail such that no downscale alarm were annunciated, the one remaining power supply and its associated monitors would still give positive indication and a one-out-two trip for secondary containment isolation.

The reactor building ventilation monitoring system is set to isolate secondary containment (see Section 6.2.3) upon detection of a refueling accident. A refueling accident offers the greatest potential for radioactive release via the reactor building ventilation exhaust. The high-level setpoint is chosen sufficiently above refueling operations background radiation level to avoid spurious trips but low enough to trip from the radiation level resulting from the design basis refueling accident.

The refueling accident is evaluated in Section 15.7.3. The reactor building ventilation monitoring system is effective in preventing radioactive release in excess of 10 CFR 100 limitations.

The sensitivity, accuracy, and range capability of the reactor building ventilation GM monitors permit the monitors to detect radioactivity increases in the reactor building ventilation. The monitors are selected with physical and electrical characteristics permitting them to function in the reactor building ventilation environment.

Failure of a monitor which results in a downscale trip will not prevent isolation of the secondary containment (see Section 6.2.3) when the other monitor detects a high-radiation level.

The capability to calibrate and test the monitors is provided by built-in, electronic calibration equipment.

11.5.2.5 Reactor Building Ventilation Stack Monitoring System

The ventilation stack monitor (see Drawing M-422, Sheet 1) is a single, multirange SPING monitor identical to that described for the chimney in Section 11.5.2.3. As a backup to the iodine and particulate sampling capability of the SPING monitor, each unit is equipped with a sampler which extracts a portion of the reactor building ventilation exhaust for sampling. Each sample skid consists of two redundant pumps, a flowmeter, a vacuum gauge, an iodine sample cartridge, and a particulate sample cartridge. Low sample flow is alarmed in the main control room.

The ventilation stack monitor has sufficient range to monitor the reactor building ventilation air exhausting from the stack under normal operating conditions and for the worst postulated accident release rate. The monitor supplements the indication provided by the reactor building ventilation duct monitoring system for

each unit. Secondary containment isolation (see Section 6.2.3) is manually initiated by the operator if the automatic functions of the reactor building ventilation duct monitoring system fail. Adequate backup is also provided for the SPING monitor by the reactor building ventilation exhaust samplers. These samples are routinely removed and counted in the chemistry lab area. The results of SPING monitor and sample testing are reported as required by the ODCM.[1]

11.5.2.6 Reactor Building Closed Cooling Water System Monitoring System

The reactor building closed cooling water system is primarily utilized to provide cooling for potentially contaminated systems such as the reactor water cleanup (RWCU) system, reactor concrete shielding, non-regenerative heat exchangers, and recirculation pumps. The system contains activity due to design inleakage from heat exchangers or other components which contain radioactive water. Changes in the normal radiation level signify an increase in activity concentration in the system.

The process liquid monitor (see Figure 11.5-5) incorporates one channel of instrumentation consisting of the following components:

A. A scintillation crystal-photomultiplier counter;

B. A log count rate meter;

C. A continuous strip chart recorder;

D. Trip auxiliaries; and

E. A control room alarm.

At the mounting installation, a scintillation detector is located in a shielded sampler which is positioned on a vertical section of the process liquid piping. A vertical section of piping is used to minimize background radiation due to plate out.

Trip circuits are also included to indicate abnormal concentrations of fission and radioactive corrosion products so that action can be taken to prevent the accidental transfer of highly radioactive materials. The readout consists of a seven decade meter display. This system shares a common two-pen strip chart recorder with the service water radiation monitoring system.

The reactor building closed cooling water system radiation monitor provides seven- decade monitoring with the lowest decade established below the normal background of the system. The high-radiation alarm setpoint is based upon the normal, full power, operating background but is considerably less than the operating limit. Table 11.5-1 lists the specific data pertaining to the sensitivities and accuracies of the monitoring equipment.

11.5.2.7 Service Water System Monitoring System

The service water (SW) and the containment cooling service water (CCSW) provide cooling to numerous plant systems via heat exchangers (see Sections 9.2.1 for CCSW and 9.2.2 for SW). The Unit 2 and Unit 3 service water system discharge points for SW and CCSW are monitored for radioactivity. High radioactivity detected in the normally non-radioactive SW or CCSW discharges would indicate leakage into the SW or CCSW from one or more of the systems they service.

The monitor portions of the Unit 2 and Unit 3 service water radiation monitor systems are the same (see Figure 11.5-6 and Drawing M-3496 for Unit 2 and Drawing M-3486 for Unit 3). Each service water system monitor incorporates one channel of instrumentation consisting of the following components:

A. An NaI(Tl) gamma scintillation process detector;

B. An NaI(Tl) gamma scintillation background detector;

C. High-radiation annunciation in the control room;

D. Monitor failure annunciation in the control room;

E. Safety Parameter Display System (SPDS) indication; and

F. A continuous strip chart recorder.

The water sample is taken from the service water standpipe and provided to the process radiation detector. The process radiation detector and adjacent background radiation detector signals are fed through local interface boxes (B-2) to a data acquisition module (DAM) in the radwaste control room. The DAM accumulates the count data for each detector and calculates the count rate through background subtraction. If the high-radiation setpoint is exceeded, the high-radiation annunciator in the control room activates and the SPDS "RAD RELEASE" box turns red.

The radiation monitor provides seven decade monitoring. The lowest decade is established below the normal background of the monitored system. The high-radiation alarm setpoint is based upon the normal, full-power, operating background but is considerably less than the upper range of the detector. Table 11.5-1 lists the specific data pertaining to the range of the monitoring equipment.

Other monitor instrumentation in the control room includes an annunciator for monitor failure and a continuous strip chart recorder for providing an historical record.

The sample portions of the Unit 2 and Unit 3 service water radiation monitor systems are different and are described as follows:

The Unit 2 process sample flow begins at two scoop tubes inserted into the Unit 2 service water standpipe and ends with a return connection to the standpipe (see Drawing M-3496). An eductor is used to move the process sample water from the scoop tubes to a receiver tank, through the process radiation detector bowl, through the eductor itself and then return it to the standpipe. The eductor is driven using domestic water.

The sample system includes the following:

A. Low service water sample flow annunciation in the control room;

B. Flow site glass; and

C. Manual grab sample valves.

The low service water sample flow annunciation is used to identify inadequate sample flow. This usually indicates the system is clogged and requires flushing.

Manually operated grab sample valves are provided for obtaining samples. Samples may be required when the radiation monitor alarms on high-radiation or at times when the monitor is inoperable.

The Unit 3 process sample flow begins at a scoop tube inserted into the Unit 3 service water standpipe and ends with a return connection to the standpipe (see Drawing M-3486). A sample (return) pump is used to move the process sample water from the scoop tube to a receiver tank, through the pump itself, to the process radiation detector bowl and then return it to the standpipe.

The sample system includes the following:

A. Receiver tank low level/return pump failure annunciation in the control room;

B. Flow site glass; and

C. A grab sample station with an automatically operated solenoid valve.

The receiver tank low level annunciation is used to identify inadequate sample flow. This usually indicates the system is clogged and requires flushing.

When the radiation monitor alarms on high-radiation, a solenoid operated grab sample valve is automatically opened for a set period of time. This allows part of the sample flow leaving the process radiation detector bowl to flow into a container. This grab sample solenoid valve also has local, manual control for obtaining samples at any time.

background but is considerably less than the upper range of the detector. Table 11.5-1 lists the specific data pertaining to the sensitivities and accuracies of the monitoring equipment.

11.5.2.8 Liquid Radioactive Waste Discharge Monitoring System

Liquid radioactive waste is occasionally discharged to the environment. Liquid releases are made on a batch basis from the waste surge tank, floor drain sample tank or portable waste treatment system tank which has been isolated so that no additional water may be inadvertently discharged. The batch is processed below the maximum concentration given in 10 CFR 20 and discharged into the circulating water leaving the plant. The tank is recirculated to assure a representative sample and then analyzed for gamma activity and H-3, Fe-55, Sr-89 and Sr-90 activity concentrations are estimated based on the gamma activity to determine a discharge rate to ensure that 10 CFR 20 limits are not exceeded. Further dilution occurs when the water leaves the discharge canal and enters the river.

The radwaste discharge monitor (see Figure 11.5-7 and Drawing M-3478) is an offline sampling type monitor. When a discharge is made, the radwaste operator valves in the monitor and energizes the instrumentation. Requirements for continuing liquid discharge without the radwaste discharge monitor are specified in the ODCM.

The process liquid monitor incorporates one channel of instrumentation consisting of the following components:

A. An NaI(Tl) gamma scintillation process detector;

B. An NaI (Tl) gamma scintillation background detector;

C. A float-type flow indicator/switch;

D. High-radiation annunciation in the control room;

E. Low receiver tank level annunciation in the radwaste control room;

F. High receiver tank level annunciation in the radwaste control room;

G. Low-flow annunciation in the radwaste control room;

H. Monitor failure annunciation in the radwaste control room;

I. A continuous strip chart recorder; and

J. A grab sample station with an automatically operated solenoid valve.

The water sample is taken from the discharge to the river line, fed through the process detector, a grab sample valve, and into a receiver tank. Tank level is maintained between high and low setpoints by a discharge pump which feeds the sample back into the discharge line.

The process and background monitor radiation signals are fed through local interface boxes (IB-2) to a DAM in the radwaste control room. The DAM accumulates the count data for each detector and calculates the count rate through background subtraction. The DAM is operated from a control terminal in the main control room which feeds computer information to a strip chart recorder. The DAM

provides local indication and alarms and radwaste control room panel annunciation. Both the discharge pump and the grab sample valve have local, manual control.

The system, which has been designed to maintain a constant flow and a preset band of tank level, provides annunciation in the radwaste control room to alert the operator of any deviations from the normal operating status. A low-level annunciation is received if the discharge pump continues to run below the low setpoint. Low-flow annunciation will be received if the sample flow drops below the prescribed setpoint. If the high-radiation setpoint is exceeded, annunciation is received and a grab sample is automatically obtained by a solenoid valve which opens for a set period of time to allow part of the sample flow leaving the detector to flow into a container. In addition, a loss of monitor power, loss of a monitor radiation signal, or loss of a high-radiation signal results in a monitor failure annunciation.

The procedures for liquid radioactive waste discharge to the river, along with the monitor failure, low flow, high and low receiver-tank level, and high-radiation annunciation in the radwaste control room, will assure that the liquid radioactive waste discharges are monitored properly. This assures that the activity in the water leaving the discharge canal and entering the river is within federal limits for nonoccupational use.

The use of applicable procedures assures that the valve lineup for the discharge of liquid radwaste is correct. After initiating the discharge the lineup can be further verified by noting the level drop in the waste surge tank, floor drain sample tank or portable waste treatment system tank.

11.5.2.9 Isolation Condenser Vent Monitoring System

Monitoring of gross radiation is provided at the isolation condenser vent line by two channels of instrumentation. Each channel is powered from one of the RPS buses. The amplifiers associated with the detectors are logarithmic and have ranges of 10^{-2} to 10^{3} mrem/hr and 1 to 10^{5} mrem/hr, respectively. The detectors are identical to those used for the area radiation monitoring system addressed in Section 12.3. The output of each monitor is indicated and recorded in the control room. When the gross activity in the condenser vent line reaches a preset level (indicating tube leaks in the isolation condenser) an alarm is sounded. Failure of the monitoring equipment, either upscale or downscale, is annunciated.

The isolation condenser vent monitor is of sufficient range and sensitivity to detect radiation increases in the condenser which indicate a tube leak. The alarm level is set sufficiently above background to be representative of a leak. Since the background is continuously recorded, any abnormal increase is noted by the operator. Following an alarm, the operator may isolate the condenser.

11.5.2.10 Process Liquid Sampling System

The process liquid sampling system is provided in three parts at three locations. The process liquid sampling system is addressed in more detail in Section 11.2.

11.5.2.11 Process Gaseous Sampling System

The process gaseous sampling system is addressed in Section 11.3. Hydrogen analyzers are a part of the control instrumentation monitoring the hydrogen concentration of the off-gas downstream of the off-gas condenser. The hydrogen addition requires a corresponding oxygen addition such that there is minimal, if any, residual hydrogen in the off-gas downstream of the hydrogen recombiners. Oxygen analyzers are also used in monitoring and control of the gaseous systems. The hydrogen water chemistry system is addressed further in Section 5.4. Drawings M-178, M-179, M-421 depict the process sampling in the off-gas system. Drawings M-43, Sheet 5 and M-371, Sheet 5 show the off-gas hydrogen and oxygen analyzer flow and sample conditioning.

11.5.2.12 High Radiation Sampling System

The HRSS is used to sample a few streams during normal operation and numerous additional points following an accident. The HRSS system is addressed in more detail in Section 9.3.2.

11.5.2.13 Linear Monitoring Subsystem (Flux Tilt Monitor)

The air ejector off-gas radiation monitor contains a third channel which uses a linear count rate meter. This channel is provided to give a more sensitive indication when flux tilting is used to assist in locating leaking fuel assemblies. Currently, flux tilting is not being used (see Section 11.5.2.2).

11.5.3 Effluent Monitoring and Sampling

The effluent monitoring and sampling pertains to the liquid radwaste monitoring and sampling and to the gaseous radwaste monitoring and sampling as it relates to the discharge of radioactive effluent from the station.

11.5.3.1 Liquid Effluent Monitoring and Sampling

The liquid radwaste discharge stream, the Unit 2 service water system, and the Unit 3 service water system are all monitored by an Eberline radiation monitor and sampler. The Unit 2 reactor building closed cooling water system and the Unit 3 reactor building closed cooling water system are monitored by the original GE-installed monitoring system. Details of the monitoring instruments are addressed in Section 11.5.2. Additional details for the sampling are addressed in Section 11.2. For the discharge of liquid radwaste from the station, the tank of liquid for discharge to the river must be sampled and analyzed such that a discharge flowrate can be determined before discharge of the liquid begins. The

Table 11.5-1

RADIATION MONITORING SYSTEMS EQUIPMENT PARAMETERS

Radiation Monitoring System	General Monitor Type	Number of Channels	Detector Type	Range	Indicator and Alarm Location	Radiation Alarm Types	Equipment Alarm Types	Recorder		Sampling	Logic
								Type	Location		
Main Steam	Area	4	Ionization chamber	0 to 10^6 mrem/hr	Main control room	High and high-high	Downscale	Dual pen	Main control room	In-line	mechanical vacuum pump trip
Air-Ejector (Off-Gas)	Radioactive gas	2	Ionization chamber	0 to 10^6 mrem/hr	Main control room	High and high-high	Downscale	Dual pen	Main control room	In-line	Off-gas isolation (after 15-min delay)

Table 11.5-1 (continued)

RADIATION MONITORING SYSTEM EQUIPMENT PARAMETERS

Radiation Monitoring System	General Monitor Type	Number of Channels	Detector Type	Range	Indicator and Alarm Location	Radiation Alarm Types	Equipment Alarm Types	Recorder		Sampling	Logic
								Type	Location		
Service Water Effluent	Liquid effluent	1	Scintillation	10^1 to 10^6 cps (10^{-6} to 10^{-2} µCi/cc)	Main control room	High and high-high	Monitor failure, receiver tank low level,[1] return pump failure[1]	Strip chart	Main control room	Offline	
Radwaste Liquid	Liquid effluent	1	Scintillation	10^1 to 10^6 cps	Main control room	Alert (2) High	Downscale, loss of power	Dual pen strip chart	Main control room	Offline	
					Radwaste control room	High			Radwaste control room		
Isolation condenser	Area	2	G-M tube	10^{-2} to 10^1 and 1 to 10^5 mrem/hr	Main control room	High	Downscale	Multi-point (with ARMs)	Main control room	In-line	

Notes:

1. Receiver tank low level and return pump failure alarms for Unit 3 only. Unit 2 has a low service water sample flow alarm.
2. Software driven alarms from the Eberline Control Terminals. Refer to printer for monitor identification

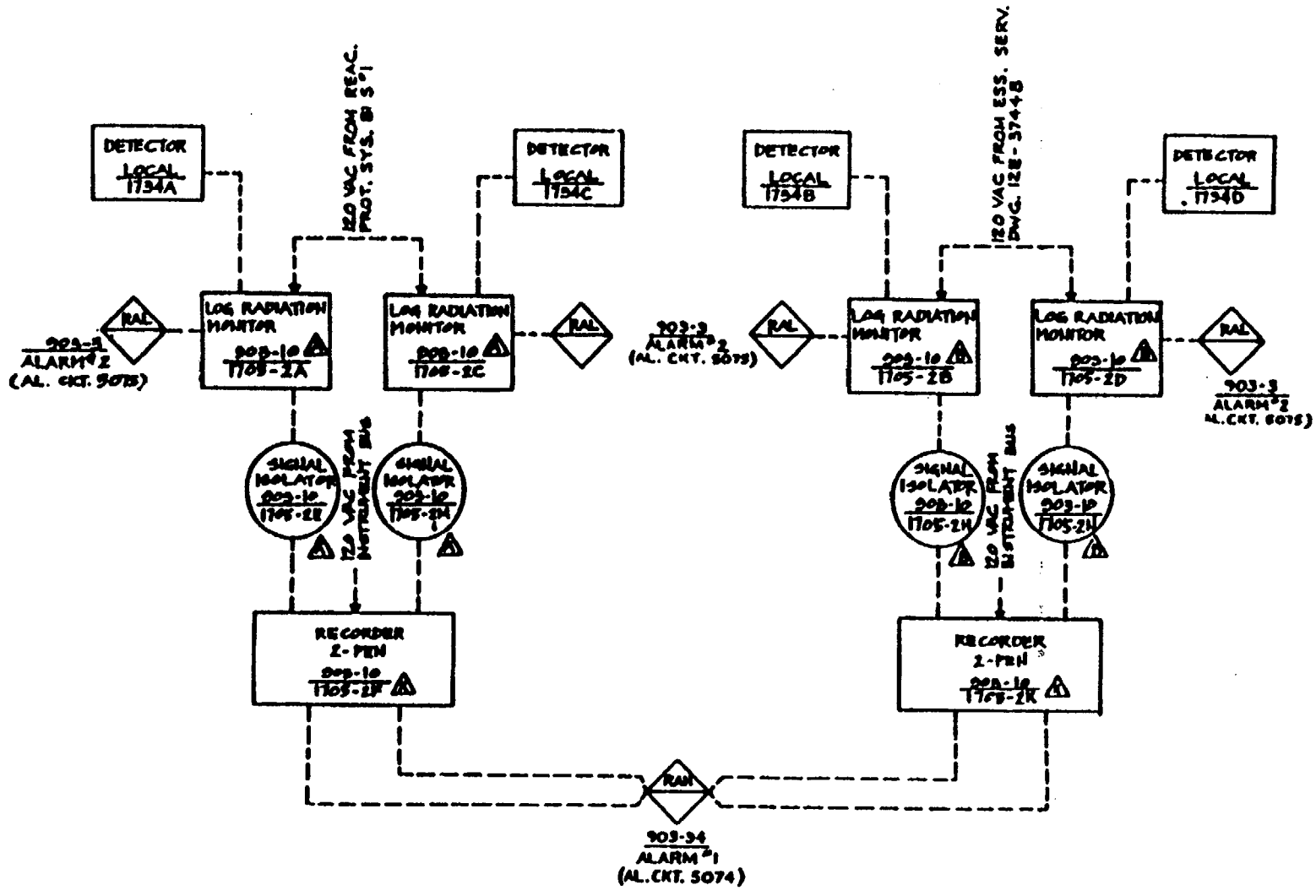

UFSAR REVISION 4, JUNE 2001

DRESDEN STATION UNITS 2 & 3
UNIT 3 MAIN STEAM LINE RADIATION MONITORING SYSTEM
FIGURE 11.5-1

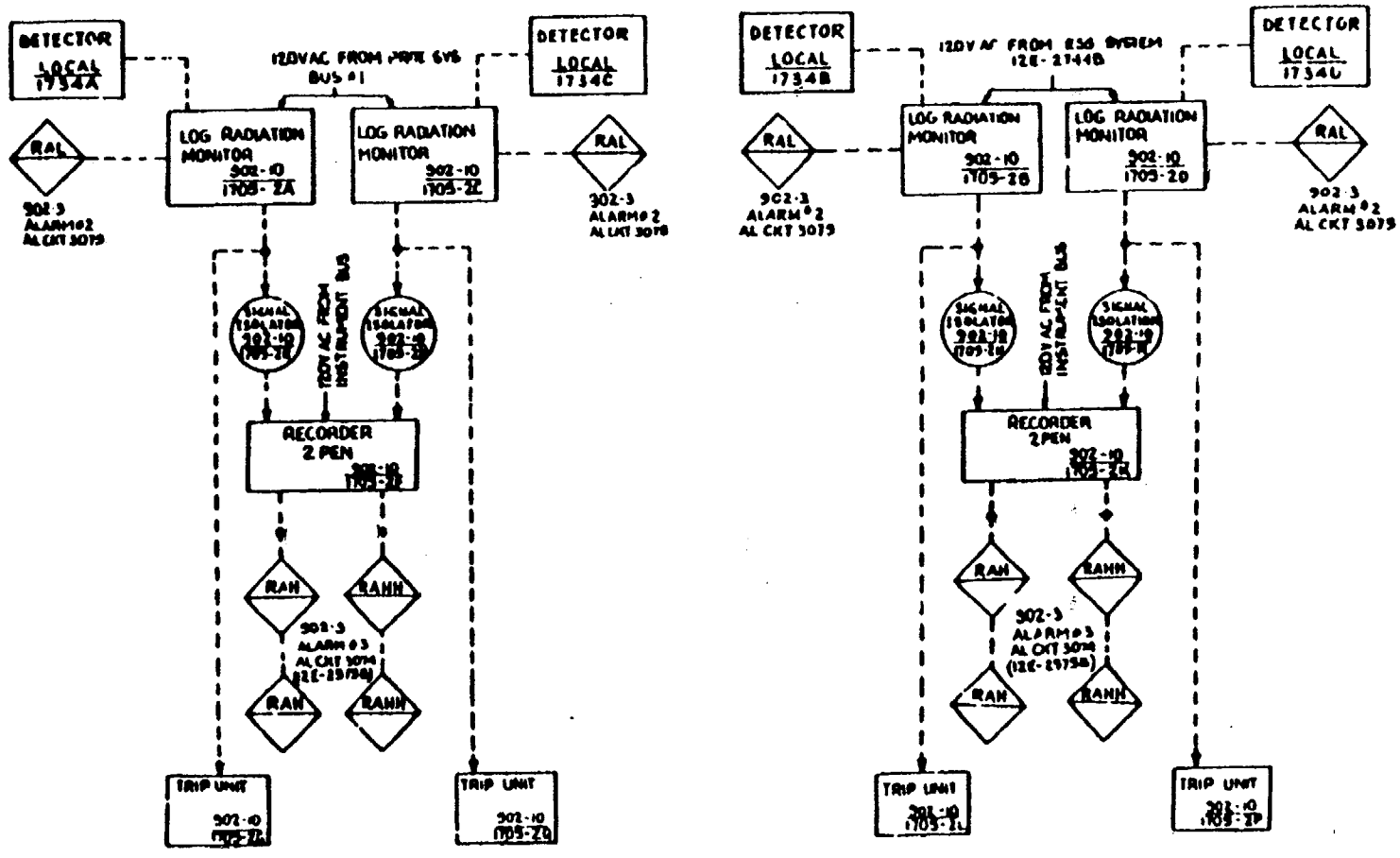

UFSAR REVISION 4, JUNE 2001

DRESDEN STATION
UNITS 2 & 3

UNIT 2 MAIN STEAM LINE RADIATION MONITORING SYSTEM

FIGURE 11.5-2

12.0 RADIATION PROTECTION
TABLE OF CONTENTS

12.0 RADIATION PROTECTION
LIST OF FIGURES

Figure

DRAWINGS CITED IN THIS CHAPTER*

*The listed drawings are included as "General References" only; i.e., refer to the drawings to obtain additional detail or to obtain background information. These drawings are not part of the UFSAR. They are controlled by the Controlled Documents Program.

DRAWING*	SUBJECT
M-1	Property Plan
M-7	General Arrangement, Sections “A-A” and “B-B”
M-8	General Arrangement, Sections “C-C” and “D-D”

12.0 RADIATION PROTECTION

The protection of operating personnel from radiation emanating from process equipment, from radioactive materials present on equipment externals in work areas, or from airborne radioactive material particles and gases is accomplished by a combination of the design of the facility's shielding structures, selection and use of appropriate radiation monitoring instrumentation, and the development and implementation of control standards and procedures. The purpose of the following sections is to provide a brief summary of these radiation protection aspects of these units. The shielding and instrumentation are described in greater detail in Sections 11.5, 12.3, and 12.5. A study contained in Appendix 12A details dose rates throughout the plant following a postulated accident.

12.1 ENSURING THAT OCCUPATIONAL RADIATION EXPOSURES ARE AS LOW AS REASONABLY ACHIEVABLE

12.1.1 Policy Considerations

This subsection addresses the management policy and organizational structure related to implementation of the "as low as reasonably achievable" (ALARA) program to ensure that occupational exposure for station personnel are maintained ALARA. The ALARA program is part of the station radiation protection program.

12.1.1.1 Management Policy

It is the policy of EGC to maintain the occupational dose equivalents to the individual and the sum of dose equivalents received by all exposed workers to levels that are as low as reasonably achievable (ALARA). This ALARA philosophy is implemented in a manner consistent with station operating, maintenance, and modification requirements, taking into account the state of technology, the economics of improvements in relation to the state of technology, the economics of improvements in relation to benefits to the public health and safety, and other societal and socioeconomic considerations, and in relation to utilization of nuclear energy and licensed materials in the public interest.

EGC's commitment to this policy is reflected in the EGC ALARA program, in station design, in careful preparation and review of station radiation protection operating and maintenance procedures, and in review of equipment design to incorporate the results of operating experience.

It is the policy of EGC to have all levels of management strongly committed to radiation protection and, specifically, to maintain occupational radiation exposures ALARA. Also, it is recognized that each worker must take personal responsibility for actions necessary to implement successful dose reduction measures.

12.3 RADIATION PROTECTION DESIGN FEATURES

This section describes plant design features used to ensure that occupational radiation exposures resulting from the radiation sources within the plant meet the "as low as reasonably achievable" (ALARA) program objectives described in Section 12.1. These features include shielding, ventilation systems, and radiation monitoring instruments.

12.3.1 Facility Design Features

When Dresden Units 2 and 3 were designed, the structures were shaped and arranged on the site to conform to the locations of the previously existing plant (Unit 1), water supply, roads, and railroad. The structures were also arranged to provide the best layout for the equipment. Safety requirements also were met with respect to circulation of contaminants and protection from radiation. Drawing M-1 is a plot plan showing the arrangements of the structures.

Additional information on the design features of Dresden Station that protect personnel from radiation exposure and minimize radiation damage to plant equipment can be found in the following:

A. Sections 11.1 through 11.4 describe radioactive waste processing;

B. Section 11.5 addresses process and effluent radiation monitoring;

C. Section 12.5.3.4 addresses control of access to radiation areas; and

D. Section 12.5.2 describes the radiochemical laboratory facilities.

12.3.2 Shielding

Normal operating conditions determine the major portion of the shielding requirements. Two notable exceptions are the control room, where shielding is determined by the radiation levels produced during the loss-of-coolant accident (LOCA), and the shutdown cooling system, where shielding is determined by shutdown conditions.

12.3.2.1 Design Basis

The basis for the design of the radiation shielding is in compliance with the requirements of 10 CFR 20, which describes the limits of occupational radiation exposures. Compliance with these regulations is achieved in part through shield design, which is based upon occupancy requirements in various areas. A list of generalized occupancy requirements and attendant radiation dose rates are presented in Table 12.3-1. The duration of expected operating personnel occupancy in various areas of each unit was obtained from experience during operation of Dresden Unit 1 and other similar nuclear-powered units.

on the same structural concrete that supports the reactor vessel. This shield is cooled on both surfaces by circulating air from the drywell cooling system.

The pipes leaving the vessel at elevations below the top of the shield wall penetrate the wall. The penetrations in the vicinity of the core utilize removable shield plugs which fit around the penetrating pipe. The plugs are provided in order to allow access to the pipe welds for purposes of inservice inspections. The Dresden plugs are two 9-inch thick steel plates attached to the shield wall by two 1-7/16-inch diameter vertical hinges, with both halves locked in place by a 1-7/8-inch diameter locking pin. Recirculation piping penetrates this annular shield wall around the reactor vessel. Streaming through these penetrations by radiation from the core is limited by shielding located within the reactor vessel. These penetrations are also provided with removable shielding sections at the annular shield so that access is available for inspection of the connections of recirculation piping to the reactor vessel. The region that houses the control rod drives is shielded against radiation from the recirculation piping. This piping constitutes a radiation source during shutdown as a result of crud buildup.

During reactor operation, the reactor shield wall serves as a thermal shield to protect the containment shield wall outside the drywell from thermal damage. During shutdown, this shield also serves to protect personnel in the drywell from the gamma radiation from the core and the reactor vessel.

12.3.2.2.2 Containment Shield Wall

The primary containment vessel for each reactor is enclosed completely in a reinforced concrete structure (an integral part of the reactor building) having a variable thickness of from 4 to 6 feet. This structure is called the containment shield wall. See Drawings M-7 and M-8. In addition to serving as the basic biological shielding for the containment system, this concrete structure also provides a major mechanical barrier for the protection of the containment vessel and the reactor system against potential missiles generated external to the primary containment. It also serves as a backup for the steel drywell wall in resisting jet forces. Additional information on missile protection is contained in Section 3.5. Jet forces and other effects of pipe breaks are described in Section 3.6.

Bedrock is used as the main support for the concrete containment shield wall which is structurally designed to handle the loads of floors, equipment, and the higher elevations of the shield itself. Reinforcing steel is used to maintain structural integrity under the design basis accident and seismic loading.

Penetrations through the concrete containment shield wall are designed so that they are not aimed directly at the core or major items of equipment in the drywell. In addition, they are either terminated in shielded cubicles or are shielded with steel flanges to reduce radiation levels in accessible areas.

12.3.4.3 Design Evaluation

Area radiation monitor detectors are distributed (Tables 12.3-4 and 12.3-5) in such a way that radiation detection coverage is provided in most areas where personnel may be required to work for extended periods. Increases in radiation above some preselected level annunciate an alarm. The ranges and sensitivities of the equipment are sufficient to detect increases in radiation level above background level.

It has been determined from shielding calculations and from operating experience on other BWR plants that four ranges of monitoring instrumentation sensitivity are adequate for the radiation areas selected for location of area monitors. These ranges are as follows:

A. 10 to 10^6 mrem/hr (low-low sensitivity);

B. 1.0 to 10^4 mrem/hr (low sensitivity);

C. 0.1 to 10^3 mrem/hr (medium sensitivity); and

D. 0.01 to 10^2 mrem/hr (high sensitivity).

A low-low sensitivity monitor is used for one of the monitors on the refueling floor area. This instrument is intended for post-accident (refueling accident) radiation measurements for use in recovery. Since radiation levels could potentially be very high, a low-low sensitivity instrument is used. More sensitive instruments are also located on the refueling floor to provide capability to ascertain that expected low background radiation does exist.

The other three ranges of instruments are utilized in various areas to assure detection capability as low as expected background radiation levels and up to unlikely maximum levels. Most instruments are high sensitivity monitors since they are located in areas with very low background but with potential for moderate radiation levels. Several instruments are medium sensitivity monitors located in low background areas. A few are low sensitivity monitors in higher background areas (TIP cubicle, torus area, HPCI cubicle).

Local alarms at the detector locations were selected on the basis of personnel safety. In areas normally occupied by personnel, local alarms are installed.

12.3.4.4 Reactor Building Crane Monitor

The reactor building crane monitor is designed to enable the crane operator to monitor refueling floor radiation levels from the crane cab. A sensor/converter unit (Geiger-Mueller tube) is mounted on the overhead crane. An indicator/trip unit is mounted in the crane cab. The monitor has a range of 0.1 to 1000 mrem/hr. High radiation and downscale alarms are provided to the crane operator. The downscale alarm function alerts the crane operator of monitor failure. The upscale alarm function serves to alert the crane operator of elevated dose readings on the refueling floor.

Table 12.3-4

AREA RADIATION MONITORS — DETECTOR LOCATION AND RANGE

UNIT 2

Station Number	Detector Location	Range (mrem/hr)	Auxiliary Unit and Local Alarm
1	Refueling Floor Low Range	0.1— 1000	Yes
2	Refueling Floor High Range	10— 10^6	
3	Refueling Floor Equipment Hatch	0.01— 100	Yes
4	New Fuel Storage Area	0.1— 1000	Yes
5	Isolation Condenser Area	1.0— 10^4	
6	CRD and Repair Room	0.1— 1000	
7	RWCU Area	0.01— 100	Yes
8	Vessel Instrument Rack Area	0.01— 100	
9	TIP Cubicle	1.0— 10^4	Yes
10	TIP Drive Area	0.01— 100	
11	CRD West Module Area	0.01— 100	
12	CRD East Module Area	0.01— 100	
13	Reactor Building South Access	0.01— 100	Yes
14	East Low Pressure Coolant Injection Pump Area	0.1— 1000	
15	West Low Pressure Coolant Injection Pump Area	0.1— 1000	
16	Torus Area	1.0— 10^4	
17	HPCI Cubicle	1.0— 10^4	
18	Turbine Operating Floor Elevator Area	0.01— 100	
19	Turbine Operating Floor East End	0.01— 100	
20	Air Ejector East Area	0.01— 100	
21	Air Ejector West Area	0.01— 100	
22	Main Control Room	0.01— 100	
23	Feedwater Heater Area	1.0— 10^4	

Table 12.3-4

AREA RADIATION MONITORS — DETECTOR LOCATION AND RANGE

UNIT 2

Station Number	Detector Location	Range (mrem/hr)	Auxiliary Unit and Local Alarm
24	Feedwater Pump Area	0.01— 100	Yes
25	Auxiliary Electrical Room	0.01— 100	
26	Access Control Area	0.01— 100	
27	CRD Feed Pump Area	0.1— 1000	
28	Main Condenser Area	0.01— 100	
29	Radwaste Conveyor	0.01— 100	Yes
30	Radwaste Pump Room	0.1— 1000	
31	Radwaste Control Room	0.01— 100	Yes
32	Radwaste Storage and Shipping	0.01— 100	Yes
33	Not Used		
34	Not Used		
35	Charcoal Adsorber Vault	$1.0— 10^6$	Yes
36	Recombiner Level 1	0.01— 100	
37	Recombiner Level 2	0.01— 100	

Table 12.3-5

AREA RADIATION MONITORS — DETECTOR LOCATION AND RANGE

UNIT 3

Station Number	Detector Location	Range (mrem/hr)	Auxiliary Unit and Local Alarm
1	Maximum Recycle Chemical Addition Room	0.01—100	
2	Maximum Recycle HVAC Area	0.01—100	
3	Refueling Floor Low Range	0.1—1000	Yes
4	Refueling Floor High Range	10—10^6	
5	Refueling Floor Equipment Hatch	0.01—100	Yes
6	Isolation Condenser Area	0.1—1000	
7	RWCU System Area	0.01—100	Yes
8	Vessel Instrument Rack Area	0.01—100	
9	TIP Cubicle	1.0—10^4	Yes
10	TIP Drive Area	0.01—100	
11	West CRD Module Area	0.01—100	
12	East CRD Module Area	0.01—100	
13	East Low Pressure Coolant Injection Pump Area	0.1—1000	
14	West Low Pressure Coolant Injection Pump Area	0.01—100	
15	Torus Area	1.0—10^4	
16	HPCI Cubicle	1.0—10^4	
17	Turbine Operating Floor West End	0.01—100	
18	Air Ejector East Area	0.01—100	
19	Air Ejector West Area	0.01—100	
20	Standby Gas Treatment System	0.01—100	
21	Condensate Demineralizer Area	0.01—100	
22	Unit 2/3 Cardox System Tank Area	0.1—1000	
23	Feedwater Heater Area	0.1—1000	
24	Feedwater Pump Area	0.01—100	Yes
25	CRD Feed Pump Area	0.1—1000	
26	Main Condenser Area	0.01—100	
27	Charcoal Adsorber Vault	1—10^6	Yes

Table 12.3-5 (Continued)

AREA RADIATION MONITORS — DETECTOR LOCATION AND RANGE

UNIT 3

Station Number	Detector Location	Range (mrem/hr)	Auxiliary Unit and Local Alarm
28	Recombiner Level 1	0.01—100	
29	Recombiner Level 2	0.01—100	
30	Filter Building Level 1	0.01—100	Yes
31	Filter Building Level 2	0.01—100	Yes
32	Filter Building Level 3	0.01—100	Yes
33	Concentrator Instrument Rack Area	0.01—100	
34	Maximum Recycle Pump Room	0.01—100	
35	Maximum Recycle Distillate Tank Area	0.01—100	
36	Maximum Recycle Demin. Instrument Rack	0.01—100	

selection of protective clothing to be worn. In all cases, radiation protection personnel shall evaluate the radiological conditions and specify the required items of protective clothing.

12.5.3 Procedures

The radiation protection procedures and policies are designed to provide protection of personnel against exposure to radiation and radioactive materials in a manner consistent with applicable regulations. It is the policy of EGC to maintain personnel radiation exposure within the regulations, and further, to reduce such exposure to as low as reasonably achievable via the ALARA program. Individuals are trained to minimize their exposure consistent with discharging their duties and are responsible for observing rules adopted for their safety and that of others.

Radiation protection personnel evaluate radiological conditions and establish the procedures to be followed by all personnel. They ensure that all RP program elements are in compliance with all applicable regulations and that the required radiation protection records are adequately maintained.

Training of operations, maintenance, support, and technical personnel, as well as contractors, in radiation protection principles and procedures is completed before the beginning of their work assignments.

Section 12.1.3 addresses radiation protection provisions of other station procedures.

12.5.3.1 Personnel Monitoring

The official and permanent record of accumulated external radiation exposure received by each individual is normally obtained from the interpretation of the thermoluminescent dosimeter (TLD). Secondary dosimeters provide day-by-day indication of external radiation exposure.

All employees, contractors, and visitors are issued and required to wear appropriate dosimetry when entering, working in, or visiting radiation areas. In accordance with station procedures.

Under normal conditions each person leaving the plant is required to pass through a portal monitor in the main access facility. Multiple portal monitors are installed to facilitate egress during times of high traffic, such as end of normal workday.

12.5.3.2 Visitors Monitoring

All visitors to the station who enter a radiation area are monitored by appropriate dosimetry or are provided with an escort having such monitoring devices.

12.5.3.3 Bioassay and Medical Examination Program

EGC provides whole body radiation counting service for employees and contractors at Dresden Station in compliance with 10 CFR 20 requirements and in accordance with station procedure.

Special medical examinations are given for authorization to use respiratory equipment (e.g., face masks for areas with airborne radioactive contamination). These examinations (or medical physicals) are performed to meet the requirements of 10 CFR 20.

12.5.3.4 Access Control

Plant areas can be classified as radiation areas, high radiation areas, airborne radioactivity areas, or radioactive materials areas. Areas so classified are posted to warn personnel approaching the area from any direction. Access to posted areas for all work is controlled by plant procedures and by the use of the station radiation work permit (RWP) program.

Control of access to radiation areas is provided through the detailed design of equipment location, shielding, access doors, and passageways. In addition, procedural control is achieved through administrative control of radiation exposures and the control of the concentrations of radioactive material concentration present in various areas of each unit structure. Commonwealth Edison has extensive experience in the application of access control principles.

Accessible areas in which the radiation levels could result in dose rates greater than 100 mrem in 1 hour (at 30 cm from the radiation source) are posted as high radiation areas. Access to these areas is controlled with barriers which prohibit unauthorized entry. Administrative controls are in the Technical Specifications.

12.5.3.5 Radiological Surveys

Radiation surveys of plant areas are performed for a number of reasons, including:

A. Establishment of representative radiation levels;

B. Identification and characterization of contaminated areas;

C. Verification of clean areas;

D. Evaluation of airborne radioactivity concentrations; and

E. Providing pre-job and post-job data as part of the ALARA program.

F. Identification of localized "hot spots" and areas where radiation streaming may occur.

Routine survey frequencies for a given plant area are based on considerations such as area occupancy, the potential for dose rate change due to potential contamination, and the extent of these considerations. Survey schedules are

Dresden Station

Updated Final Safety Analysis Report

VOLUME 7

Exelon Nuclear

Exelon Generation Company

12A.4.7 Radiation Zones in Figures 12A-7A - 12A-7F

The high pressure coolant injection (HPCI)/diesel generator building was zoned on the basis that its atmosphere is the same as that of the reactor building and that there exists potential for contaminating unshielded condensate piping. In the NLB scenario, the reactor steam used to drive the HPCI turbine could have a large quantity of noble gases in addition to the 0.2% carryover of halogens from the reactor water. The personnel access way into the HPCI building has both a partially shielded and unobstructed view of a 16-inch LPCI line in the Unit 2 reactor building.

12A.5 Addendum A-Radiation Environment At Sampling Stations

A.1 Introduction

Closely coupled to the objectives of the post-accident zone maps generated in this document are the concerns of Item 2.1.8.a of NUREG-0578, which involves post-accident sampling capability. It requires a review of sampling capability to insure that a post-accident sample can be obtained within an hour post accident without any individual exposures in excess of 3 rem to whole body and 18-3/4 rem to the extremities. The two types of samples in question are a primary coolant sample and primary containment atmosphere.

Refer to the discussion in Section 12A.1 for the applicaiton of these values to Siemens fuel.

A.2 Results

At Dresden Units 2 and 3, the primary coolant sample sinks are located on the main floor (elevation 561') of the reactor building and the drywell air sampling racks are on the mezzanine floor (elevation 538') of the reactor building. As presently designed, an attempt at post-accident sampling would probably start with an entry into the reactor building through the airlocks. Upon entering either reactor building one would encounter potentially contaminated CRD equipment. A contaminated 4-inch CRD sparger (line 0308) can read 300 rad/hr at 10 feet at 1 hour. Dose rates due to radionuclides uniformly spread throughout the reactor building and refueling floor atmosphere are on the order of 1100 rad/hr in large open areas, of which approximately 800 rad/hr is due to beta particles and 300 rad/hr is due to gamma radiation. Traveling through the reactor building exposes one to varying gamma whole body dose rates depending on the size of the area confining the airborne cloud. The beta dose rate is insensitive to these considerations. The value 1100 rad/hr at 1 hour can conservatively be applied throughout the reactor building.

An individual taking a primary liquid sample could be exposed to a dose rate of 12 rad/hr at 3 feet from a typical unshielded sample line. An unshielded 10-cc vial of primary coolant could have a contact dose of 2000 rad/hr which could be reduced to 700 mrad/hr by 3 inches of lead, all at 1 hour.

An individual taking a primary containment atmospheric sample could be exposed to 8 rad/hr at 3 feet from a typical sample line. A 10-cc vial at one hour could have a contact dose rate of 1300 rad/hr and one of about 1 rad/hr through 3 inches of lead. The Unit 3 containment air sampling panel has an extra source of radiation. It is in close proximity to a 14-inch core spray line which can read 2300 rad/hr at 10 feet 1 hour post-accident.

It is obvious from the dose rates quoted above that it is not feasible for an individual to enter the reactor building, obtain either type of sample and leave the reactor building while still receiving less than 3 rem whole body and 18 3/4 rem to the extremities.

12A.6 Addendum B-Radiation Environment At Radiation Monitors

B.1 Introduction

Closely coupled to the objectives of the post-accident zone maps generated in this document are the concerns of Item 2.1.8.b of NUREG-0578, which involves functioning of radiation monitors in the post-accident environment.

Refer to the discussion in Section 12A.1 for the application of these values to Siemens fuel.

B.2 Results

Particulate and iodine monitors 2/3 1788 A and B and noble gas monitors 2/3 1789 A and B are located on the fan floor at elevation 581'4". They are unshielded at present. The radiation field has been conservatively calculated to be 2.33 rad/hr at 1 hour and 1.36 rad/hr at 1 week. An erroneous readout due to refueling floor shine would indicate that the reactor building has not isolated and the short stack is an uncontrolled release point.

Radiation monitor 2-1774 is located in the gas sample house. Examination of the property plot indicated that the stack is approximately 225 feet (69 meters) from the refueling floor using the shortest path. The slant distance would be greater since the monitor is at the back of the radwaste building and some shielding would be provided by the floors of the turbine placing the stack monitor 69 meters on the ground level from the refueling floor unshielded would yield a dose rate of 0.6

rad/hr at 1 day from the refueling floor shine in the line break scenario. This is well below the 25 rad/hr limit of the proposed monitor.

12A.7 Addendum C-Doses to the Control Room, Support Centers and General Assembly Areas

C.1 Introduction

Several areas onsite have been identified as requiring continuous habitability or pre-evacuation occupancy. These include:

A. Control room;

B. Technical support center (TSC);

C. Onsite operational support center (OOSC);

D. Generating Station Emergency Plan (GSEP) assembly areas;

E. Gate house;

F. Visitors' center; and

G. Offsite emergency center

The first four of these are addressed below to provide support for the January 1, 1980, response to NUREG-0578. The remaining three will be considered at a later date.

The development of integrated doses on a case-by-case basis was deemed to be impracticable. As an alternate, a set of normalized integral curves were developed for representative sources and representative shielding thicknesses. These allowed an integrated dose to be approximated based on the known dose rate at 1 hour post-accident.

C.2 Result

The results of the investigation are discussed below and are given in Table 12A-2.

Refer to the discussion in Section 12A.1 for the application of these values to Siemens fuel.

12A.9 Addendum E-Recommendations

None.

Page Intentionally Left Blank

13.0 CONDUCT OF OPERATIONS

13.1 ORGANIZATIONAL STRUCTURE

13.1.1 Corporate Management and Technical Support Organization

EGC's corporate organization and its functions and responsibilities are described in Section 1.0 of Quality Assurance Program Topical Report CE-1-A,[1] as revised and filed with the NRC. Organizational charts within this report reflect the current corporate structure and the departments which provide technical support for operation and backup support. Where appropriate, these services are provided by outside groups through contractual agreements.

13.1.2 Plant Operating Organization

The overall organization of Dresden Station is in accordance with the Quality Assurance (QA) Manual (Quality Requirement 1.0).[2] Exhibit 1 of Quality Assurance Program Topical Report CE-1-A[1] shows the line of responsibility from the Chairman and Chief Executive Officer down through the station staff.

13.1.3 Plant Personnel Responsibility and Authority

The basic job functions of Plant positions are described in QA Topical Report CE-1-A and Station Administrative Procedures.

13.1.4 Deleted

13.1.5 Deleted

13.1.6 Deleted

13.1.7 Operating Shift Crews

Minimum shift manning requirements are listed in Technical Specification Section 6.2 and in the GSEP, Section 4.4.

13.1.8 Qualifications of Nuclear Plant Personnel

The station positions requiring possession of an SRO License are described in Section 6.0 of the Technical Specifications.

Qualifications of the station management and operating staff meet minimum acceptable levels as described in ANSI N18.1-1971, with exceptions and clarifications as noted in Section 6.0 of the Technical Specifications.

13.1.9 References

1. Quality Assurance Program Topical Report CE-1-A, "Quality Assurance Program for Nuclear Generating Stations," (current revision).

2. Quality Assurance Manual, (current revision).

13.2.1.2.5 Training for Chemistry Personnel

Chemistry training will provide SAT-based training to chemistry personnel in accordance with 10 CFR 50.120. Chemistry training will comply with the SAT-based training requirements by maintaining accreditation.

13.2.1.2.6 Training for Non-licensed Operators

Non-licensed operator training will provide SAT-based training to non-licensed operator personnel in accordance with 10 CFR 50.120. Non-licensed operator training will comply with the SAT-based training requirements by maintaining accreditation.

13.2.1.2.7 Training for Engineering Support Personnel

Engineering support training will provide SAT-based training to engineering support staff in accordance with 10 CFR 50.120. Engineering support training will comply with the SAT-based training requirements by maintaining accreditation.

13.2.1.2.8 Training for Fuel Handlers

Fuel Handler Training ensures that Fuel Handlers are adequately trained in the area of systems, components, and task performances required to fulfill the duties and responsibilities of that position. Fuel handler training will provide SAT-based training to fuel handler personnel.

13.2.1.2.9 Training for Emergency Preparedness Personnel

Emergency Preparedness (EP) Training is required for all designated response personnel who may be called upon to assist in an emergency. Station personnel who could be affected by an emergency are provided with training on the Generating Station Emergency Plan (GSEP) in order to provide for health and safety of the public, including station employees, and to limit damage to the facility and property. Emergency Preparedness Training typically consist of the following topics:

A. Generic GSEP training

B. Site-specific GSEP training

C. Emergency Plan Implementing Procedures

D. Operating Experiences

13.3 EMERGENCY PLANNING

A Generating Station Emergency Plan (GSEP) has been developed which considers the consequences of radiological and non-radiological emergencies. The GSEP provides for the protection of the health and safety of the public, including EGC employees, the limitation of damage to facilities and property, and the restoration of affected facilities in the event of an emergency. The GSEP includes a site specific annex which contains additional information and guidance specific to each nuclear station.

The GSEP describes the emergency organization, including assignments of authority and responsibility. The GSEP provides for detection and evaluation of emergency situations and discusses protective measures, communications, coordination and notification of governmental authorities, document review and control, emergency preparedness assessment, and training of the participating personnel. Drills and Exercises to ensure readiness on the part of plant personnel are defined and described within the GSEP.

13.3.1 References

1. Generating Station Emergency Plan (current revision).

2. Generating Station Emergency Plan Site Annex, Dresden Station (current revision).

13.4 REVIEW AND AUDIT

Review and Investigative Functions (committees) are established in accordance with the Quality Assurance Program. These functions include the Independent Technical Review, Plant Operations Review Committee, and the Nuclear Safety Review Board. Station Audits are performed as specified in the Quality Assurance Program described in Chapter 17.

In the event that a safety limit is exceeded, the reactor is shut down in accordance with the Technical Specifications and the conditions of shutdown are promptly reported to the Dresden Station Site Vice President or his designated alternate. Reactor operation is not resumed until authorized by the NRC. The incident receives onsite and offsite investigations and reviews pursuant to the Technical Specifications. For each occurrence, a separate report is submitted to the NRC as required by Technical Specifications and 10 CFR 50.73.

Any reportable occurrence is promptly reported to the Site Vice President or his designated alternate. Personnel performing the onsite review and investigative function will review investigation results and prepare a report covering the evaluation and recommendations to prevent recurrence. A separate report for each reportable occurrence is submitted to the NRC as required by Technical Specifications and 10 CFR 50.73.

13.4.1 Plant Operations Review Committee

Personnel participating on the Plant Operations Review Committee are responsible for reviewing a variety of activities and documents as specified in the Quality Assurance Program. In accordance with Quality Assurance Program, certain of these reviews are reviewed by the Nuclear Safety Review Board.

13.4.2 Nuclear Safety Review Board

Personnel participating on the Nuclear Safety Review Board are responsible for reviewing a variety of documents as specified in the Quality Assurance Program.

13.5 PLANT PROCEDURES

The procedure manuals for Dresden Units 2 and 3 provide procedures and surveillances for administration, operation, and maintenance of the facility. Procedures and surveillances are reviewed periodically and revised as necessary in light of operating experience and plant modifications. Station procedure designations and categories are shown in Table 13.5-1.

Station procedures are identified by discipline and by departmental responsibility. Descriptions of the types of departmental procedures and the purposes for which they are implemented are described in this section.

Procedures call for suspension of any potentially unsafe operation and for investigation by station management of any incident resulting in unsafe operation. Appropriate authorities will be notified, and existing procedures will be changed or new procedures added to prevent a recurrence of the incident or occurrence of similar incidents.

With only a few exceptions, acronyms for procedure identification normally begin with the letter "D" for Dresden Station.

13.5.1 Administrative Procedures

Administrative Procedures (DAPs) describe the station organization and position responsibilities, establish station policy, supplement the requirements and procedures of the Quality Assurance Manual, implement the requirements of the Technical Specifications, and supplement the electronic work control system (EWCS).

Administrative controls and managerial procedures assure that required record keeping, review of unit operation, and appropriate reporting are performed.

The administrative controls specify the administrative organizations and functions which provide for proper operation of the unit, including actions to be taken in the event prescribed limits are exceeded.

13.5.1.1 Conformance with Federal Guidelines

Dresden Station procedures are written to conform to applicable federal guidelines. The contents of the procedure manuals follow Appendix A of Regulatory Guide 1.33 (Revision 2) and ANSI N18.7-1972 requirements.

13.5.1.2 Preparation of Procedures

Detailed station procedures (i.e., plant procedures), administrative procedures, and safety-related operating procedures are prepared by members of the station management staff or by personnel whom they designate. The Technical

Specification 6.8A provides a list of items for which written procedures are required to be established, implemented, and maintained. Planned safety-related operations are conducted in accordance with detailed station procedures.

The station Plant Operations Review Committee reviews applicable administrative procedures and emergency operating procedures, as required by the Quality Assurance Program.

Technical review and approval of procedures which affect nuclear safety (and changes thereto) are carried out per the requirements of the Quality Assurance Program.

All procedures described in this section are authorized by appropriate station management personnel before being implemented.

13.5.1.3 Procedures

Brief descriptions of selected station administrative procedures which control specific tasks are provided in the following subsections. The descriptions of station positions, responsibilities, and qualification requirements are given in Section 13.1.

13.5.1.3.1 Daily Orders and Operating Orders

Written orders are issued by the station to promulgate instructions and information to the operation and maintenance crews. These orders are issued as Daily Orders and Operating Orders. Operating Orders contain primarily administrative direction and are not a substitute of permanent or special procedures. A Daily Order cannot supersede any approved Operating Order or procedure.

13.5.1.3.2 Equipment Control

Equipment control procedures provide for the necessary control of equipment to maintain plant equipment and personnel safety and to avoid unauthorized operation of equipment. These procedures provide a method to control and maintain labeling to secure and identify equipment. They also describe the criteria for the selection of Operations Department-controlled equipment and valves which are to be locked. The locking of equipment and valves provides assurance that the components will be operated only by authorized personnel performing required activities.

13.5.1.3.3 Control of Maintenance and Modifications

Control of maintenance and modifications is provided for in the Quality Assurance Manual. Station administrative procedures have also been developed to control plant maintenance and modification activities.

13.5.1.3.4 Master Surveillance Testing Schedule

A surveillance schedule prescribes the surveillance to be performed, the performance frequency as outlined in the Technical Specifications, and the departments assigned to perform the surveillance. This schedule is produced as part of the station surveillance and periodic task scheduling program. A computerized system for tracking surveillance tasks has also been developed to augment the existing system.

13.5.1.3.5 Logbook Usage and Control

Procedures for logbook usage and control ensure that adequate documentation of various unit operations and conditions is maintained. The procedure provides detailed instructions for maintenance of records and narrative logbooks to ensure that day-to-day shift activities are properly documented.

13.5.1.3.6 Temporary Changes to Procedures

Temporary Changes to procedures may be provided:

a. The intent of the original procedure is not altered.

b. The change is approved by two members of the plant management staff, at least one of whom holds a Senior Reactor Operator's License on the unit affected.

c. The change is documented, reviewed and approved within 14 days of implementation.

13.5.2.1.7 Temporary Changes to Operating Procedures

Temporary changes to procedures are addressed in section 13.5.1.3.6.

13.5.2.2 Other Procedures

This section describes certain other operating and maintenance procedures, including the general objectives and characteristics of each class of procedure.

13.5.2.2.1 Radiation Protection Procedures

Radiation Protection Procedures (DRPs) detail steps necessary to comply with policies established by the Radiation Protection Department, operation and surveillance of radiation protection instrumentation, methods of conducting surveys and collecting samples, and steps necessary to meet Technical Specification and Code of Federal Regulation requirements.

13.5.2.2.2 Emergency Plan Implementing Procedures

Emergency Plan Implementing Procedures (EPIPs) detail the steps necessary to implement the Generating Station Emergency Plan.

13.5.2.2.3 Instrument Procedures

Instrument Procedures (DIPs) detail control of instrument surveillance, steps for calibrations and checks performed, instrument maintenance performed during refueling outages, and control of instrument records.

13.5.2.2.4 Chemistry Procedures

Chemistry Procedures (DCPs) supplement the Central Computer Procedures and the Central Chemistry Procedures. They detail analyses performed at the station, specifications and limitations for such analyses, and actions required of radiation chemistry personnel if the conditions are found to be outside specifications.

13.5.2.2.5 Radiological Control Procedures

Radiological Control Procedures prescribe the methods and modes of operation and guidance for proper handling, transfer, storage, and packaging of radioactive waste materials resulting from plant operations.

13.5.2.2.6 Maintenance Procedures

13.5.2.2.6.1 Mechanical Maintenance Procedures

Mechanical maintenance Procedures (DMPs) govern maintenance of safety-related components, detail steps for complex mechanical maintenance activities, and detail steps for mechanical maintenance activities that are not performed at a fixed frequency.

Maintenance Procedures provide guidance for both electrical and mechanical repair personnel. Maintenance Procedures differ from Repair Manuals in that the repair manuals contain rigging suggestions, tool lists and supplementary information to vendor manuals. Repair manuals do not contain detailed step-by-step sequences. Consequently, repair manuals are not procedures, do not require review by the Plant Operations Review Committee, and are administratively controlled within the Maintenance Department.

13.5.2.2.6.2 Electrical Maintenance Procedures

Electrical Maintenance Procedures (DEPs) govern electrical maintenance of safety-related components and detail steps for electrical maintenance activities not performed on a fixed frequency.

13.5.2.2.6.3 Emergency Plan Maintenance Procedures

Emergency Plan Maintenance Procedures (EPMPs) detail the steps necessary for station personnel to perform surveillance and maintenance activities on station Emergency Response Facilities to assure they are available to implement the Generating Station Emergency Plan.

13.5.2.2.7 Warehouse Procedures

Warehouse Procedures (MS-AA-102) control packaging, receiving, handling, and storage of items in the storeroom. They also control storage of safety-related and ASME-related materials, provide for preventive maintenance for items in storage, and provide for proper documentation.

13.5.2.2.15 Special Procedures

Special Procedures are temporary in nature. They serve one or more of the following purposes:

A. To detail operation during specific and/or unique circumstances;

B. To detail steps required to accomplish a task not immediately covered by permanently approved procedures;

C. To verify steps or conditions such that a permanent procedure can be developed;

D. To detail steps necessary to accomplish a specific and/or unique task;

E. To detail steps necessary to accomplish an infrequently performed task or a task that is not expected to be repeated;

F. To detail steps for troubleshooting a specific problem; and

G. To detail steps necessary to accomplish preoperational testing and/or initial calibration of systems and/or equipment when not covered by a modification procedure, work package instruction, or a permanently approved procedure.

H. To detail steps necessary to perform a test, experiment, modification test, or operability test.

Special Procedures that affect Nuclear Safety receive review by the Plant Operations Review Committee and Nuclear Safety Review Board. Although the procedure or steps of the procedure may be repeated as necessary to accomplish the task or purpose of the procedure, the Special Procedure may not be reused once the intent of the procedure has been achieved without subsequent review and approval under a new Special Procedure number. Except for outage-related procedures, a Special Procedure is not used for a time period in excess of 6 months. The level of detail should be consistent with the complexity, skill level, and acceptance criteria of the task to be performed.

13.5.2.2.16 Metrology Procedures

Metrology Procedures (DTEs) detail specific methods/steps for the calibration of Measurement and Test Equipment (M&TE) traceable to nationally recognized standards.

13.5.3.8 Technical Staff Surveillance Procedures

Technical Staff Surveillance Procedures (DTSs) describe regularly scheduled surveillances that require engineering expertise to accomplish or that should be performed under the cognizance of an engineer.

13.5.3.9 Non-Station Work Group Procedures

Non-station work group procedures are procedures which govern work performed at Dresden and which are either prepared by onsite contractors, by EGC departments located offsite, or are prepared by station personnel to address activities which are not controlled by station procedures (e.g., fire pre-plans). The station may use non-station work group procedures once they are reviewed in accordance with the applicable administrative procedure.

13.5.4 Nuclear Generation Group (NGG) Procedures

NGG Procedures (NSPs, NSWPs, etc.) may be used in lieu of station procedures (DAPs, DWPs, etc.) once they are reviewed and approved in accordance with the applicable administrative procedure.

Table 13.5-1

STATION PROCEDURE DESIGNATIONS AND CATEGORIES

Designation[1]	Category of Procedure
DAN	Annunciator Procedures
DAP	Administrative Procedures
DCP	Chemistry Procedures
DCS	Chemistry Surveillances
DEOP	Emergency Operating Procedures
DEP	Electrical Maintenance Procedures
DES	Electrical Surveillances
DFP	Fuel Handling Procedures
DFPP	Fire Protection Procedures
DFPS	Fire Protection Surveillances
DGA	General Abnormal Procedures
DGP	General Operating Procedures
DHP	Health and Safety Program Procedures
DIP	Instrument Procedures
DIS	Instrument Surveillances
DMP	Mechanical Maintenance Procedures
DMS	Mechanical Surveillance Procedures
DOA	System Operating Abnormal Procedures
DOP	System Operating Procedures
DOS	System Operating Surveillances
DRP	Radiation Protection Procedures
DRS	Radiation Protection Surveillances
DSBP	High Radiation Sample Building Procedures
DSP	Security Procedures
DSSP	Safe Shutdown Procedures
DTE	Test Equipment (M&TE) Procedures
DTP	Technical Staff Procedures
DTS	Technical Staff Surveillances
DWP	Warehouse Procedures

Table 13.5-1 (Continued)

STATION PROCEDURE DESIGNATIONS AND CATEGORIES

Designation[1]	Category of Procedure
DXP	Contingency Procedures
EPIP	Emergency Plan Implementing Procedure
EPMP	Emergency Plan Maintenance Procedures
SP	Special Procedures
NSP	Nuclear Station Procedures
NSWP	Nuclear Station Work Procedures

1. The first letter "D" designates Dresden Station.

13.6 SECURITY

EGC implements and maintains in effect all provisions of the NRC-approved physical security, guard training and qualification, and safeguards contingency plans for Dresden Station in accordance with the operating licenses. The plans are specified in the following documents, as revised and filed with the NRC:

A. "Dresden Nuclear Power Station Security Plan,"

B. "Dresden Nuclear Power Station Security Personnel Training and Qualification Plan," and

C. "Dresden Nuclear Power Station Safeguards Contingency Plan."

These plans meet the requirements of 10 CFR 73.55 and Part 73, Appendices B and C.

The security plan documents contain safeguards information protected under 10 CFR 73.21 and are, therefore, withheld from public disclosure. Some general information relating to security is presented in the following paragraphs.

The Site Vice President has the ultimate responsibility and authority for security at the Station. Below the Vice President, the management of the security organization is independent of the site management. Authority for administration of the security organization is delegated from the Security Director to the Station Security Administrator (see Section 13.1). The Station Security Administrator reports directly to the Security Director and maintains an information and coordinator channel to the Site Vice President.

Station access is controlled by station security in accordance with the Dresden security plan and Dresden administrative procedures.

The following area designations are used at the station:

A. Unrestricted area: that area beyond the site property line.

B. Owner Controlled Area: that area between the station security fence and the property boundary line.

C. Unposted area: that area within the station security fence that is not part of a radiologically posted area.

D. Radiologically posted areas: those areas posted as radiation areas, high radiation areas, radioactive materials areas, airborne radioactivity areas, or combinations thereof. Access to radiologically posted areas for all work is controlled in accordance with station radiation protection procedures.

E. Protected area: that area within the owner-controlled area enclosed by a station security fence in which the main buildings are located. Access to the protected area is controlled.

13.7.4 Review Committee Transactions

Records of review committee transactions include minutes of meetings and results of reviews performed by the Plant Operations Review Committee and Nuclear Safety Review Board.

13.7.5 Radiological and Chemical Records

Included in this category of records are the occupational radiation exposure records for all plant personnel, including contractors and plant visitors, in accordance with 10 CFR 20, as well as radiation surveys, offsite environmental monitoring records, and others as noted in Table 13.7-1.

13.7.6 Maintenance Records

This category includes records of maintenance and activities (substitution, inspection, and/or repair) for principal equipment pertaining to nuclear safety and the reasons for the maintenance. It also includes records of periodic checks, inspections, calibrations, and/or corrective actions (if any) performed in accordance with Technical Specification surveillance requirements. These records are maintained by the Maintenance Superintendent.

13.7.7 Records of Facility Description and Evaluation

Records of facility description and evaluation include drawings, descriptions of plant changes, evaluations performed in accordance with 10 CFR 50.59, and records of environmental qualification.

13.7.8 Personnel Records

Personnel records address the qualification, experience, training, and retraining of individual staff members.

Table 13.7-1
REQUIREMENTS FOR RECORD RETENTION[a]

Record Type	Record Description	Minimum Retention Period
Control room records	Shift Engineers' logs	5 years
Plant operation records	Normal plant operation	5 years
	Reportable events	5 years
	Safety limit events	5 years
	Reactor coolant system inservice inspections	Life of plant
	Transient or operational cycling of life-limited components	Life of plant
	Physics tests and other tests pertaining to nuclear safety	5 years
Procedure changes	Changes to procedures as required by Technical Specifications	5 years
Review committee transactions	Reviews by Plant Operations Review Committee	Life of plant
	Reviews by Nuclear Safety Review Board	Life of plant
Radiological records	Personnel exposure records	Life of plant
	Radioactivity in liquid and gaseous wastes released to the environment	Life of plant
	Plant radiation and contamination surveys	Life of plant
	Offsite environmental monitoring surveys	Life of plant

15.0 ACCIDENT AND TRANSIENT ANALYSIS
TABLE OF CONTENTS

15.0 ACCIDENT AND TRANSIENT ANALYSIS
LIST OF TABLES

15.0.2.1 Transients

Transients which occur as a consequence of a single equipment failure or malfunction or single operator error are evaluated in the sections listed below:

Analysis		Section
A.	Decrease in feedwater temperature (loss of feedwater heating)	15.1.1
B.	Increase in feedwater flow (feedwater controller malfunction) - maximum flow	15.1.2
C.	Increase in steam flow	15.1.3
D.	Steam pressure regulator malfunction	15.2.1
E.	Generator load rejection without bypass	15.2.2.1
F.	Generator load rejection with bypass system (loss of electrical load)	15.2.2.2
G.	Turbine trip without bypass	5.2.2.2.2 and 15.2.3.1
H.	Turbine trip with partial bypass - maximum power	15.2.3.2
I.	Inadvertent closure of main steam line isolation valves	15.2.4
J.	Loss of main condenser vacuum	15.2.5
K.	Loss of offsite ac power	15.2.6
L.	Loss of normal feedwater flow (feedwater controller malfunction) - zero flow	15.2.7
M.	Single and multiple recirculation pump trips	15.3.1
N.	Recirculation flow controller failure (malfunction) - decreasing flow	15.3.2
O.	Recirculation pump shaft break	15.3.5
P.	Jet pump malfunction	15.3.6
Q.	Uncontrolled control rod assembly withdrawal - subcritical or startup condition	15.4.1
R.	Rod withdrawal error	15.4.2
S.	Control rod maloperation	15.4.3
T.	Startup of idle recirculation loop at incorrect temperature (cold recirculation loop)	15.4.4
U.	Recirculation flow controller failure (malfunction) - increasing flow	15.4.5
U.1	Thermal Hydraulic Instability	15.4.11
V.	Inadvertent actuation of high pressure coolant injection during power operation	15.5.1
W.	Inadvertent opening of a safety valve, relief valve, or safety relief valve	15.6.1
X.	Radioactive gas waste system leak or failure	15.7.1
Y.	Postulated liquid releases due to liquid tank failure	15.7.2
Z.	Loss of auxiliary power	8.3.1
AA.	Power bus loss of voltage	8.3.1
BB.	Instrument air failure	9.3.1.2

CC.	Failure of one diesel generator to start	8.3.1.5

In addition to the above transients, the following events have been analyzed as transients although they are not anticipated operational occurrences when considered without scram:

A.	Closure of main steam isolation valves without scram	15.8.1
B.	Loss of normal ac power without scram	15.8.2
C.	Loss of normal feedwater flow without scram	15.8.3
D.	Turbine-Generator trip without scram	15.8.4
E.	Loss of condenser vacuum without scram	15.8.5

15.0.2.2 Design Basis Accidents

In order to evaluate the ability of the plant safety features to protect the public, a number of accidents are analyzed herein. These accidents are of very low probability; they are considered in order to include the far end of the spectrum of challenges to the safeguards and the containment system. The accidents evaluated are discussed in the following sections:

Analysis		Section
A.	Control rod drop	15.4.10
B.	Loss of coolant	15.6.2 and 15.6.5
C.	Main steam line break	15.6.4
D.	Recirculation pump shaft seizure	15.3.3
E.	Recirculation pump shaft seizure while in single loop operation	15.3.4
F.	Fuel assembly drop during refueling	15.7.3
G.	Mislocated fuel assembly	15.4.7
H.	Misoriented fuel assembly	15.4.8
I.	Spent fuel cask drop	15.7.4

15.0.2.3 Method of Analysis

Sections 15.1 through 15.8 provide analyses for each transient and accident given above, from the initiating event to the propagation of the event including effects on other systems. Generally, for each transient or accident analysis there are subsections which delineate the cause identification, frequency classification, sequence of events and system operation, core and system performance, barrier performance, and radiological consequences.

15.0.2.4 Transients Reanalyzed for each Fuel Cycle

Some of the transients listed above in Section 15.0.2.1, are reanalyzed for each fuel cycle to account for the characteristics specific to the fuel type and configuration for that cycle. The results of these transient analyses are used to set reactor thermal limits for that cycle in order to prevent fuel damage or reactor coolant pressure boundary (RCPB) overpressurization.

The remaining transients are not reanalyzed for each fuel cycle since they have been found to be always bounded by (i.e., less severe than) those transients that are reanalyzed.

The transients currently reanalyzed for each cycle are as follows:

A. Loss of feedwater heating (15.1.1);

B. Feedwater controller failure (15.1.2);

C. Generator load rejection without bypass (15.2.2.1);

D. Turbine Trip without bypass (15.2.2.2.2 and 15.2.3.1);

E. Rod Withdrawal Error Event (15.4.2);

F. Thermal hydraulic Instability (15.4.11); and

G. Main steam line isolation valve closure without direct scram or credit for relief valves (ASME overpressure event) (15.2.4).

Transients A through F are reanalyzed for each cycle to determine thermal margins. ASME overpressure events (MSIV closure, turbine stop valve closure without bypass valve operation event and turbine control valve closure without bypass valve operation event) are reanalyzed to confirm the maximum pressure is within 110% of the reactor coolant system design pressure (Section 15.2.4.2). Feedwater Controller Failure, Generator load rejection without bypass, Turbine Trip without bypass, or Rod Withdrawal Error Event are usually the most limiting transient for determining thermal limits to prevent fuel damage. A more detailed description of these transients is given in identified Sections.

The results of cycle specific transient analyses have indicated that operation must be maintained within a range of pressure, determined by the inputs to the transient analyses. This limitation is applicable at and slightly less than 100% power. For instance, typically below 90% power, reactor pressure can decrease below the established range.

15.0.2.5 Radiological Reassessments of Design Basis Accidents

A chronology of different radiological assessments is given in UFSAR Section 15.6.5.5 for the loss-of-coolant accident.

The current UFSAR licensing basis utilizes the TID-14844 methodology, which establishes source term based on rated core thermal power. Since the power rating of the core is not changing, the source term is not an issue. Since the source term remains unchanged, the radiological release is not dependent upon the number of fuel rods in an assembly. The radiological release per fuel assembly is unchanged from 7x7 to 8x8 to 9x9 fuel assemblies.

The design basis accidents assessed in the UFSAR which have a radiological release that is promotional to the core radionuclide inventory are the following:

A. Control Rod Drop Accident (Section 15.4.10)
B. Loss-of-Coolant Accidents Resulting from Piping Breaks Inside Containment (Section 15.6.5)
C. Design Basis Fuel Handling Accidents During Refueling (Section 15.7.3)

The design basis accidents assessed in the UFSAR which do not have a radiological release that is proportional to the core radionuclide inventory are the following:

A. Steam System Line Break Outside Containment (Section 15.6.4)
B. Break in Reactor Coolant Pressure Boundary Instrument Line Outside Containment (Section 15.6.2)
C. Loss of Normal Feedwater Flow (Section 15.2.7)

The specific activity of the primary coolant is limited by Technical Specification. In addition, there is no core uncovery and no perforations of the fuel during a main steam line break, instrument line break, or loss of feedwater flow. Therefore, since only the coolant activity is released, the radiological dose calculations are independent of fuel type or design.

15.1 INCREASE IN HEAT REMOVAL BY THE REACTOR COOLANT SYSTEM

Events described in this section that result in decreased feedwater temperature may also result in a core thermal hydraulic instability transients.

This section covers transients which involve an unplanned increase in heat removal from the reactor. Excessive heat removal, i.e., heat removal at a rate in excess of the heat generation rate in the core, causes a decrease in moderator temperature which increases core reactivity and can lead to an increase in power level and a decrease in shutdown margin. The power level increase, if sufficient, would be terminated by a reactor scram. An unplanned power level increase, however, has the potential to cause fuel damage (defined in Section 4.2.1.1) or excessive reactor coolant system pressure.

The following design basis transients are covered in this section:

A. Feedwater system malfunctions that result in a decrease in final feedwater temperature;

B. Feedwater system malfunctions that result in an increase in feedwater flow; and

C. Steam pressure regulator malfunctions that result in an increase in steam flow.

The events described in this section may not be reanalyzed for the current fuel cycle since they may continue to be bounded by analyses for previous fuel cycles. These events, including the associated assumptions and conclusions, continue to be part of the plant licensing basis. The conclusions of these analyses are still valid; however, specific details contained in the descriptions and associated figures should be used only to understand the analysis and its conclusions. These specific details should not be used as sources of current fuel cycle design information.

15.1.1 Decrease in Feedwater Temperature

A decrease in feedwater temperature due to loss of feedwater heating would result in a core power increase due to the increase in core inlet subcooling and the reactivity effects of the corresponding increase in moderator density.

15.1.1.1 Identification of Causes and Frequency Classification

Feedwater heating can be lost in at least two ways: if the steam extraction line to the heater is closed, or if the feedwater is bypassed around the heater.

The first case would produce a gradual cooling of the feedwater. In the second case, the feedwater would bypass the heater, and the reduction of heating would occur during the stroke time of the bypass valve (about 1 minute, similar to the heater time constant). In either case the reactor vessel would receive feedwater that is cooler than normal. The maximum number of feedwater heaters which can be tripped or bypassed by a single event represents the most severe transient for analysis considerations. The loss of feedwater heating would cause an increase in

15.2 DECREASE IN HEAT REMOVAL BY THE REACTOR COOLANT SYSTEM

Some events described in this section have not been reanalyzed for the current fuel cycle because these events continue to be bounded by other events which are analyzed for the current fuel cycle. Although not reanalyzed, these events, including the associated assumptions and conclusions, continue to be part of the plant's licensing basis. The conclusions of these analyses are still valid; however, specific details contained in the descriptions and associated figures should be used only to understand the analysis and its conclusions. These specific details should not be used as sources of current fuel cycle design information.

15.2.1 Steam Pressure Regulator Malfunction

15.2.1.1 Identification of Causes and Frequency Classification

For the steam pressure regulator malfunction, the turbine pressure regulator is assumed to fail low (i.e., zero output). This event is classified as a moderate frequency event.

15.2.1.2 Sequence of Events and System Operation

If the turbine pressure regulator were to fail low, the backup regulator would take control of the turbine valves as soon as the failed regulator attempted to close the valves and pressure rose past the backup regulator setpoint as follows:

Unit 2: biased about 10 psi above the operating setpoint
Unit 3: biased about 3.0-5.0, nominally 4.0 psi above the operating setpoint.

15.2.1.3 Core and System Performance

The transient would be similar to a pressure setpoint increase as discussed in Section 4.3.2.3.4.

15.2.1.4 Barrier Performance

This transient is not analyzed for reload cores since the fuel-specific operating limit minimum critical power ratio (MCPR) is determined for each reload core based on bounding events for the cycle. The operating limit MCPR is established to preclude violation of the fuel cladding integrity safety limit. The steam pressure regulator malfunction is not considered as one of the limiting events for the fuel cycle.

G. A final feedwater temperature reduction is not assumed each cycle for load rejection without bypass analyses. Unit 3 Cycle 15 analyses were performed with a feedwater temperature reduction of 100°F. These analyses resulted in a ΔCPR 0.04 lower than the ΔCPR with normal feedwater temperature.

This event is classified as a moderate frequency event.

15.2.2.1.2 Sequence of Events and System Operation

A complete loss of the generator load would produce the following sequence of events:

A. The power/load imbalance device steps the load reference signal to zero and closes the turbine control valves at the earliest possible time. The turbine accelerates at a maximum rate until the valves start to close. The turbine control valves close in 0.150 seconds for the full valve stroke.

B. Reactor scram initiates upon sensing control valve fast closure signal.

C. If the pressure rises to the pressure relief setpoint, some or all of the relief valves would open, discharging steam to the suppression pool.

In parallel, the generator protective relaying will result in a generator lockout and turbine trip. Hence, a load rejection occurring while the power/load device is being tested will not result in a more severe event than that analyzed on a cycle specific basis for the generator load rejection without bypass event.

15.2.2.1.3 Core and System Performance

Fast closure of the turbine control valves would be initiated whenever electrical grid disturbances result in significant loss of load on the generator. The turbine control valves would close as rapidly as possible to prevent overspeed of the turbine generator rotor. The closing would cause a sudden reduction of steam flow which would result in a reactor coolant system pressure increase. The reactor would be scrammed by the fast closure of the turbine control valves.

A typical transient response to the load rejection without bypass is shown in Figures 15.2-1, 15.2-2, 15.2-3. A typical calculated ΔCPR is 0.31. The cycle-specific ΔCPR for the generator load reject without bypass event can be found in the Core Operating Limits Report which is part of the Dresden Administrative Technical Requirements or applicable cycle-specific reload documents.

15.2.2.1.4 Barrier Performance

The fuel-specific operating limit MCPR is determined for each reload core. The operating limit MCPR is established to preclude violation of the fuel cladding integrity safety limit. The resultant ΔCPR for the load rejection without bypass transient would be within the thermal margin set by the operating limit MCPR with a maximum ΔCPR of 0.35 (typical ΔCPR value from the limiting AOO such as the feedwater controller failure analysis in Section 15.1.2). The reactor coolant pressure boundary (RCPB) integrity would be maintained since the maximum vessel pressure resulting from the load rejection without bypass event was evaluated to be 1294 psig (typical value: Cycle specific results can be found in the Core Operating Limits Report which is part of the Dresden Administrative Technical Requirements or applicable cycle-specific reload documents), well below the 1375 psig maximum vessel pressure limit.

15.2.3.1.3 Core and System Performance

The turbine stop valves would close as rapidly as possible. The closing would cause a sudden reduction of steam flow which would result in a nuclear system pressure increase. The reactor would be scrammed by the closure of the turbine stop valves.

15.2.3.1.4 Barrier Performance

The maximum drop in CPR (ΔCPR) calculated (typical value of 0.33) is adequate for protection of all fuel types against boiling transition. Since a typical rated conditions operating limit MCPR is 1.46 (typical value for OLMCPR, the cycle specific OLMCPR can be found in the Core Operating Limits Report or applicable cycle specific reload documents), the MCPR will remain above the Technical Specification Safety Limit and the fuel cladding integrity safety limit is not violated. The reactor coolant pressure boundary (RCPB) integrity would be maintained since the maximum vessel pressure resulting from the turbine trip without bypass event was evaluated to be 1279 psig (typical value: cycle specific results can be found in the applicable cycle-specific reload documents), well below the 1375 psig maximum vessel pressure limit.

15.2.3.1.5 Radiological Consequences

Since the fuel cladding integrity safety limit would not be violated, a radiological consequence analysis was not performed.

15.2.3.2 Turbine Trip With Bypass

15.2.3.2.1 Identification of Causes and Frequency Classification

A turbine stop valve closure can be initiated by a variety of turbine or reactor system malfunctions (see Section 15.2.3.1.1).

This event is classified as a moderate frequency event.

15.2.3.2.2 Sequence of Events and System Operation

The sudden closure of the stop valves would cause a rapid pressurization of the steam line and reactor vessel with resultant void collapse and power increase. The reactor would scram from position switches mounted on the stop valves (turbine trip scram).

Closure of the stop valves would immediately initiate bypass valve opening via action of the electrohydraulic control (EHC) system.

original license. Subsequent analyses (NEDO-10958-A[2]) showed that the pump seizure event was no longer a limiting transient.

This transient is not analyzed for reload cores since the fuel-specific MCPR LCO is determined for each reload core based on bounding events for the cycle. The MCPR LCO is calculated to preclude violation of the fuel cladding integrity safety limit.

15.3.1.4 Trip of Two Recirculation Pump Motors

The trip of two recirculation pump motors is discussed in Section 15.8.

15.3.2 Recirculation Flow Controller Malfunctions

The equipment associated with the variable speed recirculation pump motors is designed with the basic objective that in spite of any failure, the operating pump speed should be maintained. However, the potential for failure in either direction (full speed or pump tripped) does exist. These failures have been analyzed and are discussed here and in Section 15.4.5.

For a failure of the master flow controller in either direction, the rate of recirculation flow increase or decrease is limited by the individual M-G set speed controller's response time.

The M-G set speed controllers have a response time of approximately 2 minutes for 0 to 100% speed change. This response time limits the rate of change of the recirculation pump speed regardless of the origin of the demand signal - the demand signal may come from the individual loop transfer station if it is in MANUAL; or, when the transfer station is in AUTO, from the master flow controller when the master flow controller is in MANUAL, or from the load control unit for the turbine when the master flow controller is in AUTO.

Section 15.3.2.4 discusses the results of a failure of an individual M-G set speed controller, which could cause the scoop tube positioner of the M-G set to move at its maximum speed. The minimum scoop tube travel time is approximately 45 seconds, corresponding to a change in pump speed of about 2% per second. The scoop tube travel time is determined by the scoop tube drive motor armature voltage.

The load demand signal to the master flow controller in its automatic mode of operation originates from the turbine-generator load control unit. Load set is accomplished from a pulsing motor drive that can change the load reference at the maximum rate of only about 2½% per second. Note that the plant demand rate is limited to this value. The plant response rate is somewhat slower, as described above.

Negative changes or decreases in load demand would not result in reactor trip but could cause a steam dump to the main condenser through the bypass valves during the load decrease transient. The design of the flow control system is such that step load decreases in excess of 13% will result in the operation of the bypass valves for a short period of time. A step demand decrease in load in excess of 11 MWe gross would result in a steam dump. The 13% value results from the design 10% bias

15.4.8.1 Identification of Causes and Frequency Classification

A fuel assembly is misoriented if it is loaded and operated in a position that is rotated from its proper orientation. A 180° rotation bounds a 90° rotation because a BWR lattice is designed symmetrically about the diagonal axis, and the narrow-narrow corner of the lattice has the highest enriched corner of the lattice due to the lower neutron thermalization in the narrow water gap. Therefore, the limiting condition occurs when the fuel rods that are expected to operate under the lowest thermalization condition actually experience the highest thermalization condition. Hence, only the 180° misorientation is analyzed.

The misoriented assembly has a lower frequency of occurrence than moderate frequency but is evaluated as a moderate frequency event.

15.4.8.2 Sequence of Events and System Operation

Dresden Station is a D-lattice plant utilizing partially symmetrized fuel (40 mil offset). The water gaps are nonuniform. An undetected and uncorrected misorientation of the fuel assembly may result in larger than anticipated local peaking on the wide-wide side of the fuel assembly since the wide-wide side has the larger water gap, and hence, greater neutron thermalization. This may lead to a degradation of MCPR margin and LHGR margin.

15.4.8.3 Core and System Performance

The effect of a misoriented fuel assembly is determined by modeling multiple assemblies in a 180° rotated position using the lattic physics code CASMO, and then depleting the misoriented assembly in hte core using the three-dimensional core simulator MICROBURN-B. The assemblies chosen for the misorientation analysis are based on their potential to be limiting misoriented assemblies. The resulting ΔCPR is determined by comparing the MCPR's from the MICROBURN-B analyses for the misorientated assemblies to the assemblies in the normal orientation. LHGR margin is also checked during the analyses to ensure that the LHGR limits are not violated with the misoriented assembly (Reference 11).

15.4.8.4 Barrier Performance

The fuel-specific Operating Limit Minimum Critical Power Ratio (OLMCPR) is determined for each reload based on bounding events for the cycle. The OLMCPR is established to preclude violation of the fuel cladding integrity safety limit.

15.4.8.5 Radiological Consequences

The fuel cladding integrity safety limit would not be violated. A radiological consequence analysis has not been performed.

15.4.9 Control Rod Ejection Accidents (PWR)

Control rod ejection accidents are not applicable to Dresden Station.

15.4.10 Control Rod Drop Accident

15.4.10.1 Identification of Causes and Frequency Classification

The control rod drop accident (CRDA) is defined as a power excursion caused by accidental removal of a control rod from the core at a more rapid rate than can be achieved by the use of the control rod drive mechanism. In the CRDA, a fully inserted control rod is assumed to fall out of the core after becoming disconnected from its drive and after the drive has been removed to the fully withdrawn or an intermediate position.

The CRDA is considered a limiting fault.

15.4.10.2 System Operation

The control rods are designed to minimize the probability of a rod sticking in the core. The blades of the control rods travel in gaps between the fuel channels with approximately ½-inch total clearance and are equipped with rollers or pads which make contact with the channel walls. Control rods of similar design are now in use in a number of operating reactors, and periodic inspections have revealed no tendency for blade distortion or swelling (that could potentially lead to control rod sticking) due to services in the reactor environment.

The control rod coupling to the drive shaft and other control rod drive improvements which have been made over early designs significantly reduce the probability of an accidental separation of a control rod from a drive (see Section 4.6.1.3). Couplings of this design have undergone extensive tests under simulated reactor conditions and also at conditions more extreme than those expected to be encountered in reactor service. They have been operated through thousands of cycles of scram operation and a separation has never occurred. Tests have shown that the coupling will not separate when subjected to pull forces up to 30 times greater than can be applied with a control rod drive.

Operating procedures require rod-following verification checks during startup and during major rod movements and weekly verification checks on all rods not full-in to insure that any rod-from-drive separation would be detected. Procedures require full insertion of rods when following cannot be verified.

Operating procedures require that control rod movements follow preplanned patterns designed to flatten the power distribution. Flattening the power distribution tends to minimize the reactivity worth of individual rods, so that extensive fuel damage would not be expected if a control rod drop were to occur.

15.4.10.3 Core and System Performance

At the start of the accident, the reactor is in hot standby condition and the dropped rod is assumed to immediately begin to fall. Hot standby is the worst operating condition because a higher energy release is calculated for this condition and because a path for the unfiltered release of fission products could exist through the mechanical vacuum pump on the condenser. When the core power reaches scram magnitude level (120% of rated power), the high flux trip occurs and the scram rods begin entering the core after an assumed delay time has elapsed. The total time analyzed for the accident is approximately 6 seconds.

The overall negative reactivity insertion as a result of the scram is influenced by the scram signal setpoint, as well as the delay time from the scram signal to the start of rod motion and the scram rod velocity. In this analysis, the scram delay time was assumed to be 0.3 seconds and the scram velocity to be 2.54 ft/s. In addition, the effect of partially inserted rods was neglected in the analysis. This combination of factors provides a conservative scram reactivity for the analysis.

of scram motion. Furthermore, the negative reactivity effect of the scrammed rods is not realized until additional time has elapsed to allow the scrammed rods to reach a significant level in the core. Therefore, considering the assumptions used herein, the scram reactivity is of secondary importance (compared to Doppler reactivity) during the rod drop accident. In these two cases, as well as all other cases analyzed, the 280 cal/g limit is not exceeded.

Historically, ComEd utilized the generic General Electric Banked Position Withdrawal Sequence (BPWS) methodology (NEDE-24011-P-A-11-US) and SPC analysis methods (discussed above) to protect the 280 cal/g fuel damage limit. As with most generic analyses, they can be unnecessarily restrictive. In the early 90s, ComEd received NRC approval to perform in-house design calculations. Using this in-house ability, ComEd began to perform cycle specific control rod drop accident (CRDA) analyses. Using cycle specific calculations, ComEd is able to modify the original BPWS sequence to remove some of the unnecessary conservatism (typically, elimination of some banked positions). These sequences are referred to as the analyzed rod position sequence.

Control rod patterns analyzed in the cycle specific CRDA analyses follow predetermined sequencing rules which apply from the all rods in condition to the Low Power Setpoint (LPSP). These rules include the designation of control rod groups. The positions at which control rods are banked are established to limit the maximum incremental control rod worth such that the 280 cal/g design limit is not exceeded. Cycle specific analyses ensure that the 280 cal/g fuel damage limit is not exceeded during worst case scenarios. These worst case scenarios account for a limited number of inoperable control rods with a specified separation criteria. Specific evaluations or analyses can be performed for atypical operating conditions, e.g. fuel leaker suppression.

The cycle specific CRDA analyses are based on methodology developed by Siemens Power Corporation and approved by the NRC. The important parameters that impact the CRDA analysis are the maximum dropped rod worth, core average Doppler coefficient, core average delayed neutron fraction (beta) and the relative power peaking of the fuel assemblies surrounding the control rod that is postulated to drop. These cycle-specific parameters are then used with a generic set of parametric curves to determine the energy deposition associated with CRDA for the cycle of interest. These analyses provide assurance that the 280 cal/g enthalpy deposition limit will not be violated. This enthalpy deposition is calculated each cycle.

The analyzed control rod sequence and the CRDA analysis provide confidence that the design limit will not be violated in the unlikely event of the postulated design basis CRDA. Even if the 280 cal/g design limit is not exceeded, fuel failure is still assumed to occur for those fuel rods which exceed 170 cal/g. The CRDA analyses verify that no rods are predicted to exceed the 280 cal/g limit and specify the number predicted to exceed the 170 cal/g limit.

15.4.10.4 Barrier Performance

Barrier performance and radiological consequences for CRDA are not analyzed for reload cores. The following discussion pertains to the initial licensing analyses which show typical results.

Fuel rod damage estimates are based upon the UO_2 vapor pressure data of Ackerman[4] and interpretation of all the available SPERT, TREAT, KIWI, and PULSTAR test results which show that the immediate fuel rod rupture threshold is about 425 cal/g. Two especially applicable sets of data come from the PULSTAR[5] and ANL-TREAT[6,7] tests.

The PULSTAR tests, which used UO_2 pellets of 6% enrichment with Zirconium-2 cladding, achieved maximum fuel enthalpies of about 200 cal/g with a minimum period of 2.83 milliseconds. The coolant flow was by natural convection. Film boiling occurred and there were local clad bulges; however, fuel pin integrity was maintained and there were no abnormal pressure rises.

The two ANL-TREAT tests used Zircaloy-clad UO_2 pins with energy inputs of 280 and 450cal/g. The final mean particle diameter was 60 mils and 30 mils, and the pressure rise rate was 30 psi/s and 600 psi/s for the 280 cal/g and 450 cal/g tests, respectively.

The ultimate degree of fuel fragmentation and dispersal of the two cases was not significantly different; however, the pressure rise rate in the higher energy test was increased by a factor of 20. This pressure rise very strongly implies that the dispersion rate in the higher energy test was significantly higher than that of the lower energy. This leads to the logical conclusion that, although a high degree of fragmentation occurs for fuel in the 200 to 300 cal/g range, the breakup and dispersal into the water is gradual and pressure rise rates are very modest. On the other hand, for fuel above the 400 cal/g range, the breakup and dispersal is prompt and much larger pressure rise rates are probable.

Based on the analysis of the above referenced data, it is estimated that 170 cal/gm is the threshold for eventual fuel cladding damage. Fuel melting is estimated to occur in the 220- to 280-cal/g range, and a minimum of 425 cal/g would be required to cause immediate rupture of the fuel rods due a UO_2 vapor pressures.

15.4.10.5 Radiological Consequences

The fission product release estimate for the CRDA performed for initial licensing was based on a set of assumptions that predated the SRP and resulted in the failure of 660 fuel the rods releasing 100% of the noble gases and 50% of the halogens from the affected rods to the coolant. The resulting doses were well within the limits of 10CFR100. Subsequent to that analysis, as part of the Systematic Evaluation Program, the NRC performed another independent analysis assuming 850 failed fuel rods, with 10% of the noble gas inventory and 10% of the iodine from the perforated rods released to the coolant. No fuel melting was assumed in the SEP analysis. The resulting radiological consequences were less than the acceptance criteria given in SRP Section 15.4.9. Appendix A, Revision 1 and were well within the guidelines of 10CFR100.11.

The current Dresden CRDA radiological analysis is based on GE NEDO-31400A and was performed for the elimination of the MSLRM isolation and scram function. It is based on the following assumptions:

A. The CRDA is assumed to result in the failure of 850 fuel rods (2% of total), with a peaking factor of 1.5.

   The GE NEDO is based on 8X8 fuel assemblies. The current core at Dresden uses 9X9 Atrium-9B assemblies. The assumption of 850 rods in the NEDO report still envelops the core as long as the fraction of failed fuel (i.e., 2%) following a CRDA is in the same or lower proportion as for the 8X8-assembly case. It is stated in NEDO-31400A that 850 failed rods represents a bounding value.

B. Although the NEDO report assumed 0.0077 of the fuel melted, there would be no fuel melt at Dresden for the CRDA; therefore, only a gap release from the fuel rods is considered. 10% of the noble gas inventory and 10% of the radioiodine inventory are assumed to be released from the fuel to the reactor coolant during the gap release.

C. 100% of the noble gases and 10% of the iodine that are released to the coolant are carried over in the steam to the turbine/condenser. In other words, no credit is taken for plateout or decay during transport to the condenser.

D. All of the noble gases reaching the condenser are assumed to be available for leakage. Due to washout/plateout removal mechanisms, only 10% of the iodines are available for leakage from the condenser.

E. The airborne activity in the condenser is assumed to leak to the atmosphere at a rate of 1% per day for a 24-hour period following the initiation of the CRDA. It is also assumed that the main condenser's mechanical pump is isolated (vacuum pump trips on MSLRM high radiation signals were not removed).

F. No credit is taken for holdup and decay in the turbine building after release from the condenser. The release from the turbine building is treated as a ground level release.

G. The only other release path not automatically isolated on this event is via the Turbine Gland Seal Condenser. For the turbine gland seal release, the reactor steam containing the CRDA source is assumed to pass through the turbine seals and into the gland seal condenser. In the analysis, no credit taken for partitioning of radioiodine between the air and condensed steam i.e. all iodine and noble gases entering the gland seal condenser are released to the

H. For the analysis of turbine gland seal exhaust, the core inventory of radioactive iodine and noble gases is derived from TID-14844 and the source reflects the extent of damage to the fuel rods.

I. In this calculation, the gland seal pathway is conservatively treated as a ground level release, even though the turbine gland seal steam is released via the plant chimney and could be treated as an elevated release.

J. The gland seal leakage after reactor trip is assumed to be directly proportional the main steam flow rate. The main steam flow rate is assumed to be directly proportional to the decay heat power as a fraction of full power.

Reference 12 indicates that the decay heat after the reactor trips drops rapidly to less than 5% in about 10 seconds. In fact, over a 2 hour period the average decay heat power would be less than 3% of full power. For this analysis, it is assumed that the decay heat power and, therefore, the steam flow remains at 5% for the entire duration after the reactor is tripped.

K. The analysis is the NEDO report provides a dose assessment at the EAB for a 2 hour release duration. For the present calculation a dose assessment is also provided at the LPZ for a 24 hour release. An estimate of the release for the 24 hour period is conservatively made for this assessment by neglecting decay and removal of the radionuclides over the longer period.

The dose for the longer durations will be calculated by multiplying the 0-2 hr. dose by a factor which is the ratio of the durations. For the 8-24 hr. period the calculated ratio of 8 must be reduced to account for the lower breathing rate over this period. Therefore, for the 8-24 hr. period:

$8*[BR(8\text{-}24hr)/BR(0\text{-}2hr)=8*[1.75E\text{-}4m^3/sec/3.47E\text{-}4m^3/sec]=4.03$

L. The combined free volume of the main steam lines and vessel steam dome is 8431.ft^3. However, a smaller volume of 5000 ft^3 is conservatively used in the calculation.

The Dresden analysis has two parts. The first part utilized the NEDO-31400A report to analyze the two release scenarios evaluated as applied to the Dresden Station. The NEDO report used the most

bounding parameters from all participating plants (including Dresden) to analyze the effects of removing the MSIV isolation function of the MSLRM.

The second part analyzed the additional dose contribution from other release points. For the Dresden Station the only other applicable release point is the turbine gland seal system.

Scenario 1:

The first scenario following the methodology for analyzing a CRDA outlined in the U.S. NRC Standard Review Plan 15.4.9. In this approach it is assumed that the fission product activity is airborne in the turbine and condenser following MSIV closure and leaks directly from the condenser to the environment as a ground level release.

The conservative dose at Dresden for this scenario is found simply by multiplying the dose calculated in the NEDO-31400A by the ratio of the Dresden X/Q to the X/Q assumed in the NEDO report.

Scenario 2

In this scenario, it is assumed that no automatic MSIV closure occurred and the radioactivity is transported to the augmented offgas system. The release to the environment is then from the normal offgas release point, the plant stack, after holdup in the offgas treatment system. The source term assumptions are the same as in Scenario 1. NEDO-31400A assumes the entire noble gas source term is released via the augmented offgas system. Also, it is assumed that the radioiodines are transported to the augmented offgas system and are retained indefinitely and do not contribute to offsite dose. All releases are via the plant stack and are treated as elevated releases.

Gland Seal Release

The only release path not automatically isolated on this event is via the Turbine Gland Seal Condenser. For the turbine gland seal release, the reactor steam containing the CRDA source is assumed to pass through the turbine seals and condense in the gland seal condenser. In the analysis, no credit is taken for partitioning of radioiodine between the air and condensed steam, i.e, all iodines and noble gases in the steam are released to the environment.

The calculation of the doses is done by using the mechanistic removal of activity from the vessel using the Bechtel Standard Computer Program LOCADOSE. The gland seal condenser radiological analysis is based on a reactor power of 2577.5 Mwe (102% rated power), a main steam flow of 9.765E6 lbm/hr, gland seal steam flow rate of 15,000 lbm/hr (double packing clearance) and specific volume for steam of 0.445 ft^3/lbm (1000 psia at 1191.2 Btu/lbm enthalpy).

Results

Calculation of off-site doses are based on breathing rates of Reg. Guide 1.3, dose conversion factors from Reg. Guide 1.109, semi-infinite aloud for whole body doses, and off-gas hold up times of 19.4 hrs for Kr and 14.6 days for Xe. As shown in Table 15.4.-3, the resulting doses are well below the SRP 15.4.9

The doses calculated in this analysis and the technical arguments made in NEDO-31400A support the removal of the MSIV Isolation and reactor trip functions from the MSLRM at the Dresden Station.

15.4.11 Thermal Hydraulic Instability Transient

This section covers events that result in a thermal hydraulic instability. Additional information regarding the transient and the system designed to respond to it, namely the Oscillation Power Range Monitor (OPRM) system, is contained in chapters 4 and 7.

15.4.11.1 Identification of Causes and Frequency Classifications

Events such as Reactor Recirculation (RR) pump trips and runbacks, turbine/generator runbacks, loss of feedwater heating, and RR flow controller failures can result in unplanned entry into the high power and low flow region of the power to flow map. Under these conditions, axially varying moderator density in the fuel channels can cause flow oscillations that increase in amplitude. Without manual or automatic suppression, such oscillations can cause the MCPR Safety Limit to be exceeded (Reference 15.4.12.11).

This event is controlled by a system designed for detection and suppression of oscillations in accordance with GDC 10 and 12. The system is the Oscillation Power Range Monitor (OPRM) system. It provides automatic protection for this event, when it is installed and fully functional. For operation prior to the installation of OPRM, or when OPRM is not fully functional, the operator controls the oscillations by scramming the reactor upon entry into the region of power to recirculation flow map when such oscillations are possible.

Anticipated stability-related neutron flux oscillations are those instabilities that result from normal operating conditions, including conditions resulting from anticipated operational occurrences. This category of events is equivalent to the standard terminology for the analysis of events of moderate frequency (Reference 15.4.12.12).

15.4.11.2 Sequence of Events and System Operation

For this event, the plant must be operating in mode 1.

A. As a result of some manual actions or equipment problems (e.g., RR pump runback, loss of feedwater heating), the core power and flow combination may be such that oscillations of neutron flux may be possible.

B. Due to forced flow being inadequate to control density wave transit time up the fuel channels, flux oscillations start and begin to increase in amplitude.

C.1 Without OPRM being installed, armed, and operational, the operator manually scrams the reactor upon recognition of the instability.

C.2 With the OPRM installed, armed, and operational, the operator may be able to take action based on pre-trip alarms to insert control rods or increase flow. If not able to because of the rate of increasing oscillations, the OPRM automatically scrams the reactor before the Safety Limit MCPR is violated.

15.4.11.3 Core and System Performance

The OPRM system contains 4 LPRMs per OPRM cell (using the Bockstanz-Lehmann LPRM assignment methodology described in Reference 15.10.6.3) and requires 1 LPRM input for the cell to be operable. The amplitude setpoint for oscillation magnitude and the number of confirmation counts are specified for the analysis. Since core thermal hydraulic instability is characterized by a consistent period for the oscillations, the OPRM logic includes a check for a set number of consecutive counts as well as a magnitude.

The specified system setpoints are used to determine the hot bundle oscillation magnitude. This information is used, along with empirical data applicable to the fuel in the core, to determine the fractional change of CPR (delta CPR/IMCPR, where IMCPR is initial MCPR).

The Initial (pre-oscillation) MCPR (IMCPR) is determined as the lower of the following:

1. The MCPR following a dual RR pump trip from rated power on the highest allowed flow control line, after the coastdown to natural circulation and after feedwater temperature reaches equilibrium. The assumption is that the core was operating at the Operating Limit MCPR prior to the dual pump trip.

2. The MCPR Operating Limit with the reactor at steady state conditions at 45% core flow on the highest allowed flow control line.

The Final MCPR (FMCPR) is determined using the IMCPR and CPR/IMCPR data (Reference 15.4.12.13).

The FMCPR is then verified to be greater than the Safety Limit MCPR. Alternatively, a minimum IMCPR can be determined for a given Safety Limit and checked against the cycle specific Operating Limit (Reference 15.4.12.14).

If the minimum IMCPR is greater than the Operating Limit determined from other cycle analyses, or the FMCPR is less than the Safety Limit MCPR, the system setpoint may be changed and the reload confirmation performed again. Alternatively, the Operating Limit MCPR may be changed, or the LPRM assignment scheme may be modified.

The above is confirmed for each cycle as part of the reload analysis when OPRM is fully installed and armed.

15.4.11.4 Barrier Performance

Since the successful completion of this analysis demonstrates that the MCPR Safety Limit is not exceeded, fuel-cladding integrity is not challenged.

15.4.11.5 Radiological Consequences

Since fuel-cladding integrity s not challenged, there are no radiological consequences warranting evaluation of this event.

15.4.12 References

1. "General Electric Standard Application for Reactor Fuel," General Electric Company, NEDE-24011-P-A-US.

2. "Exxon Nuclear Methodology for Boiling Water Reactors," XN-NF-80-19(P)(A), Volume 1, Supplements 1 and 2, March 1983.

3. "Rod Drop Accident Analysis for Large Boiling Water Reactors," General Electric Company, NEDO-10527, March 1972.

4. Ackerman, R.J., Gilles, W.P., and Thorn, R.J., "High Temperature Vapor Pressure of UO2," Journal of Chemical Physics, December 1956, Volume 25, No. 6.

5. MacPhee, J., and Lumb, R.F., "Summary Report, PULSTAR Pulse Tests-II," WNY-020, February 1965.

6. Baker, L., Jr., and Tevebaugh, A.D., "Chemical Engineering Division Report, January through June 1964, Section V - Reactor Safety," ANL-6900.

7. Baker, L., Jr., and Tevebaugh, A.D., "Chemical Engineering Division Report, July through December 1964, Section V - Reactor Safety," ANL-6925.

8. Williamson, H.E., and Rowland, T.C., "Performance of Defective Fuel in the Dresden Nuclear Power Station," APED-3894, 1962.

9. L.C. Watson, et al., "Iodine Containment by Dousing in NPD-II," AECL-1130, October 1960.

10. H.R. Diffey, et al., "Iodine Cleanup in a Steam Suppression System," International Symposium on Fission Product Release and Transport Under Accident Condition, April 1956.

11. Commonwealth Edison Topical Report NFSR-0091, "Benchmark of CASMO/ MICROBURN BWR Nuclear Design Methods," Revision 0, Supplement 1 and 2, December 1991, March 1992, and May 1992, respectively; NRC SER letter dated March 22, 1993.

12. NRC SER, Topical Report for Neutronics Methods for BWR Reload Design for Commonwealth Plants, Siegel (NRC) to Kovach (ComEd). February 27, 1992.

13. NRC SER, Commonwealth Edison Company Topical Report NFSR-0091 Benchmark CASMO/MICROBURN BWR Nuclear Design Methods, Patel (NRC) to Kovach (ComEd), March 22, 19993.

14. ComEd letter, Dresden Nuclear Power Station Units 2 and 3, Quad Cities Nuclear Power Station units 1 and 2, Revised Control Rod Sequencing Methods, NRC Docket 50-237/249, 50-254/265 and 50-373/374, P. Piet to T. Murley, January 27, 1993.

15. General Electric, Banked Position Withdrawal Sequence, NEDO-21231, January 1977.

16. Letter, Revised Control Rod Sequencing Methods for the Dresden and Quad Cities Nuclear Power Station, B. Siegel to T. Kovach, September 21, 1990.

17. "Control Room Drop Accident/MSLRM Removal", Bechtel Calculation DR-357-M-004.

18. ANSI/ANS-5.1-1994, "American National Standard for Decay Heat Power in Light Water Reactors," August 23, 1994 (Appendix B).

19. NEDO-31400A, "Safety Evaluation for Eliminating the Boiling Water Reactor Main Steam Line Isolation Valve Closure and Scram Function of the Main Steam Line Radiation Monitors," by GE Nuclear Energy Class I, October 1992.

20. Generic Letter 94-02

21. GE Document NEDO-31960-A Supplement

22. GE Document NEDO-32465-A

23. BNDG 96-011

Table 15.4-2

Table Deleted

Table 15.4-3

RESULTING DOSES FROM THE CONTROL ROOM DROP ACCIDENT

Scenario 1: US NRC Standard Review Plan 15.4.9 Approach to CRDA				
			Dose (Rem)	
Location	Organ	Condenser	Gland Seal	Total
BAB				
	Thyroid	0.91	11.4	12.3
	Whole Body	6.6E-12	4.0E-01	4.7E-01
LPZ				
	Thyroid	2.3E-01	6.0E-01	8.3E-01
	Whole Body	1.7E-01	2.1E-02	3.8E-02

Scenario 2: Release Via the Augmented Offgas System				
			Dose (Rem)	
Location	Organ	Condenser	Gland Seal	Total
BAB				
	Thyroid	0	11.4	11.4
	Whole Body	3.1E-01	4.0E-01	7.1E-01
LPZ				
	Thyroid	0	6.0E-01	6.0E-01
	Whole Body	5.5E-02	2.1E-02	7.6E-02

15.6 DECREASE IN REACTOR COOLANT INVENTORY

This section covers events which involve an unplanned decrease in reactor coolant inventory. These events include inadvertent opening of a safety valve, relief valve, or safety relief valve (SRV); failure of an instrument line carrying reactor coolant outside primary containment; main steam line break outside primary containment; and the failure of reactor coolant pressure boundary piping inside primary containment.

The events and radiological consequences described in this section are not reanalyzed for the current fuel cycle since they continue to be bounded by analyses for previous fuel cycles. The conclusions of these events and radiological analyses are still valid; however, specific details contained in the descriptions and associated results and figures should be used only to understand the analysis and its conclusions. These specific details should not be used as sources of current fuel cycle design information.

All LOCA PCT evaluations performed are reported to the NRC per 10CFR50.46. The UFSAR is marked up for updates within 90 days of the submittal. The 10CFR50.46 letter is on file at the site. Between UFSAR updates and the latest PCT is tracked by Nuclear Fuel Management or the cognizant equivalent.

15.6.1 Inadvertent Opening of a Safety/Relief Valve

The following evaluation of an inadvertent opening of a safety/relief valve shows that this event is not of safety significance. The following information is based on the NRC-approved evaluation of Dresden Unit 2 performed during the Systematic Evaluation Program (SEP).

The inadvertent opening of a safety valve, relief valve, or SRV would result in a decrease in reactor coolant inventory and a decrease in reactor coolant system pressure.

If an SRV or relief valve fails open, it discharges to the suppression pool. The safety valves discharge directly to drywell atmosphere. Although a drywell high-pressure reactor trip might occur if a safety valve fails open, the following analysis conservatively assumes a safety valve discharge would result in a sequence of events similar to a relief valve or SRV discharge.

15.6.1.1 Identification of Causes

The cause of an inadvertent opening of a safety valve, relief valve, or SRV is a malfunction of the valve.

15.6.1.2 Sequence of Events and System Operations

The following sequence of events is assumed for this analysis.

The normal functioning of plant instrumentation and controls is assumed for this incident; specifically, normal operation of the pressure regulator and vessel level control systems is assumed normal. On an inadvertent opening of the relief valve or SRV, the pressure regulator senses the pressure decrease and causes the turbine

Subsequent to the above analysis, the NRC calculated the radiological consequences for the main steam line break outside containment using conservative assumptions in the Safety Evaluation Report (SER). The NRC assumed total iodine activity of 20 μCi/cc, Type F meteorology conditions, 1 m/s wind speed, and an MSIV closure time of 5 seconds. The resultant 2-hour dose at the site boundary was calculated by the NRC to be about 10 rem to the thyroid. With an assumption of 10-second valve closure, the 2-hour thyroid dose was estimated to be 25 rem. These values are significantly less than the 10 CFR 100 guideline dose of 300 rem for thyroid.

As a part of the SEP, the NRC also evaluated the main steam line break outside containment. The NRC's evaluation was based on several assumptions. The analysis used atmospheric dispersion factor (X/Q) values representative of a ground level release for this accident. The ground level release value used for the exclusion area boundary (EAB) was obtained from the results of NRC's review of the SEP Topic II-2.C and did not account for fumigation conditions during the accident. The NRC also based the evaluation on primary coolant mass releases assuming an MSIV closure time of 10.5 seconds rather than the Technical Specification value of 5 seconds or less. Lastly, the NRC assumed the primary coolant concentration to be 20 μCi/cc Iodine-131 instead of the Technical Specification value of 20 μCi/cc gross iodine. The NRC's analyses showed that the exposure guidelines of 10 CFR 100 are met, assuming the coolant concentration is at the shutdown limit and is entirely Iodine-131. The thyroid doses calculated by the NRC were 80 rem at the EAB and 8 rem at the low population zone (LPZ) for this accident.

The Technical Specification limitations on the specific activity of the primary coolant ensure that the 2 hour thyroid and whole body doses resulting from a main steam line failure outside the containment during steady state operation will not exceed small fractions of the dose guidelines of 10 CFR 100. Therefore, the radiological dose consequences are not increased by fuel type or design changes.

15.6.4.6 Increased Steam Flow Assessment

Plant efficiency has been improved due to a combination of changes to the Reactor Water Cleanup (RWCU) system and feedwater heater performance. As a result, steam flow at the licensed thermal power of 2527 MWt is expected to exceed the original rated steam flow rate. Thus, the Main Steam Line Break (MSLB) event was evaluated assuming a maximum steam flow rate of 9.90 Mlbm/hr which corresponds to a maximum feedwater flow rate of 9.87 Mlbm/hr.

As discussed in Section 5.4.4.3.1, the main steam line flow restrictors are sized to choke the flow of the steam/water mixture and limit the fuel velocity. The flow rate out of a postulated MSLB will be the same as the original analysis during the initial choke flow. After the initial choked flow, flow through the break is a function of reactor pressure, and since reactor pressure will remain below 1005 psig, flow out the break should remain bounded by the original analysis (Figure 15.6-1). However, the increase flow rate (during operation, not following the break) could initiate two-phase flow sooner than indicated in Figure 15.6-1, due to increased reactor vessel level swelling. In the absence of a detailed quantitative analysis, conservative bounding conditions are assumed for this scenario. Section 15.6.4.3.4 and Figure 15.6-1 provide a basis for conservatively estimating the mass of coolant loss for an MSLB scenario at the increased steam flow rate, which will be used to assess the associated radiological dose implications. Since steam pressure is unchanged by the increased steam flow, there is no change to the choking flow rate, which is already accounted for in the Section 15.6.4.3.4 and Figure 15.6-1. However, the higher steam flowrate may lead to a slightly earlier onset of two-phase flow by one second, to 4.5 seconds after the start of the MSLB. The earlier onset of two-phase flow would reduce the total mass of steam flow released during the transient but would increase the water mass. Table 15.6-3 compares coolant loss in pounds for both the original and the increased steam flow rate conditions based on Section 15.6.4.3.4. These estimates are considered to be conservatively high.

If two-phase flow is initiated one second sooner, this would result in a 16% increase in the total mass of coolant loss, from which a 32% increase in the liquid mass would be lost to the MSLB prior to MSIV closure. The NRC calculated Exclusion Area Boundary (EAB) and Low Population Zone (LPZ) thyroid doses of 16 and 1.54 rem respectively for a MSLB with iodine spike limit of 4.0 μCi/g and a coolant mass release of 66,000 lbs. The values of the EAB and LPZ distances, and the source of the Dose Conversion Factor (DCF) used by the NRC for calculating the χ/Q value used in the EAB and LPZ dose analysis, are not reported. However, independent calculations using a distance of 1300 meters and a liquid coolant mass release of 66,000 lbs. obtained the same χ/Q value as that reported in the NRC SEP for EAB dose calculations.

The 1300 m distance was used in the LOCA calculation of the Dresden 2 SER dated October 17, 1969 as the "controlling location" with 100 feet elevation above the station grade elevation at the river bluff. This was in addition to LOCA calculations for the 800 m EAB distance. The 1969 LOCA analysis gave higher thyroid doses at the 1300 m "controlling location" than at the 800 m EAB location. ComEd provided dose evaluations at both the 1300 m distance, and at the 800 m distance to the AEC (currently NRC) in response to AEC questions dated February 22, 1974. The evaluations show that the MSLB dose at 1300 m for a ground release is the same as the dose at 800 m for a release at 100-foot elevation.

Per calculation DRE97-0150 Revision 1, the postulated 16% increase in mass of water lost for a MSLB corresponds to a thyroid dose increase from 16 rem to 18 rem at the location that the NRC appeared to use a characterize EAB doses, and from 1.75 rem to 2.2 rem at the LPZ, using the NRC SEP approach for the iodine spike limit of 4.0 μCi/g.

The 10CFR100 allowable limits for iodine spike are 300 rem to the thyroid at both the EAB and LPZ. The NRC SER for Dresden Unit 2 used these 10CFR100 limits as the acceptance limits for iodine spike concentration. In conclusion, the increased offsite dose due to an increased inventory of water mass lost from a MSLB before MSIV closure is less than the 10CFR100 allowable limits of 300 rem to the thyroid for iodine spike of 4.0 μCi/g.

The allowable equilibrium limit and the NRC acceptance limit for Dresden is 10% of the 10CFR100 limit, however the equilibrium limit for Dresden is 0.2 μCi/g, which is 20 times less than the allowable iodine spike. The thyroid dose at the iodine equilibrium limit of 0.2 μCi/g will be 20 times less than the dose at the iodine spike limit of 4.0 μCi/g at the EAB and LPZ, therefore the NRC acceptance limits are met.

In conclusion, the offsite dose increase with an increase of steam mass following a MSLB before the MSIV closure time is less than a small fraction (10%) of the 10CFR100 allowable limits of 300 rem for equilibrium iodine limit 0.2 μCi/g.

Additionally, the estimated coolant loss of 66,000 lbs. from a MSLB with a 10.5 second MSIV closure time is acceptable because 140,000 lbs. of fluid must be lost before the core is uncovered. Since the maximum estimated coolant loss for the new scenario of 76,200 lbs. is also less than the 140,000lbs. needed to uncover the core, this acceptance limit continues to be met.

15.6.5 Loss-of-Coolant Accidents Resulting from Piping Breaks Inside Containment

See the introduction to Section 15.6 for information regarding the use of details from this analysis description which may not be applicable to the current fuel cycle.

A loss-of-coolant accident (LOCA) resulting from piping breaks inside containment would result in the heating and pressurization of containment, a challenge to the emergency core cooling system (ECCS), and the potential release of radioactive material to the environment. The response of the containment to a LOCA is discussed in Section 6.2.1.3.2. The fuel thermal response and ECCS performance are described in Section 6.3.3.

15.6.5.1 Identification of Causes and Frequency Classification

The full range of LOCAs has been analyzed from a small rupture where the makeup flow is greater than the coolant loss rate to a highly improbable circumferential recirculation line break. The initial power level assumed was 2578 MWt. The analyses show that the circumferential recirculation line break, in conjunction with low pressure coolant injection (LPCI) valve failure, would result in the maximum fuel temperature and containment pressure.[11]

This event is classified as a limiting fault, i.e., an event that is not expected to occur but is postulated because the consequences may result in the release of significant amounts of radioactive material.

released from the core. In addition, 50% of the halogen released from the core was assumed to plate out onto internal surfaces of the containment building or onto internal components. The primary containment was assumed to leak at a constant rate of 2.0% of the containment volume per day for the duration of the accident. A 90% halogen removal efficiency of charcoal absorbers of the SBGTS was assumed. It was also conservatively assumed that leakage from the drywell goes directly to the standby gas treatment system without mixing in the reactor building and then to the environment via the 310-foot chimney. Fumigation conditions were assumed for the first half-hour exposure at the site boundary, followed by the most conservative unstable condition. The resultant 2-hour dose at the site was calculated by the AEC to be 185 rem to the thyroid. This value is less than the 10 CFR 100 guideline dose of 300 rem for the thyroid.

In addition to the AEC's SER analysis, the NRC also performed an independent evaluation of the offsite radiological consequences following a postulated LOCA with conservative assumptions as part of the SEP. In this evaluation, the NRC assumed that an outboard MSIV is leaking at 11.5 scfh. The Technical Specification limit is a total maximum pathway leakage for all MSIVs of ≤46 scfh at the 25 psig test pressure. The NRC also estimated a 30-hour delay time for the MSIV portion of the leakage, based on at least an 80-foot length of seismically qualified main steam line downstream of the leaking MSIV. The NRC assumed the leakage to occur at ground level at the turbine stop valve in the turbine building. The total offsite radiological consequences of the LOCA, including containment leakage, were calculated by the NRC to be 36 rem to the thyroid and 2 rem to the whole body at the EAB and 230 rem to the thyroid and less than 1 rem to the whole body in the LPZ. These are also within the offsite radiological consequence guidelines of 10 CFR 100.

Another independent evaluation has been performed by the NRC to estimate radiological consequences of a LOCA while purging the containment. The NRC estimated that the steam released through the purge line prior to post-LOCA closure would result in an incremental dose of 0.76 rem to the thyroid at the EAB and 0.1 rem to the thyroid at the LPZ. These doses when added to the above mentioned SEP review of LOCA doses meet the applicable guidelines of 10 CFR 100.

In 1991, confirmatory calculations of the AEC SER offsite dose calculations were performed. The duplication of the AEC SER offsite dose results confirmed the AEC SER assumptions and input values and established the values for the atmospheric dispersion factors, which were not identified in the AEC SER.

In April, 1997, an evaluation of the consequences of a reduction in the calculated secondary containment free volume on the offsite doses were made. The evaluation and subsequent NRC SER indicated that the offsite dose calculation was not affected because the reactor building volume and associated holdup time are not credited in the calculations.

In June, 1999, an evaluation, and subsequent NRC SER, of the consequences of changing the allowed MSIV leakage from an individual MSIV leakage limit to an aggregate leakage limit of 46 scfh for all MSIVs on the offsite dose was made. Since the maximum allowed leakage from the MSIVs remained the same, that is, not to exceed 46 scfh for all four main steam lines, the total radiological release and offsite dose remained unchanged.

Thus, there is adequate margin in the design of the reactor and containment to limit the consequences of large postulated accidents and protect the public.

15.6.5.5.2 Radiological Consequences - Control Room Dose Rates

A control room dose analysis was performed in accordance with the guidance of NUREG-0737,[26] Item III.D.3.4 to determine compliance with the radiological requirements of General Design Criterion (GDC) 19 and SRP 6.4.[27] The analysis considered the LOCA to be the radiological design basis accident (DBA) and assumed simultaneous main steam isolation valve leakage. Furthermore, MSIV leakage at the Technical Specification limit was assumed for the analysis. The results of this analysis are considered conservative. Several natural mechanisms would reduce or delay the radioactivity prior to release to the environment. However, credit was taken only for iodine plateout on surfaces of the steam lines and condenser and radioactive decay prior to release.

Subsequently, the original analysis was revised due to two major deficiencies. One deficiency involved the assumption that only 10 ft^3/min of unfiltered air entered the control room habitable zone. The results of a walkdown revealed that the habitable zone boundary could leak in excess of the 10 ft^3/min assumed in the original analysis. This leakage was actually calculated to be 263 ft^3/min. The second deficiency involved crediting a SBGTS efficiency of 99%; whereas, the Technical Specification limit is only 95%. The resultant dose calculation with these revised input parameters was reduced to within its acceptance limits by requiring initiation of the control room emergency filtration system within 40 minutes after an accident.

The infiltration to the control room HVAC system ductwork has been discussed in Section 6.4.

In April, 1997, an evaluation of the consequences of a reduction in the calculated secondary containment free volume on the control room dose was made. The evaluation, and subsequent NRC SER, showed that the reduction in margin to the control room dose limit caused by the decrease in secondary containment volume was offset by assuming an increase to the removal efficiency for the SBGTS charcoal from 90 to 95%. The resultant thyroid dose to the control room operator was calculated to be 23 rem.

In June, 1999, an evaluation, and subsequent NRC SER, of the consequences of changing the allowed MSIV leakage from an individual MSIV leakage limit to an aggregate leakage limit of 46 scfh for all MSIVs on the control room dose was made. Since the maximum allowed leakage from the MSIVs remained the same, that is, not to exceed 46 scfh for all four main steam lines, the total radiological release and control room dose remained unchanged.

15.6.5.5.2.1 Methodology

The guidelines given in SRP 6.4[27] and Regulatory Guide 1.3[28] have been used with the exceptions of the X/Q for the control room, the treatment of the secondary containment, and plateout of iodines during transportation within pipes. Realistically, the components of the main steam lines and the turbine-condenser complex would remain intact following a design basis LOCA. Therefore, plateout of iodines on surfaces of the main steam lines and the turbine-condenser complex would be expected.

Figure 15.6-4 shows the radiological control room model used for activity released through the SBGTS and through the MSIVs. The total control room 30-day integrated dose would be equal to the sum of the two dose models. The input parameters used to develop the activity levels in the control room are shown on Table 15.6-9.

15.6.5.5.2.2 Assumptions and Bases

Regulatory Guide 1.3[28] has been used to determine activity levels in the containment following a design basis LOCA. Activity releases are based on a containment leakage rate of 1.6% per day. Table 15.6-9 lists the assumptions and parameters used in the analysis and dose point locations. The majority of the containment leakage would be collected in the reactor building and exhausted to the atmosphere through the SBGTS as an elevated release from the main stack. Any SBGTS bypass leakage has been quantified by assuming that all MSIVs leak at 11.5 scfh per main steam line when tested at 25 psig. The Technical Specification limit is a total maximum pathway leakage for all MSIVs of $\leq$ 46 scfh at the 25 psig test pressure. The leak rate was corrected to the containment design pressure using the laminar flow extrapolation factors from ORNL NSIC.[29]

Leakage past the isolation valves could be released through the outboard MSIV stems into the steam tunnel, or it could continue down the steam lines to the stop valves and into the turbine-condenser complex. The steam tunnel is exhausted by the SBGTS filtration system, thus eliminating it as a bypass pathway. The MSIV leakage down the steam piping travels to the turbine-condenser complex where it is released as a ground level release at a rate of 1% of the turbine-condenser volume

per day. This leak rate is consistent with the assumptions used for the control rod drop accident in SRP 15.4.9.[30] This assumption is conservative since the volumetric leakage from the condenser at 1% per day is greater than the MSIV leakage from the drywell. The MSIV leakage passes through three different volumes which provide holdup and plateout. The first volume consists of the steam lines between the inboard and outboard isolation valves, the second volume consists of the steam lines between the outboard isolation valves and the turbine stop valves, and the third volume includes the steam lines after the turbine stop valves and the turbine-condenser complex. The leakage path was conservatively treated as a single volume with a volume of 1.7×10^5 cubic feet and a surface area of 6.5×10^5 square feet. The iodine removal rates were calculated for elemental and particulate iodines using a deposition velocity of 0.012 cm/s. The removal of organic iodine through plateout is not credited. Elemental and particulate iodine decontamination factors of over 100 can be calculated for the small travel distances and large travel times down the steam lines, refer to NUREG/CR-009 Section 5.1.2.[31]

MSIV leakage to the turbine building would be exhausted by the heating, ventilation, and air conditioning (HVAC) system if it was operating. Additional plateout on ductwork, fans, and unit coolers would further minimize the iodine releases. If the HVAC system were not operating, then any bypass flow would tend to collect in the building and be subject to additional decay and plateout which are not credited in the analysis.

The activity which enters the main control room may be the result of bypass leakage, the SBGTS exhaust in the outside air, or both, depending on wind direction. It is possible for the intake to be exposed to activity from both sources at the same time. Because the SBGTS exhaust is elevated, the concentrations from this source at the intake would be less than those due to bypass leakage. It is conservatively assumed that the activity concentration at the intake is due to concurrent bypass leakage and chimney releases for the duration of the event.

15.6.5.5.2.3 Atmospheric Dispersion Factor

The following discussion is an explanation of the reasons for the use of the Halitsky X/Q methodology and a value of $K_c = 2$ instead of the Murphy methodology[32] which SRP 6.4[27] suggests as an interim position.

Historically, the preliminary work on building wake X/Qs was based on a series of wind tunnel tests by J. Halitsky, et al.[33] In 1974, K. Murphy and K. Camp of the NRC published their paper based on a survey of existing data. This X/Q methodology, which presented equations without derivation or justification, was adopted as the interim methodology in SRP 6.4 in 1975. Since then, a series of actual building wake X/Q measurements have been conducted at Rancho Seco[37] and several other papers have been published documenting the results of additional wind tunnel tests.

Murphy[32] suggested the following equation for the calculation of X/Q.

$$X/Q = K_c/AU$$

where:

Table 15.6-3

EFFECT OF MAIN STEAM LINE ISOLATION VALVE CLOSURE TIME

Steam Line Isolation Valve Closure Time[1]	Net Mass of Water and Steam Lost from Pressure Vessel (lb)	
	With Feedwater	Without Feedwater
3.5 seconds	3,000	13,000
10.5 seconds	37,000	66,000 (for rated steam flowrate)[2] 76,200 (for increased steam flowrate)[3]

Notes:

1. Includes 0.5-second detection time.
2. The net mass lost is comprised of 21,000 lbs. of steam and 45,000 lbs. of water.
3. The net mass lost is comprised of 17,000 lbs. of steam and 59,200 lbs. of water.

Table 15.6-9

LOSS-OF-COOLANT ACCIDENT INPUT PARAMETERS FOR CONTROL ROOM DOSE ANALYSIS

A.	Data and Assumptions used to Estimate Radioactive Source from Postulated Accidents:		
	1.	Power level (MWt)	2527
	2.	Burnup	N/A
	3.	Fission products released from damaged fuel	100%
	4.	Iodine fractions:	
		a. Organic	0.04
		b. Elemental	0.91
		c. Particulate	0.05
B.	Data and Assumptions used to Estimate Activity Released:		
	1.	Primary containment leak rate (total), percent per day	1.6
	2.	Leak rate through each MSIV, ft^3/hr (standard) at 25 psig	11.5
	3.	Number of MSIVs	4
	4.	Total leak rate through MSIVs, ft^3/h (standard) at 25 psig	46.0
	5.	Extrapolation factor for 48 psig design pressure	1.73
	6.	Total leak rate through MSIVs, ft^3/h (standard) at 48 psig	79.6
	7.	Volume of primary containment (mixed volume), (ft^3)	278,000
	8.	Primary containment leak rate which goes to secondary (percent per day)	1.44
	9.	Primary containment leak rate which goes through MSIV (percent per day)	0.16
	10.	SBGTS adsorption and filtration efficiencies (percent)	
		a. Organic iodines	95
		b. Elemental iodines	95
		c. Particulate iodines	95
	11.	Secondary containment leak rate (percent per day)	140.8
	12.	Leak rate from turbine-condenser complex (percent per day)	1
	13.	Plateout removal constant (MSIV leak rate only), 1/second	
		a. Elemental iodine	1.503×10^{-3}
		b. Particulate iodine	1.503×10^{-3}
		c. Organic iodine	0

Table 15.6-9 (Continued)

LOSS-OF-COOLANT ACCIDENT INPUT PARAMETERS FOR CONTROL ROOM DOSE ANALYSIS

14. Dispersion Data (at intake) (s/m^3)

	MSIV Leakage	SBGTS (stack)
0—2 hr	1.29×10^{-3}	7.00×10^{-4}
2—8 hr	1.29×10^{-3}	6.45×10^{-6}
8—24 hr	7.61×10^{-4}	3.81×10^{-6}
24—96 hr	4.84×10^{-4}	2.42×10^{-6}
96—720 hr	2.13×10^{-4}	1.07×10^{-6}

C. Data and Control Room:

1. Volume of control room emergency zone, (ft^3) — 8.1×10^4
2. Volume of control room proper (ft^3) — 6.4×10^4
3. Control room filter unit start (following LOCA); min — 40
4. Control room intake flow (0-40 min), ft^3/min (standard) — 2463
5. Control room intake flow (40 min to 720 hours) — 2063
6. Control room intake charcoal adsorption efficiencies (percent)
   a. Organic — 99
   b. Elemental — 99
   c. Particulate — 99
7. Unfiltered in leakage, ft^3/min (standard) — 263
8. Control room cleanup recirculation flowrate, ft^3/min (standard) — 0
9. Occupancy factors:
   0—1 day — 1.0
   1—4 day — 0.6
   4—30 day — 0.4
10. Effective X/Q, (s/m^3):

	MSIV leakage	SBGTS (chimney)
0—2 hr	1.29×10^{-3}	7.00×10^{-4}
2—8 hr	1.29×10^{-3}	6.45×10^{-6}
8—24 hr	7.61×10^{-4}	3.81×10^{-6}
24—96 hr	2.90×10^{-4}	1.45×10^{-6}
96—720 hr	8.25×10^{-5}	4.28×10^{-7}

Table 15.6-10[1]

30-DAY POST-LOCA CONTROL ROOM DOSES (INTEGRATED)

	Doses (rem)		
	Thyroid	Wholebody	Beta
MSIV Leakage			
Activity inside control room	7.21	1.32×10^{-2}	0.51
Plume shine	--	2.03×10^{-3}	--
Direct shine	--	1.01×10^{-1}	--
Stack Release			
Activity inside control room	15.75	2.88×10^{-1}	9.19
Plume shine	--	1.98×10^{-2}	--
Total control room doses	22.96	0.424	9.70
SRP 6.4 Guidelines	30	5	30

1. The values in this table were determined to be unchanged due to the introduction of ATRIUM-9B fuel since the source terms are based on the TID 14844.

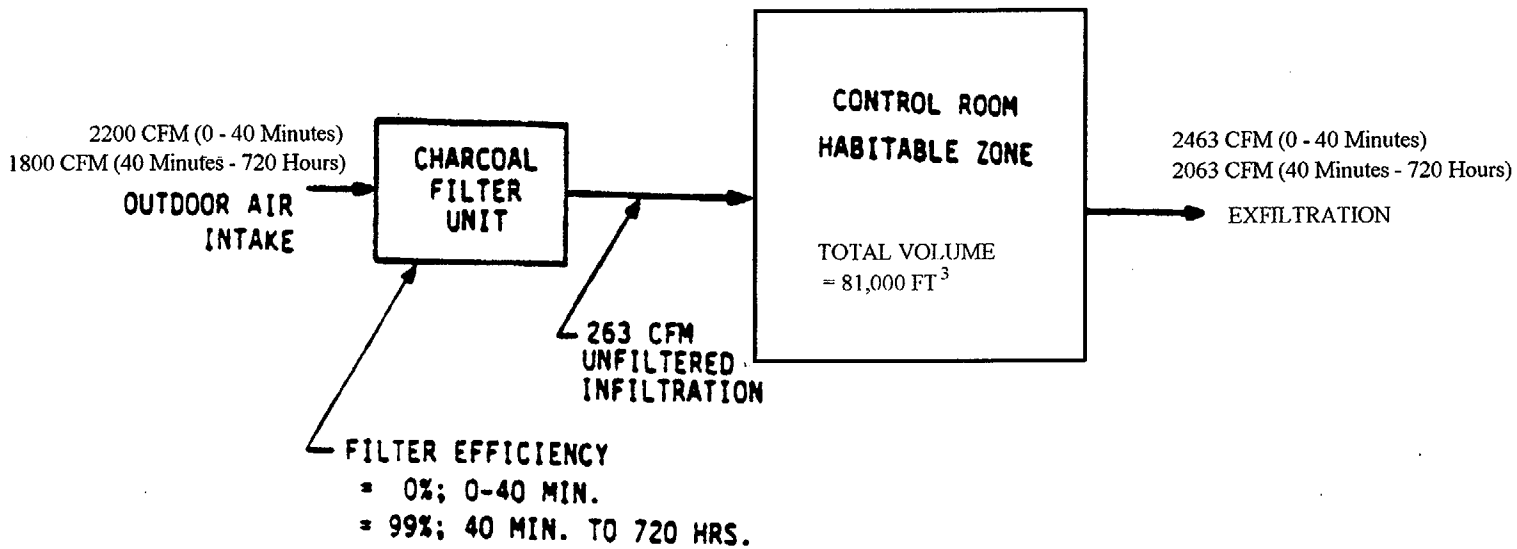

UFSAR REVISION 4, JUNE 2001

DRESDEN STATION
UNITS 2 & 3

DRESDEN CONTROL ROOM
DOSE ANALYSIS MODEL

FIGURE 15.6-4

Radiological consequences due to equipment failures and operator errors, as described in Section 11.2, are minimal and certainly less severe than those due to the seismic damage.

15.7.3 Design Basis Fuel Handling Accidents During Refueling

See the introduction to Section 15.7 for information regarding use of details from this analysis description which may not be applicable to the current fuel cycle.

15.7.3.1 Identification

During a refueling operation the primary containment (drywell-suppression chamber) and the reactor vessel are open; the secondary containment (reactor building) serves as the major barrier to the release of radioactive materials. The accident is assumed to occur when a fuel assembly is accidentally dropped onto the top of the core during fuel handling operations.

15.7.3.2 Designed Safeguards

The reactor core is designed to remain subcritical with one control rod fully withdrawn and all other control rods fully inserted, even if it is assumed that a fresh fuel assembly is dropped into an empty fuel space in an otherwise fully constituted core. At least two control rods adjacent to the empty fuel space would have to be withdrawn for a nuclear excursion to occur.

With the reactor mode switch in STARTUP, a rod withdrawal interlock prevents any withdrawal whenever the travel limit switch indicates that the platform is over the reactor core.

With the reactor mode switch in REFUEL or STARTUP, a rod withdrawal interlock prevents any withdrawal whenever the travel limit switch in combination with the hoist load switch on the refueling platform indicates that the platform is carrying fuel over the reactor core.

With the reactor mode switch in REFUEL, a rod withdrawal interlock prevents the withdrawal of more than one control rod. When any one rod position indicator shows that a rod is withdrawn from the fully inserted position, the interlock prevents the withdrawal of any other rod.

When any rod position indicator shows a rod is withdrawn, an interlock prevents the movement of the refueling platform toward a position over the reactor core while the hoists are carrying fuel.

Each fuel hoist is equipped with a load limit switch and two independent travel limit switches to prevent damage due to upward movement. To drop the fuel assembly, either: (1) the assembly bail, the fuel grapple, or the grapple cable would have to break, (2) the grapple opens due to malfunction or (3) the bundle was never fully latched and the friction force holding the bundle is overcome by gravity. Section 9.1.4 provides additional details regarding refueling platform controls and interlocks which would prevent the occurrence of such an event.

G. It is assumed that the refueling mast adds kinetic energy (when included in the analysis), and dissipates all of this energy during impact. Upon impact, half the energy is absorbed by the dropped fuel assembly.

H. The current GE analysis for the Fuel Handling Accident (FHA) as found in Reference 7 analyzes the drop of a GE-11 fuel assembly. The GE-11 fuel assembly has a 9x9 fuel rod array as opposed to the 8x8 fuel rod array in a GE-5 fuel assembly. Previous versions of GESTAR have analyzed the 8x8 fuel assembly, but assumed a lower drop height and a lighter refueling mast. GESTAR states that the radiological consequences for 8x8 assemblies is 84% of that reported for 7x7 fuel assuming 111 fuel rods fail.

I. Dresden Unit 1 fuel is assumed to be bounded by the Dresden Unit 2/3 fuel due to the significant weight difference and the lower exposures associated with Dresden Unit 1 fuel. Unit 1 fuel will never be loaded into Units 2 or 3, but the FHA over the core is the bounding event for a bundle drop in the spent fuel pool. Since Unit 1 fuel is stored in the Unit 2/3 pools, Unit 1 fuel must be addressed as above.

15.7.3.4.2 Analysis and Results

Because of the complex nature of the impact and the resulting damage to fuel assembly components, a rigorous prediction of the number of failed rods is not possible. For this reason, a simplified energy approach is taken and numerous conservative assumptions are made to assure a conservative estimate of the number of failed rods.

The number of failed fuel rods is determined by balancing the energy of the dropped fuel assembly against the energy required to fail a rod. No energy is considered to be absorbed by fuel pellets. The energy available for cladding deformation is considered to be proportional to the mass ratio:

$$\frac{\text{mass of cladding}}{\text{mass of assembly - mass of fuel pellets}}$$

The kinetic energy acquired by the falling fuel assembly/refueling mast and the amount absorbed by the cladding of the struck assemblies during the first impact is:

	Energy Dissipated by the first impact	ratio of cladding mass to non-fuel assembly components mass	Energy absorbed by the cladding of the impacted bundle
SPC: ATRIUM-9B Assembly Only (ft-lb.)	611 * 34 = 20774 ft-lb.	0.48	0.5 * 20774 * 0.48 = 4986 ft-lb.
SPC: ATRIUM-9B Assembly plus Refueling Mast (ft-lb.)	(611+620)*34 = 41854 ft-lb	0.48	0.5 * 41854 * 0.48 = 10045 ft-lb.
SPC: 9x9-1 Assembly plus Refueling Mast (ft-lb.)	(629+620)*34 = 42466 ft-lb.	0.56	0.5 * 42466 * 0.56 = 11890.48 ft-lb.
SPC: 9x9-2 Assembly plus Refueling Mast (ft-lb.)	(629+620)*34 = 42466 ft-lb.	0.56	0.5 * 42466 * 0.56 = 11890.48 ft-lb.
GE 8x8 Assembly plus Refueling Mast (ft-lb.)	(650+620)*34 = 43146 ft-lb.	0.519	0.5 * 43146 * 0.519 = 11196.39 ft-lb.
SPC 8x8 Assembly plus Refueling Mast (ft-lb.)	(645+620)*34 = 43010 ft-lb.	0.56	0.5 * 43010 * 0.56 = 12042.80 ft-lb.

where:

611 = approximate weight of the fuel assembly (SPC ATRIUM-9B) with channel and channel fastener
650 = approximate weight of the fuel assembly (GE 8x8) with channel and channel fastener
645 = approximate weight of the fuel assembly (SPC 8x8) with channel and channel fastener
629 = approximate weight of the fuel assembly (SPC 9x9-2) with channel and channel fastener
619 = weight of the mast (GE)
620 = weight of the mast assumed in the SPC analysis
34 = drop height

The dropped fuel assembly was considered to impact at a small angle, subjecting all the fuel rods in the dropped assembly to bending moments. The fuel rods are expected to absorb little energy prior to failure as a result of bending. For this reason, it is assumed that all the rods in the dropped assembly fail.

The assembly was assumed to tip over and impact horizontally on top of the core. The remaining energy was used to predict the number of additional rod failures.

The number of fuel rod failures caused by compression is determined as follows:

Evaluation Results for ATRIUM-9B Fuel, SPC 9x9-1, SPC 9x9-2, SPC 8x8 & GE 8x8

	Fuel Rod Failures Caused by Compression During First Impact	Fuel Rod Failures During the First Impact	Fuel Rod Failures Caused by Tipping Impact	Total Number of Fuel Rod Failures	
SPC: ATRIUM-9B Assembly Only (ft-lb.)	0.5 * 20774 * 0.48 224 ft-lb. = 23 rods	72 rods + 23 rods 95 rods failed	0.5 * 611 * 0.48 * 7.5 224 ft-lb. = 5 rods	First Impact Tipping Impact	95 rods + 5 rods 100 rods failed
SPC ATRIUM-9B Assembly plus Refueling Mast (ft-lb.)	0.5 * 41854 * 0.48 224 ft-lb. = 45 rods	72 rods + 45 rods 117 rods failed	0.5 * 1231 * 0.48 * 7.5 224 ft-lb. = 10 rods	First Impact Tipping Impact	117 rods + 10 rods 127 rods failed
SPC: 9x9-1 Assembly plus Refueling Mast (ft-lb.)	0.5 * 42466 * 0.56 250 ft-lb. = 48 rods	80 rods + 48 rods 128 rods failed	0.5 * (629+620) * 0.56 * 7.5 250 ft-lb. = 11 rods	First Impact Tipping Impact	128 rods + 11 rods 139 rods failed
SPC: 9x9-2 Assembly plus Refueling Mast (ft-lb.)	0.5 * 40256 * 0.56 250 ft-lb. = 45 rods	79 rods + 45 rods 124 rods failed	0.5 * (629+620) * 0.56 * 7.5 250 ft-lb. = 11 rods	First Impact Tipping Impact	127 rods + 11 rods 138 rods failed
GE 8x8 Assembly plus Refueling Mast (ft-lb.)	0.5 * 43146 * 0.519 250 ft-lb. = 44.79 rods	63 rods + 44.8 rods 107.8 rods failed	0.5 * 650 * 0.519 * 6.67 250 ft-lb. + 0.5 * 619 * 0.519 *13.3 250 ft-lb. = 4.5 + 8.55 rods = 13.0 rods	First Impact Tipping Impact	107.8 rods + 13.0 rods 120.8 rods failed for an 8x8 with 63 fuel rods
SPC 8x8 Assembly plus Refueling Mast (ft-lb.)	0.5 * 43010 * 0.56 332 ft-lb. = 37 rods	63 rods + 37 rods 100 rods failed	0.5 * (645+620) * 0.56 * 7.5 332 ft-lb. = 8 rods	First Impact Tipping Impact	100 rods + 8 rods 108 rods failed for an 8x8 with 63 fuel rods

where:
0.48 = ratio of cladding material mass to non-fuel assembly components mass (SPC ATRIUM-9B)
224 ft-lb. is the energy absorbed by the cladding prior to failure (SPC ATRIUM-9B)
0.5 = fraction absorbed by the struck assemblies
7.5 = midplane change in height of the assembly when tipping on its side (SPC)
13.3 = change in height of the grapple when tipping occurs (GE)
6.67 = midplane change in height of the assembly when tipping on its side (GE)
1231 = weight of the ATRIUM-9B fuel assembly and the refueling mast (SPC)
611 = approximate weight of the fuel assembly (SPC ATRIUM-9B) with channel and channel fastener
650 = approximate weight of the fuel assembly (GE 8x8) with channel and channel fastener; 645 - approximate weight of the fuel assembly (SPC 8x8)
619 = weight of the mast (GE)
629 = approximate weight of the fuel assembly (SPC 9x9-2) with channel and channel fastener
620 = weight of the mast assumed to the SPC analysis.

The current GE analysis which determines the number of GE fuel rods failing as the result of a fuel bundle drop uses methodology presented in Reference 7. This analysis is based on a GE-11 assembly which has a 9x9 fuel rod configuration.

15.7.3.4.3 Radiological Consequences

15.7.3.4.3.1 Fission Product Release from Fuel

Fission product release estimates for the expected fuel rod failures are based on the following assumptions:

A. The reactor fuel has an average irradiation time of 1000 days at 2527 MWt up to 24 hours prior to fuel assembly drop.

B. As in the control rod drop accident, a maximum of 1% of the noble gas activity and a maximum of 0.5% of the halogen activity is in the fuel rod plenums. Negligible solid or particulate activity would be released from the fuel and any such release would be absorbed in the reactor pool water; and

C. The peaking factor used to get the curie content per rod is 1.0.

The quantities of fission products calculated to be released from the failed fuel to the water from the initial core analysis of 92 fuel rod failures for 7x7 fuel is bounding and are:

Fission Product	Amount Released (curies from Fuel
Noble Gases (Xe, Kr)	5×10^3
Halogens (Br, I)	3×10^3

15.7.3.4.3.2 Airborne Effects Over the Drywell Head Cavity

The ventilation ducts which would have the greatest influence on any activity released to the drywell head cavity as a consequence of the refueling accident are 16 openings located on the periphery of the head cavity, as discussed in Section 9.4. Those openings located around the fuel pool and the dryer-separator storage pool would not be of any importance until the time that fission products have diffused from the reactor cavity to these locations. The time required for this diffusional process would be on the order of hours. Since approximately a 51-foot head of water exists between the surface of the drywell head cavity water and the top of the reactor core, the only activity of importance which could escape initially to the surface of the drywell head cavity water would be noble gases. If the noble gases are released within a couple of feet of the peripheral exhaust ducts, this activity would be removed within a short period of time to the reactor building exhaust plenum header. The radiation level in the exhaust duct would be sufficient to isolate secondary containment, as described in Section 6.2.3. By reducing the normal exhaust flowrate from 1 air change per hour to 1 air change per 24 hours, the effectiveness of the 16 exhaust ducts around the drywell head cavity would be reduced by a factor of 1/24. It would result in negligible air flow over the drywell head cavity. As a result of this reduced flow, thermal convection flow would be the controlling method for mixing the activity released from the drywell head cavity to the secondary containment atmosphere.

The largest of these radiation exposures is well below the limits of 10 CFR 100. For the failure of 445 rods, the calculated upper bound, the doses are at most only 6.4 x 10^{-4} of 10 CFR 100 guideline dose limits.

Tables 15.7-6, 15.7-7, and 15.7-8 summarize the radiological releases and calculated radiological effects assuming 111 fuel rod failures for 7x7 fuel. The largest of the radiation exposures in Table 15.7-8 is well below the limits of 10 CFR 100.

As a part of the Systematic Evaluation Program (SEP), the NRC reviewed two analyses to evaluate the radiological consequences of fuel damaging accidents: the 7x7 refueling accident analysis described above and an AEC prepared analysis presented in the Safety Evaluation Report for Dresden Unit 2. On the basis of the results and a comparison of the assumptions used in these studies to the assumptions suggested in Regulatory Guide 1.25, the NRC concluded that the radiological consequences would be appropriately within the guidelines of 10 CFR 100.

15.7.3.5 Radiological Reassessment

A radiological reassessment using 34 feet for a drop height was performed by GE (Reference 7). This reassessment compared the number of fuel rod failures assuming a fuel assembly and the refueling mast falls.

{PRIVATE }	ATRIUM-9B	GE 8x8 (limiting)	SPC 8x8	SPC 9x9-2
Fuel rods per assembly	72	63	63	79

Per Reference 7, the radiological consequences for 8x8 fuel will be less than 84% of those values presented in Table 15.7-8 for a 7x7 core which assumes 111 failed 7x7 rods.

The ATRIUM-9B assembly is in a 9x9 configuration with 72 fuel rods per assembly. For the purposes of this evaluation, it is conservatively assumed that the fractional plenum activity for any 9x9 rod will be 49/72, or 0.68 times the activity in a 7x7 rod. Based on the assumption that 127 (Reference 10) 9x9 rods fail compared to 111 for a 7x7 core, the relative amount of activity released for ATRIUM-9B is (127/111) (0.68) = 0.78 times the activity released for a 7x7 core. In other words, the radiological consequences for ATRIUM-9B will be less than 78% of those values presented in Table 15.7-8 for a 7x7 core which assumes 111 failed 7x7 rods.

The assessment of the radiological consequences of the Fuel Handling Accident for other fuel types is performed in a similar manner.

Summarizing in tabular form:

Fuel type	Fractional Plenum Activity per rod compared to a 7x7 rod	Calculated number of failed fuel rods	Relative Amount of Activity Released when compared to a 7x7 core	Radiological Consequences as a percentage of the values reported in Table 15.7-8
ATRIUM-9B	49/72 = 0.68	127	(127/111) * (.68) = 0.78	78%
SPC 9x9-2	49/79 = 0.62	138	(138/111) * (.62) = 0.77	77%
SPC 9x9-1	49/80 = 0.61	139	(139/111) * (.61) = 0.76	76%
SPC 8x8	49/63 = 0.78	108	(108/111) * (.78) =0.76	76%
GE 8x8	49/63 = 0.78	120.8	(120.8/111) * (.78) = 0.85	85%
GE 7x7	49/49 = 1.0	111	1.0	100%

Mixed Fuel Types

The results of an SPC assembly dropping on a GE assembly or vice versa is bounded by the results of the above analyses due to the similarity in assembly weights, height and materials.

continues to deteriorate) would be similar to the response for the MSIV closure event. The peak vessel pressure experienced in this event would be less than in the MSIV closure event.

B. Reactor Shutdown by RPT and SBLC (No ARI)

In the event that insertion of control rods via ARI is not achievable, the SBLC system would be utilized as an alternative method of achieving reactor shutdown.

The operator actions associated with this event would be similar to those described in Section 15.8.1.3.4.

15.8.5.4 Barrier Performance

This event would result in cladding oxidation of less than 1% by volume. Peak fuel rod enthalpy would be less than 280 cal/g. Very few (if any) fuel rod perforations would be experienced.

15.8.5.5 Radiological Consequences

The radiological consequences would be minimal due to the small (if any) number of full rod perforations.

15.8.6 Increased Steam Flow Evaluation

Plant efficiency has been improved due to a combination of changes to the Reactor Water Cleanup (RWCU) system and feedwater heater performance. As a result, steam flow at the licensed thermal power of 2527 MWt is expected to exceed the original rated steam flow rate. Thus, the ATWS events were evaluated assuming a maximum steam flow rate of 9.90 Mlbm/hr which corresponds to a maximum feedwater flow rate of 9.87 Mlbm/hr. The acceptance criteria for the evaluation are:

1. Reactor Coolant Pressure Boundary remaining below emergency pressure limits (i.e., 1500 psig).
2. Containment pressure remaining below design limits, and suppression pool remaining below local saturation temperature.
3. Maintain a coolable geometry.
4. Radiological release remaining within 10CFR100 allowable limits.
5. Equipment necessary to mitigate the postulate ATWS functioning in the environment (pressure, temperature, humidity, and radiation) predicted for the ATWS event.

The evaluation addressed ATWS-RPT setpoint of 1250 psig, a main steam flow rate of 9.9 Mlbm/hr, and use of non-GE fuel with different void and Doppler coefficients. That evaluation (referred to as the Bounding Assessment in the following discussion) addresses the first four criteria.[3]

The ATWS/MSIV Closure (MSIVC) event is the basis for the assessment of peak vessel pressure. The Bounding Assessment was based on previous generic analyses and concluded that the peak reactor vessel pressure for an ATWS would increase but would remain less than the 1500 psig acceptance criterion.

The Bounding Assessment discusses containment impact based on the ATWS/Inadvertently Open Relief Valve (IORV) event. This is bounding for other ATWS events, including ATWS/MSIVC. The Bounding Assessment for an ATWS mitigated by ARI (ATWS-ARI) concluded that the peak bulk pool temperature of 149 F previously found for Dresden remains bounding for the suppression pool. The Bounding Assessment for an ATWS mitigated by SLCS (ATWS-SLCS) concluded that the peak bulk pool temperature is estimated to increase to 192 F based on previous generic studies and Dresden-specific parameters (including a main steam flow rate of 9.9 Mlbm/hr, and use of non GE fuel with different void and Doppler coefficients). Based on previous generic ATWS analyses of quenching and pool mixing, the Bounding Assessment concludes that local saturation temperature will not be exceeded for a peak pool temperature of 192 F. The Bounding Assessment cites a previous value of containment pressure of 12.7 psig and estimated that the higher estimated peak bulk pool temperature (for ATWS-SLCS) would increase containment pressure by less than 3 psi. Based on these results from the Bounding Assessment, the containment pressure is maintained less than design (i.e., 62 psig), and the suppression pool is maintained below the local saturation temperature. Therefore, Dresden continues to meet the second acceptance criterion.

The Bounding Assessment reported that a specific assessment of the impact of the changes on fuel integrity (i.e., maintaining a coolable geometry) was not necessary due to the large margins in previous generic analyses. Also, radiological consequences would remain well below the 10CFR100 guidelines. Therefore, Dresden continues to meet the third and fourth acceptance criteria.

The Bounding Assessment does not address the fifth criteria other than noting that a previous generic assessment had concluded that operability of ATWS mitigation equipment would not be impaired by the ATWS event. Based on the results above for the changes in steam flow, etc., it is concluded that local environmental conditions are not adversely changed for an ATWS mitigated by ARI because the peak bulk pool temperature of 149 F previously found for Dresden remains bounding for the suppression pool. For an ATWS mitigated by SLCS (a backup shutdown method needed only if ARI fails), the Bounding Assessment concluded that there would be an increase in the peak bulk temperature of the suppression pool (Torus). This would increase ambient air temperature in the vicinity of the suppression pool slightly. Because of the large physical separation between the Torus (in the Reactor Building basement) and the SLCS pumps (on the fourth floor of the Reactor Building), it is concluded that the SLCS environment is not impacted. The Recirc Pump Trip (RPT) function would not be impacted by the increased pool temperature because RPT would function long before the suppression pool temperatures would reach its peak.

15.8.7 References

1. "Studies of ATWS for Dresden 2, 3 and Quad Cities 1, 2 Nuclear Power Stations," General Electric Company, NEDE-25026, December 1976.

2. "Main Steam Isolation Closure Event with ATWS/RPT and ARI for Dresden 2, 3 and Quad Cities 1, 2 Nuclear Generating Plants," General Electric Company, NSE-45-0880, August 1980.

3. "Bounding ATWS Assessment for Dresden 2/3," General Electric, GENE A13-00419-01, Revision 1, July 1998.