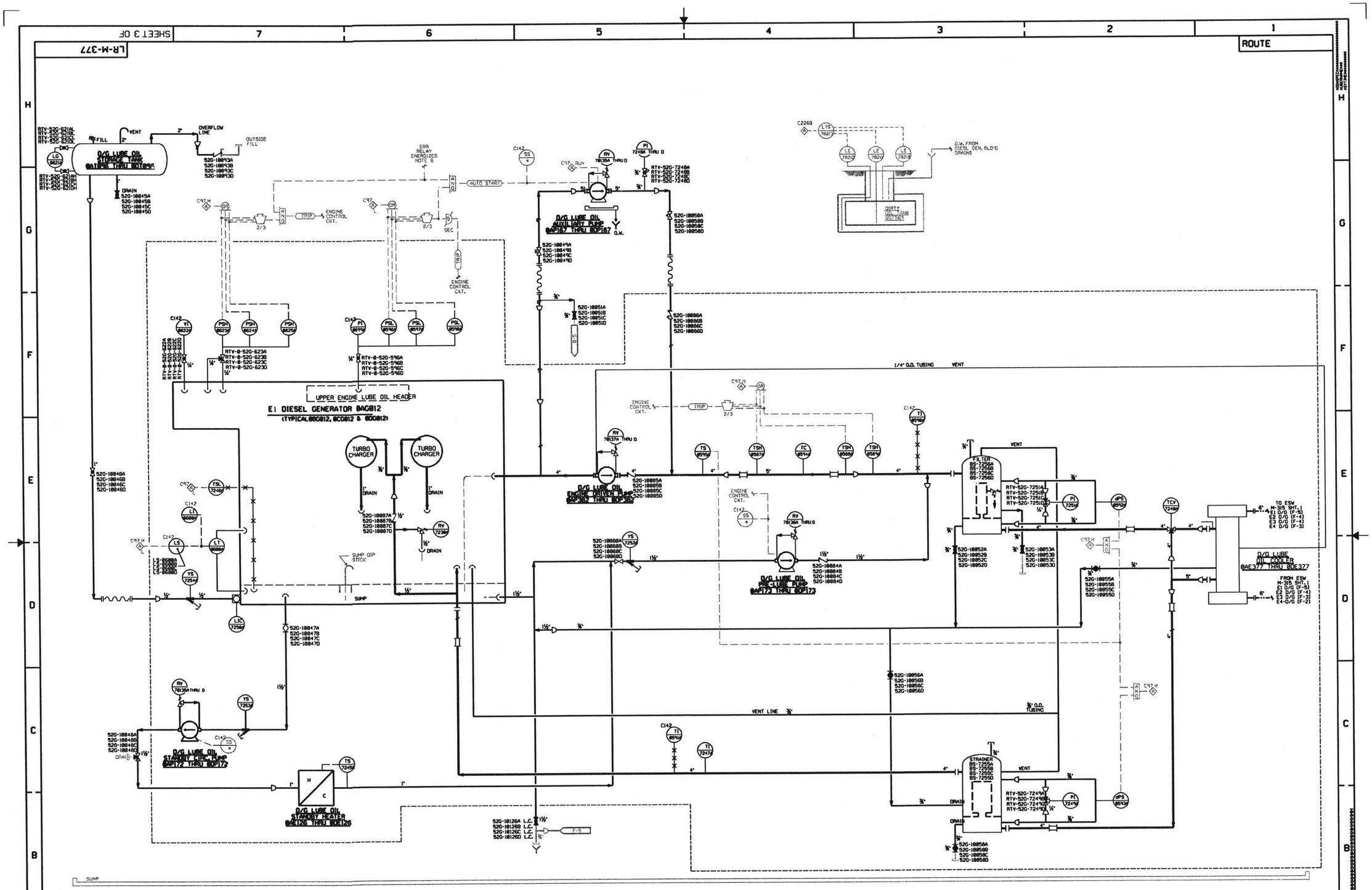

NOTES:

1. THIS DRAWING INCLUDES THE FOLLOWING LICENSE RENEWAL SYSTEMS:
   ED - EMERGENCY DIESEL GENERATOR
2. THIS DRAWING IS BASED ON P&ID M-377 SHEET 3 REV 33

THIS SHEET FOR COMMON ONLY

MECHANICAL

LICENSE RENEWAL DRAWING
DIESEL GENERATOR AUXILIARY SYSTEMS
(LUBE OIL SYSTEM)

PEACH BOTTOM APS UNITS 2 & 3
EXELON

SHEET 3 OF LR-M-377 A

TABLE OF ADDITIONS & CHANGES

NO	DATE	DESCRIPTION	REV'D	CHK'D	APP'D
A	7/8/96	INITIAL ISSUE FOR LICENSE RENEWAL	DR	AND	EDP

LR-M-377 (SHT.3)

CATEGORY A1

D-95