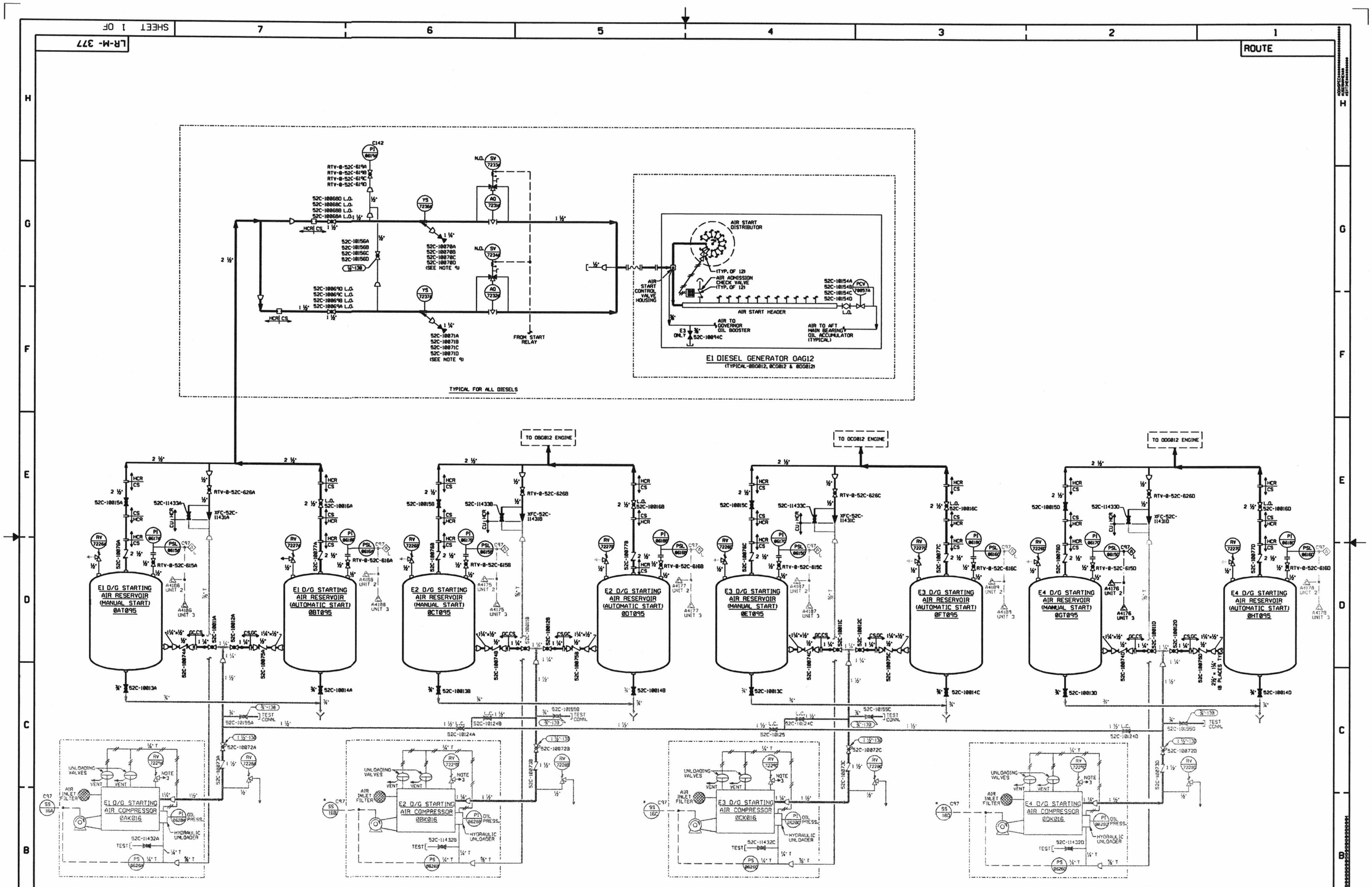

NOTES:
1. THIS DRAWING INCLUDES THE FOLLOWING LICENSE RENEWAL SYSTEMS:
   ED - EMERGENCY DIESEL GENERATOR
2. THIS DRAWING IS BASED ON P&ID M-377 SHEET 1 REV 40

THIS SHEET FOR COMMON ONLY

MECHANICAL

TABLE OF ADDITIONS & CHANGES

NO	DATE	DESCRIPTION	REV'D	CHK'D	APP'D
A		INITIAL ISSUE FOR LICENSE RENEWAL	DR	AMO	EDP

LICENSE RENEWAL DRAWING
DIESEL GENERATOR AUXILIARY SYSTEMS
(STARTING AIR SYSTEM)

PEACH BOTTOM APS UNITS 2 & 3
EXELON

SHEET 1 OF LR-M-377 A

LR-M-377 (SHT.1)

CATEGORY A1

D-93