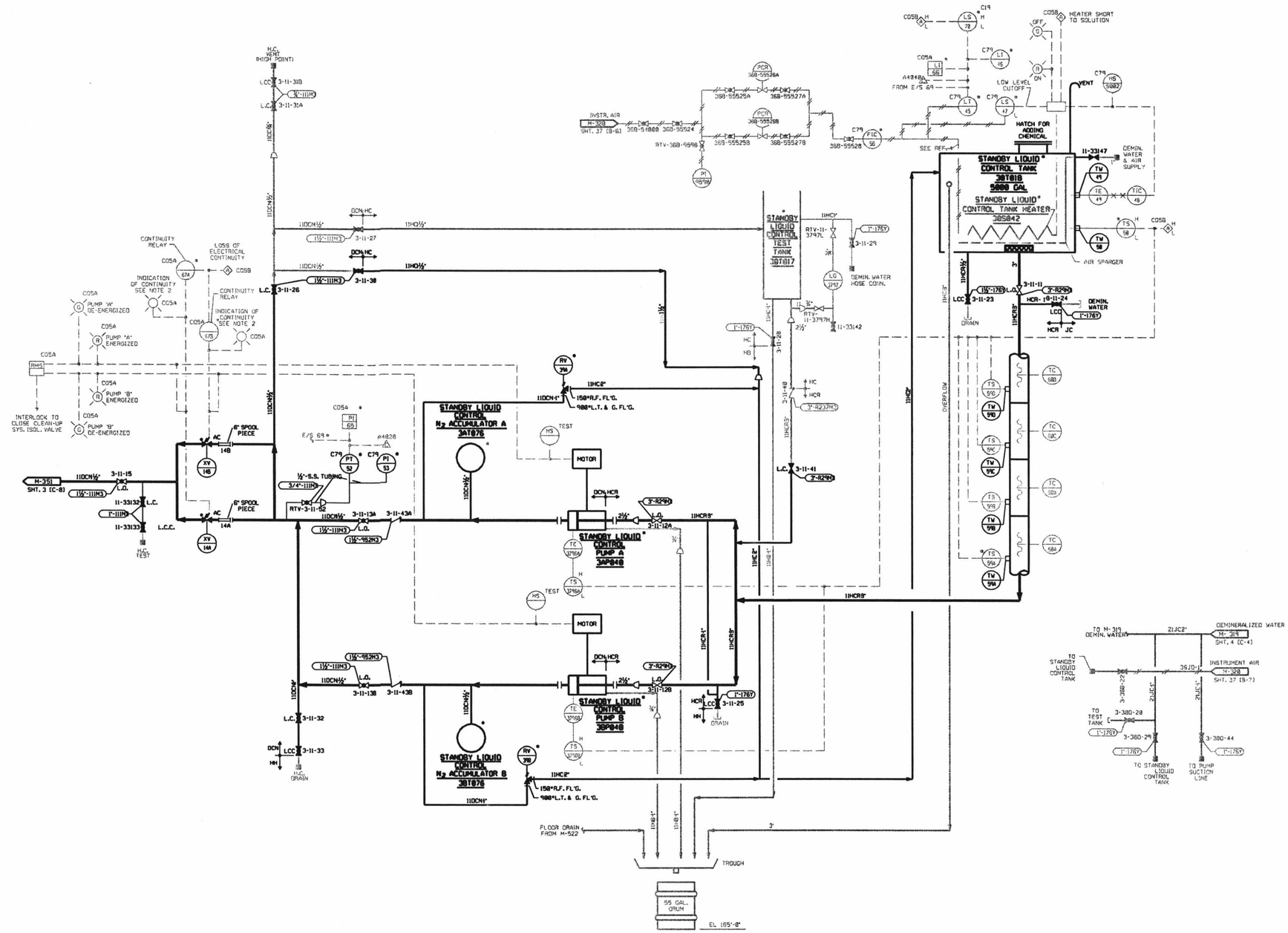

NOTES:

1. THIS DRAWING INCLUDES THE FOLLOWING LICENSE RENEWAL SYSTEMS:
   SL-STANDBY LIQUID CONTROL
2. THIS DRAWING IS BASED ON P&ID M-358 SHEET 2 REV 39

TABLE OF ADDITIONS & CHANGES					
NO	DATE	DESCRIPTION	REV'D	CHK'D	APP'D
A		INITIAL ISSUE FOR LICENSE RENEWAL	JC	A.T.L.	M.C.L.

THIS SHEET FOR UNIT 3 ONLY

MECHANICAL

LICENSE RENEWAL DRAWING
STANDBY LIQUID CONTROL SYSTEM

PEACH BOTTOM APS UNITS 2 & 3
EXELON

SHEET 2 OF LR-M-358 A

CATEGORY A1

D-60