ROUTE

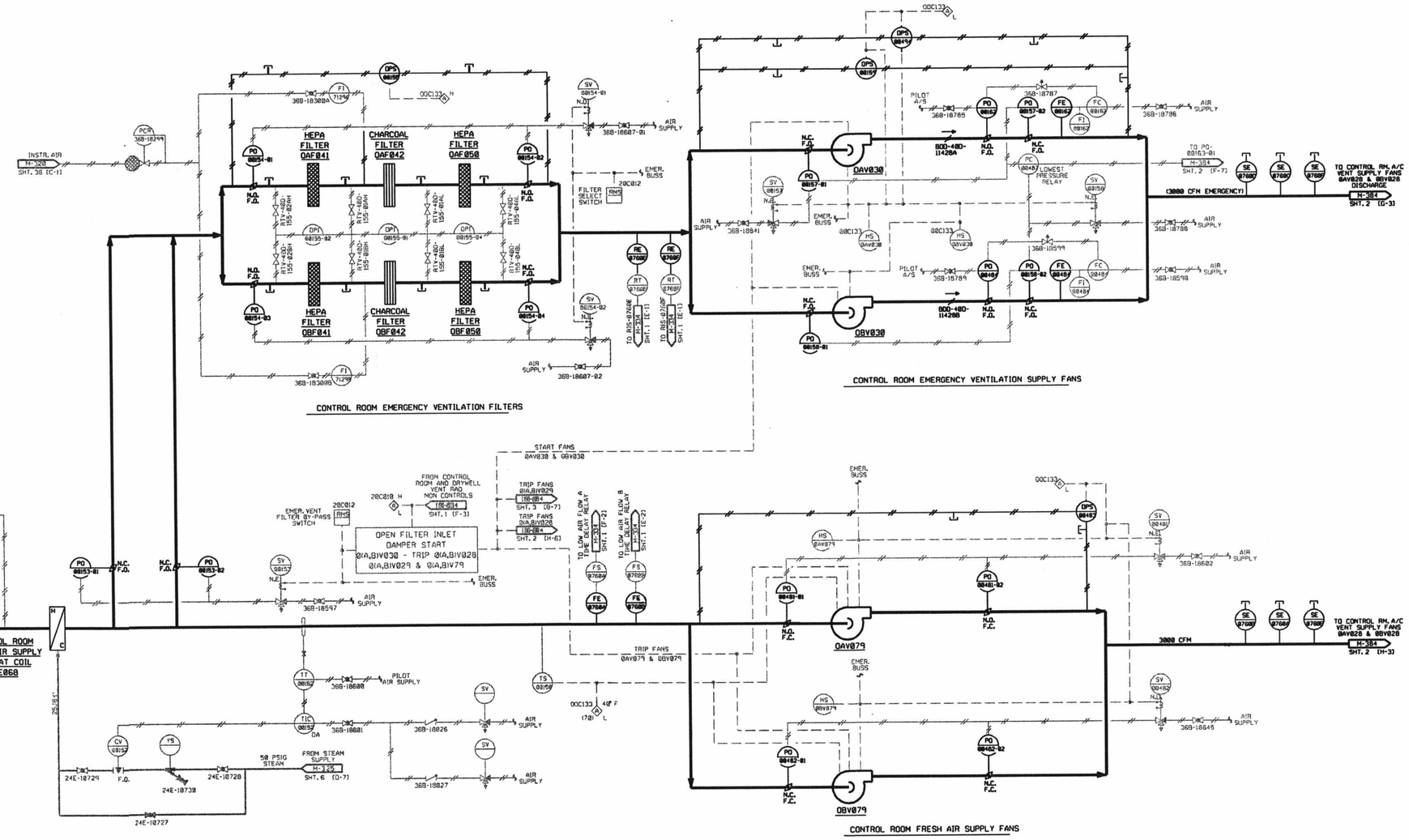

NOTES:
1. THIS DRAWING INCLUDES THE FOLLOWING LICENSE RENEWAL SYSTEMS:
   CV - CONTROL ROOM VENTILATION
2. THIS DRAWING IS BASED ON P&ID M-384 SHEET 1 REV 37.

TABLE OF ADDITIONS & CHANGES

NO	DATE	DESCRIPTION	REVD	CHKD	APPD
A		INITIAL ISSUE FOR LICENSE RENEWAL			

THIS SHEET FOR COMMON ONLY

MECHANICAL

LICENSE RENEWAL DRAWING
CONTROL ROOM HVAC

PEACH BOTTOM APS UNITS 2 & 3
EXELON

SHEET 1 OF LR-M-384 A

LR-M-384 (SHT.1)

CATEGORY A1

D-98