ROUTE

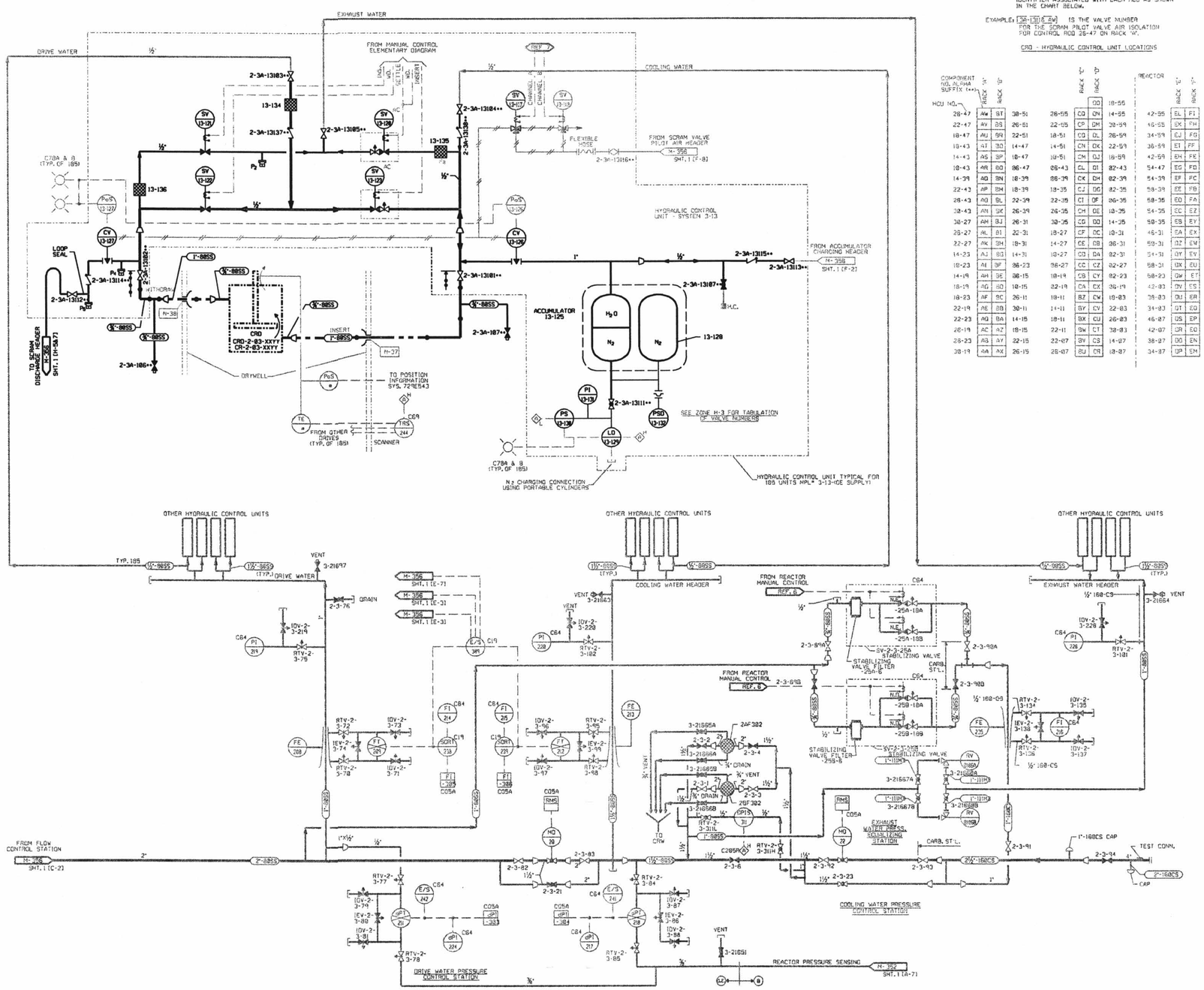

COMPONENT NUMBERS ON HCU'S

COMPONENT NUMBERS FOR CRD HCU COMPONENTS ARE IDENTICAL FOR ALL 185 UNITS EXCEPT FOR THE ALPHA SUFFIX. THIS SUFFIX BECOMES THE UNIQUE IDENTIFIER ASSOCIATED WITH EACH HCU AS SHOWN IN THE CHART BELOW.

EXAMPLE: 2A-13116-AW IS THE VALVE NUMBER FOR THE SCRAM PILOT VALVE AIR ISOLATION FOR CONTROL ROD 26-47 ON RACK 'W'.

CRD - HYDRAULIC CONTROL UNIT LOCATIONS

COMPONENT NO. ALPHA SUFFIX (**)	RACK "A"	RACK "B"	HCU NO.		RACK "C"	RACK "D"	HCU NO.		RACK "E"	RACK "F"	HCU NO.		RACK "G"	RACK "H"	HCU NO.
						CQ	18-55								
26-47	AW	BT	38-51	26-55	CQ	CN	14-55	42-55	EL	FI	26-55	34-51	GF	HC	38-47
22-47	AV	BS	26-51	22-55	CP	CM	26-59	46-55	EK	FH	34-55	38-51	GE	HB	34-47
18-47	AU	BR	22-51	18-51	CO	CL	26-59	34-59	EJ	FG	38-55	42-51	GD	HA	38-47
18-43	AT	BQ	14-47	14-51	CN	CK	22-59	38-59	EI	FF	46-47	46-51	GC	JZ	42-47
14-43	AS	BP	18-47	10-51	CM	CJ	18-59	42-59	EH	FE	50-47	50-51	GB	CY	46-43
10-43	AR	BO	06-47	06-43	CL	CI	02-43	54-47	EG	FD	58-43	54-43	GA	GX	50-43
14-39	AQ	BN	18-39	06-39	CK	CH	02-39	54-39	EF	FC	58-39	42-39	FZ	GW	46-39
22-43	AP	BM	18-39	10-35	CJ	CG	02-35	58-39	EE	FB	46-35	38-39	FY	GV	42-43
26-43	AO	BL	22-39	22-35	CI	CF	06-35	58-35	ED	FA	42-35	34-39	FX	GU	38-43
30-43	AN	BK	26-39	26-35	CH	CE	10-35	54-35	EC	EZ	38-35	30-39	FW	GT	34-43
30-47	AM	BJ	26-31	30-35	CG	CD	14-35	50-35	EB	EY	34-35	30-31	FV	GS	34-47
26-47	AL	BI	22-31	30-27	CF	CC	10-31	46-31	EA	EX	30-27	34-31	FU	GR	38-47
22-47	AK	BH	18-31	14-27	CE	CB	06-31	50-31	DZ	EW	34-27	38-31	FT	GQ	42-47
14-23	AJ	BG	14-31	10-27	CD	CA	02-31	54-31	DY	EV	38-27	42-31	FS	GP	42-23
10-23	AI	BF	06-23	06-27	CC	CZ	02-27	58-31	DX	EU	54-23	46-27	FR	GO	46-23
14-19	AH	BE	06-15	10-19	CB	CY	02-23	58-23	DW	ET	58-19	54-19	FQ	GN	50-23
18-19	AG	BD	10-15	22-19	CA	CX	06-19	42-03	DV	ES	54-15	46-15	FP	GM	46-19
18-23	AF	BC	26-11	18-11	BZ	CW	18-03	38-03	DU	ER	50-15	34-11	FO	GL	42-19
22-19	AE	BB	30-11	14-11	BY	CV	22-03	34-03	DT	EQ	50-11	50-19	FN	GK	38-23
22-23	AD	BA	14-15	18-11	BX	CU	26-03	46-07	DS	EP	46-11	42-15	FM	GJ	38-19
26-19	AC	AZ	18-15	22-11	BW	CT	30-03	42-07	DR	EO	42-11	38-15	FL	GI	34-23
26-23	AB	AY	22-15	22-07	BV	CS	14-07	38-07	DQ	EN	38-11	34-15	FK	GH	34-19
30-19	AA	AX	26-15	26-07	BU	CR	18-07	34-07	DP	EM	30-07	30-15	FJ	GG	38-23

NOTES:

1. THIS DRAWING INCLUDES THE FOLLOWING LICENSE RENEWAL SYSTEMS:

   CR - CONTROL ROD DRIVE

2. THIS DRAWING IS BASED ON P&ID M-357 SHEET 1 REV 34.

TABLE OF ADDITIONS & CHANGES

NO	DATE	DESCRIPTION	REV'D	CHK'D	APP'D
A		INITIAL ISSUE FOR LICENSE RENEWAL	RJD	AJB	PCDR

THIS SHEET FOR UNIT 2

MECHANICAL

LICENSE RENEWAL DRAWING
CONTROL ROD DRIVE
HYDRAULIC SYSTEM - PART B

PEACH BOTTOM APS UNITS 2 & 3
EXELON

SHEET 1 OF LR-M-357 A

CATEGORY A1

LR-M-357 (SHT.1)

D-57