ROUTE

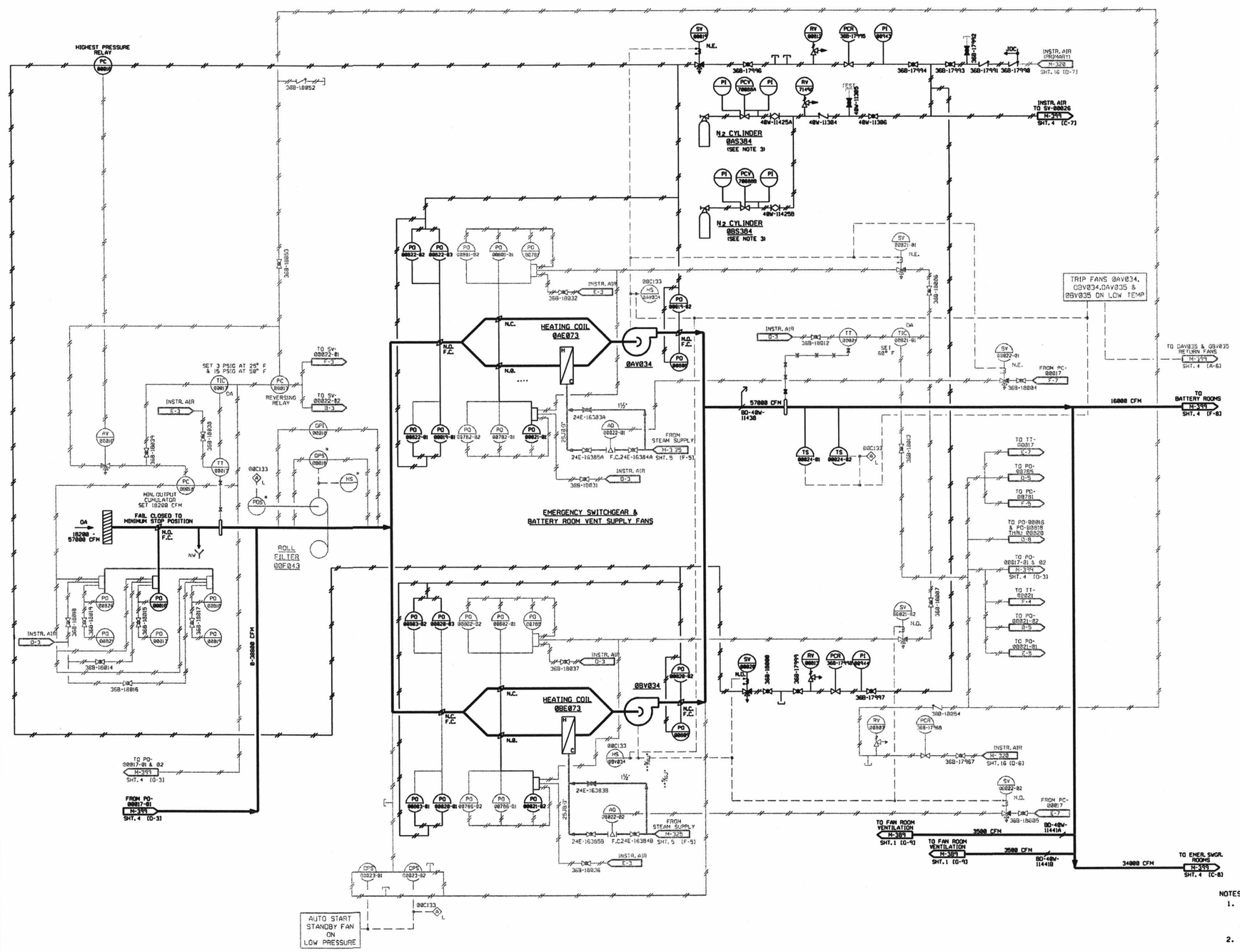

NOTES:

1. THIS DRAWING INCLUDES THE FOLLOWING LICENSE RENEWAL SYSTEMS:
   BV - BATTERY AND EMERGENCY SWITCHGEAR VENTILATION
2. THIS DRAWING IS BASED ON P&ID M-399 SHEET 1 REV 32.
3. INSTRUMENT GAS BOTTLES CONFORM TO DOT STANDARDS, TITLE 49, SECTION 178-37, SPECIFICATION 3AA.

TABLE OF ADDITIONS & CHANGES					
NO	DATE	DESCRIPTION	REV'D	CHK'D	APP'D
A		INITIAL ISSUE FOR LICENSE RENEWAL			

THIS SHEET FOR COMMON ONLY

MECHANICAL

LICENSE RENEWAL DRAWING
EMERGENCY SWITCHGEAR, BATTERY ROOM, LABORATORY SUPPLY & EXHAUST

PEACH BOTTOM APS UNITS 2 & 3
EXELON

SHEET 1 OF LR-M-399 A

CATEGORY A1

D-108

LR-M-399 (SHT.1)