ROUTE

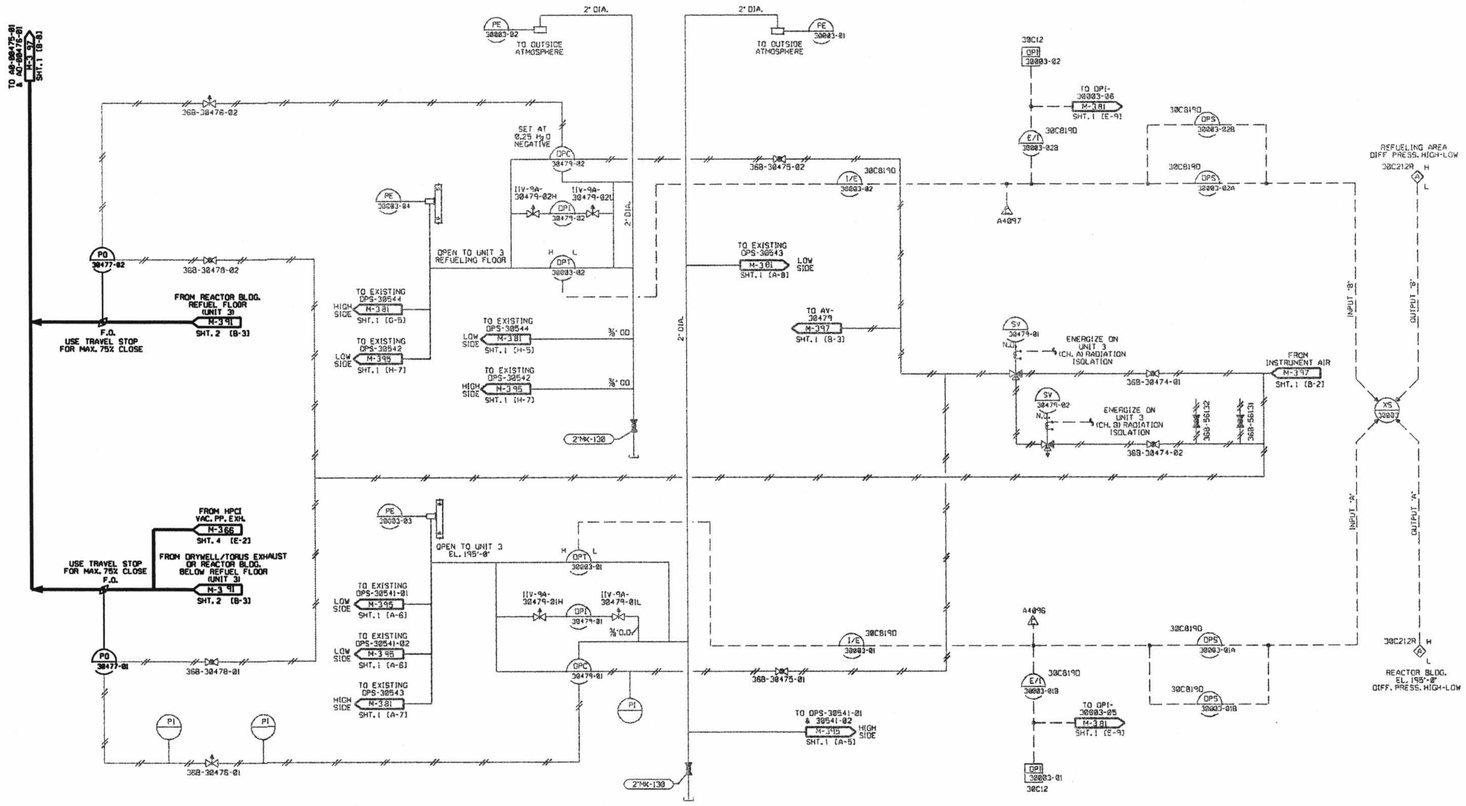

NOTES:

1. THIS DRAWING INCLUDES THE FOLLOWING LICENSE RENEWAL SYSTEMS:

   SG - STANDBY GAS TREATMENT

2. THIS DRAWING IS BASED ON P&ID M-397 SHEET 3 REV 3.

TABLE OF ADDITIONS & CHANGES						
NO	DATE	DESCRIPTION	REVD	CKD	DWD	APPD
A	4/97	INITIAL ISSUE FOR LICENSE RENEWAL	RCD	MCK	MDW	PCW

THIS SHEET FOR UNIT 3 ONLY

MECHANICAL

LICENSE RENEWAL DRAWING
STANDBY GAS TREATMENT
CONTROL DIAGRAM

PEACH BOTTOM APS UNITS 2 & 3
EXELON

SHEET 3 OF | LR-M-397 | A

LR-M-397 (SHT.3)

CATEGORY A1

D-107