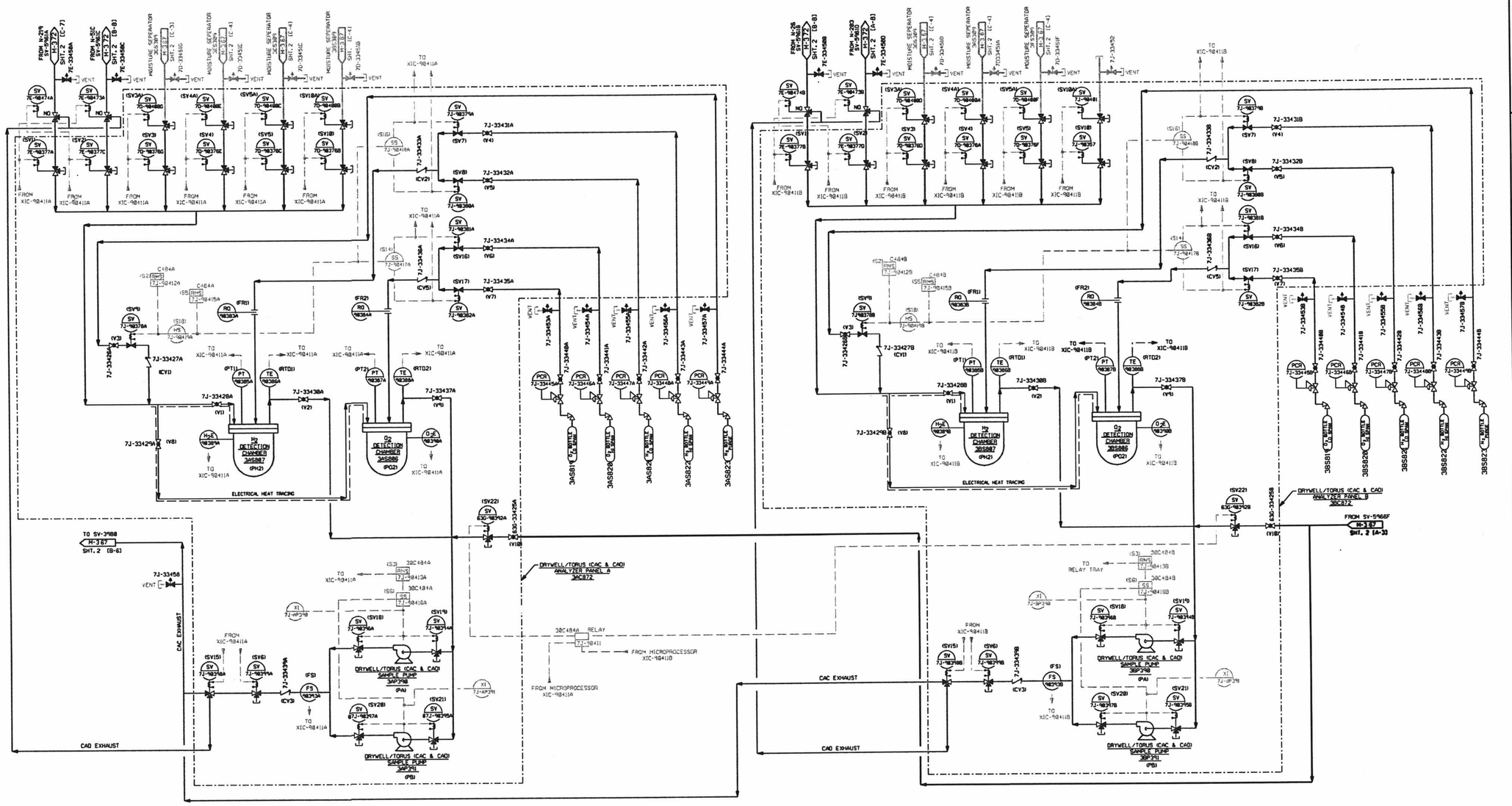

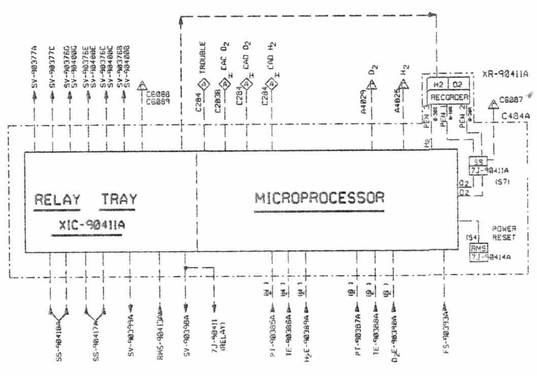

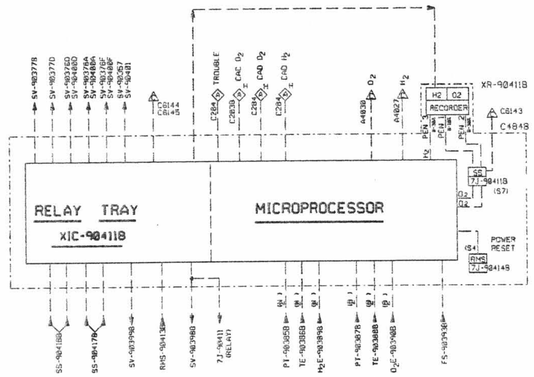

NOTES:

1. THIS DRAWING INCLUDES THE FOLLOWING LICENSE RENEWAL SYSTEMS:
   CD - CONTAINMENT ATMOSPHERE CONTROL AND DILUTION
2. THIS DRAWING IS BASED ON P&ID M-372 SHEET 4 REV 2.

TABLE OF ADDITIONS & CHANGES						
NO	DATE	DESCRIPTION	REVD	DWN	CHKD	APPD
A		INITIAL ISSUE FOR LICENSE RENEWAL				

THIS SHEET FOR UNIT 3 ONLY

MECHANICAL

LICENSE RENEWAL DRAWING
CONTAINMENT ATMOSPHERE
DILUTION SYSTEM

PEACH BOTTOM APS UNITS 2 & 3
EXELON

SHEET 4 OF LR-M-372 A

CATEGORY A1

D-89