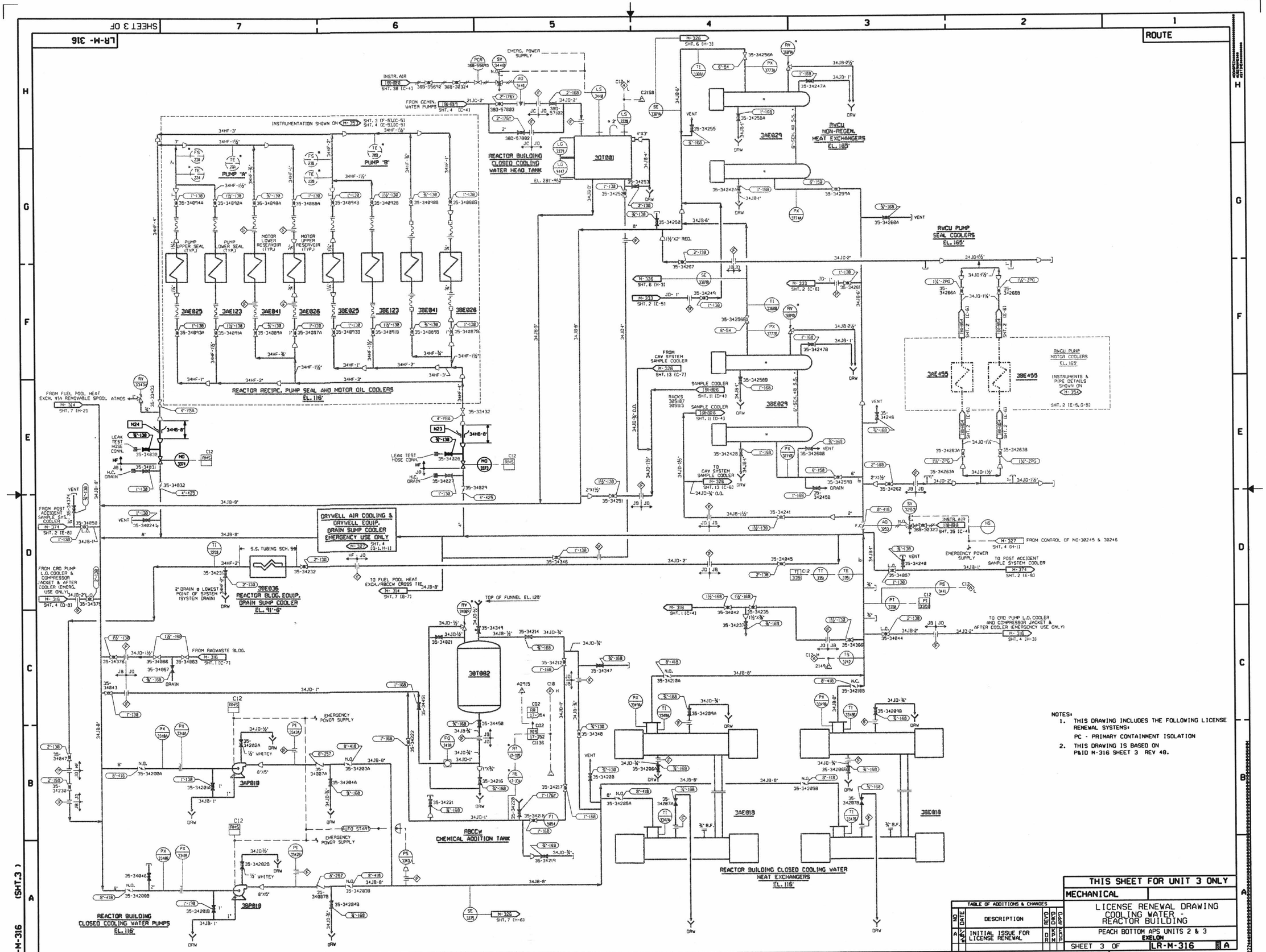

NOTES:

1. THIS DRAWING INCLUDES THE FOLLOWING LICENSE RENEWAL SYSTEMS:
   PC - PRIMARY CONTAINMENT ISOLATION
2. THIS DRAWING IS BASED ON P&ID M-316 SHEET 3 REV 48.

TABLE OF ADDITIONS & CHANGES							
NO	DATE	DESCRIPTION	DRN	CHKD	ENG	CHK	APPD
A		INITIAL ISSUE FOR LICENSE RENEWAL					

THIS SHEET FOR UNIT 3 ONLY

MECHANICAL

LICENSE RENEWAL DRAWING
COOLING WATER -
REACTOR BUILDING

PEACH BOTTOM APS UNITS 2 & 3
EXELON

SHEET 3 OF LR-M-316 A

CATEGORY A1

D-23