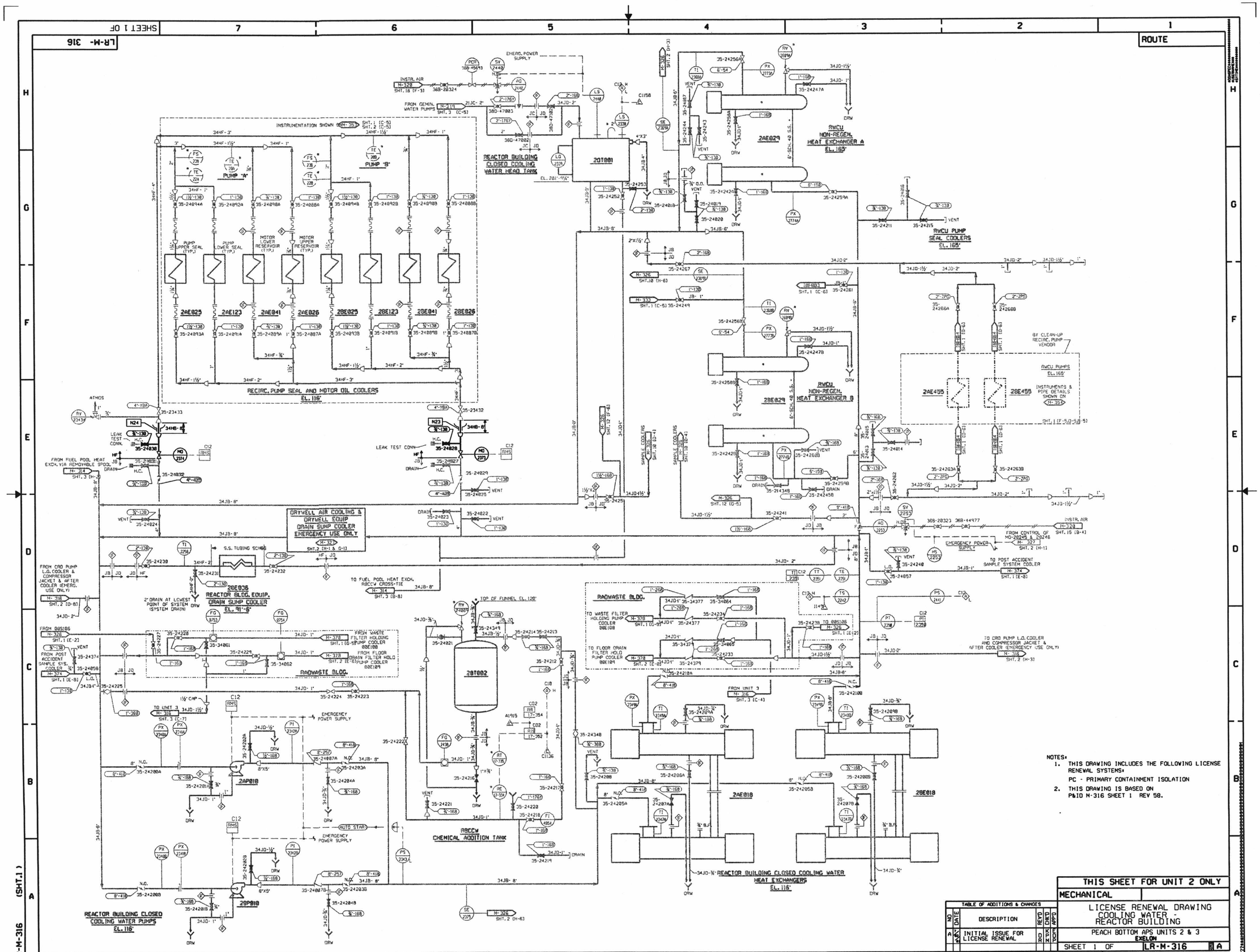

NOTES:

1. THIS DRAWING INCLUDES THE FOLLOWING LICENSE RENEWAL SYSTEMS:
   PC - PRIMARY CONTAINMENT ISOLATION
2. THIS DRAWING IS BASED ON P&ID M-316 SHEET 1 REV 58.