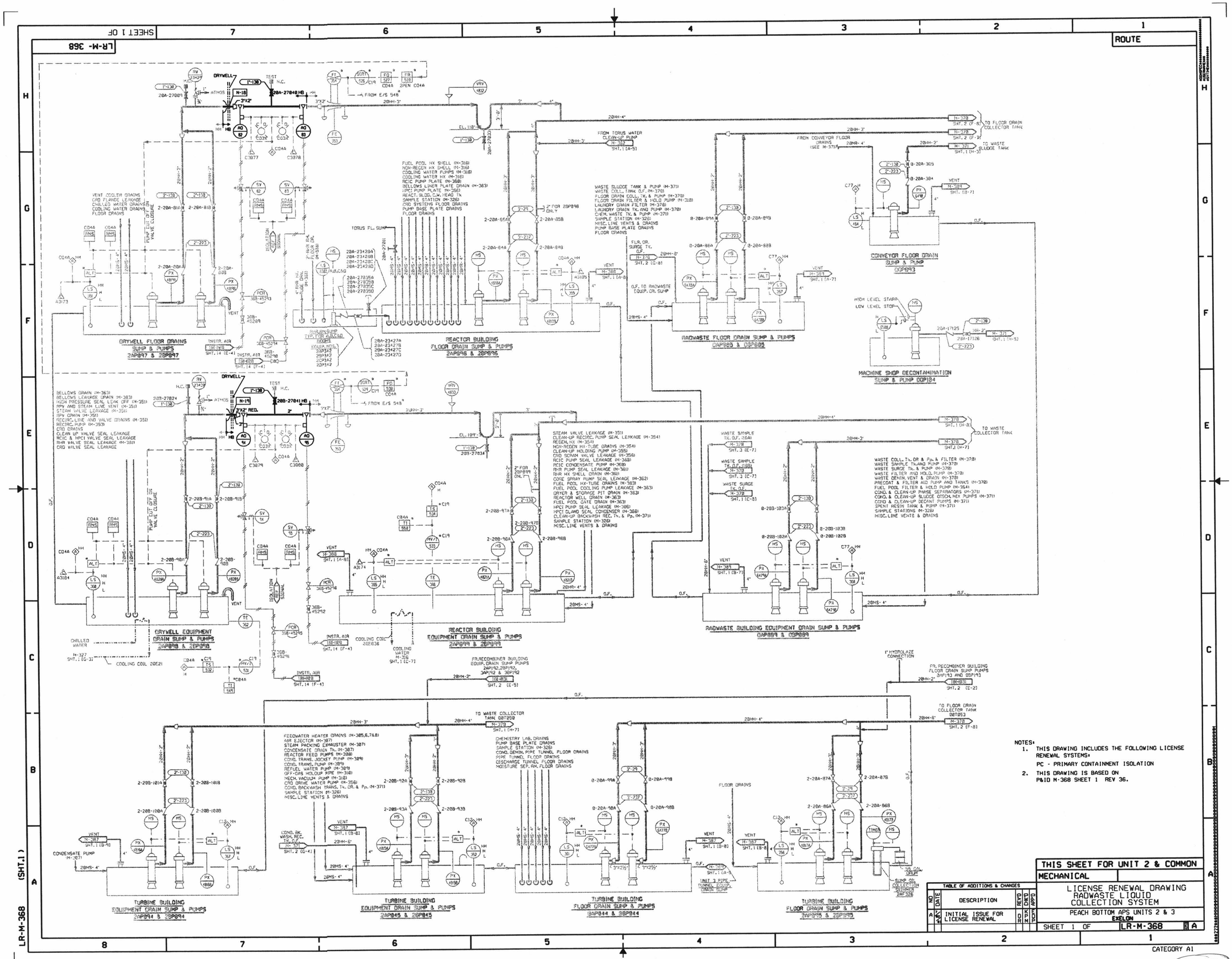

NOTES:
1. THIS DRAWING INCLUDES THE FOLLOWING LICENSE RENEWAL SYSTEMS:
   PC - PRIMARY CONTAINMENT ISOLATION
2. THIS DRAWING IS BASED ON P&ID M-368 SHEET 1 REV 36.

TABLE OF ADDITIONS & CHANGES

NO	DATE	DESCRIPTION	REV'D	CHK'D	APP'D
A	2/6/84	INITIAL ISSUE FOR LICENSE RENEWAL	DR	KPM	KPP

THIS SHEET FOR UNIT 2 & COMMON

MECHANICAL

LICENSE RENEWAL DRAWING
RADWASTE LIQUID COLLECTION SYSTEM

PEACH BOTTOM APS UNITS 2 & 3
EXELON

SHEET 1 OF LR-M-368 A

CATEGORY A1

D-84