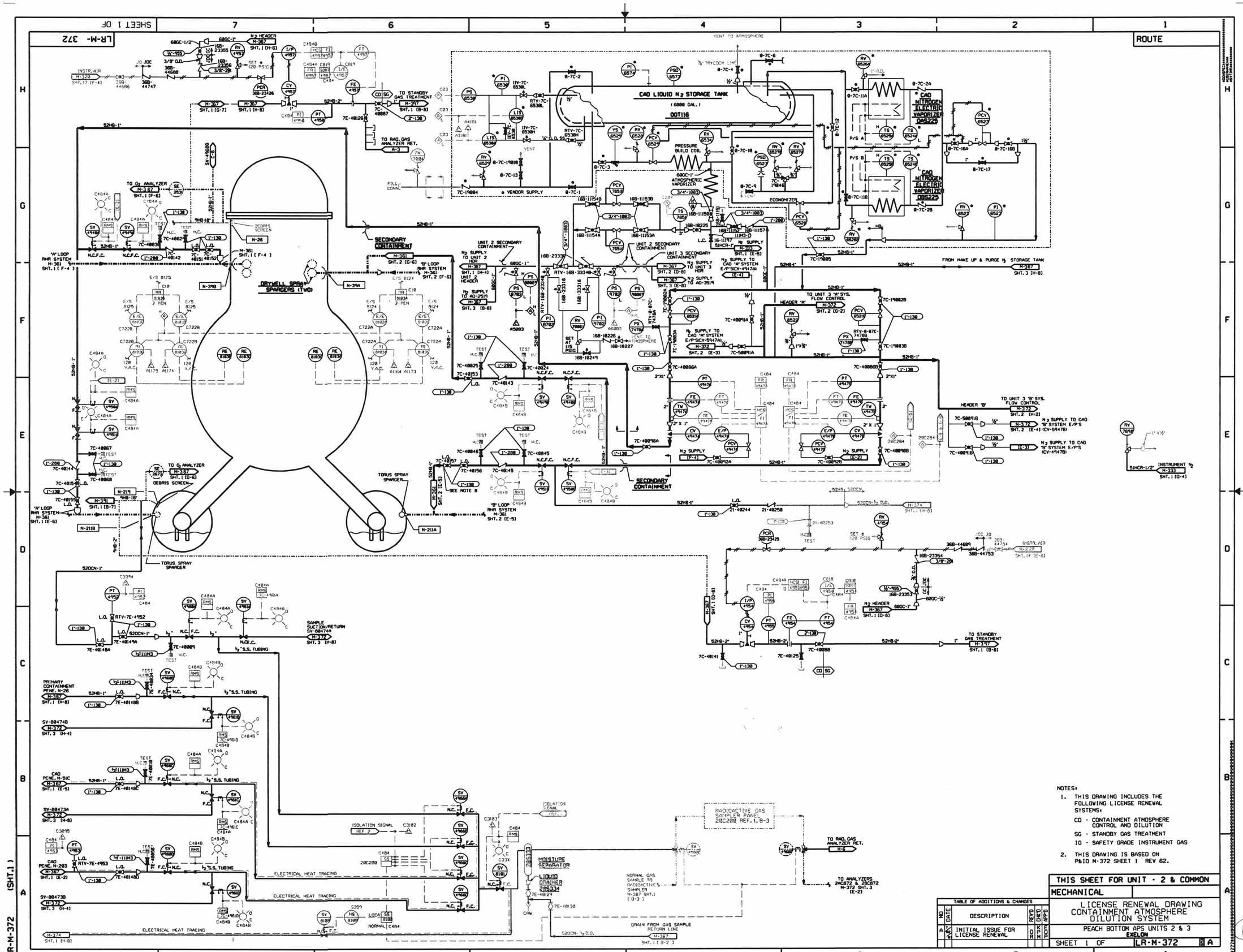

NOTES:

1. THIS DRAWING INCLUDES THE FOLLOWING LICENSE RENEWAL SYSTEMS:
   - CD - CONTAINMENT ATMOSPHERE CONTROL AND DILUTION
   - SG - STANDBY GAS TREATMENT
   - IG - SAFETY GRADE INSTRUMENT GAS
2. THIS DRAWING IS BASED ON P&ID M-372 SHEET 1 REV 62.

THIS SHEET FOR UNIT - 2 & COMMON

MECHANICAL

LICENSE RENEWAL DRAWING
CONTAINMENT ATMOSPHERE
DILUTION SYSTEM

PEACH BOTTOM APS UNITS 2 & 3
EXELON

SHEET 1 OF LR-M-372 A

TABLE OF ADDITIONS & CHANGES

NO	DATE	DESCRIPTION	REV'D	CHK'D	APP'D
A	7/6/94	INITIAL ISSUE FOR LICENSE RENEWAL	DR	KPN	FDP

D-86

CATEGORY A1