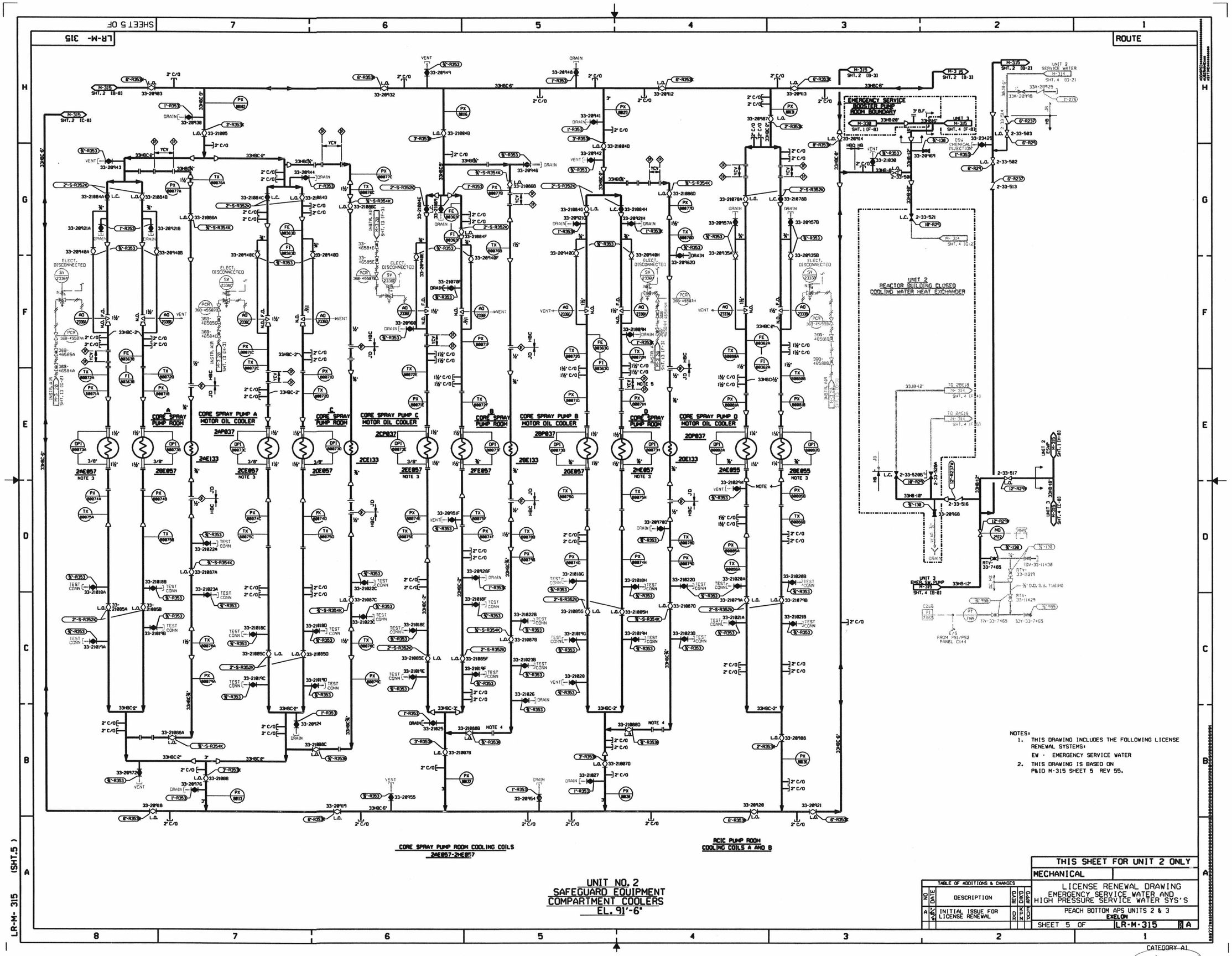

NOTES:
1. THIS DRAWING INCLUDES THE FOLLOWING LICENSE RENEWAL SYSTEMS:
   EW - EMERGENCY SERVICE WATER
2. THIS DRAWING IS BASED ON P&ID M-315 SHEET 5 REV 55.

THIS SHEET FOR UNIT 2 ONLY

MECHANICAL

TABLE OF ADDITIONS & CHANGES

NO	DATE	DESCRIPTION	REV'D	CHK'D	APP'D
A	7/6/84	INITIAL ISSUE FOR LICENSE RENEWAL	DR	KPM	EDP

LICENSE RENEWAL DRAWING
EMERGENCY SERVICE WATER AND HIGH PRESSURE SERVICE WATER SYS'S

PEACH BOTTOM APS UNITS 2 & 3
EXELON

SHEET 5 OF LR-M-315 A

CATEGORY A1

D-21